Appendix B

--This page left intentionally blank--

Appendix B
Engineering Drawings

- **Figure B-1** General Electric 1.5sle Wind Energy Turbine
- **Figure B-2** Main Components of a Typical Wind Turbine
- **Figure B-3** Typical Crane Pad Layout
- **Figure B-4** Typical Layout for a Turbine Apron Plan
- **Figure B-5** Crow Lake Alternative Collector Substation Layout & Electrical Bus Arrangement

--This page left intentionally blank--

Figure B-1

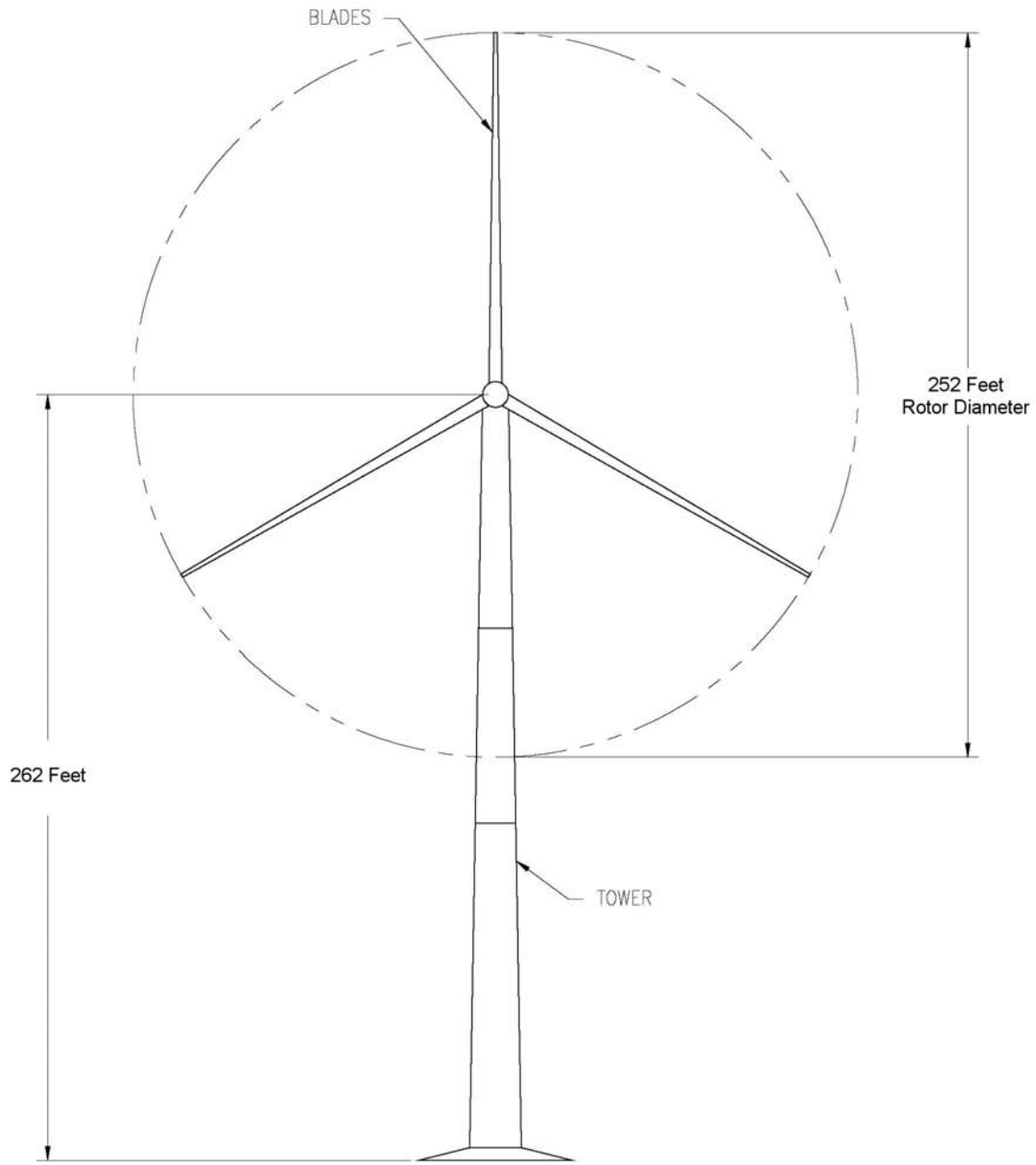

GE WIND ENERGY 1.5 SLE 60 HZ WIND TURBINE

Figure B-2

3 Major Components of Turbines

Generator

Gearbox

Rotor/Blades/Main Shaft

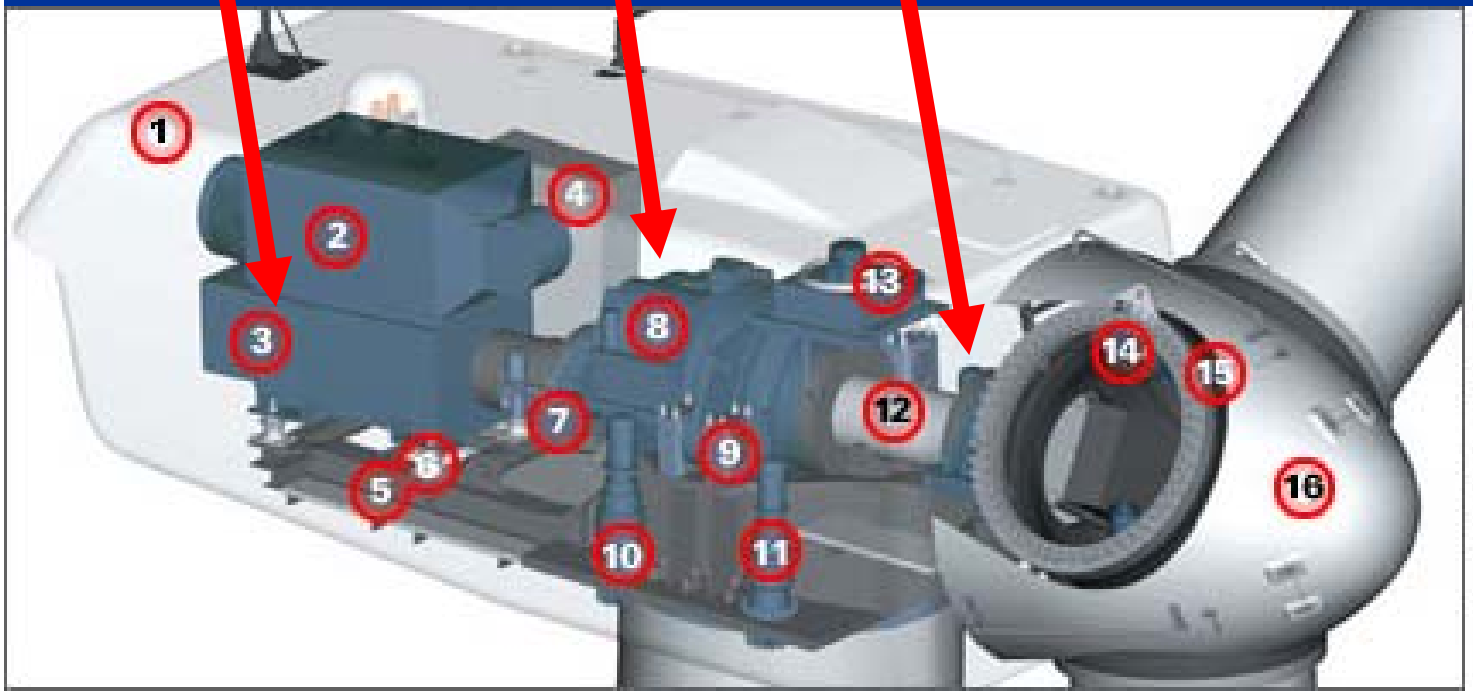

1. Nacelle
2. Heat Exchanger
3. Generator
4. Control Panel
5. Main Frame
6. Impact Noise Insulation
7. Hydraulic Parking Brake
8. Gearbox
9. Impact Noise Insulation
10. Yaw Drive
11. Yaw Drive
12. Rotor Shaft
13. Oil Cooler
14. Pitch Drive
15. Rotor Hub
16. Nose Cone

Figure B-3

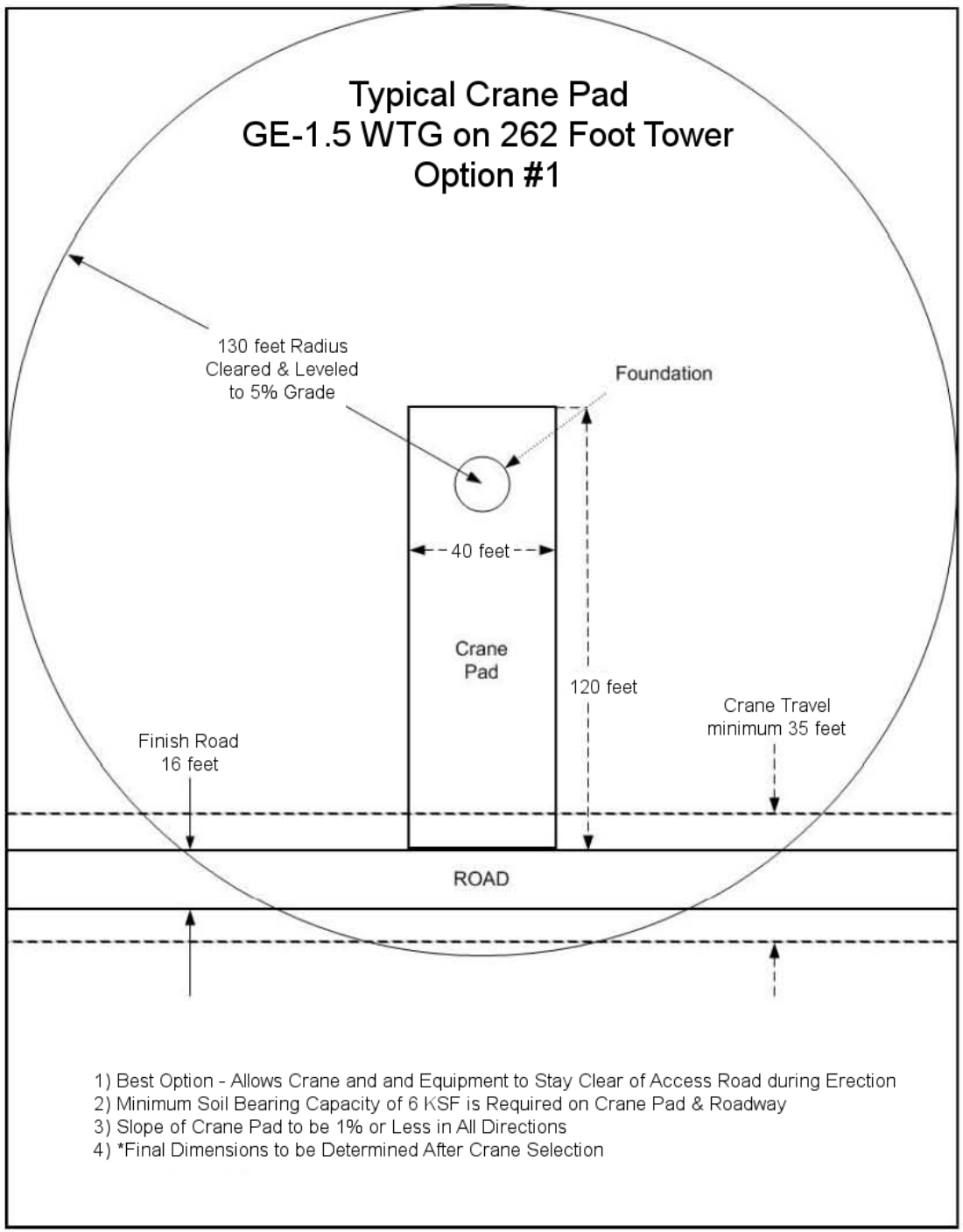

Typical Crane Pad Option 1

Figure B-4

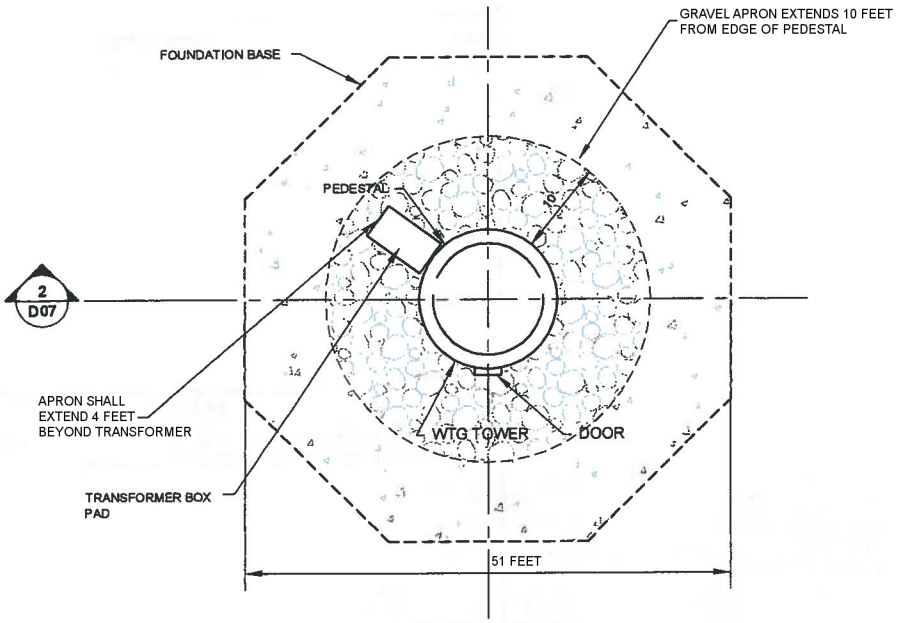

TURBINE APRON PLAN VIEW

1 / D07

(NOT TO SCALE)

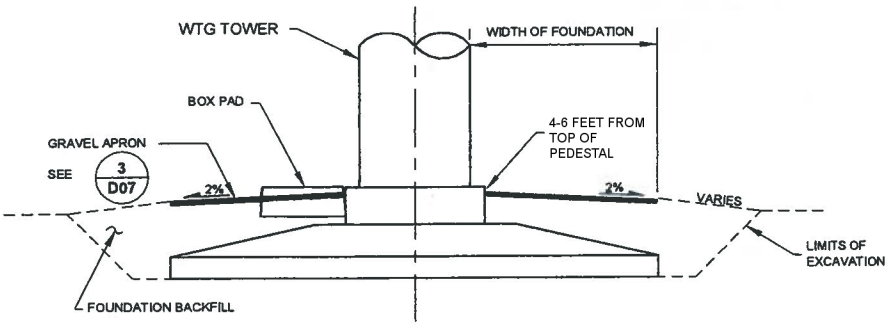

TURBINE APRON PROFILE VIEW

2 / D07

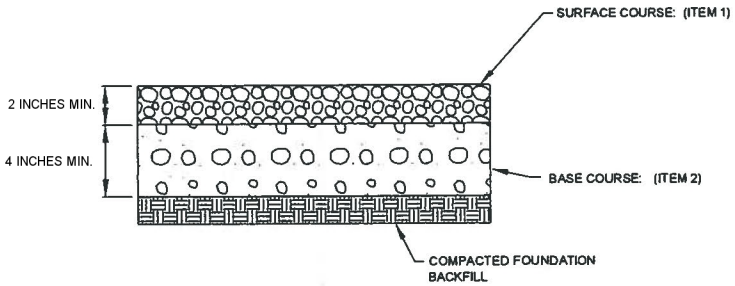

GRAVEL APRON CROSS SECTION

3 / D07

(NOT TO SCALE)

Figure B-5

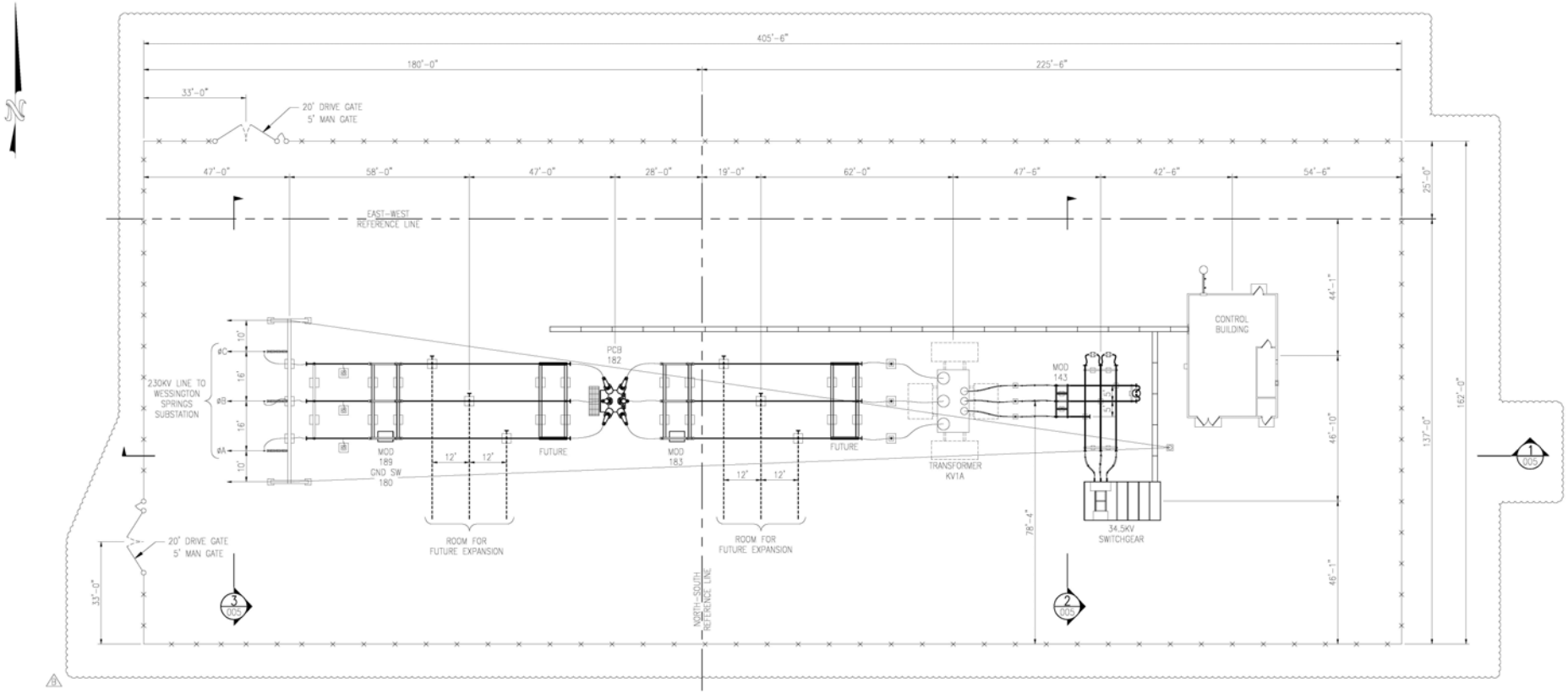

ELECTRICAL BUS ARRANGEMENT

TYPES OF CONNECTIONS

F FIXED
S SLIP
EX EXPANSION

BEPC SUBMITTAL REVIEW

( ) NO EXCEPTION NOTED-PROCEED
( ) PROCEED AS NOTED, MAKE CORRECTION AND RESUBMIT
( ) REVISE AND RESUBMIT FOR APPROVAL BEFORE PROCEEDING

BY _____ DATE _____

TO BE COMPLETED OR VERIFIED:

1. PCB SIZE
2. XFMR SIZE
4. CABLE TRENCH SIZE

PRELIMINARY

REV.	DESCRIPTION	DRWN	DSGN	APPD	DATE
B	REVISED PER BEPC COMMENTS	M.KAVANAGH	E.SWENSON	–	6/12/09
A	ISSUED FOR REVIEW	M.KAVANAGH	E.SWENSON	–	5/4/09

REFERENCE DRAWINGS

BASIN DRAWING NUMBER	
443-054-E3-003	230KV ELECTRICAL LAYOUT PLAN
443-054-E3-004	34.5KV ELECTRICAL LAYOUT PLAN
443-054-E3-005	34.5/230KV ELECTRICAL LAYOUT ELEVATIONS
443-054-E4-001	34.5KV & 230KV ELEC. LAYOUT DETAILS SH. 1 OF 2
443-054-E4-002	34.5KV & 230KV ELEC. LAYOUT DETAILS SH. 2 OF 2

FACILITY: TRANSMISSION SYSTEM MAINTENANCE
LOCATION/PLANT: 443-34.5/230KV CROW LAKE COLLECTOR SUBSTATION
CONTRACT/DESIGNATION:

ELECTRICAL BUS ARRANGEMENT

BASIN ELECTRIC POWER COOPERATIVE
A Touchstone Energy® Cooperative

DSGN BY: E.SWENSON 3/09
DRWN BY: M.KAVANAGH 3/09
DSGN CK:
DWT CK:
APPROVED:
SCALE: 1/16" = 1'-0"
VENDOR/ORIGINATED FROM: ULTEIG
VENDOR DRAWING NO. ORIGINAL REV.

BASIN DRAWING NO. 443-054-E3-001 REV. NO. B

--This page left intentionally blank--