Western AREA POWER ADMINISTRATION

SECTION C
DESCRIPTION/SPECIFICATIONS

Spec. No. 883

PROJECT DRAWINGS

GILA-KNOB 230KV TRANSMISSION LINE REBUILD
PHASE I (STRUCTURES 4/7 TO 5/2)

Existing Gila-Knob structure 4/8, looking south

ARIZONA

SAFETY A HABIT TO LIVE BY

GILA-KNOB 230kV TRANSMISSION LINE REBUILD
PHASE 1, (STRUCTURES 4/7 TO 5/2)
PROJECT DRAWINGS

A. GENERAL:

CONSTRUCTION STANDARD DRAWINGS: A complete set of standard drawings are available at https://www.wapa.gov/DoingBusiness/SellingToWestern/Pages/what-western-buys.aspx.
Construction drawings are the specification drawings and any additional drawings required for use in construction. The construction drawings will be issued after contract award and may include amendment changes and other details, which make the drawings suitable to use for construction purposes.

PROJECT DRAWINGS: Project drawings included herein are reduced reproductions and are not to scale. Some project drawings show details of fabrication and other information not a part of the work. Disregard information and details, which are not applicable.

STANDARD DRAWINGS: Where details shown on standard drawings included herein differ from project drawings or text, the details of project drawings or text shall govern.

INFORMATIONAL DRAWINGS: Some project drawings have the words “FOR INFORMATION ONLY” appearing above the title block. These drawings show some information, which may be required for bidding purposes. These drawings do not show items to be furnished or work to be performed.

EXISTING INSTALLATION DRAWINGS: Some project drawings have the words “EXISTING INSTALLATION” appearing above the title block. These drawings show the existing installations prior to modifications and may show some new work to be performed.

REFERENCE DRAWINGS: Reference drawings referred to on project drawings and not included herein, are not necessary for bidding purposes.

CONTRACTOR'S RESPONSIBILITY: Check all drawings and advise Western of any errors or omissions.

B. LIST OF DRAWINGS:

LOCATION MAP:

1. GLA 0015 Rev. C – Location and Vicinity Map

EXISTING TRANSMISSION LINE STRUCTURES FOR REMOVAL:

2. 41 6006 REV. B (FIO) – Type HS 138KV and 161KV Suspension Structure (For Information Only)
3. 41 6013 REV. E (FIO) – Type 3A 138, 161, and 230KV Medium Angle Structure (For Information Only)
4. 41 6017 (FIO) – Type 3T 138KV and 161KV 3-Pole Tension Structure (For Information Only)

TRANSMISSION LINE PLAN AND PROFILES:

5. GLA-KNB T400 – Plan and Profile (FIO) (For Information Only)
6. GLA-KNB 4207 REV. A – Plan and Profile STR. 4/7 to STR. 5/2
7. GLA-KNB 4208 REV. A – Plan and Profile STR. 4/8R to STR. 4/10R

TRANSMISSION LINE ELECTRICAL:

8. GLA-KNB 1004 – Material Quantities
9. GLA-KNB 1005 – Vibration Dampers

TRANSMISSION LINE STEEL POLE STRUCTURE FOUNDATIONS:

10. GLA-KNB 2101 Rev. A – Type 266M Steel Pole Structures Foundations
11. GLA-KNB 2102 – Type 281N & 281S Steel Pole Structures Foundations

TRANSMISSION LINE STEEL POLE STRUCTURES:

12. 43 266M 2200 – 266M Pole Structures Outline and Design Loads
13. 43 281N 2200 Rev. A – 281N Steel Pole Structures Outline and Design Loads
14. 43 281S 2200 – 281S Pole Structures Outline and Design Loads
15. 43 2206 Rev. H – Maintenance Provisions Outlines
16. 43 2207 Rev. G – Maintenance Provisions Outlines
17. 43 2208 Rev. H – Maintenance Provisions Outlines
18. 43 2210 Rev. I – Maintenance Provisions Details
19. 41 9027 Rev. E – Aerial Patrol Mile Marker and Structure Number Signs
20. 41 2701 Rev. A – Fall Protection Anchorage Plates

GEOLOGY:

21. GLA-GNB 8000 – Site Plan and Boring Locations
22. GLA-GNB 8001 – Boring Log No. B-1 (Page 1 of 2)
23. GLA-GNB 8002 – Boring Log No. B-1 (Page 2 of 2)
24. GLA-GNB 8003 – Boring Log No. B-2 (Page 1 of 2)
25. GLA-GNB 8004 – Boring Log No. B-2 (Page 2 of 2)
26. GLA-GNB 8005 – Boring Log No. B-3 (Page 1 of 2)
27. GLA-GNB 8006 – Boring Log No. B-3 (Page 2 of 2)
28. GLA-GNB 8007 – Boring Log No. B-4 (Page 1 of 2)
29. GLA-GNB 8008 – Boring Log No. B-4 (Page 2 of 2)

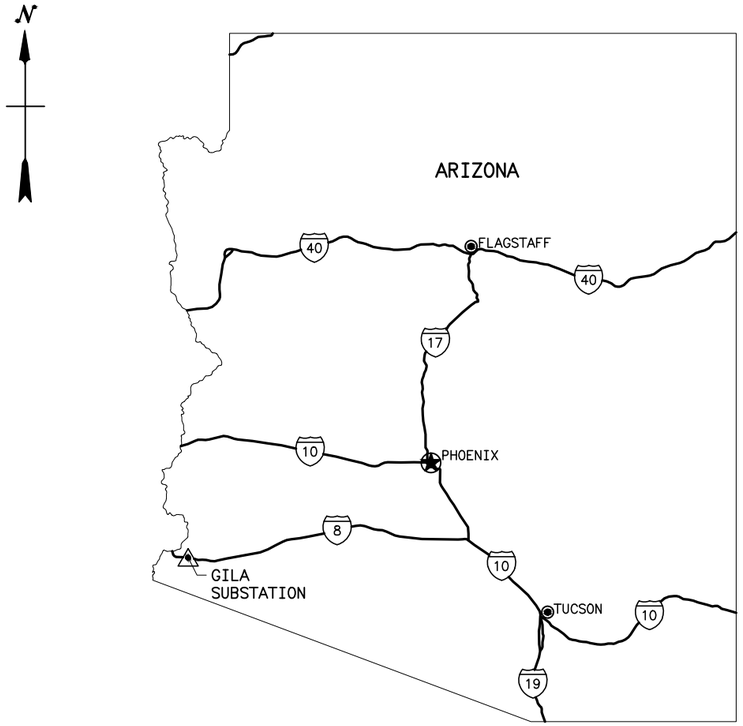

LOCATION MAP
NTS

DIRECTIONS

FROM YUMA ARIZONA:
- HEAD EAST ON US-95N 8.8 MILES
- TURN RIGHT (SOUTH) ONTO S AVE 9 E 1.2 MILES
- TURN LEFT (EAST) ONTO ARABY BLAISDELL RD 0.5 MILES
- SUBSTATION WILL BE ON THE LEFT (NORTH) JUST PAST GILA GRAVITY CANAL BANK RD

LATITUDE/LONGITUDE

32° 41' 3.482"N, 114° 28' 4.982"W (NAD 83)

PHONE NUMBERS

AMBULANCE:
YUMA 1.928.782.4757
FIRE DEPARTMENT:
YUMA 1.928.373.4850
SHERIFF:
YUMA COUNTY 1.928.783.4427
POLICE DEPARTMENT:
YUMA 1.928.373.4700

911 SERVICE UNKNOWN

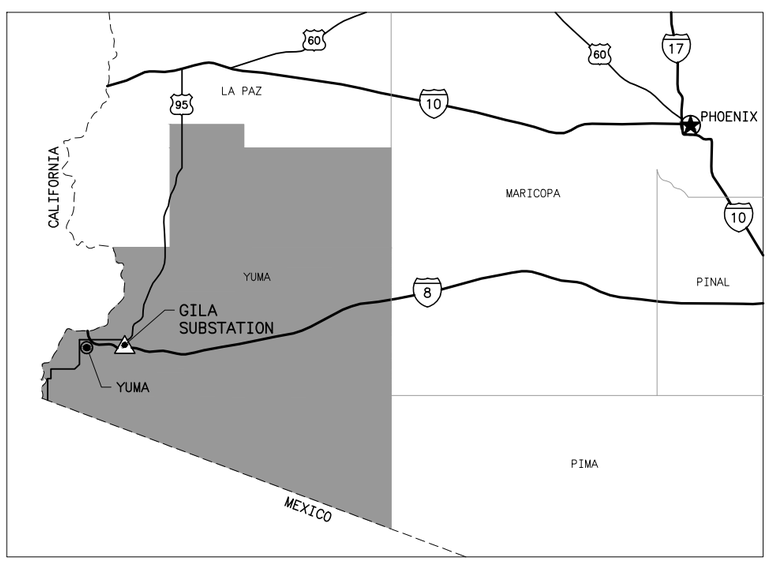

COUNTY MAP
NTS

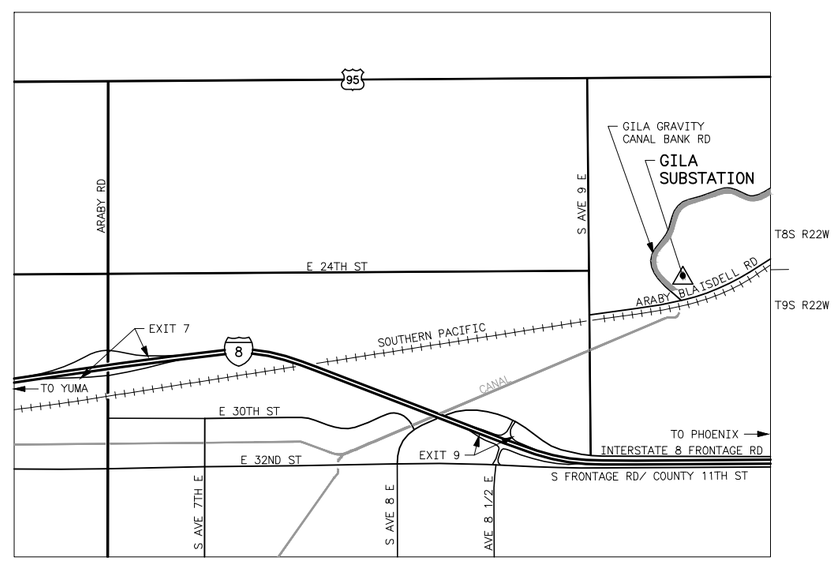

VICINITY MAP
NTS

C	2-10-16 A7-SH	REDRAWN TO CURRENT STANDARDS

SUPERSEDES DWG NO. 231-D-3509

UNITED STATES DEPARTMENT OF ENERGY
WESTERN AREA POWER ADMINISTRATION
CORPORATE SERVICES OFFICE - LAKEWOOD, COLORADO

GILA SUBSTATION

ARIZONA

LOCATION AND VICINITY MAP

DESIGNED BUREC - E. T. B. APPROVED STANLEY H. SPENCER
TRANSMISSION LINES AND SUBSTATION MAINT MANAGER

CAE	MAY 14, 1982	GLA	0015

Plotted By: lampman Mar 25, 2016- 9:25am IMAGES:C:\Users\lingle\Desktop\GILA.JPG;C:\Users\lingle\Desktop\Gila2.JPG;
S:\projects\TransmissionLines\Gila_Knob.Rebuild.2015\Drawings\DesignDrawings\DwgsReadyForFinal\Scripts\gla_0015c.dwg Last Saved By: Lampman, Eva (CONTR) on 3/25/2016 9:25 AM
XREF(S):

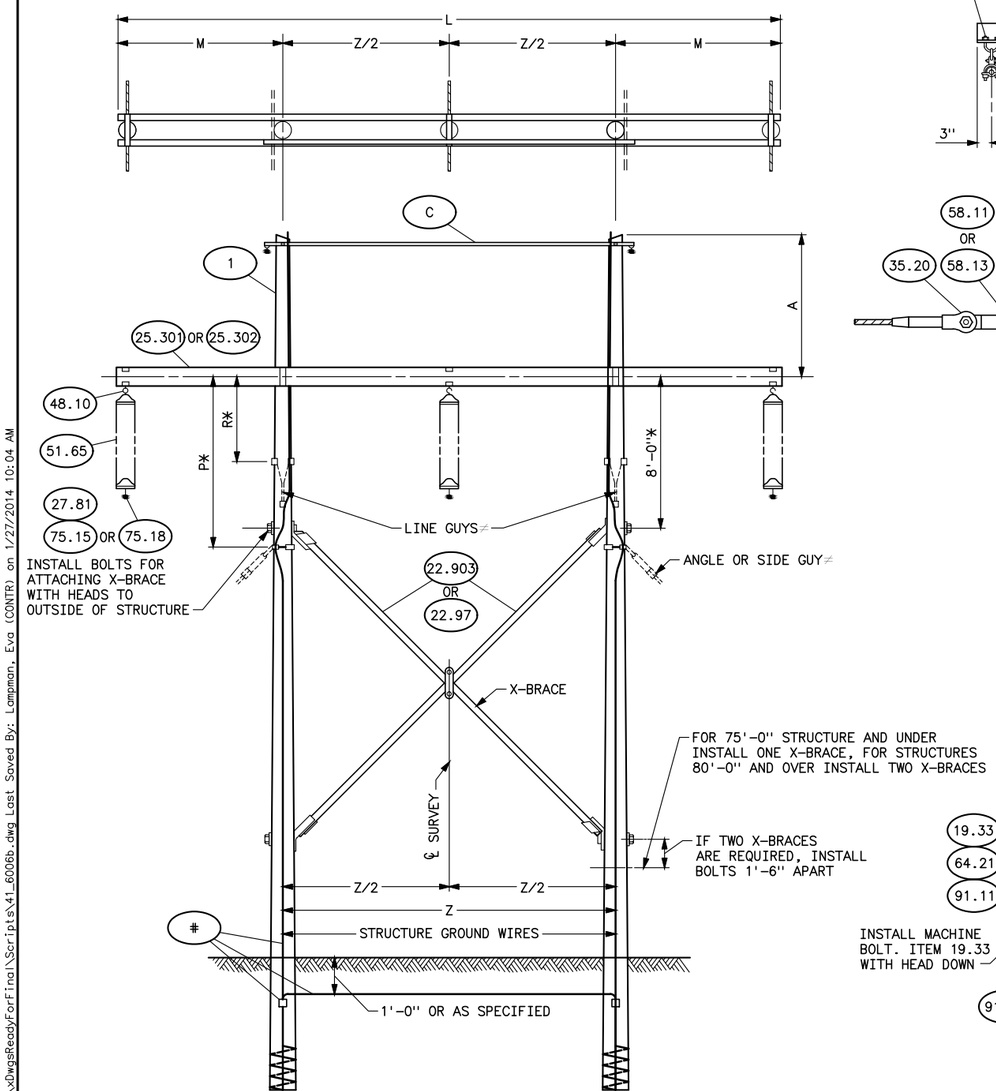

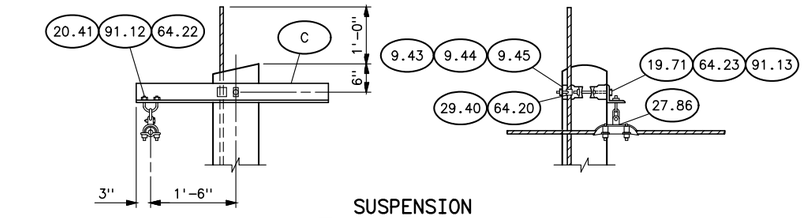

SUSPENSION

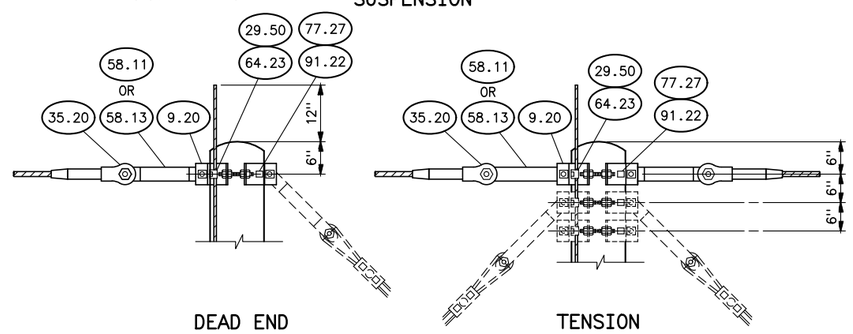

DEAD END

TENSION

DETAIL OF OVERHEAD GROUND WIRE ATTACHMENT

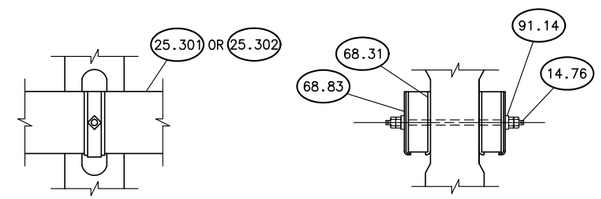

DETAIL OF CROSSARM ATTACHMENT

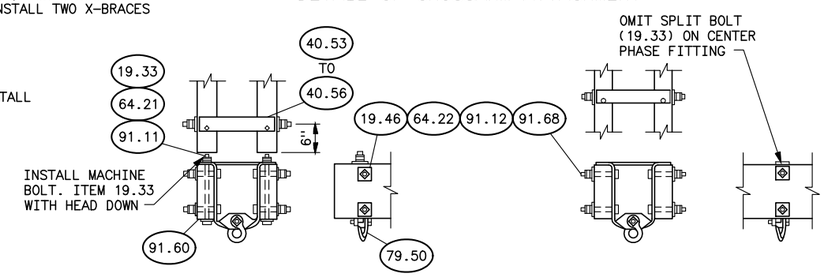

END PHASE ASSEMBLY

CENTER PHASE ASSEMBLY

DETAIL OF PHASE FITTING ASSEMBLY

STRUCTURE MATERIAL				
PART NO.	QUANTITY 138KV	QUANTITY 161KV	DESCRIPTION	DWG NO. 41
1	2	2	POLE, SEE STRUCTURE LIST FOR HEIGHT	
14.76	2	2	BOLT, DOUBLE ARMING, 7/8"x22" WITH 4 NUTS USE EXTRA NUTS AS LOCKNUTS	
19.33	4	4	BOLT, MACHINE, 1/2"x14"	
19.46	12	12	BOLT, MACHINE, 5/8"x6"	
25.301	2	–	CROSSARM, WOOD, 3 5/8"x11 1/2"x29'-0"	6025
25.302	–	2	CROSSARM, WOOD, 3 5/8"x11 1/2"x35'-0"	6025
40.53 TO 40.58	3	3	FITTING, PHASE — SELECT PHASE FITTING WITH DIMENSION "B" TO MATCH POLE GAIN	6039
64.21	4	4	LOCKNUT FOR 1/2" BOLT	
64.22	12	12	LOCKNUT FOR 5/8" BOLT	
68.31	4	4	PLATE, FLAT GAIN	6039
68.83	4	4	PLATE, RIBBED TIE	6039
79.50	3	3	SHACKLE, TWISTED	6039
91.11	4	4	LOCK WASHER, SPRING, FOR 1/2" BOLT	
91.12	12	12	LOCK WASHER, SPRING, FOR 5/8" BOLT	
91.14	4	4	LOCK WASHER, SPRING, FOR 7/8" BOLT	
91.60	4	4	WASHER, SQUARE FLAT, 2"x2"x1/8", 9/16" HOLE	
91.62	12	12	WASHER, SQUARE FLAT, 2 1/4"x2 1/4"x3/16", 11/16" HOLE	
22.903	1 OR 2	–	X-BRACE COMPLETE WITH FITTINGS (3 3/8"x4 3/8")	6029
22.97	–	1 OR 2	X-BRACE COMPLETE WITH FITTINGS (3 3/8"x5 3/8")	6029
#	GROUNDING MATERIAL PART NUMBERS AND DESCRIPTION, SHOWN ON 41 1012			

INSULATOR MATERIAL						
PART NO.	QUANTITY 138KV		QUANTITY 161KV		DESCRIPTION	DWG NO. 41
27.81	3		3		CLAMP, SUSPENSION, WITH SOCKET FITTING (FOR CONDUCTOR)	1000
48.10	3		3		HOOK, SUSPENSION	1003
51.65	24	3 STRINGS OF 8	30	3 STRINGS OF 10	INSULATOR, SUSPENSION TYPE, 10" DIA. 5 3/4" SPACING	1000
7515 OR 75.18	3		3		ROD, ARMOR, TAPERED SINGLE SUPPORT, SET	1000
					ROD, ARMOR,PREFORMED, SINGLE SUPPORT, SET	1000

OVERHEAD GROUND WIRE MATERIAL					
PART NO.	QUANTITY SUSPENSION	QUANTITY DEAD END	QUANTITY TENSION	DESCRIPTION	DWG NO. 41
9.20	–	2	2	BAND, FOUR-WAY STRAIN	6030
9.43, 9.44 OR 9.45	2	–	–	BAND, POLE TOP	6033
27.86	2Δ	–	–	CLAMP, SUSPENSION, WITH 2 1/4" LINK	
29.40	2	–	–	CLIP, GROUND, WITH 3/8"x1 1/2" CARRIAGE BOLT	6035, 6036, 6037
29.50	–	2	2	CLIP, GROUND, WITH 3/4"x2 1/2" CONE HEAD BOLT	6030
35.20	–	2	4	DEAD END, COMPRESSION TYPE O.G.W.	
58.11 OR 58.13	–	2	4	LINK, CONNECTING, PR. — FOR EYE-TYPE DEAD END, USE 58.11; FOR CLEVIS-TYPE DEAD END, USE 58.13	6030
64.20	2	–	–	LOCKNUT FOR 3/8" BOLT	
64.23	2	2	2	LOCKNUT FOR 3/4" BOLT	
77.27	2	4	4	LAG SCREW, 1/2"x4", FETTER DRIVE THREAD	
91.12	4	–	–	LOCK WASHER, SPRING FOR 5/8" BOLT	
91.22	–	4	4	WASHER, ROUND FLAT, 1 3/8" O.D., 9/16" HOLE	
91.13	2	–	–	LOCK WASHER, SPRING FOR 3/4" BOLT	
19.71	2	–	–	BOLT MACHINE, 3/4"x12"	
64.22	4	–	–	LOCKNUT FOR 5/8" BOLT WITH HEX NUTS	
20.41	2	–	–	BOLT, U, 5/8"x3" LONG, WITH 4 HEX NUTS	6033
C	1	–	–	ANGLE IRON	6041

VOLTAGE	A	L	Z	Z/2	M	P	R
138KV	7'-0"	29'-0"	14'-0"	7'-0"	7'-6"	9'-0"	4'-0"
161KV	8'-0"	35'-0"	17'-0"	8'-6"	9'-0"	9'-0"	4'-6"

NOTES

1. USE TWO LAG SCREWS AND WASHERS FOR EACH FOUR-WAY STRAIN BAND.
2. ≠ USE ONLY WHEN SPECIFIED.
3. * WHEN AN ADDITIONAL DISC IS USED ON ANGLE STRUCTURES, AT RAILROAD OR MAIN HIGHWAY CROSSINGS DIMENSION SHALL BE INCREASED ONE FOOT.
4. ø GREATER THAN 22-INCH LENGTH MAY BE REQUIRED FOR EXTRA LARGE POLES.

REFERENCE DRAWINGS

GROUNDING DETAILS _____ 41 1012
DRILLING AND GAINING DETAILS WITH OGW _____ 41 6024
X-BRACE DETAILS _____ 41 6029
H-FRAME ANGLE IRON DETAILS _____ 41 6041
GUY ARRANGEMENT-ASSEMBLY-H-FRAME ___ 41 6051 AND 41 6052

FOR INFORMATION ONLY

B	1-27-14 A7-DDD	REDRAWN.

SUPERSEDES DWG NO. 40-D-5428

UNITED STATES DEPARTMENT OF ENERGY
WESTERN AREA POWER ADMINISTRATION
CORPORATE SERVICES OFFICE – LAKEWOOD, COLORADO

TRANSMISSION LINE STANDARDS
TYPE HS 138KV AND 161KV
SUSPENSION STRUCTURE

DESIGNED BUREC _____ APPROVED BUREC _____

C A E	JULY 1, 1981	41	6006

Plotted By:aturner Feb 25, 2016- 8:18am IMAGES:
S:\projects\Misc\StandardDrawings\DesignDrawings\xDwgsReadyForFinal\Scripts\41_6006b.dwg Last Saved By: Lampman, Eva (CONTR) on 1/27/2014 10:04 AM
XREF(S):

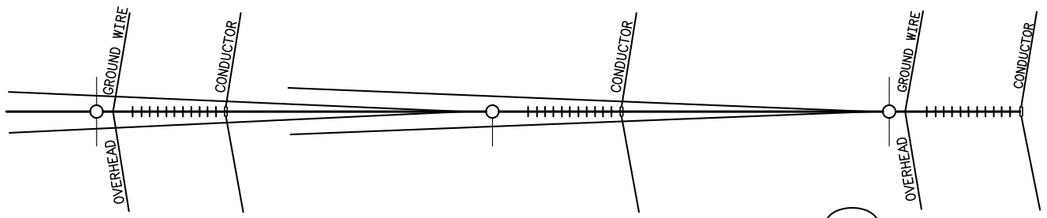

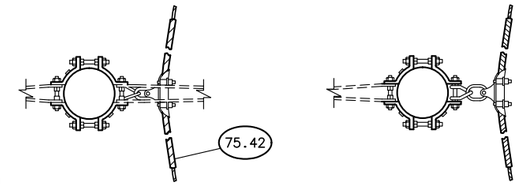

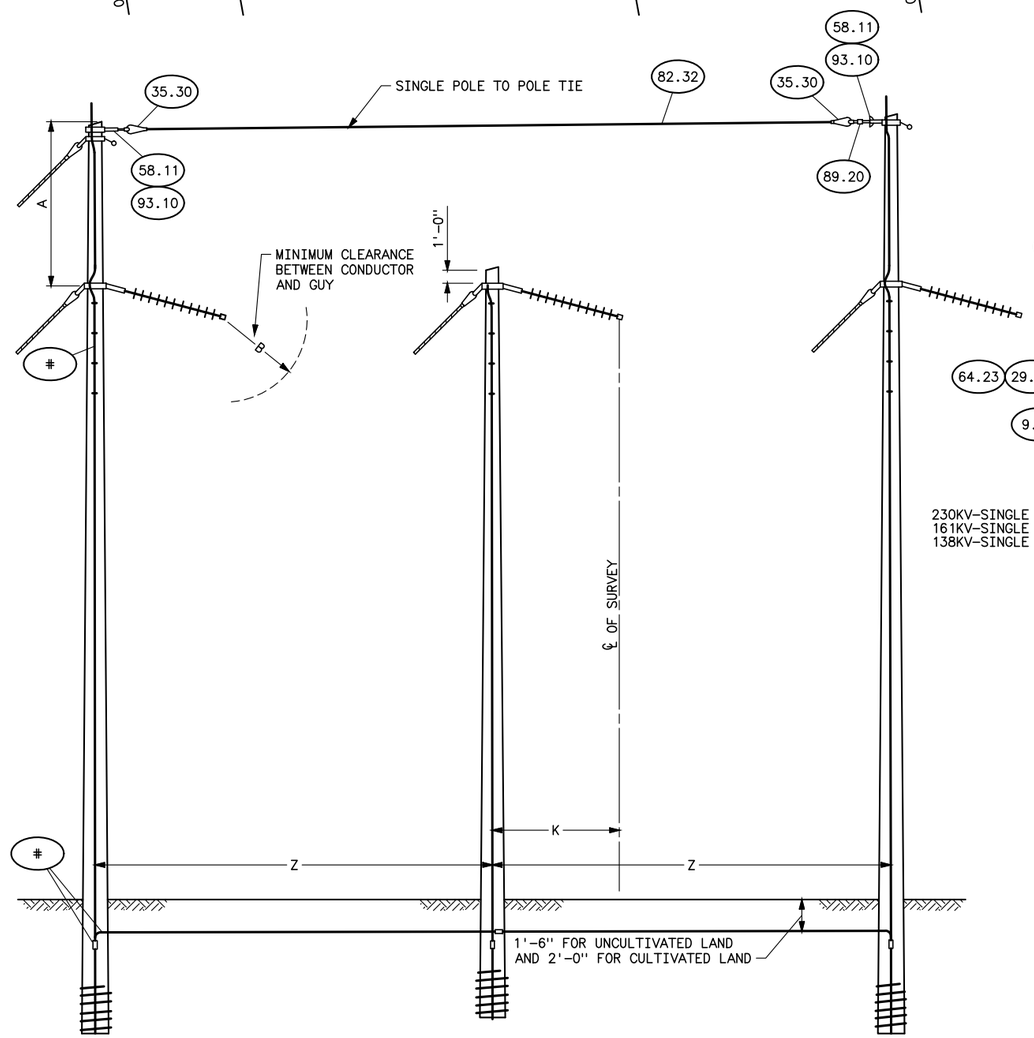

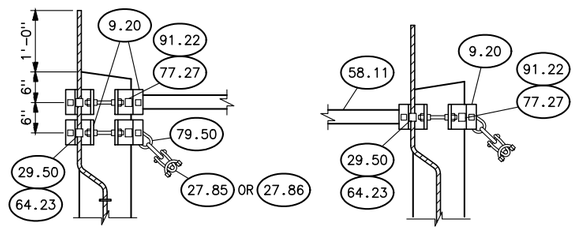

DETAIL OF OVERHEAD GROUND WIRE ATTACHMENT

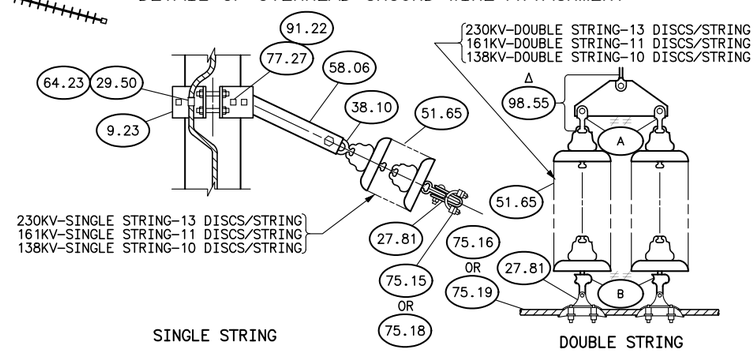

DETAIL OF INSULATOR ATTACHMENT

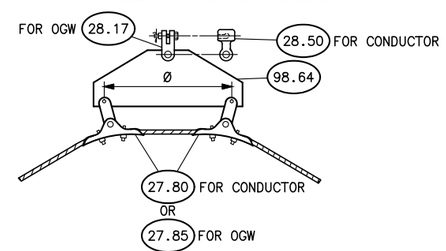

YOKE ASSEMBLY
FOR CONDUCTOR & OGW

VOLTAGE	A	K	Z	B
138KV	10'-0"	6'-0"	23'-0"	5'-0"
161KV	10'-0"	6'-6"	24'-0"	5'-6"
230KV	10'-0"	7'-6"	25'-0"	6'-5"

STRUCTURE MATERIAL

PART NO.	QUANTITY W/OVERHEAD GROUND WIRES	DESCRIPTION	DWG NO. 41
1	3	POLE, SEE STRUCTURE LIST FOR HEIGHT	
≠ 9.20	2	BAND, FOUR-WAY STRAIN, TYPE A (WHEN SPECIFIED)	6030
9.23	3	BAND, FOUR-WAY STRAIN, TYPE B	6031
29.50	5	CLIP, GROUND	6031
58.06	3	LINK, CONNECTING PR	6031
≠ 58.11	2	LINK, CONNECTING PR (USE WITH 9.20)	6030
64.23	5	LOCKNUT FOR 3/4" BOLT	
77.27	10	LAG SCREW, 1/2"x4", FETTER DRIVE THREAD	
91.22	10	WASHER, ROUND FLAT, 1 3/8" OD 9/16" HOLE	
93.10	2	SHEAVE WHEEL, FOR 7/16" HIGH STRENGTH STEEL STRAND	6030
35.30	2	DEAD END, AUTOMATIC VISE TYPE FOR GUY STRAND, SHORT BAIL	
82.32	AS REQUIRED	STEEL STRAND, 7 WIRE, 7/16" HIGH STRENGTH	
89.20	1	TURNBUCKLE, CLEVIS-EYE, 7/8"x12"	BT-3155
#	GROUNDING MATERIAL PART NO'S AND DESCRIPTION SHOWN ON 41 1013		

INSULATOR MATERIAL

PART NO.	QUANTITY SINGLE STRING 138	SINGLE STRING 161	SINGLE STRING 230	SINGLE STRING WITH YOKE 138	SINGLE STRING WITH YOKE 161	SINGLE STRING WITH YOKE 230	DOUBLE STRING≠ 138	DOUBLE STRING≠ 161	DOUBLE STRING≠ 230	DESCRIPTION	DWG NO. 41
# 27.80	–	–	–	6	6	6	–	–	–	CLAMP, SUSPENSION, WITH CLEVIS-EYE CONNECTION	
27.81	3	3	3	–	–	–	6	6	6	CLAMP, SUSPENSION, WITH SOCKET FITTING	1000
28.52	–	–	–	–	–	–	2≠≠	2≠≠	2≠≠	CLEVIS, SOCKET, 4 1/2" LONG	
38.10	3	3	3	3	3	3	3	3	3	CONNECTOR, BALL-EYE	1003
51.65	30	33	39	30	33	39	60	66	78	INSULATORS, SUSPENSION TYPE, 10"ø, 5 3/4" SPACING	1000
75.15 OR 75.18	3	3	3	–	–	–	–	–	–	ROD, ARMOR, TAPERED, SINGLE SUPPORT (ACSR) SET ROD, ARMOR, PREFORMED, SINGLE SUPPORT (ACSR) SET	1000
75.16 OR 75.19	–	–	–	3	3	3	3	3	3	ROD, ARMOR, TAPERED, DOUBLE SUPPORT (ACSR) SET ROD, ARMOR, PREFORMED, DOUBLE SUPPORT (ACSR) SET	
Δ 98.55	–	–	–	–	–	–	3	3	3	YOKE, COMPLETE WITH FITTINGS	
# 98.64	–	–	–	3	3	3	–	–	–	YOKE	
# 28.50	–	–	–	3	3	3	–	–	–	CLEVIS, SOCKET CONNECTION	

OVERHEAD GROUND WIRE MATERIAL

PART NO.	QUANTITY	DESCRIPTION	DWG NO. 41
9.20	1	BAND, FOUR-WAY STRAIN	6030
# 28.17	2	CLEVIS, - CLEVIS 90° CONNECTOR	
27.85 OR 27.86	2✱,#	CLAMP, SUSPENSION, WITH 2 1/4" LINK FOR OGW	
29.50	1	CLIP, GROUND	6030
64.23	1	LOCKNUT FOR 3/4" BOLT	
75.42	2	ROD, ARMOR, PREFORMED, SET	
77.27	2	LAG SCREW, 1/2"x4", FETTER DRIVE THREAD	
79.50	2	SHACKLE, TWISTED	6039
91.22	2	WASHER, ROUND FLAT, 1 3/8" OD, 9/16" HOLE	

FOR INFORMATION ONLY

NOTES

1. USE TWO LAG SCREWS AND WASHERS FOR EACH FOUR-WAY STRAIN BAND.
2. ✱ FOR LINE ANGLES UP TO AND INCLUDING 30° USE SUSPENSION CLAMP. PART NO. 27.86.
3. ✱ FOR LINE ANGLES GREATER THAN 30° USE LARGE ANGLE SUSPENSION CLAMP PART NO. 27.85.
4. ≠ USE ONLY WHEN SPECIFIED.
5. POLES SHALL BE GIVEN RAKE OF 1/4-INCH FOR EACH FOOT OF POLE LENGTH AGAINST STRAIN.
6. ≠≠ USE ITEM 28.52 AT (A) AND ITEM 38.10 AT (B) WHEN INSULATOR CAPS ARE SPECIFIED TO BE AWAY FROM STRUCTURE.
7. Δ WHEN SIZED SUSPENSION CLAMPS ARE SPECIFIED THE LENGTH OF THE YOKE SHALL BE EQUAL TO THE LENGTH OF THE SUSPENSION CLAMP PLUS AT LEAST 10 INCHES.
8. # YOKE ASSEMBLY SHALL BE USED FOR CONDUCTOR ASSEMBLIES AT LINE ANGLES OF 20° TO 60°, FOR OVERHEAD GROUND WIRE ASSEMBLIES AT LINE ANGELS OF 30° TO 60°.
9. Ø LENGTH OF SUSPENSION CLAMP PLUS 3 INCHES.

REFERENCE DRAWINGS

GROUNDING DETAILS _____ 41 1013
GUY ARRANGEMENT, FOR TYPE 3A AND 3AB STRUCTURES WITH OVERHEAD GROUND WIRES _____ 41 6053

E	5-28-14 A7-DDD	REDRAWN.

SUPERSEDES DWG NO. 40-D-5686

UNITED STATES DEPARTMENT OF ENERGY
WESTERN AREA POWER ADMINISTRATION
CORPORATE SERVICES OFFICE - LAKEWOOD, COLORADO

STANDARD DESIGNS
TRANSMISSION LINES
TYPE 3A 138, 161, AND 230KV MEDIUM ANGLE STRUCTURE

DESIGNED BUREC _____ APPROVED BUREC _____

C A F	AUGUST 6, 1979	41	6013

Plotted By: aturner Feb 25, 2016- 8:21am IMAGES:
S:\projects\Misc\StandardDrawings\DesignDrawings\xDwgsReadyForFinal\Scripts\41_6013e.dwg Last Saved By: Denton, Debra on 5/28/2014 2:10 PM
XREF(S):

LIST OF DIMENSIONS							
STRUCTURE TYPE	Z	A	B	C	C-PART NO.	D	D-PART NO.
TYPE 3T	17'-0"	34'-0"	9'-0"	27'-0"	25.304	19'-0"	25.303
TYPE 3T-1	20'-0"	40'-0"	12'-0"	30'-0"	25.306	22'-0"	25.305
TYPE 3T-2	25'-0"	50'-0"	17'-0"	35'-0"	25.308	27'-0"	25.307

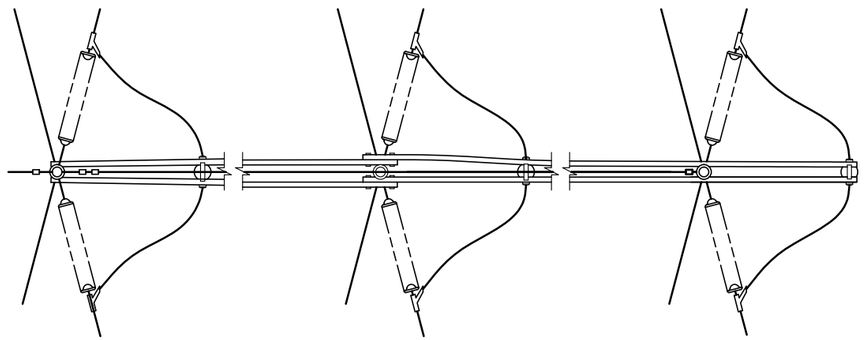

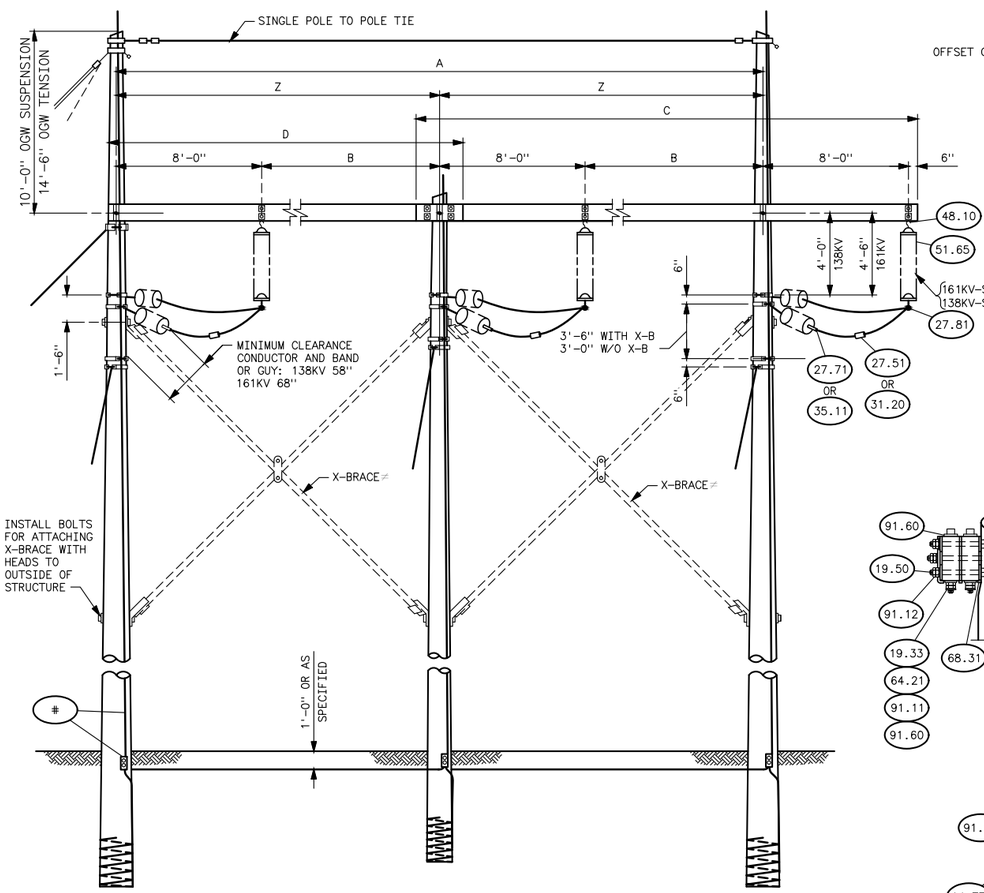

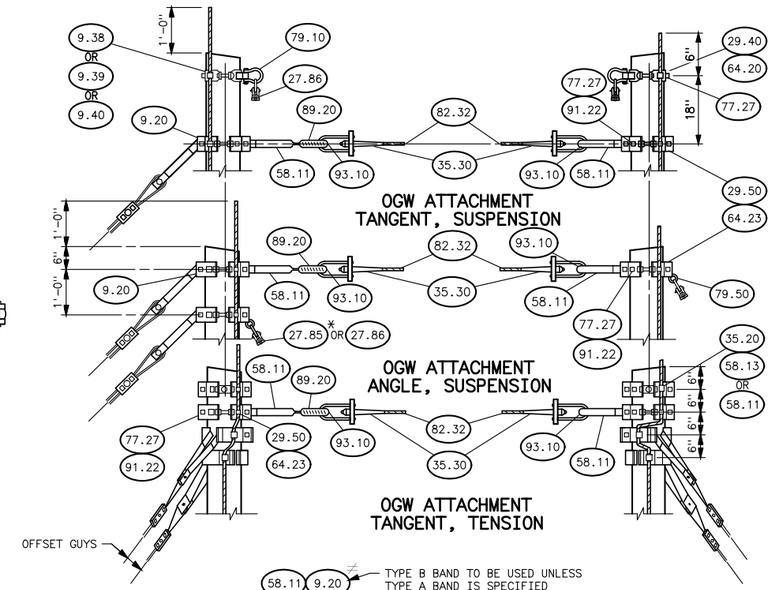

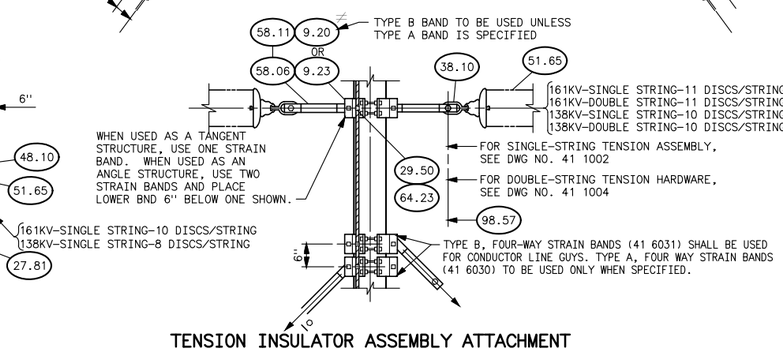

TENSION INSULATOR ASSEMBLY ATTACHMENT

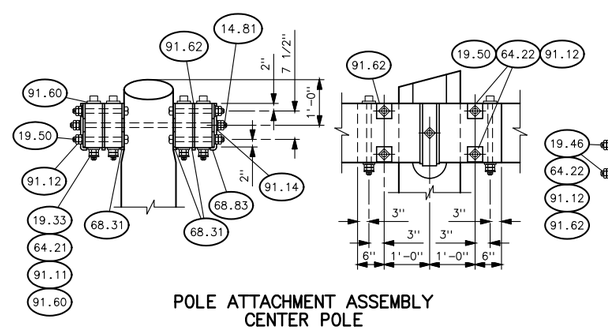

POLE ATTACHMENT ASSEMBLY CENTER POLE

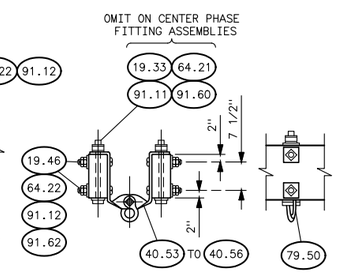

SUSPENSION INSULATOR SUPPORT ASSEMBLY

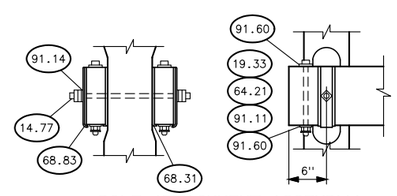

POLE ATTACHMENT ASSEMBLY OUTSIDE POLES

NOTES

1. Δ ANCHOR TYPE SHACKLE AND 2 1/4" LINK NOT REQUIRED WHEN TYPE B POLE TOP BAND, DWG NO. 41 6035 IS USED.
2. * USE ITEM 27.86 FOR LINE ANGLES UP TO AND INCLUDING 30°, USE ITEM 27.85 LARGE ANGLE SUSPENSION CLAMP FOR LINE ANGLES MORE THAN 30°.
3. ≠ USE ONLY WHEN SPECIFIED.
4. USE TWO LAG SCREWS AND WASHERS FOR EACH FOUR-WAY STRAIN BAND.

REFERENCE DRAWINGS

GROUNDING DETAILS _____ 41 1012
DRILLING AND GAINING DETAILS _____ 41 6024
GUY ARRANGEMENT _____ 41 6047, 41 6054

STRUCTURE MATERIAL

PART NO.	QUANTITY WITH OVERHEAD GROUND WIRE 138KV TANGENT OGW IN SUSPENSION	138KV TANGENT OGW IN TENSION	138KV ANGLE OGW IN SUSPENSION	138KV ANGLE OGW IN TENSION	161KV TANGENT OGW IN SUSPENSION	161KV TANGENT OGW IN TENSION	161KV ANGLE OGW IN SUSPENSION	161KV ANGLE OGW IN TENSION	DESCRIPTION	DWG NO. 41
1	3		3		3		3		POLE, SEE STRUCTURE LIST FOR HEIGHT	
SEE TABLE	2 2		2 2		2 2		2 2		CROSSARM, WOOD, 3 5/8"x11 1/2"x(SEE TABLE)	6097
9.20≠	3		6		3		6		BAND, FOUR-WAY, STRAIN, TYPE A (WHEN SPECIFIED)	6030
9.23	3		6		3		6		BAND, FOUR-WAY STRAIN, TYPE B	6031
14.77	2		2		2		2		BOLT, DOUBLE ARMING, 7/8"x24" USE EXTRA NUTS AS LOCKNUTS	
29.50	3		6		3		6		CLIP, GROUND WITH 3/4"x2 1/2" CONE HEAD BOLT	6030
14.81	1		1		1		1		BOLT, DOUBLE ARMING, 7/8"x32" USE EXTRA NUTS AS LOCKNUTS	
19.33	8		8		8		8		BOLT, MACHINE, 1/2"x14"	
19.46	12		12		12		12		BOLT, MACHINE, 5/8"x6"	
19.50	8		8		8		8		BOLT, MACHINE, 5/8"x10"	
40.53 TO 40.56	3		3		3		3		FITTING, PHASE — SELECT PHASE FITTING WITH DIMENSION "B" WHICH MAKES BEST FIT BETWEEN CROSSARMS	6039
58.06≠	6		6		6		6		LINK, CONNECTING, PAIR (USE WITH 9.23)	6031
58.11	6		6		6		6		LINK, CONNECTING, PAIR (USE WITH 9.20)	6030
64.21	8		8		8		8		LOCKNUT, FOR 1/2" BOLT	
64.22	20		20		20		20		LOCKNUT, FOR 5/8" BOLT	
68.31	8		8		8		8		PLATE, FLAT GAIN	6039
68.83	6		6		6		6		PLATE, RIBBED TIE	6039
77.27	6		12		6		12		LAG SCREW, 1/2"x4" FETTER DRIVE THREAD	
79.50	3		3		3		3		SHACKLE, TWISTED	6039
91.11	8		8		8		8		LOCK WASHER, SPRING, FOR 1/2" BOLT	
91.12	20		20		20		20		LOCK WASHER, SPRING, FOR 5/8" BOLT	
91.14	6		6		6		6		LOCK WASHER, SPRING, FOR 7/8" BOLT	
91.22	6		12		6		12		WASHER, ROUND FLAT, 1 3/8" O.D., 9/16" HOLE	
91.60	14		14		14		14		WASHER, SQUARE FLAT, 2"x2"x1/8", 9/16" HOLE	
91.62	36		36		36		36		WASHER, SQUARE FLAT, 2 1/4"x2 1/4"x3/16", 11/16" HOLE	
64.23	3		6		3		6		LOCKNUT FOR 3/4" BOLT	
GROUNDING MATERIAL PART NO.'S AND DESCRIPTION SHOWN ON 41 1012										

INSULATOR MATERIAL

	SINGLE STRING 138KV	SINGLE STRING 161KV	DOUBLE STRING≠ 138KV	DOUBLE STRING≠ 161KV		
27.70 OR 35.11	–	–	6	6	CLAMP, STRAIN, WITH CLEVIS FITTING, FOR CONDUCTOR	
					DEAD END, COMPRESSION TYPE, FOR CONDUCTOR	
27.71 OR 35.11	6	6	–	–	CLAMP, STRAIN, WITH SOCKET FITTING, FOR CONDUCTOR	1002
					DEAD END, COMPRESSION TYPE, WITH SOCKET FITTING	1002
27.51 OR 31.20	3	3	3	3	CLAMP, PARALLEL GROOVE, 3-BOLT, FOR CONDUCTOR	
					COMPRESSION JUMPER CONNECTOR FOR CONDUCTOR	
27.81	3	3	3	3	CLAMP, SUSPENSION, WITH SOCKET FITTING	1000
38.10	6	6	–	–	CONNECTOR, BALL EYE	1003
48.10	3	3	3	3	HOOK, SUSPENSION	1003
51.65	84	96	144	162	INSULATOR, SUSPENSION TYPE, 10" DIAMETER, 5 3/4" SPACING	
98.57	–	–	6	6	DOUBLE YOKE ASSEMBLY, COMPLETE WITH FITTINGS	1004

OVERHEAD GROUND WIRE MATERIAL

	TANGENT SUSPENSION	TANGENT TENSION	ANGLE SUSPENSION	ANGLE TENSION		
9.20	2	4	3	6	BAND, FOUR-WAY STRAIN	6030
9.38, 9.39 OR 9.40	2	–	–	–	BAND, POLE TOP	6035, 6036 OR 6037
27.85 OR 27.86	2	–	2	–	CLAMP, SUSPENSION, WITH 2 1/4" LINK Δ *	
29.40	2	–	–	–	CLIP, GROUND WITH 3/8"x1 1/2" CARRIAGE BOLT	6035, 6036 OR 6037
29.50	2	4	2	6	CLIP, GROUND WITH 3/4"x2 1/2" CONE HEAD BOLT	6030
35.20	–	4	–	4	DEAD END, COMPRESSION TYPE FOR OGW	
58.11	2	2	2	2	LINK, CONNECTING, PAIR	6030
35.30	2	2	2	2	DEAD-END, AUTOMATIC VISE TYPE FOR GUY STRAND, SHORT BAIL	6030
58.11 OR 58.13	–	4	–	4	LINK, CONNECTING, PAIR — FOR EYE-TYPE DEADEND, USE 58.11 FOR CLEVIS-TYPE DEADEND, USE 58.13	6030
64.20	2	–	–	–	LOCKNUT FOR 3/8" BOLT	
64.23	2	4	3	6	LOCKNUT FOR 3/4" BOLT	
77.27	6	8	6	12	LAG SCREW, 1/2"x4", FETTER DRIVE THREAD	
79.10	2	–	–	–	SHACKLE, ANCHOR TYPE Δ	6036 OR 6037
79.50	–	–	2	–	SHACKLE, TWISTED	6039
82.32	AS REQUIRED				STEEL STRAND, 7/16"-7-WIRE, HIGH STRENGTH	
91.22	4	8	6	12	WASHER, ROUND FLAT, 1 3/8" O.D., 9/16" HOLE	
93.10	3	3	3	3	SHEAVE WHEEL FOR 7/16" STRAND	6030
89.20	1	1	1	1	TURNBUCKLE, CLEVIS-EYE, 7/8"x12"	

FOR INFORMATION ONLY

B	5-28-14 A7-DDD	REDRAWN.

SUPERSEDES DWG NO. 40-D-5690

UNITED STATES DEPARTMENT OF ENERGY
WESTERN AREA POWER ADMINISTRATION
CORPORATE SERVICES OFFICE - LAKEWOOD, COLORADO

TRANSMISSION LINE STANDARDS
TYPE 3T 138KV AND 161KV
3-POLE TENSION STRUCTURE

DESIGNED BUREC _____ APPROVED BUREC _____

CAF	AUGUST 3, 1981	41	6017

Plotted By:aturner Feb 25, 2016- 8:23am
IWAGES:
S:\Projects\Wisc\StandardDrawings\DesignDrawings\xDwgsReadyForFinal\Scripts\41_6017b.dwg Last Saved By: Denton, Debra on 5/28/2014 2:11 PM

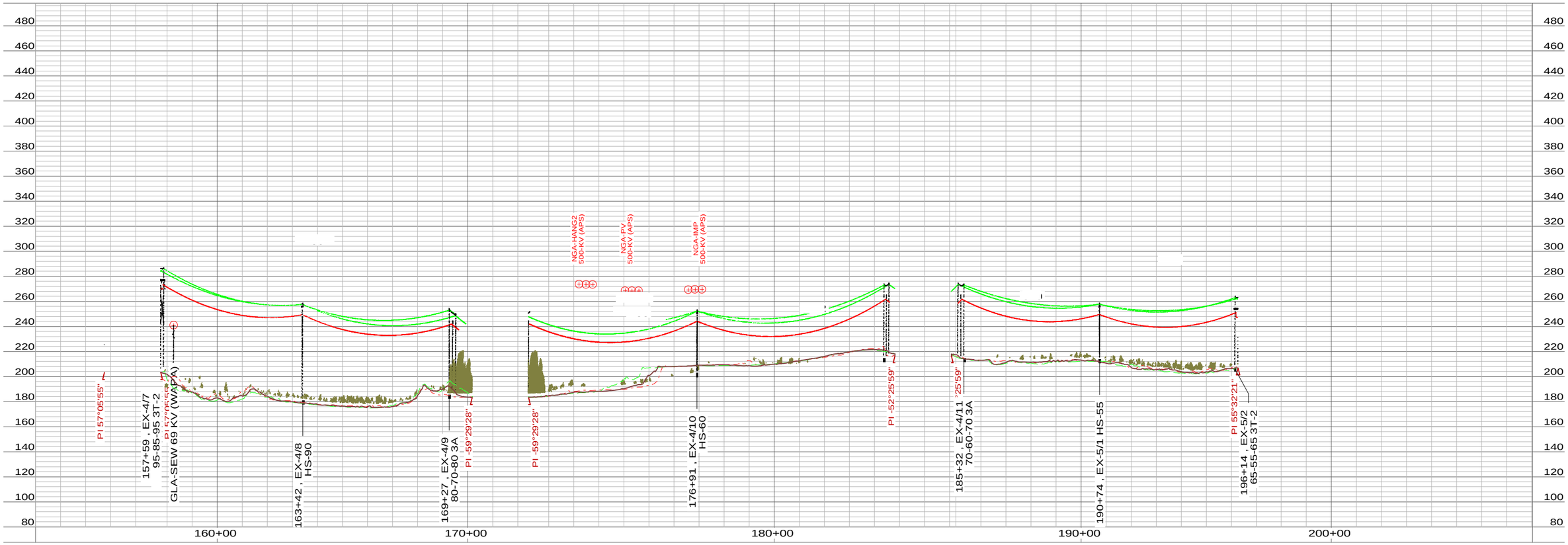

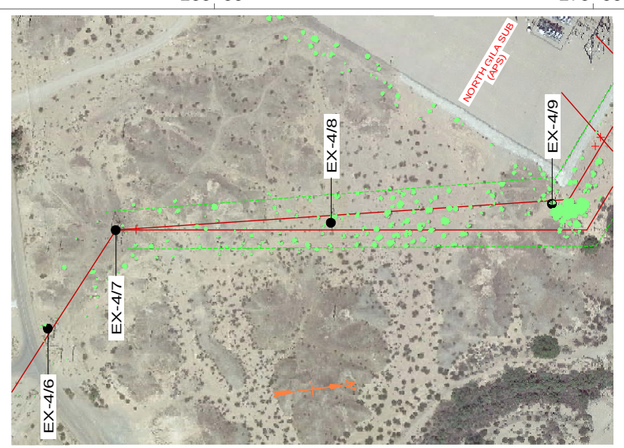

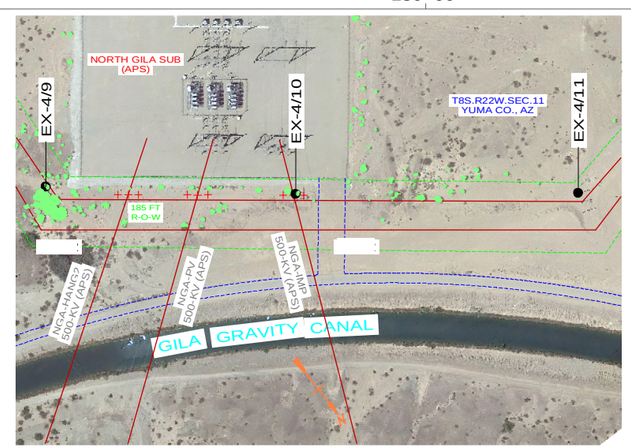

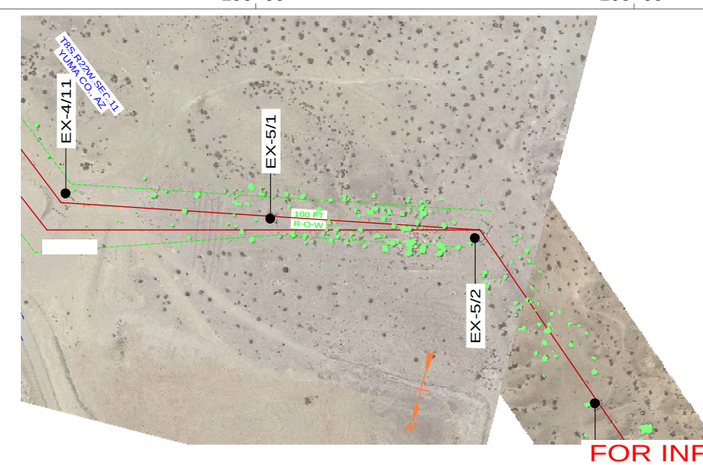

FOR INFORMATION ONLY

R-O-W EDGE CENTERLINE R-O-W EDGE	SCALE: 1" = 200' HORIZONTAL (0' 100' 200') 1" = 40' VERTICAL (0' 20' 40')	CONDUCTOR - 300 KCMIL 12-STRAND ANACONDA TYPE 178/R2 (HOLLOW "EYE-BEAM") OGW - 7/16-INCH 7-STRAND HS STEEL

UNITED STATES DEPARTMENT OF ENERGY
WESTERN AREA POWER ADMINISTRATION
HEADQUARTERS - LAKEWOOD, COLORADO

GILA - KNOB
161-KV TRANSMISSION LINE
ARIZONA

PLAN AND PROFILE

EXISTING STR. 4/7 TO EXISTING STR. 5/2

DESIGNED ALLEN TURNER
APPROVED STEVE ROCK
ELECTRICAL ENGINEERING MANAGER

PLS	CAE	MARCH 25, 2016	GLA-KNB	T400

GLA-KNB 4-7 TO 5-2.XYZ

PATH: S:\PROJECTS\TRANSMISSIONLINES\GILA_KNOB.REBUILD.2015\PLSCADD\XYZ\ GLA-KNB 4-7 TO 5-2.XYZ
PLS-CADD PROJECT LINE EDIT: "APS APPROACH SPANS - AH & BK 300 KCMIL COPPER"
THIS SHEET GENERATED: 3/25/2016 - 12:23:47 PLS-CADD VERSION 14.00/64 - ATURNER

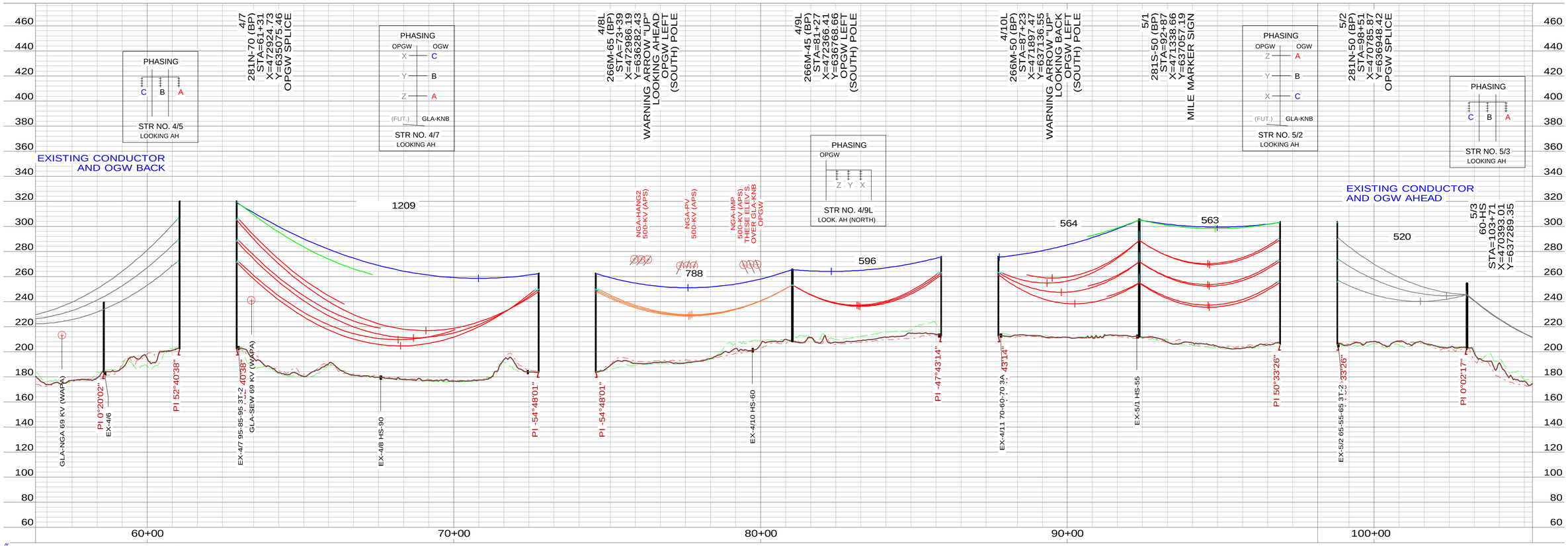

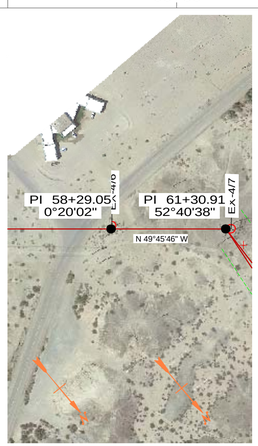

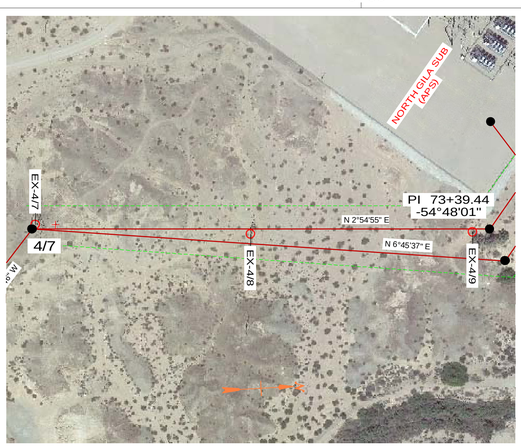

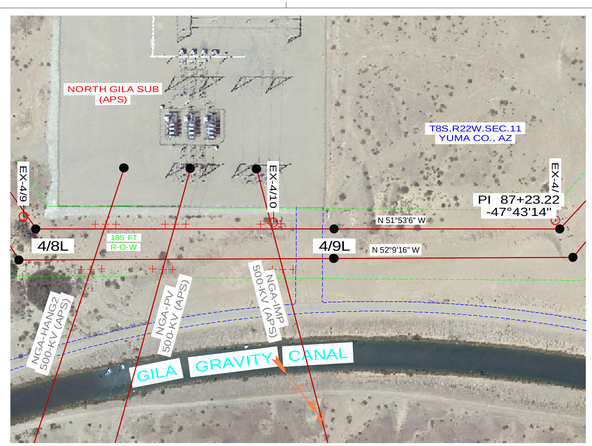

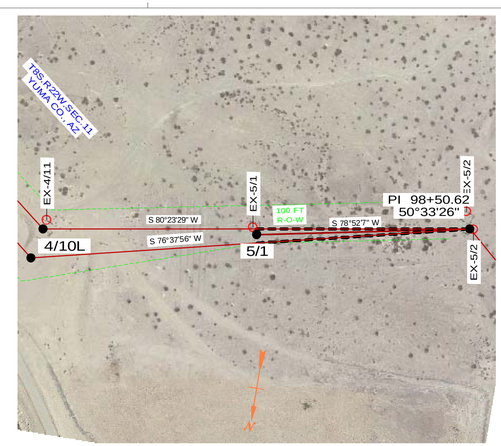

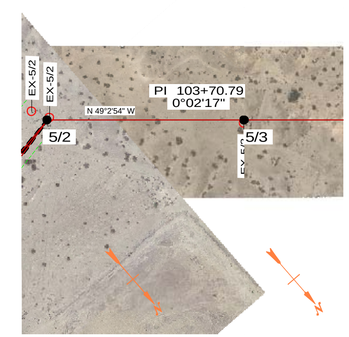

STA. 55+54 - STA. 106+32

PATH: S:\PROJECTS\TRANSMISSION\LINES\GILA_KNOB REBUILD 2015\PLS\CADD\XYZ\ GLA-KNB 4-7 TO 5-2.XYZ
PLS-CADD PROJECT LINE "EDIT" "REBUILD - MINUS APS CROSSINGS"
THIS SHEET GENERATED: 4/19/2016 - 8:13:35 PLS-CADD VERSION 14.20X64 - ATURNER

R-O-W EDGE
CENTERLINE
R-O-W EDGE

SCALES:
1" = 200' HORIZONTAL
0' 100' 200'
1" = 40' VERTICAL
0' 20' 40'

PLS-CADD SIGN CONVENTION:
() UNSIGNED: RT AH (-) NEG. SIGN: LT AH

COORDINATES AND BEARINGS ARE BASED ON THE ARIZONA STATE PLANE COORDINATE SYSTEM, WEST ZONE, NAD83 DATUM.
UNITS ARE US SURVEY FEET.

NESC LIGHT LOADING
COND. - 1272 KCMIL, 54/19 PHEASANT/ACSS/MA2
CURVE SHOWN AT 482 °F, FINAL CONDITIONS
[4/8-4/9] 1334 KCMIL, 54/19 MARTIN ACCR-T13
CURVE SHOWN AT 410 °F, FINAL CONDITIONS
OGW - 1/2-IN 7 STR. HS STEEL
OPGW - AFL CC-57-465
CURVE SHOWN AT 20 °F, INITIAL CONDITIONS

MAX. ACSS DESIGN OPERATING TEMP. = 482 °F
GROUND CLEARANCE = 24 FT. MINIMUM
+ / - 28 FT. SIDE PROFILES
LIDAR AND IMAGERY SEP. 2011

STRUCTURE RANGE, WIRE, RULING SPAN, INSTALLATION TENSION, DISPLAY CONDITION

4/8L - 4/9L, ACCR 1351-T13 (MARTIN ACCR) V2.WIR, RULING SPAN 788 (FT), TENSION 9750 (LBS) AT 60 (DEG F) INITIAL, DISPLAYED 410 °F = 210 °C MAX SAG FE
4/7 - 4/8L, PHEASANT_ACSS.WIR, RULING SPAN 1214 (FT), TENSION 8430 (LBS) AT 60 (DEG F) INITIAL, DISPLAYED 482 °F = 250 °C MAX SAG FE
4/7 - 4/8R, PHEASANT_ACSS.WIR, RULING SPAN 1245 (FT), TENSION 8441 (LBS) AT 60 (DEG F) INITIAL, DISPLAYED 482 °F = 250 °C MAX SAG FE
4/9L - 4/10L, PHEASANT_ACSS.WIR, RULING SPAN 596 (FT), TENSION 8505 (LBS) AT 60 (DEG F) INITIAL, DISPLAYED 482 °F = 250 °C MAX SAG FE
4/10L - 5/2, PHEASANT_ACSS.WIR, RULING SPAN 567 (FT), TENSION 8506 (LBS) AT 60 (DEG F) INITIAL, DISPLAYED 482 °F = 250 °C MAX SAG FE
4/10R - 5/2, PHEASANT_ACSS.WIR, RULING SPAN 579 (FT), TENSION 8513 (LBS) AT 60 (DEG F) INITIAL, DISPLAYED 482 °F = 250 °C MAX SAG FE
4/7 - 4/8L, CC-57-465.WIR, RULING SPAN 1204 (FT), TENSION 2250 (LBS) AT 60 (DEG F) INITIAL, DISPLAYED 30 °F AAMT INITIAL FE
4/8L - 4/9L, CC-57-465.WIR, RULING SPAN 781 (FT), TENSION 1700 (LBS) AT 60 (DEG F) INITIAL, DISPLAYED 30 °F AAMT INITIAL FE
4/9L - 4/10L, CC-57-465.WIR, RULING SPAN 590 (FT), TENSION 2250 (LBS) AT 60 (DEG F) INITIAL, DISPLAYED 30 °F AAMT INITIAL FE
4/10L - 5/2, CC-57-465.WIR, RULING SPAN 562 (FT), TENSION 2250 (LBS) AT 60 (DEG F) INITIAL, DISPLAYED 30 °F AAMT INITIAL FE
4/7 - 4/8R, 1_2-7_STRAND_HS_STEEL.WIR, RULING SPAN 1255 (FT), TENSION 2500 (LBS) AT 60 (DEG F) INITIAL, DISPLAYED 30 °F AAMT INITIAL FE
4/10R - 5/2, 1_2-7_STRAND_HS_STEEL.WIR, RULING SPAN 584 (FT), TENSION 3000 (LBS) AT 60 (DEG F) INITIAL, DISPLAYED 30 °F AAMT INITIAL FE

* DESIGNED FOR 230-KV

A	4/19/16 A7-AFT	ADDED C/L BEARINGS AND MOVED STRS. 4/7, 5/1, 5/2.

UNITED STATES DEPARTMENT OF ENERGY
WESTERN AREA POWER ADMINISTRATION
HEADQUARTERS - LAKEWOOD, COLORADO

GILA - KNOB
161-KV TRANSMISSION LINE
ARIZONA

PLAN AND PROFILE
STR. 4/7 TO STR. 5/3

GLA-KNB 4-7 TO 5-2.XYZ

DESIGNED ALLEN TURNER
APPROVED STEVE ROCK
ELECTRICAL ENGINEERING MANAGER

PLS

CAD	MARCH 25, 2016	GLA-KNB	4207

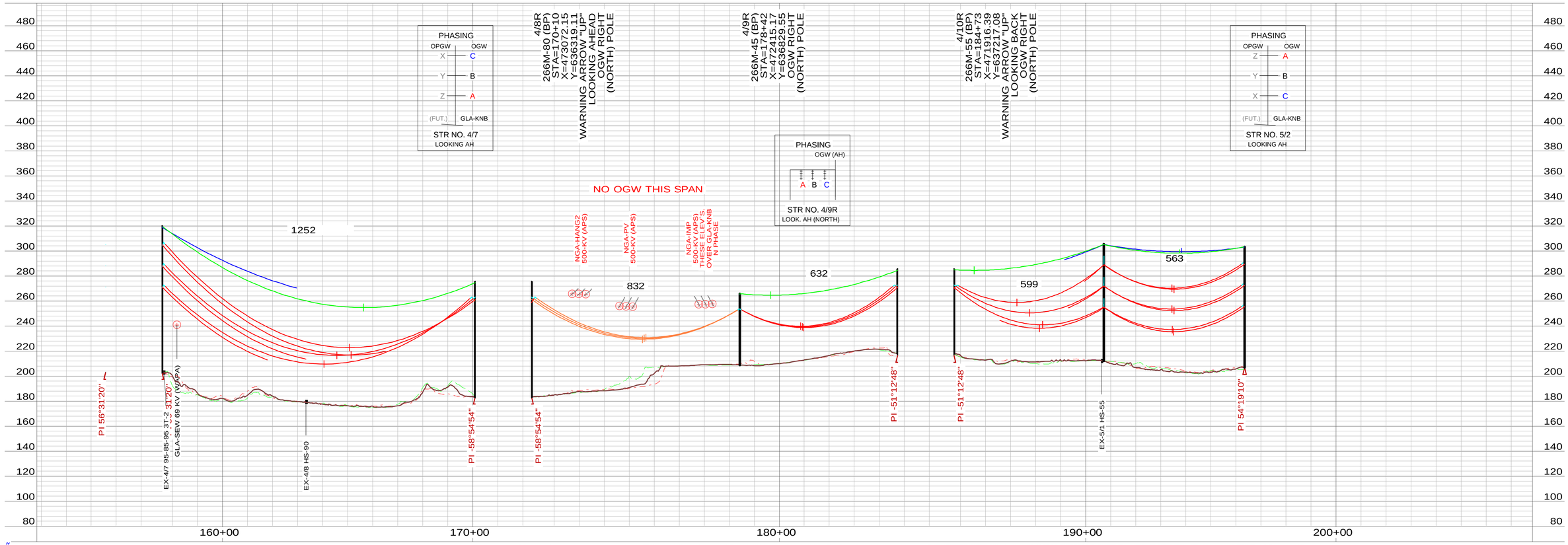

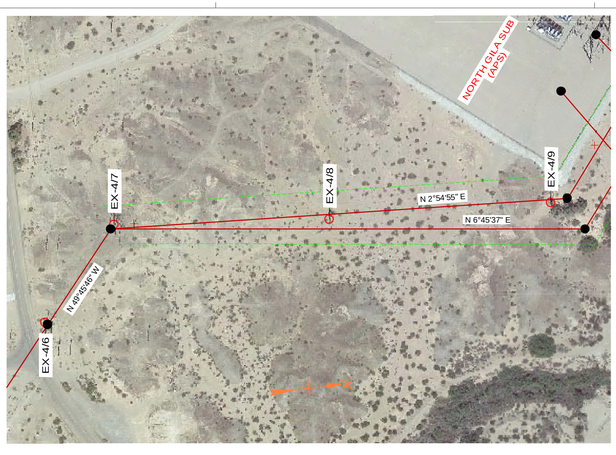

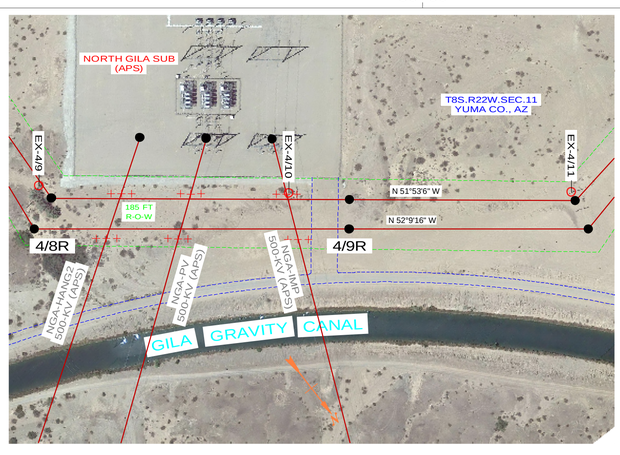

STA. 154+82 - STA. 205+35

PATH: S:\PROJECTS\TRANSMISSIONLINES\GILA_KNOB REBUILD 2015\PL\SCADD\XYZ\ GLA-KNB 4-7 TO 5-2.XYZ
PLS-CADD PROJECT LINE "EDIT" "REBUILD - MINUS APS CROSSINGS"
THIS SHEET GENERATED: 4/19/2016 - 8:14:27 PLS-CADD VERSION 14.20X64 - ATURNER

R-O-W EDGE
CENTERLINE
R-O-W EDGE

SCALE:
1" = 200' HORIZONTAL
0' 100' 200'
1" = 40' VERTICAL
0' 20' 40'

PLS-CADD SIGN CONVENTION:
( ) UNSIGNED: RT AH (-) NEG. SIGN: LT AH

COORDINATES AND BEARINGS ARE BASED ON THE
ARIZONA STATE PLANE COORDINATE
SYSTEM, WEST ZONE, NAD83 DATUM.
UNITS ARE US SURVEY FEET.

NESC LIGHT LOADING
COND. - 1272 KCMIL, 54/19 PHEASANT/ACSS/MA2
CURVE SHOWN AT 482 °F, FINAL CONDITIONS
[4/8-4/9] 1334 KCMIL, 54/19 MARTIN ACCR-T13
CURVE SHOWN AT 410 °F, FINAL CONDITIONS
OGW - 1/2-IN 7 STR. HS STEEL
OPGW - AFL CC-57-465
CURVE SHOWN AT 20 °F, INITIAL CONDITIONS

MAX. ACSS DESIGN OPERATING TEMP. = 482 °F
GROUND CLEARANCE = 24 FT. MINIMUM
+ / - 28 FT. SIDE PROFILES
LIDAR AND IMAGERY SEP. 2011

STRUCTURE RANGE, WIRE, RULING SPAN, INSTALLATION TENSION, DISPLAY CONDITION

4/8R - 4/9R, ACCR 1351-T13 (MARTIN ACCR) V2.WIR, RULING SPAN 832 (FT), TENSION 7000 (LBS) AT 60 (DEG F) INITIAL, DISPLAYED 410 °F = 210 °C MAX SAG FE
4/7 - 4/8R, PHEASANT_ACSS.WIR, RULING SPAN 1245 (FT), TENSION 8441 (LBS) AT 60 (DEG F) INITIAL, DISPLAYED 482 °F = 250 °C MAX SAG FE
4/9R - 4/10R, PHEASANT_ACSS.WIR, RULING SPAN 631 (FT), TENSION 8492 (LBS) AT 60 (DEG F) INITIAL, DISPLAYED 482 °F = 250 °C MAX SAG FE
4/10R - 5/2, PHEASANT_ACSS.WIR, RULING SPAN 579 (FT), TENSION 8513 (LBS) AT 60 (DEG F) INITIAL, DISPLAYED 482 °F = 250 °C MAX SAG FE
4/7 - 4/8R, 1_2-7_STRAND_HS_STEEL.WIR, RULING SPAN 1255 (FT), TENSION 2500 (LBS) AT 60 (DEG F) INITIAL, DISPLAYED 30 °F AAMT INITIAL FE
4/9R - 4/10R, 1_2-7_STRAND_HS_STEEL.WIR, RULING SPAN 637 (FT), TENSION 3000 (LBS) AT 60 (DEG F) INITIAL, DISPLAYED 30 °F AAMT INITIAL FE
4/10R - 5/2, 1_2-7_STRAND_HS_STEEL.WIR, RULING SPAN 584 (FT), TENSION 3000 (LBS) AT 60 (DEG F) INITIAL, DISPLAYED 30 °F AAMT INITIAL FE

* DESIGNED FOR 230-KV

A	4/15/16 A7-AFT	ADDED CENTERLINE BEARINGS AND MOVED STRUCTURES 4/7, 5/1 AND 5/2.

UNITED STATES DEPARTMENT OF ENERGY
WESTERN AREA POWER ADMINISTRATION
HEADQUARTERS - LAKEWOOD, COLORADO

GILA - KNOB
161-KV TRANSMISSION LINE
ARIZONA
PLAN AND PROFILE
STR. 4/8R TO STR. 4/10R

DESIGNED ALLEN TURNER
APPROVED STEVE ROCK
ELECTRICAL ENGINEERING MANAGER

MARCH 25, 2016	GLA-KNB	4208

GLA-KNB 4-7 TO 5-2.XYZ
PLS

STRUCTURE TYPE [IF SPECIFIC STRU. NO.]	INSULATOR ASSY'S SI11-B	T21-C	SP-2	OGW ASSY'S. OGW-SL	OGW-TV	OPGW ASSY'S. OPGW-SL	OPGW-TV	NOTE(S)
266M [4/8L, 4/9L, 4/10L]	3	6					2	1; 2; 4; 5; 7
266M [4/10R]	3	6			2			1; 2; 5; 7
266M [4/8R 4/9R]	3	6			1			1; 2; 4; 5; 7
281N		9	3		3		1	1; 2; 3; 7; 8
281S	6			1		1		1; 5; 6

NOTES

1. ALL QUANTITIES ARE ON A PER STRUCTURE BASIS.
2. ULTIMATE INSULATOR ASSEMBLY STRENGTH = 40,000 POUNDS FOR TYPE T21-C.
3. THREE (3) INSULATOR ASSEMBLIES SHALL BE SUITABLE FOR 300 KCMIL ANACONDA TYPE 178R2 COPPER WITH STRAIN CLAMP-TYPE TERMINALS.
4. THREE (3) INSULATOR ASSEMBLIES SHALL BE SUITABLE FOR 1334 KCMIL, 54/19 MARTIN ACCR-T13. COMPRESSION DEADENDS ARE GOVERNMENT-FURNISHED.
5. ULTIMATE INSULATOR ASSEMBLY STRENGTH = 20,000 POUNDS FOR TYPE SI-11B.
6. ULTIMATE ASSEMBLY STRENGTH = 15,000 POUNDS FOR TYPES OGW-SL AND OPGW-SL.
7. ULTIMATE ASSEMBLY STRENGTH = 20,000 POUNDS FOR TYPES OGW-TV AND OPGW-TV.
8. STATION POST JUMPER INSULATOR CHARACTERISTICS:
   MINIMUM DRY ARC LENGTH
   (WITH GRADING RING) = 81.7 IN.
   MINIMUM SECTION LENGTH = 90.8 IN.
   MINIMUM LEAKAGE DIST. = 221.3 IN.
   MINIMUM 60-HZ WET FLASHOVER = 565-KV
   MINIMUM POSITIVE CRITICAL
   IMPULSE FLASHOVER = 1265-KV

REFERENCE DRAWINGS

OVERHEAD GROUND WIRE ASSEMBLIES
STEEL AND CONCRETE POLE STRUS. _____ 41 1018
SUSPENSION INSULATOR ASSEMBLIES
SINGLE STRING _____ 41 1020
TENSION INSULATOR ASSEMBLIES
DOUBLE STRING _____ 41 1023
OPTICAL GROUND WIRE ASSEMBLIES _____ 41 1031
STATION POST JUMPER INSULATOR ASSEMBLIES _____ 41 1033

* DESIGNED FOR 230-KV

UNITED STATES DEPARTMENT OF ENERGY
WESTERN AREA POWER ADMINISTRATION
HEADQUARTERS - LAKEWOOD, COLORADO

GILA - KNOB
161-KV TRANSMISSION LINE
ARIZONA

MATERIAL QUANTITIES

DESIGNED ALLEN TURNER APPROVED STEVE ROCK
ELECTRICAL ENGINEERING MANAGER

C A F	MARCH 25, 2016	GLA-KNB	1004

Plotted By: lampman Mar 25, 2016- 11:50am
XREFS:
S:\projects\TransmissionLines\Gila_Knob.Rebuild.2015\Drawings\DesignDrawings\xDwgsReadyForFinal\Scripts\gla_knb_1004.dwg Last Saved By: Lampman, Eva (CONTR) on 3/25/2016 11:50 AM

RULING SPAN (FEET)	SPAN LENGTH RANGE (FEET)	NUM. OF SPANS	NUM. OF WIRES	FROM STRUCTURE	TO STRUCTURE	NESC LIGHT INITIAL TENSION (LBS)	30 °F INITIAL TENSION (LBS)	30 °F FINAL TENSION (LBS)	60 °F FINAL TENSION (LBS)	NUMBER OF DAMPERS REQUIRED	K (IN)	L (IN)	M (IN)	DAMPER PART NUMBER	DAMPER ASSEMBLY WEIGHT (LBS)
1272 KCMIL PHEASANT/ACSS/MA2 (STANDARD-STRENGTH CORE ACSS)															
1205		1	3	4/7	4/8 L	10135	8887	8887	7784						
1237		1	3	4/7	4/8 R	10143	8871	8871	7797						
596		1	3	4/9 L	4/10 L	9914	9309	9309	7431						
631		1	3	4/9 R	4/10 R	9895	9349	9349	7427						
558	(545-570)	2	3	4/10 L	5/2	9932	9279	9279	7441						
573	(533-605)	2	3	4/10 R	5/2	9904	9337	9337	7428						
1331 KCMIL MARTIN/ACCR (ALUMINUM CONDUCTOR COMPOSITE REINFORCED)															
788		1	3	4/8 L	4/9 L	12261	10980	10717	8384						
832		1	3	4/8 R	4/9 R	9082	7626	7458	6498						
1/2-INCH 7 STRAND HIGH STRENGTH STEEL															
1247		1	1	4/7	4/8 R	3337	2614	2614	2514						
638		1	1	4/9 R	4/10 R	3827	3341	3341	2952						
578	(536-613)	2	1	4/10 R	5/2	3814	3376	3376	2950						
0.465-INCH AFL CENTRA-CORE 48-FIBER OPGW															
1195		1	1	4/7	4/8 L	3410	2443	2358	2078						
781		1	1	4/8 L	4/9 L	2615	1884	1826	1545						
590		1	1	4/9 L	4/10 L	3108	2630	2551	1870						
553	(542-564)	2	1	4/10 L	5/2	3091	2651	2577	1858						

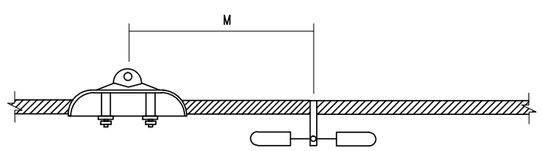

CONDUCTOR IN SUSPENSION

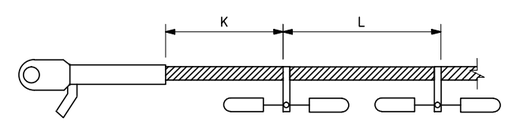

CONDUCTOR IN TENSION AT BOTH ENDS OF SPAN

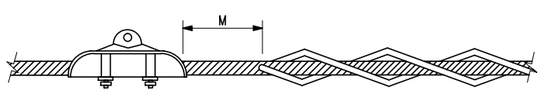

OGW OR OPGW IN SUSPENSION

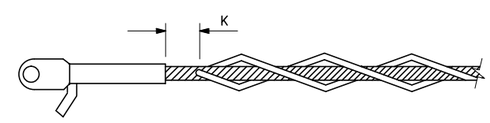

OGW OR OPGW IN TENSION AT BOTH ENDS OF SPAN

NOTES

1. THE AVERAGE ANNUAL MINIMUM TEMPERATURE FOR THE LINE IS 30 °F.
2. THE AVERAGE TEMPERATURE OF THE COLDEST MONTH FOR THE LINE IS 55 °F.
3. THE TENSIONS ARE CALCULATED UNDER NESC LIGHT LOADING CONDITIONS.

* DESIGNED FOR 230-KV

UNITED STATES DEPARTMENT OF ENERGY
WESTERN AREA POWER ADMINISTRATION
HEADQUARTERS - LAKEWOOD, COLORADO

GILA - KNOB
161-KV TRANSMISSION LINE
ARIZONA

VIBRATION DAMPERS

DESIGNED ALLEN TURNER APPROVED STEVE ROCK
ELECTRICAL ENGINEERING MANAGER

C A F	MARCH 25, 2016	GLA-KNB	1005

Plotted By: lampman Mar 25, 2016- 11:50am
IMAGES:
S:\projects\TransmissionLines\Gila_Knob_Rebuild_2015\Drawings\DesignDrawings\DwgsReadyForFinal\Scripts\gla_knb_1005.dwg Last Saved By: Lampman, Eva (CONTR) on 3/25/2016 11:50 AM

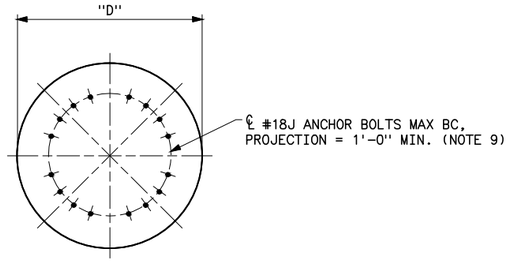

PLAN

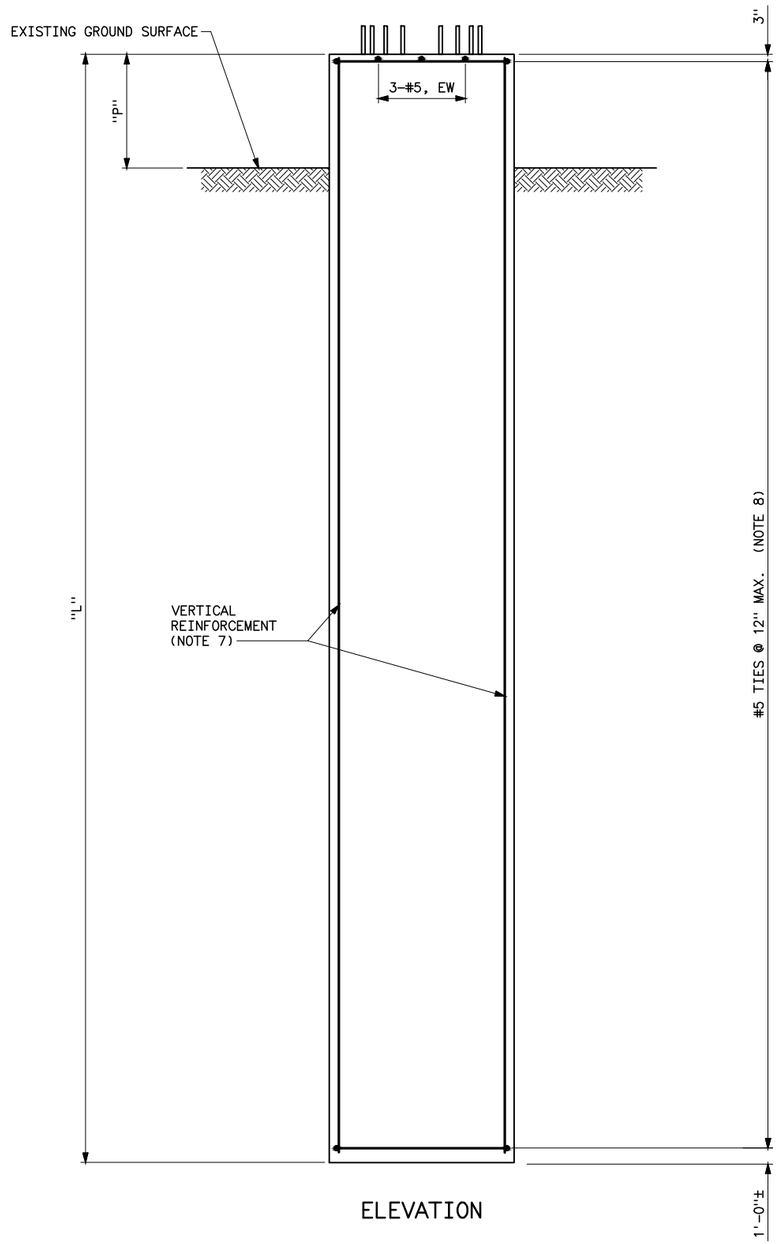

ELEVATION

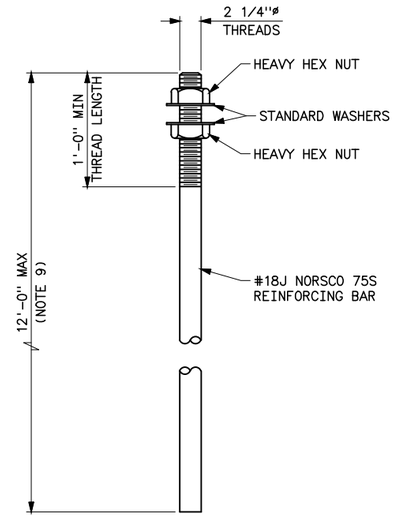

ANCHOR BOLT
(NOTE 9)

NOTES

1. CEMENT: ASTM C 150 TYPE IIA CEMENT
2. CONCRETE COMPRESSIVE STRENGTH:
   F'c=4000 PSI AT 28 DAYS.
3. WATER-CEMENT RATIO: NET WATER-CEMENT RATIO, EXCLUSIVE OF WATER ABSORBED BY THE AGGREGATE, SHALL NOT EXCEED 0.45 BY WEIGHT.
4. REINFORCING BAR ANCHOR BOLTS: Fy=75,000 PSI
   OTHER REINFORCEMENT: Fy=60,000 PSI
5. NO WELDING SHALL BE PERMITTED UNLESS APPROVED BY WESTERN.
6. CONSTRUCTION JOINTS SUBJECT TO WESTERN'S APPROVAL.
7. MINIMUM EDGE DISTANCE FOR VERTICAL REINFORCEMENT SHALL BE 6". MAINTAIN SUFFICIENT CLEARANCE BETWEEN VERTICAL REINFORCEMENT AND ANCHOR BOLT CAGES FOR MAXIMUM AGGREGATE SIZE. "Y" INDICATES LENGTH OF VERTICAL REINFORCEMENT.
8. MINIMUM LAP LENGTH FOR #5 TIES SHALL BE 20".
9. ANCHOR BOLT CAGES FURNISHED BY STEEL POLE SUPPLIER. ANCHOR BOLT QUANTITIES AND WEIGHTS LISTED IN TABLE ARE APPROXIMATE.
10. SEE PLAN AND PROFILE DRAWINGS FOR FOUNDATION LOCATIONS (STATIONS).

REFERENCE DRAWING

266M POLE STRUCTURES -
OUTLINE AND DESIGN LOADS_ _ _ _ _ _ _ _43-266M 2200

EXPLANATION

INDICATES MODIFICATIONS TO 230KV TRANSMISSION LINE REBUILD PHASE I WORK

FOUNDATION DATA

STR NO.	QTY REQ'D	STR TYPE	STATION (NOTE 10)	"D" (FT-IN)	"L" (FT)	"P" (FT)	MAX. BC (IN)	VERTICAL REINFORCEMENT (NOTE 7)			#5 TIES (NO.)	UNIT QUANTITIES					
								BAR SIZE	NO.	"Y" (FT)		AUGER EXCAVATION (LIN FT)	CONCRETE VOLUME (CU YD)	#18J ANCHOR BOLTS (NOTE 9) NO.	#18J ANCHOR BOLTS (NOTE 9) CAGE WT. (LB)	VERTICAL REINFORCEMENT (LB)	#5 TIES (LB)
4/8 L	2	266M-65	73+45	8'-0"	26'-6"	2'-0"	65"	#10	56	25'-6"	27	24'-6"	49.3	24	4800	6150	680
4/8 R	2	266M-80	170+19	8'-0"	26'-6"	2'-0"	65"	#10	56	25'-6"	27	24'-6"	49.3	24	4800	6150	680
4/9 L	2	266M-45	81+33	7'-0"	27'-0"	2'-0"	54"	#10	38	26'-0"	27	25'-0"	38.5	16	3200	4260	590
4/9 R	2	266M-45	178+51	7'-0"	27'-0"	2'-0"	54"	#10	38	26'-0"	27	25'-0"	38.5	16	3200	4260	590
4/10 L	2	266M-50	87+29	7'-6"	27'-6"	2'-0"	56"	#10	42	26'-6"	28	25'-6"	45.0	16	3200	4800	660
4/10 R	2	266M-55	184+82	7'-6"	27'-6"	2'-0"	59"	#10	42	26'-6"	28	25'-6"	45.0	16	3200	4800	660

A	4-15-16 A7-BEP	REVISED PER STEEL POLE MANUFACTURER INFORMATION.

UNITED STATES DEPARTMENT OF ENERGY
WESTERN AREA POWER ADMINISTRATION
CORPORATE SERVICES OFFICE - LAKEWOOD, COLORADO

GILA-KNOB
230KV TRANSMISSION LINE
ARIZONA

TYPE 266M STEEL POLE STRUCTURES
FOUNDATIONS

DESIGNED B.E. PERRY APPROVED DOUG HANSON CIVIL ENGINEERING MANAGER

CAD	April 15, 2016	GLA-KNB	2101

Plotted By: lampman Apr 15, 2016- 11:30am
IMAGES:
S:\Projects\TransmissionLines\Gila_Knob_Rebuild_2015\Drawings\Final\gla_knb_2101a.dwg Last Saved By: Lampman, Eva (CONTR) on 4/15/2016 11:29 AM

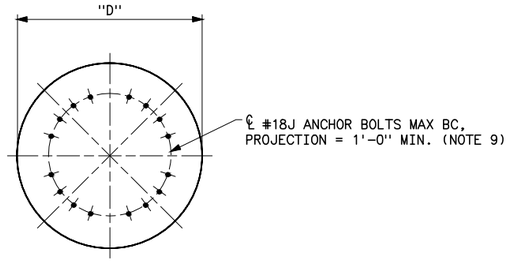

PLAN

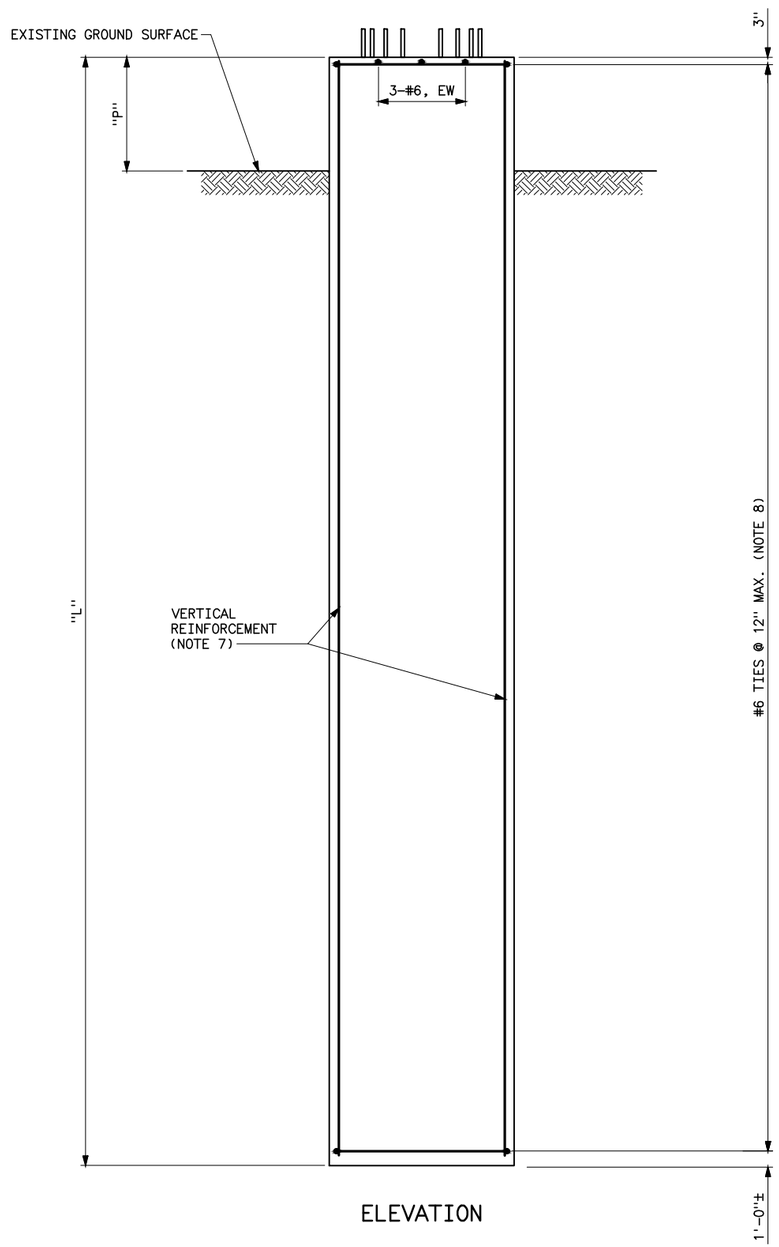

ELEVATION

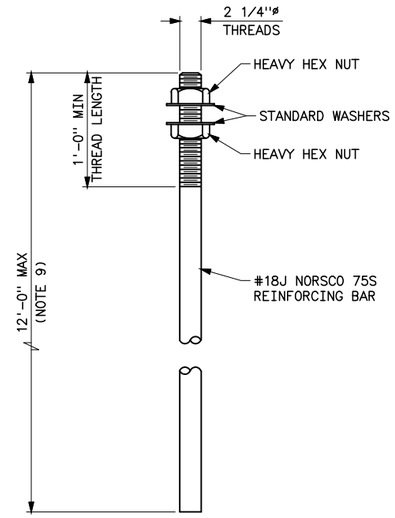

ANCHOR BOLT
(NOTE 9)

NOTES

1. CEMENT: ASTM C 150 TYPE IIA CEMENT
2. CONCRETE COMPRESSIVE STRENGTH:
   F'c=4000 PSI AT 28 DAYS.
3. WATER-CEMENT RATIO: NET WATER-CEMENT RATIO, EXCLUSIVE OF WATER ABSORBED BY THE AGGREGATE, SHALL NOT EXCEED 0.45 BY WEIGHT.
4. REINFORCING BAR ANCHOR BOLTS: Fy=75,000 PSI
   OTHER REINFORCEMENT: Fy=60,000 PSI
5. NO WELDING SHALL BE PERMITTED UNLESS APPROVED BY WESTERN.
6. CONSTRUCTION JOINTS SUBJECT TO WESTERN'S APPROVAL.
7. MINIMUM EDGE DISTANCE FOR VERTICAL REINFORCEMENT SHALL BE 6". MAINTAIN SUFFICIENT CLEARANCE BETWEEN VERTICAL REINFORCEMENT AND ANCHOR BOLT CAGES FOR MAXIMUM AGGREGATE SIZE. "Y" INDICATES LENGTH OF VERTICAL REINFORCEMENT.
8. MINIMUM LAP LENGTH FOR #5 TIES SHALL BE 20".
9. ANCHOR BOLT CAGES FURNISHED BY STEEL POLE SUPPLIER. ANCHOR BOLT QUANTITIES AND WEIGHTS LISTED IN TABLE ARE APPROXIMATE.
10. SEE PLAN AND PROFILE DRAWINGS FOR FOUNDATION LOCATIONS (STATIONS).

REFERENCE DRAWING

281N STEEL POLE STRUCTURES -
OUTLINE AND DESIGN LOADS_ _ _ _ _ _ _ _43-281N 2200A
281S POLE STRUCTURES -
OUTLINE AND DESIGN LOADS_ _ _ _ _ _ _ _43-281S 2200

FOUNDATION DATA

STR NO.	QTY REQ'D	STR TYPE	STATION (NOTE 10)	"D" (FT-IN)	"L" (FT)	"P" (FT)	MAX. BC (IN)	VERTICAL REINFORCEMENT (NOTE 7)			#6 TIES (NO.)	UNIT QUANTITIES					
												AUGER EXCAVATION (LIN FT)	CONCRETE VOLUME (CU YD)	#18J ANCHOR BOLTS (NOTE 9)		VERTICAL REINFORCEMENT (LB)	#6 TIES (LB)
								BAR SIZE	NO.	"Y" (FT)				NO.	CAGE WT. (LB)		
4/7	1	281N-70	61+46	10'-0"	44'-6"	2'-0"	88"	#11	60	43'-6"	45	42'-6"	129.5	40	8000	13870	2050
5/1	1	281S-50	92+99	6'-6"	24'-0"	2'-0"	47"	#11	22	23'-0"	24	22'-0"	29.5	12	2400	2690	700
5/2	1	281N-50	98+38	9'-6"	40'-6"	2'-0"	79"	#11	56	39'-6"	41	38'-6"	106.4	36	7200	11800	1760

UNITED STATES DEPARTMENT OF ENERGY
WESTERN AREA POWER ADMINISTRATION
CORPORATE SERVICES OFFICE - LAKEWOOD, COLORADO

GILA-KNOB
230KV TRANSMISSION LINE
ARIZONA

TYPE 281N & 281S STEEL POLE STRUCTURES
FOUNDATIONS

DESIGNED B.E. PERRY APPROVED DOUG HANSON
CIVIL ENGINEERING MANAGER

CAE	March 25, 2016	GLA-KNB	2102

Plotted By: lampman Mar 25, 2016- 9:26am
PWACS:
S:\Projects\TransmissionLines\Gila_Knob.Rebuild.2015\Drawings\DesignDrawings\xDwgsReadyForFinal\Scripts\gla_knb_2102.dwg Last Saved By: Lampman, Eva (CONTR) on 3/25/2016 9:26 AM

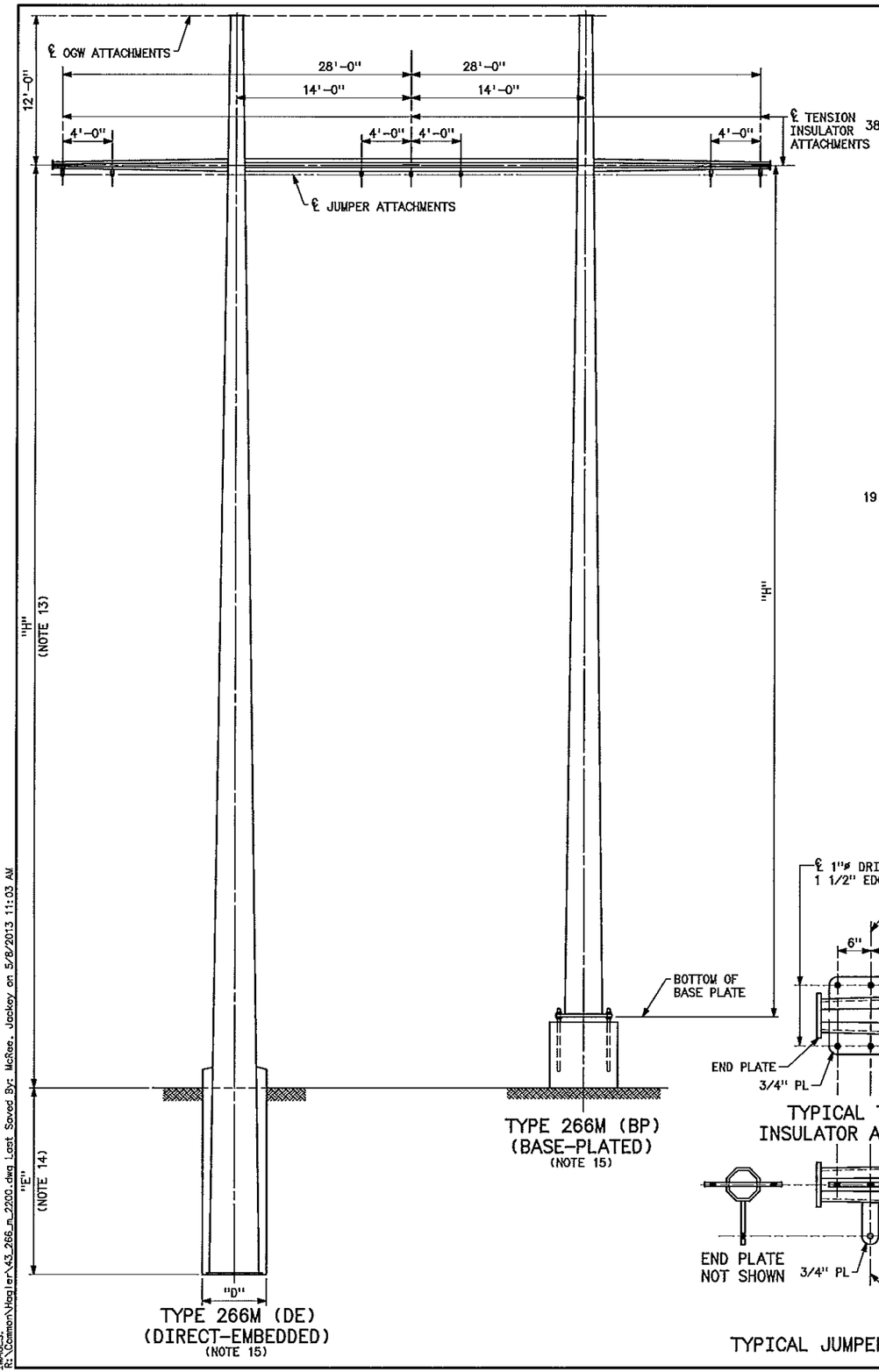

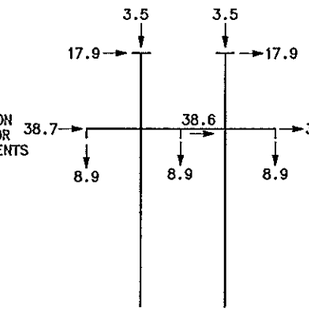

CASE A – NESC HEAVY INTACT
90° LINE ANGLE
WIND ON STRUCTURE = 10 PSF
DEAD LOAD OF STRUCTURE x 1.5

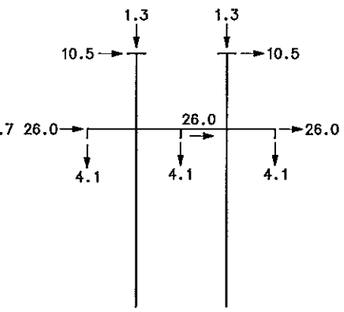

CASE B – HIGH WIND INTACT
90° LINE ANGLE
WIND ON STRUCTURE = 31 PSF
DEAD LOAD OF STRUCTURE x 1.15

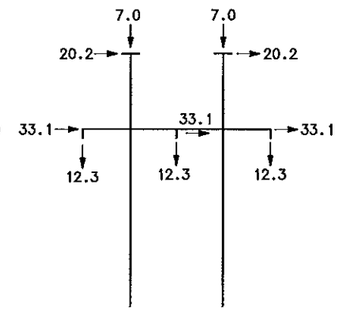

CASE C – RIME ICE INTACT
90° LINE ANGLE
WIND ON STRUCTURE = 5 PSF
DEAD LOAD OF STRUCTURE x 1.1

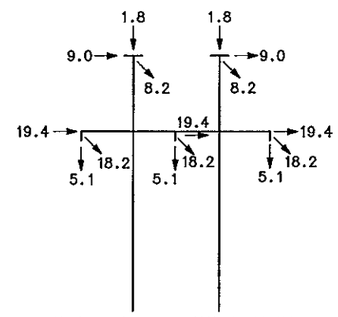

CASE D – NESC HEAVY DEADEND
90° LINE ANGLE
WIND ON STRUCTURE = 10 PSF
DEAD LOAD OF STRUCTURE x 1.5

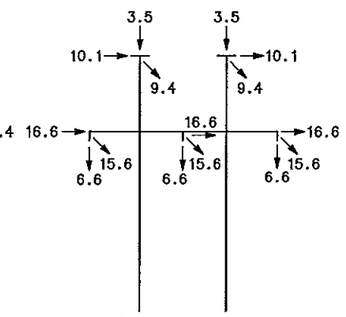

CASE E – RIME ICE DEADEND
90° LINE ANGLE
WIND ON STRUCTURE = 5 PSF
DEAD LOAD OF STRUCTURE x 1.1

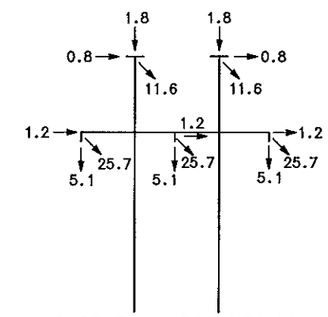

CASE F – NESC HEAVY DEADEND
0° LINE ANGLE
WIND ON STRUCTURE = 10 PSF
DEAD LOAD OF STRUCTURE x 1.5

NOTES

1. LOADS ARE ULTIMATE VALUES AND INCLUDE OVERLOAD FACTORS.
2. WIRE LOADS ARE IN KIPS AND ARE TOTAL FOR ALL SPANS.
3. STRUCTURE AND ATTACHMENTS SHALL BE DESIGNED FOR THE SIMULTANEOUS APPLICATION OF DEAD LOAD, WIND ON THE STRUCTURE, AND WIRE LOADS FOR EACH LOADING CASE.
4. STRUCTURE SHALL BE DESIGNED SELF SUPPORTING; GUYS ARE NOT PERMITTED.
5. WIND PRESSURE SHOWN ON LOADING DIAGRAMS ARE BASED ON A SHAPE FACTOR OF 1.0 FOR CIRCULAR SECTIONS. FOR SECTIONS OTHER THAN CIRCULAR, MULTIPLY THE PRESSURES BY THE FOLLOWING SHAPE FACTORS:
   ELLIPTICAL=1.2 (MAJOR AXIS)
   0.9 (MINOR AXIS)
   12-SIDED=1.1
   8-SIDED=1.4
   6-SIDED=1.4
   4-SIDED=2.0
6. DESIGN LOADS ARE BASED ON 1272 KCM ACSR 45/7 "BITTERN" CONDUCTOR AND 1/2#, 7-STRAND, HIGH-STRENGTH STEEL OVERHEAD GROUND WIRES.
7. SUM OF ADJACENT SPANS ..... 2400 FT
8. LOW POINT DISTANCE ..... 2000 FT
9. LINE ANGLE ..... 0-90°
10. NESC HEAVY: 1/2" RADIAL ICE, 4 PSF WIND AT 0°F.
    RULING SPAN ..... 1000 FT
    TENSIONS: CONDUCTOR ..... 15,570 LB
    OGW ..... 7000 LB
11. HIGH WIND: 100 MPH 3-SECOND GUST AT 60°F IN ACCORDANCE WITH NESC C2-2012.
    TENSIONS: CONDUCTOR ..... 13,500 LB
    OGW ..... 5500 LB
    WIND ON WIRES ..... 26 PSF
12. RIME ICE: 1 1/2" RADIAL RIME (40 PCF), 4 PSF WIND AT 30°F.
    TENSIONS: CONDUCTOR ..... 20,000 LB
    OGW ..... 12,000 LB
13. "H" INDICATES HEIGHT PORTION OF POLE STRUCTURE DESIGNATIONS LISTED IN SPECIFICATIONS.
14. CONTRACTOR SHALL DETERMINE EMBEDMENT DEPTH "E" AND AUGER DIAMETER "D" BASED ON CRITERIA IN SPECIFICATIONS.
15. (DE) IN THE POLE STRUCTURE DESIGNATION INDICATES THAT BOTH POLES ARE DIRECT-EMBEDDED. (BP) IN THE POLE STRUCTURE DESIGNATION INDICATES THAT BOTH POLES ARE BASE-PLATED.

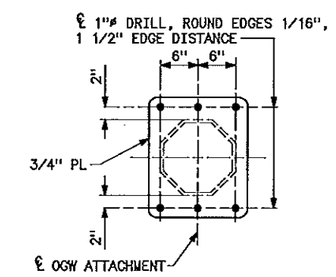

TYPICAL OGW ATTACHMENT

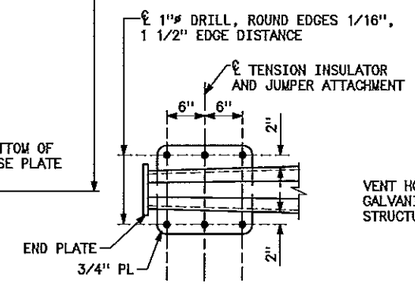

TYPICAL TENSION INSULATOR ATTACHMENT

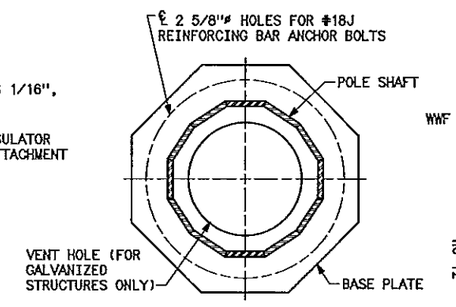

SECTION A-A

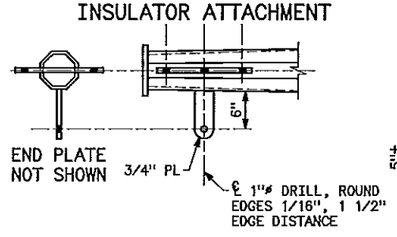

TYPICAL JUMPER ATTACHMENT

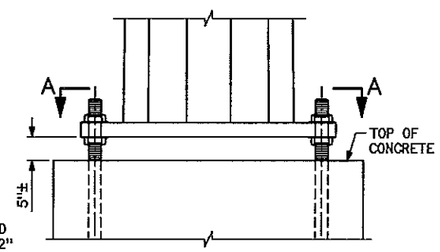

TYPE 266M (BP)
BASE DETAIL

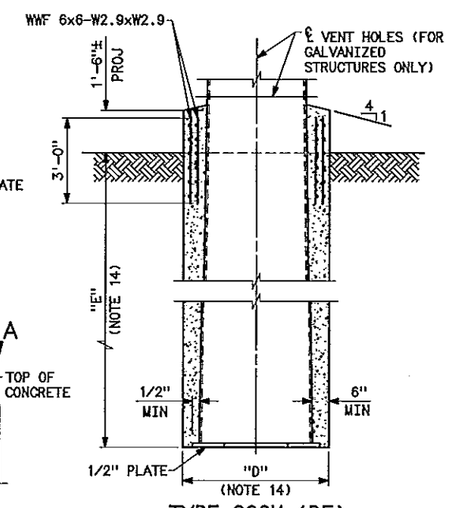

TYPE 266M (DE)
BASE DETAIL

UNITED STATES DEPARTMENT OF ENERGY
WESTERN AREA POWER ADMINISTRATION
CORPORATE SERVICES OFFICE – LAKEWOOD, COLORADO

TRANSMISSION LINE STRUCTURE
266M POLE STRUCTURES
OUTLINE AND DESIGN LOADS

DESIGNED BOBBY HAGLER APPROVED DOUG HANSON CIVIL ENGINEERING MANAGER

CAE	FEBRUARY 1, 2013	43-266M	2200

Plotted By: Amcree on 8/9/2006 9:17 AM
IMAGES:
R:\Common\Hagler\43_266_m_2200.dwg Last Saved By: McRae, Jackey on 5/8/2013 11:03 AM

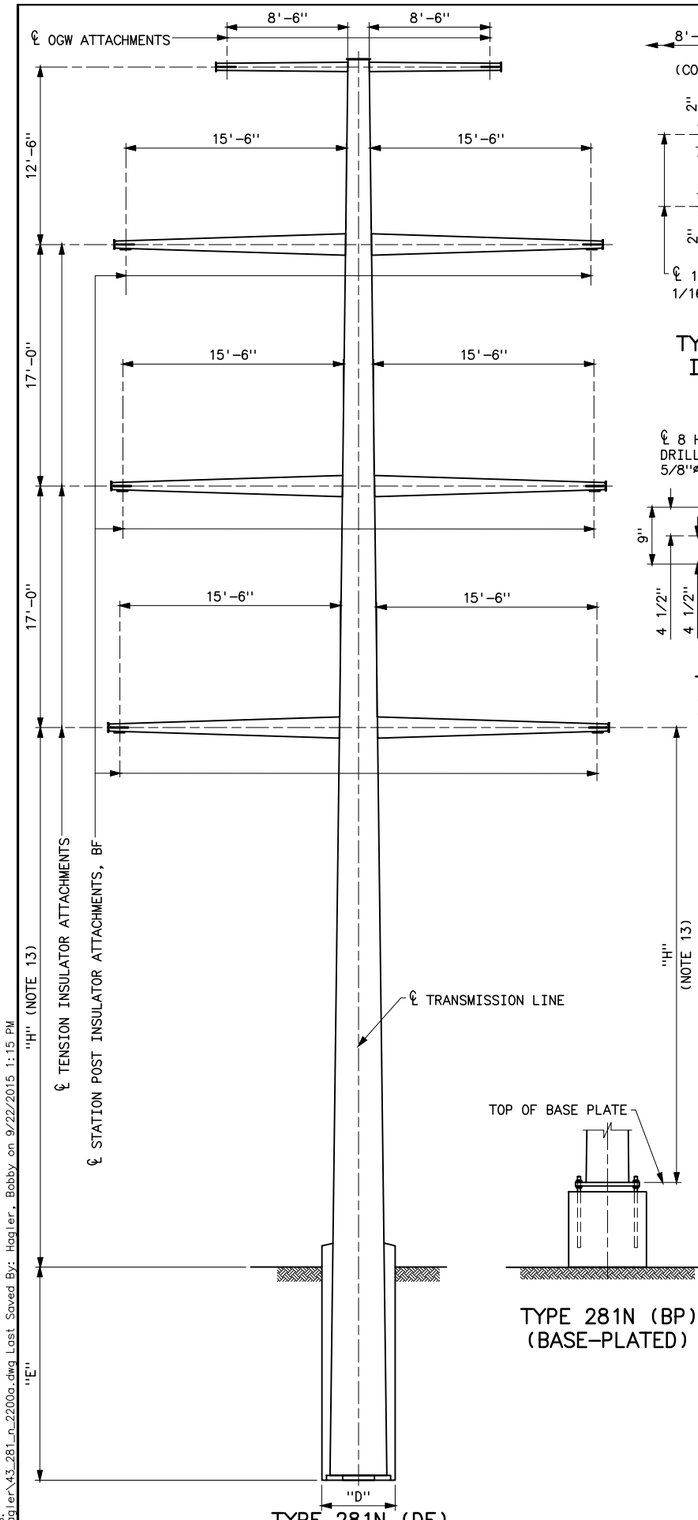

TYPE 281N (DE)
(DIRECT-EMBEDDED)

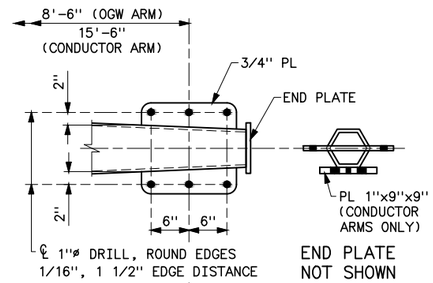

TYPICAL OGW AND TENSION
INSULATOR ATTACHMENTS

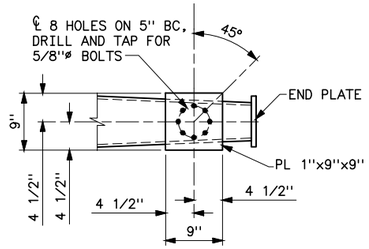

TYPICAL STATION POST
INSULATOR ATTACHMENT
(CONDUCTOR ARM ONLY)

TYPE 281N (BP)
(BASE-PLATED)

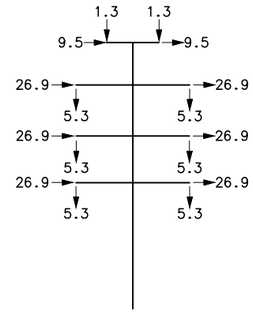

CASE A – NESC
LIGHT INTACT
95° LINE ANGLE
WIND ON STRUCTURE = 22.5 PSF
DEAD LOAD OF STRUCTURE x 1.5

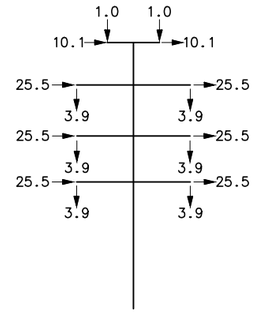

CASE B – HIGH
WIND INTACT
95° LINE ANGLE
WIND ON STRUCTURE = 31 PSF
DEAD LOAD OF STRUCTURE x 1.1

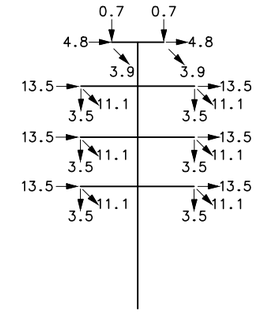

CASE C – NESC LIGHT
DEADEND
95° LINE ANGLE
WIND ON STRUCTURE = 22.5 PSF
DEAD LOAD OF STRUCTURE x 1.5

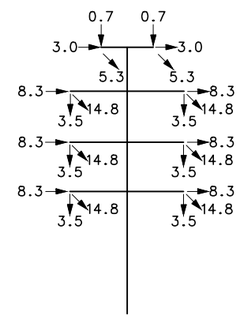

CASE D – NESC LIGHT
DEADEND
50° LINE ANGLE
WIND ON STRUCTURE = 22.5 PSF
DEAD LOAD OF STRUCTURE x 1.5

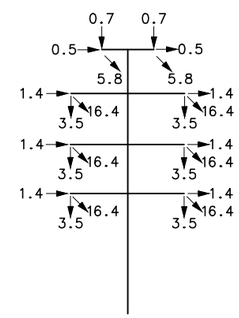

CASE E – NESC LIGHT
DEADEND
0° LINE ANGLE
WIND ON STRUCTURE = 22.5 PSF
DEAD LOAD OF STRUCTURE x 1.5

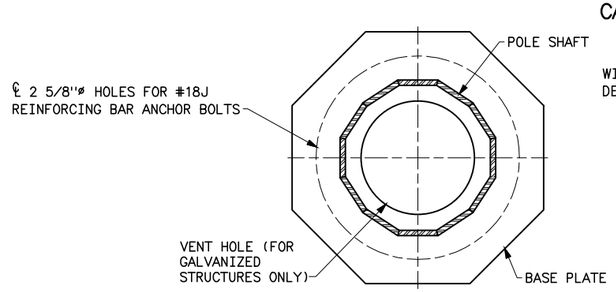

SECTION A–A

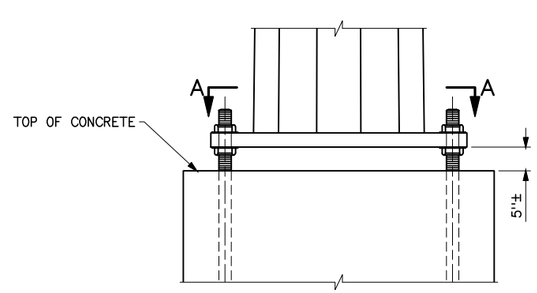

TYPE 281N (BP)
BASE DETAIL

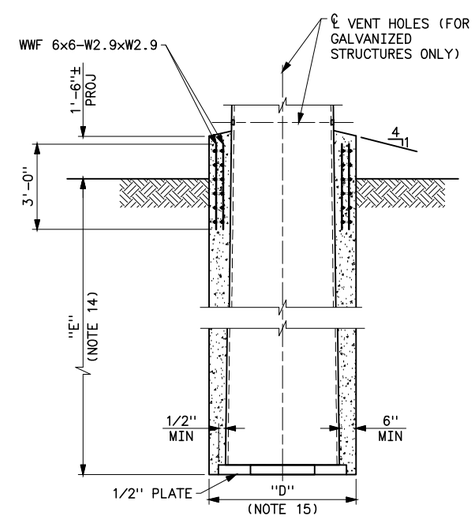

TYPE 281N (DE)
BASE DETAIL

NOTES

1. LOADS ARE ULTIMATE VALUES AND INCLUDE OVERLOAD FACTORS.
2. WIRE LOADS ARE IN KIPS AND ARE TOTAL FOR ALL SPANS.
3. STRUCTURE AND ATTACHMENTS SHALL BE DESIGNED FOR THE SIMULTANEOUS APPLICATION OF DEAD LOAD, WIND ON THE STRUCTURE, AND WIRE LOADS FOR EACH LOADING CASE.
4. STRUCTURE SHALL BE DESIGNED SELF SUPPORTING; GUYS ARE NOT PERMITTED.
5. WIND PRESSURE SHOWN ON LOADING DIAGRAMS ARE BASED ON A SHAPE FACTOR OF 1.0 FOR CIRCULAR SECTIONS. FOR SECTIONS OTHER THAN CIRCULAR, MULTIPLY THE PRESSURES BY THE FOLLOWING SHAPE FACTORS:
   ELLIPTICAL=1.2 (MAJOR AXIS)
   0.9 (MINOR AXIS)
   16-SIDED=1.0
   12-SIDED=1.1
   8-SIDED=1.4
   6-SIDED=1.4
   4-SIDED=2.0
6. DESIGN LOADS ARE BASED ON 1272 KCMIL ACSS 54/19 "PHEASANT" CONDUCTOR AND 1/2ø, 7-STRAND, HIGH-STRENGTH STEEL OVERHEAD GROUND WIRES.
7. SUM OF ADJACENT SPANS_____2150 FT
8. LOW POINT DISTANCE_____1500 FT
9. LINE ANGLE_____50-95°
10. RULING SPAN_____1000 FT
11. NESC LIGHT: 0 RADIAL ICE, 9 PSF WIND AT 30°F.
    TENSIONS: CONDUCTOR_____9900 LB
    OGW_____3500 LB
12. HIGH WIND: 100 MPH 3-SECOND GUST AT 60°F IN ACCORDANCE WITH NESC C2-2007.
    TENSIONS: CONDUCTOR_____13,500 LB
    OGW_____5400 LB
    WIND ON WIRES_____26 PSF
13. "H" INDICATES HEIGHT PORTION OF POLE STRUCTURE DESIGNATIONS LISTED IN SPECIFICATIONS.
14. CONTRACTOR SHALL DETERMINE EMBEDMENT DEPTH "E" BASED ON CRITERIA IN SPECIFICATIONS.
15. AUGER DIAMETER "D" SHALL BE MAXIMUM POLE BASE DIAMETER PLUS 1 FOOT.

A	9-22-15 A7-BGH	REVISED TITLE BLOCK. ADDED NOTE 15. REVISED "H" DIMENSION TO TOP OF BASE PLATE.

UNITED STATES DEPARTMENT OF ENERGY
WESTERN AREA POWER ADMINISTRATION
CORPORATE SERVICES OFFICE – LAKEWOOD, COLORADO

TRANSMISSION LINE STRUCTURES
281N STEEL POLE STRUCTURES
OUTLINE AND DESIGN LOADS

DESIGNED BOBBY HAGLER APPROVED DOUG HANSON
CIVIL ENGINEERING MANAGER

CAD	AUGUST 16, 2010	43-281N	2200

Plotted By:ohagler Sep 22, 2015- 1:15pm
IMAGES:
P:\ohagler\43_281_n_2200a.dwg Last Saved By: Hagler, Bobby on 9/22/2015 1:15 PM

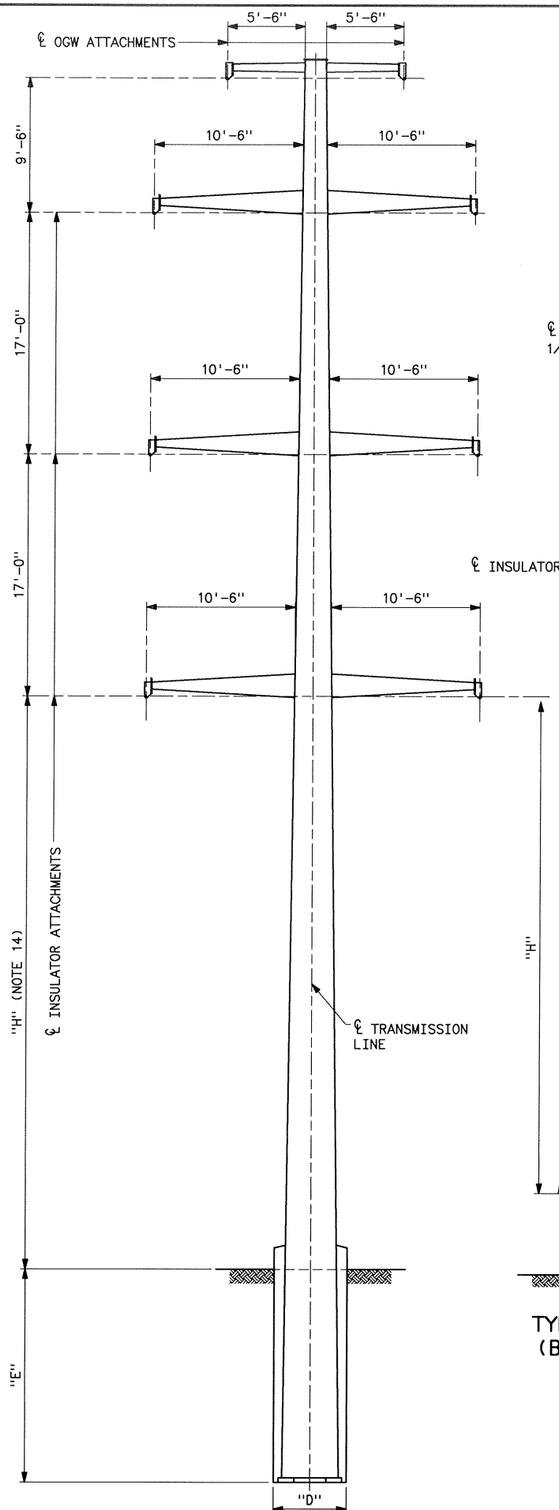

TYPE 281S (DE)
(DIRECT-EMBEDDED)

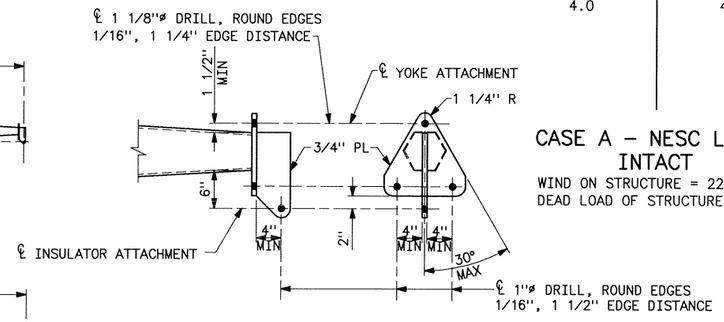

TYPICAL INSULATOR ATTACHMENT

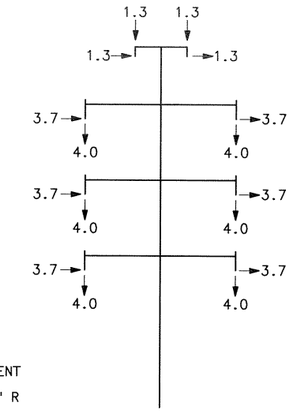

CASE A – NESC LIGHT INTACT

WIND ON STRUCTURE = 22.5 PSF
DEAD LOAD OF STRUCTURE x 1.5

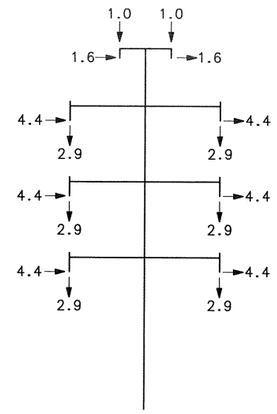

CASE B – HIGH WIND INTACT

WIND ON STRUCTURE = 31 PSF
DEAD LOAD OF STRUCTURE x 1.1

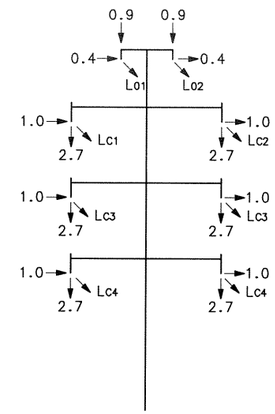

CASE C – LONGITUDINAL UNBALANCE

WIND ON STRUCTURE = 4 PSF
DEAD LOAD OF STRUCTURE x 1.0
CASE C1: $L_{c1}=L_{c2}=L_{c3}=L_{c4}=0$; $L_{01}=L_{02}=3.1$
CASE C2: $L_{01}=L_{02}=L_{c3}=L_{c4}=0$; $L_{c1}=L_{c2}=6.5$
CASE C3: $L_{01}=L_{02}=L_{c1}=L_{c2}=L_{c4}=0$; $L_{c3}=6.5$
CASE C4: $L_{01}=L_{02}=L_{c1}=L_{c2}=L_{c3}=0$; $L_{c4}=6.5$
CASE C5: $L_{01}=L_{c1}=L_{c3}=L_{c4}=0$; $L_{02}=3.1$; $L_{c2}=6.5$

NOTES

1. LOADS ARE ULTIMATE VALUES AND INCLUDE OVERLOAD FACTORS.
2. WIRE LOADS ARE IN KIPS AND ARE TOTAL FOR ALL SPANS.
3. STRUCTURE AND ATTACHMENTS SHALL BE DESIGNED FOR THE SIMULTANEOUS APPLICATION OF DEAD LOAD, WIND ON THE STRUCTURE, AND WIRE LOADS FOR EACH LOADING CASE.
4. STRUCTURE SHALL BE DESIGNED SELF SUPPORTING; GUYS ARE NOT PERMITTED.
5. WIND PRESSURE SHOWN ON LOADING DIAGRAMS ARE BASED ON A SHAPE FACTOR OF 1.0 FOR CIRCULAR SECTIONS. FOR SECTIONS OTHER THAN CIRCULAR, MULTIPLY THE PRESSURES BY THE FOLLOWING SHAPE FACTORS:
   ELLIPTICAL=1.2 (MAJOR AXIS)
   0.9 (MINOR AXIS)
   16-SIDED=1.0
   12-SIDED=1.1
   8-SIDED=1.4
   6-SIDED=1.4
   4-SIDED=2.0
6. DESIGN LOADS ARE BASED ON 1272 KCMIL ACSS 54/19 "PHEASANT" CONDUCTOR AND 1/2ø, 7-STRAND, HIGH-STRENGTH STEEL OVERHEAD GROUND WIRES.
7. SUM OF ADJACENT SPANS _____ 2150 FT
8. LOW POINT DISTANCE _____ 1500 FT
9. LINE ANGLE _____ 0-3°
10. RULING SPAN _____ 1000 FT
11. NESC LIGHT: 0 RADIAL ICE, 9 PSF WIND AT 30°F.
    TENSIONS: CONDUCTOR _____ 9900 LB
    OGW _____ 3500 LB
12. HIGH WIND: 100 MPH 3-SECOND GUST AT 60°F IN ACCORDANCE WITH NESC C2-2007.
    TENSIONS: CONDUCTOR _____ 13,500 LB
    OGW _____ 5400 LB
    WIND ON WIRES _____ 26 PSF
13. LONGITUDINAL UNBALANCE: 0 RADIAL ICE, 4 PSF WIND AT 30°F.
    TENSIONS: CONDUCTOR _____ 9200 LB
    OGW _____ 3100 LB
14. "H" INDICATES HEIGHT PORTION OF POLE STRUCTURE DESIGNATIONS LISTED IN SPECIFICATIONS.
15. CONTRACTOR SHALL DETERMINE EMBEDMENT DEPTH "E" AND AUGER DIAMETER "D" BASED ON CRITERIA IN SPECIFICATIONS.

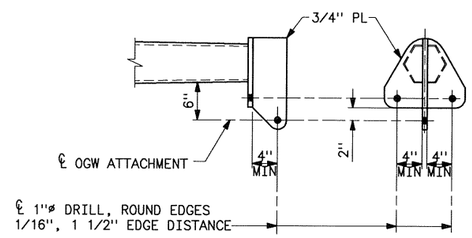

TYPICAL OGW ATTACHMENT

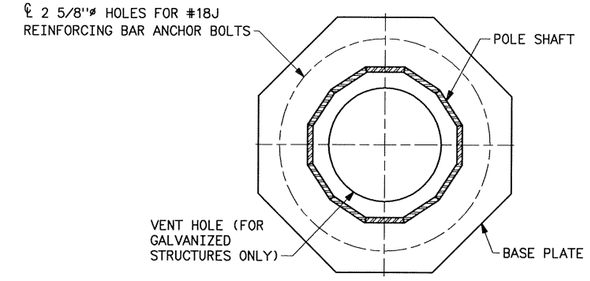

SECTION A–A

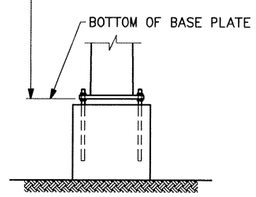

TYPE 281S (BP)
(BASE-PLATED)

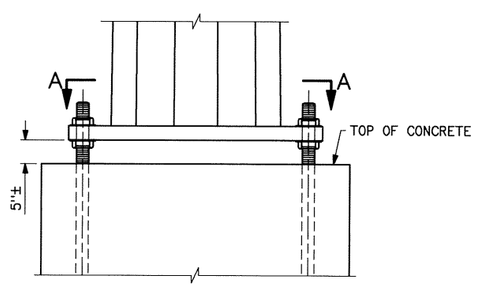

TYPE 281S (BP)
BASE DETAIL

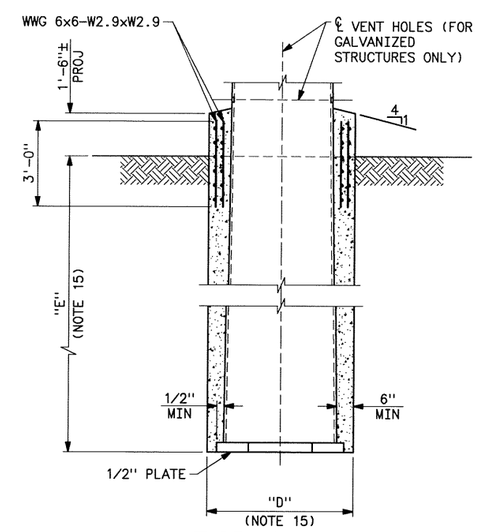

TYPE 281S (DE)
BASE DETAIL

UNITED STATES DEPARTMENT OF ENERGY
WESTERN AREA POWER ADMINISTRATION
CORPORATE SERVICES OFFICE – LAKEWOOD, COLORADO

TRANSMISSION LINE STRUCTURES
281S POLE STRUCTURES
OUTLINE AND DESIGN LOADS

DESIGNED BOBBY HAGLER APPROVED DOUG HANSON
CIVIL ENGINEERING MANAGER

CAE	AUGUST 16, 2010	43-281S	2200

Plotted By:Ahagler on ——
IMAGES:
P:\Ahagler\43_281_s_2200.dwg Last Saved By: Bobby Hagler on 5/27/2011 8:06 AM

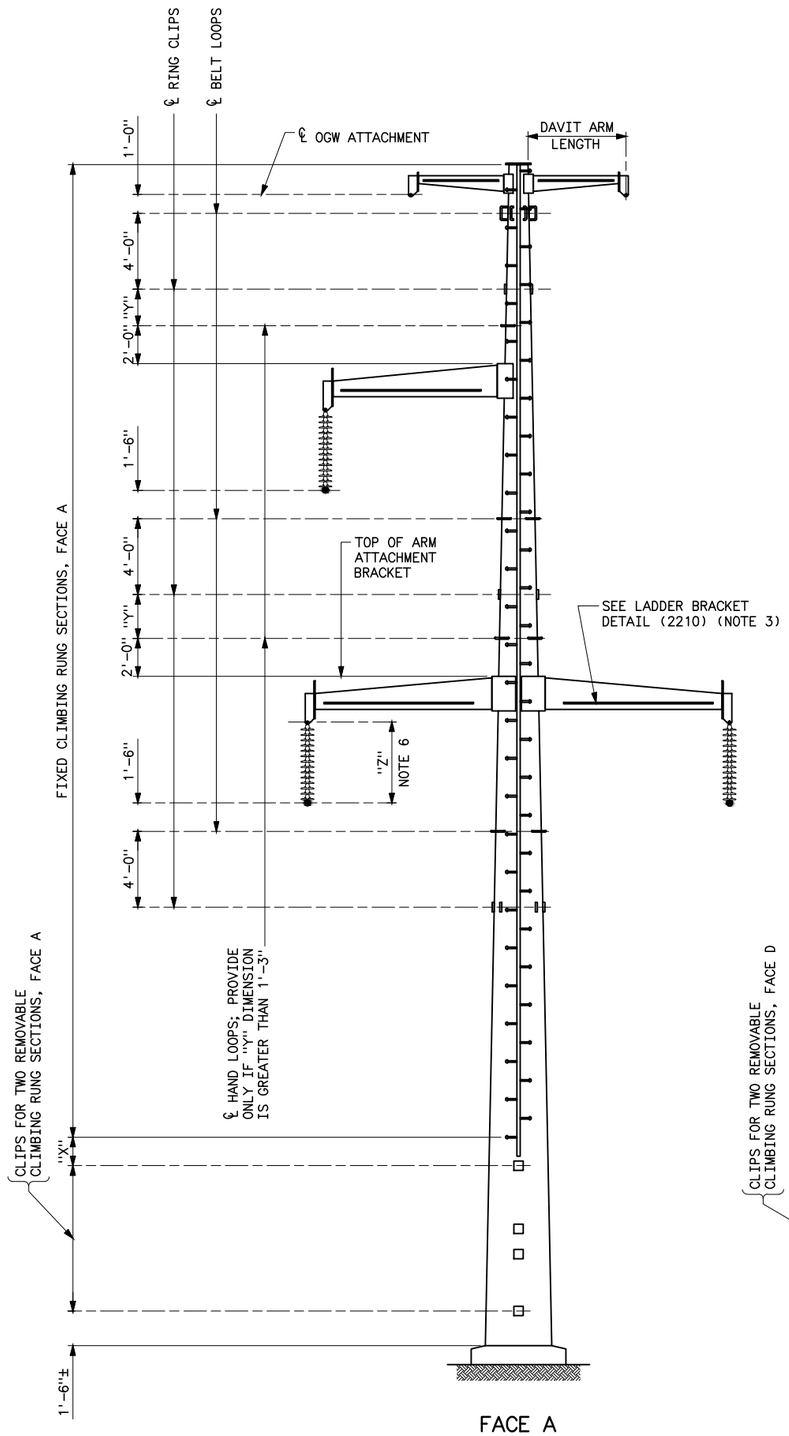

FACE A
TANGENT AND SMALL ANGLE SUSPENSION STRUCTURES

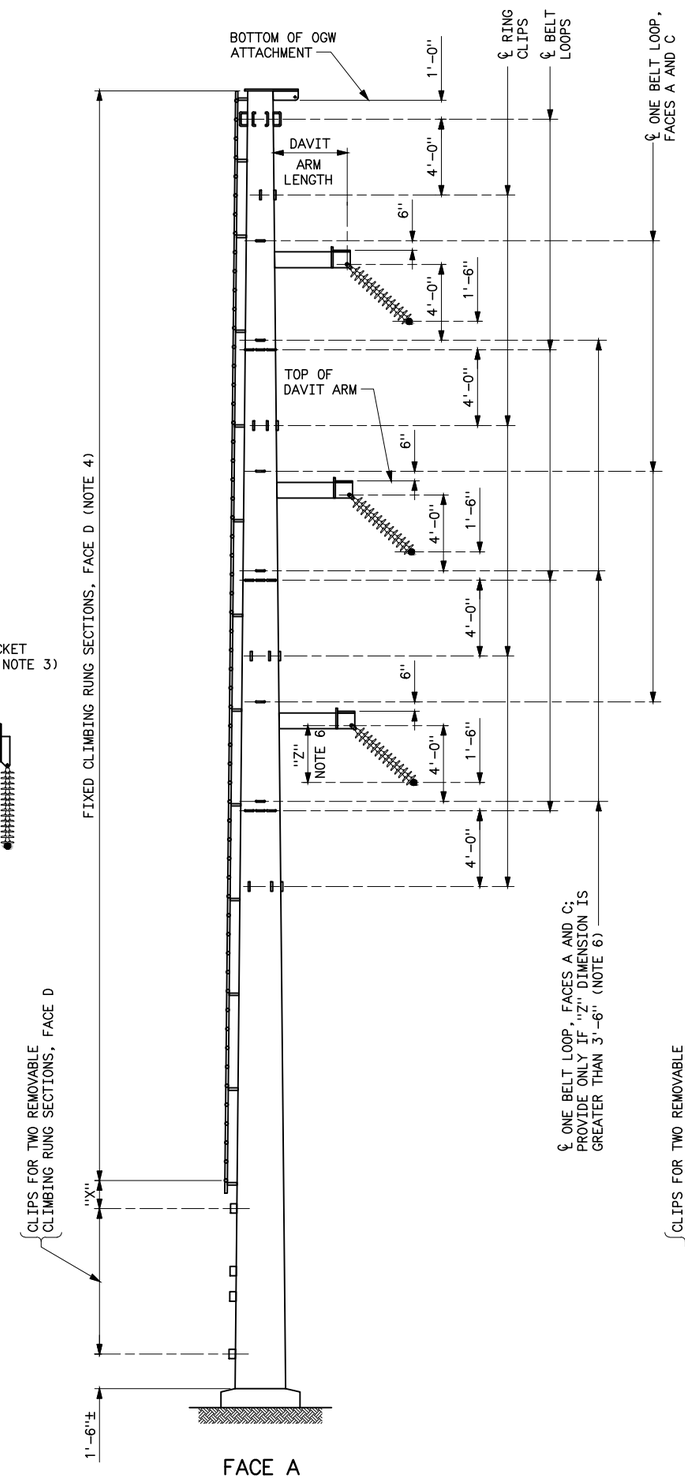

FACE A
MEDIUM AND LARGE ANGLE SUSPENSION STRUCTURES

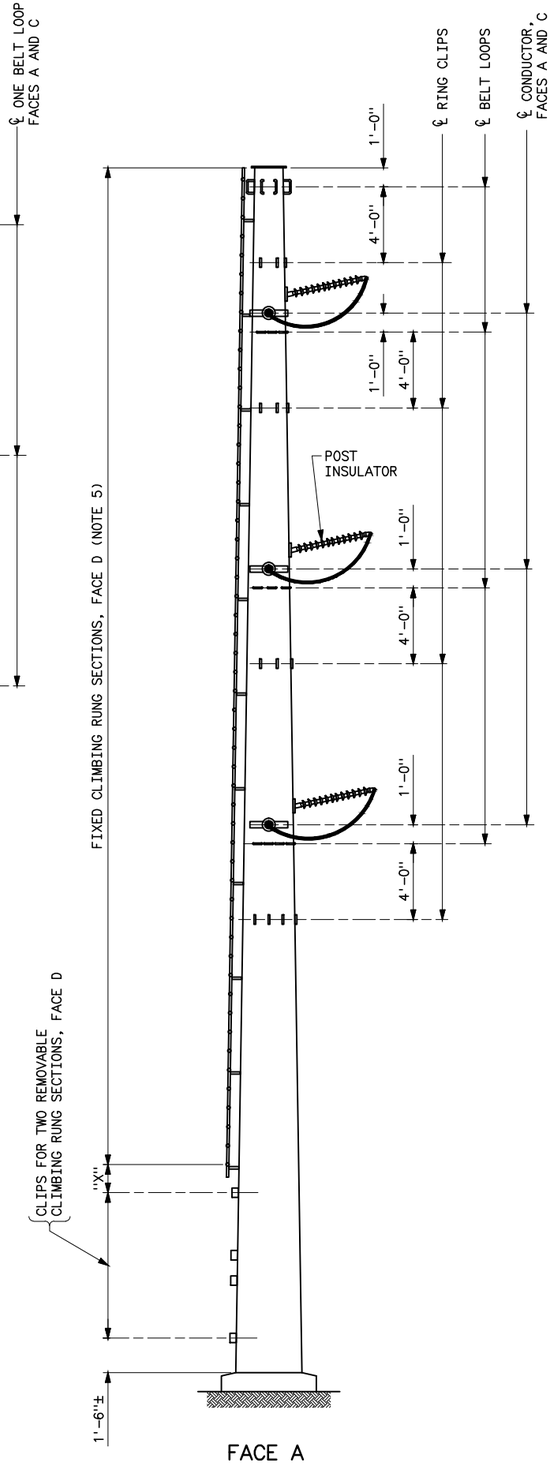

FACE A
TENSION STRUCTURES

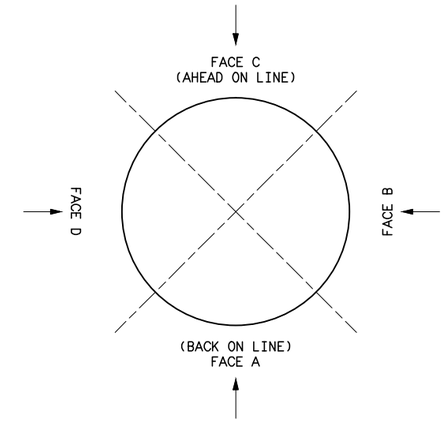

PLAN

(ALL VIEWS TAKEN LOOKING IN DIRECTION OF ARROW)

NOTES

1. "X" DIMENSION SHALL BE MINIMUM REQUIRED TO INSTALL TOP REMOVABLE CLIMBING RUNG SECTION.
2. DISTANCE FROM STEPS TO FACE OF POLE SHAFTS SHALL BE THE SAME FOR FIXED AND REMOVABLE CLIMBING RUNG SECTIONS.
3. PROVIDE LADDER BRACKETS ON DAVIT ARMS LONGER THAN 3'-0", AS SHOWN ON DRAWING 43 2210.
4. FOR MEDIUM AND LARGE ANGLE SUSPENSION STRUCTURES, LOCATE FIXED CLIMBING RUNG SECTIONS AND CLIPS FOR REMOVABLE CLIMBING RUNG SECTIONS ON POLE FACE OPPOSITE SUSPENSION INSULATORS.
5. FOR TENSION STRUCTURES, LOCATE FIXED CLIMBING RUNG SECTIONS AND CLIPS FOR REMOVABLE CLIMBING RUNG SECTIONS ON POLE FACE OPPOSITE POST INSULATORS.
6. FOR VERTICAL COMPONENT OF INSULATOR LENGTH, "Z", SEE SPECIFICATIONS.
7. WELDS TO ATTACH MAINTENANCE PROVISIONS TO STRUCTURES SHALL DEVELOP THE ULTIMATE TENSILE STRENGTH OF THE ATTACHED PART.
8. FOR STRUCTURES WITH CONDUCTOR AND GROUND WIRE ATTACHMENT COMBINATIONS NOT SHOWN, PROVIDE ONLY THOSE MAINTENANCE PROVISIONS WHICH APPLY TO THAT TYPE OF ATTACHMENT.

REFERENCE DRAWING

MAINTENANCE PROVISIONS - DETAILS_____43 2210

H	09-12-06 A7-BGH	REVISED LADDER BRACKETS.
G	3-1-06 A7-RMC	CORRECTED MISSPELLED WORD IN NOTE 5.
F	7-15-03 A7-DH	REVISED TITLE BLOCK ONLY.
E	10-11-02 A7-BGH	REDRAWN AND MINOR REVISIONS.

UNITED STATES DEPARTMENT OF ENERGY
WESTERN AREA POWER ADMINISTRATION
CORPORATE SERVICES OFFICE - LAKEWOOD, COLORADO

TRANSMISSION LINE STRUCTURE STANDARDS
STEEL POLE STRUCTURES
MAINTENANCE PROVISIONS - OUTLINES

DESIGNED BOBBY HAGLER _____ APPROVED DOUG HANSON _____
CIVIL ENGINEERING MANAGER

C/A/E	OCTOBER 11, 2002	43	2206

Plotted By:Ahagler on ----
TWAPS:
P:\dhagler\43_2206h.dwg Last Saved By: Hagler, Bobby on 8/27/2014 1:15 PM

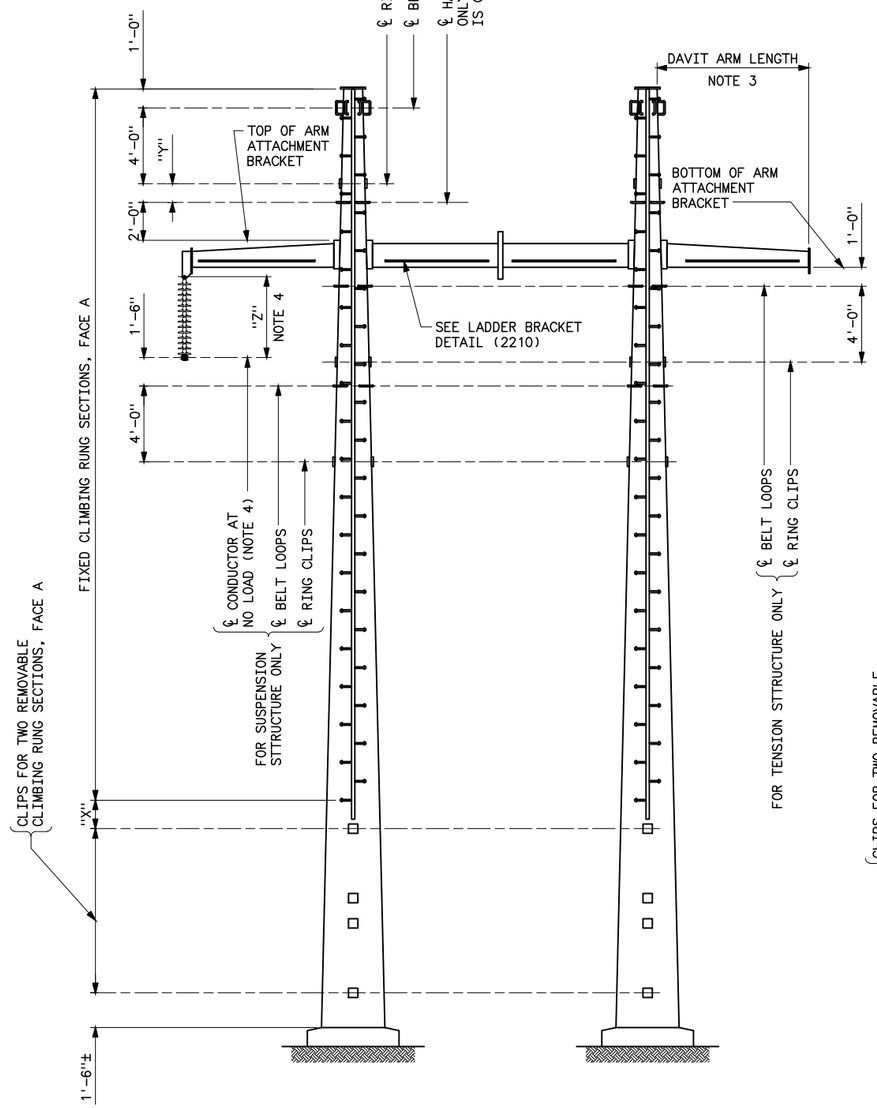

FACE A
H-FRAME STRUCTURES

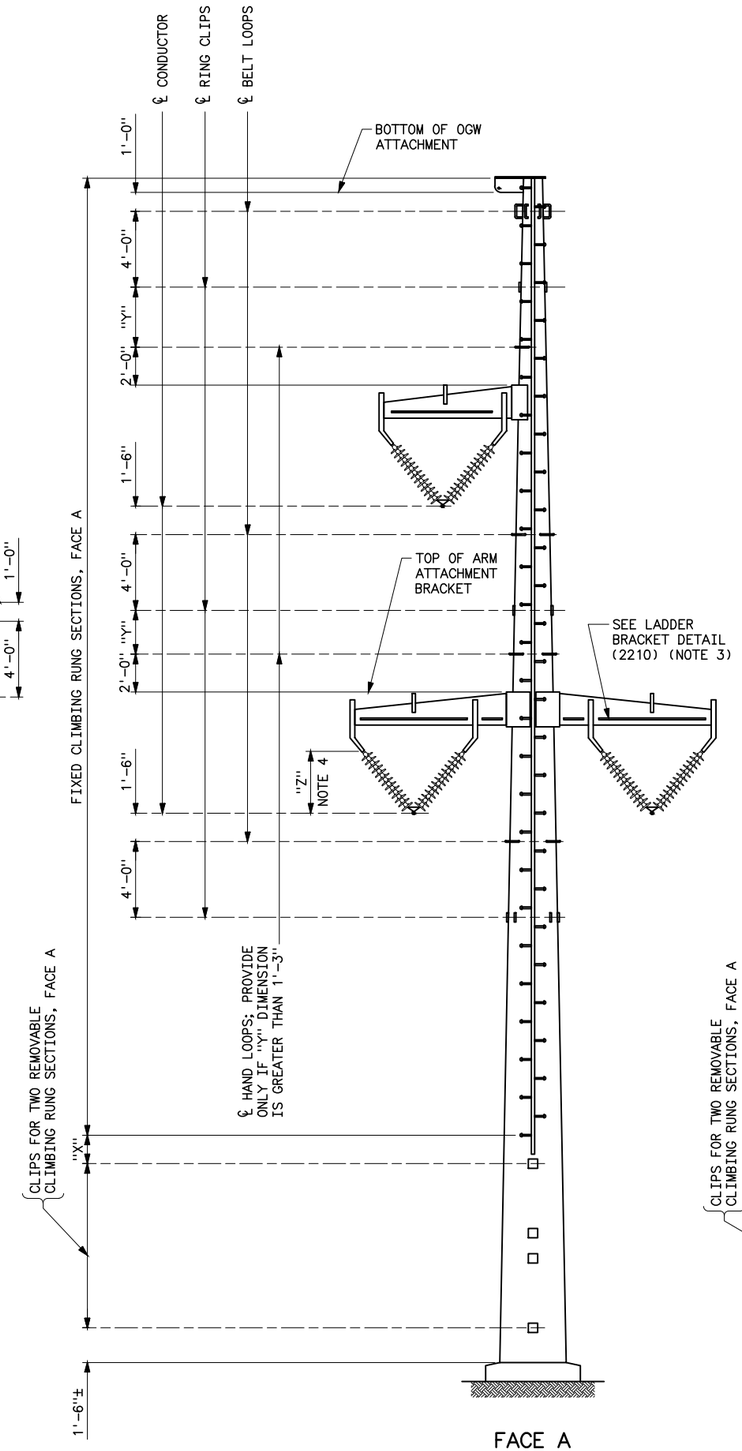

FACE A
STRUCTURES WITH
VEE-STRINGS

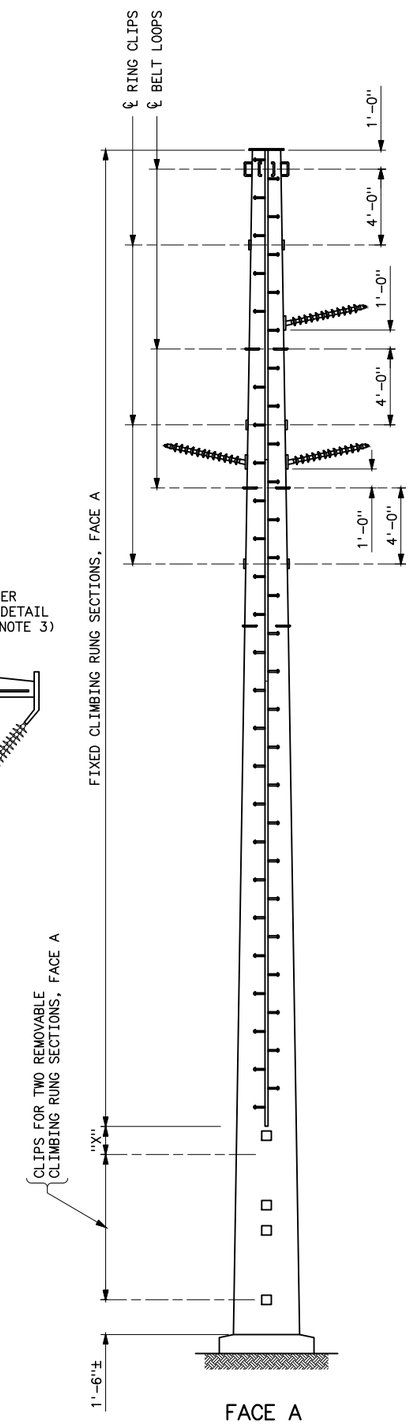

FACE A
STRUCTURES WITH
POST INSULATORS

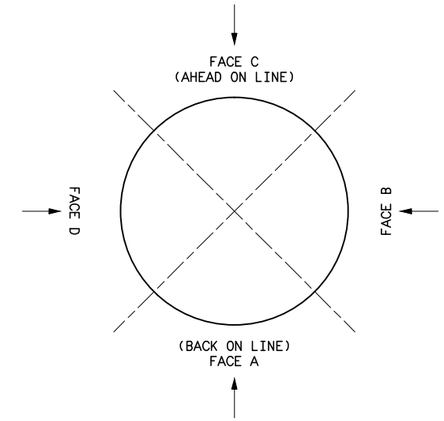

PLAN
(ALL VIEWS TAKEN LOOKING IN DIRECTION OF ARROW)

NOTES

1. "X" DIMENSION SHALL BE MINIMUM REQUIRED TO INSTALL TOP REMOVABLE CLIMBING RUNG SECTION.
2. DISTANCE FROM STEPS TO FACE OF POLE SHAFTS SHALL BE THE SAME FOR FIXED AND REMOVABLE CLIMBING RUNG SECTIONS.
3. PROVIDE LADDER BRACKETS ON DAVIT ARMS LONGER THAN 3'-0", AS SHOWN ON DRAWING 43 2210.
4. FOR VERTICAL COMPONENT OF INSULATOR LENGTH, "Z", SEE SPECIFICATIONS.
5. WELDS TO ATTACH MAINTENANCE PROVISIONS TO STRUCTURES SHALL DEVELOP THE ULTIMATE TENSILE STRENGTH OF THE ATTACHED PART.
6. FOR STRUCTURES WITH CONDUCTOR AND GROUND WIRE ATTACHMENT COMBINATIONS NOT SHOWN, PROVIDE ONLY THOSE MAINTENANCE PROVISIONS WHICH APPLY TO THAT TYPE OF ATTACHMENT.

REFERENCE DRAWING

MAINTENANCE PROVISIONS - DETAILS_____43 2210

G	09-12-06 A7-BGH	REVISED LADDER BRACKETS.
F	7-15-03 A7-DH	REVISED TITLE BLOCK ONLY.
E	10-16-02 A7-BGH	REDRAWN AND MINOR REVISIONS.

UNITED STATES DEPARTMENT OF ENERGY
WESTERN AREA POWER ADMINISTRATION
CORPORATE SERVICES OFFICE - LAKEWOOD, COLORADO

TRANSMISSION LINE STRUCTURE STANDARDS
STEEL POLE STRUCTURES
MAINTENANCE PROVISIONS - OUTLINES

DESIGNED BOBBY HAGLER _____ APPROVED DOUG HANSON _____
CIVIL ENGINEERING MANAGER

CAE	OCTOBER 16, 2002	43	2207

Plotted By:ahagler Jan 09, 2015- 1:55pm
IMAGES:
P:\ahagler\43.2207g.dwg Last Saved By: Hagler, Bobby on 8/27/2014 1:37 PM

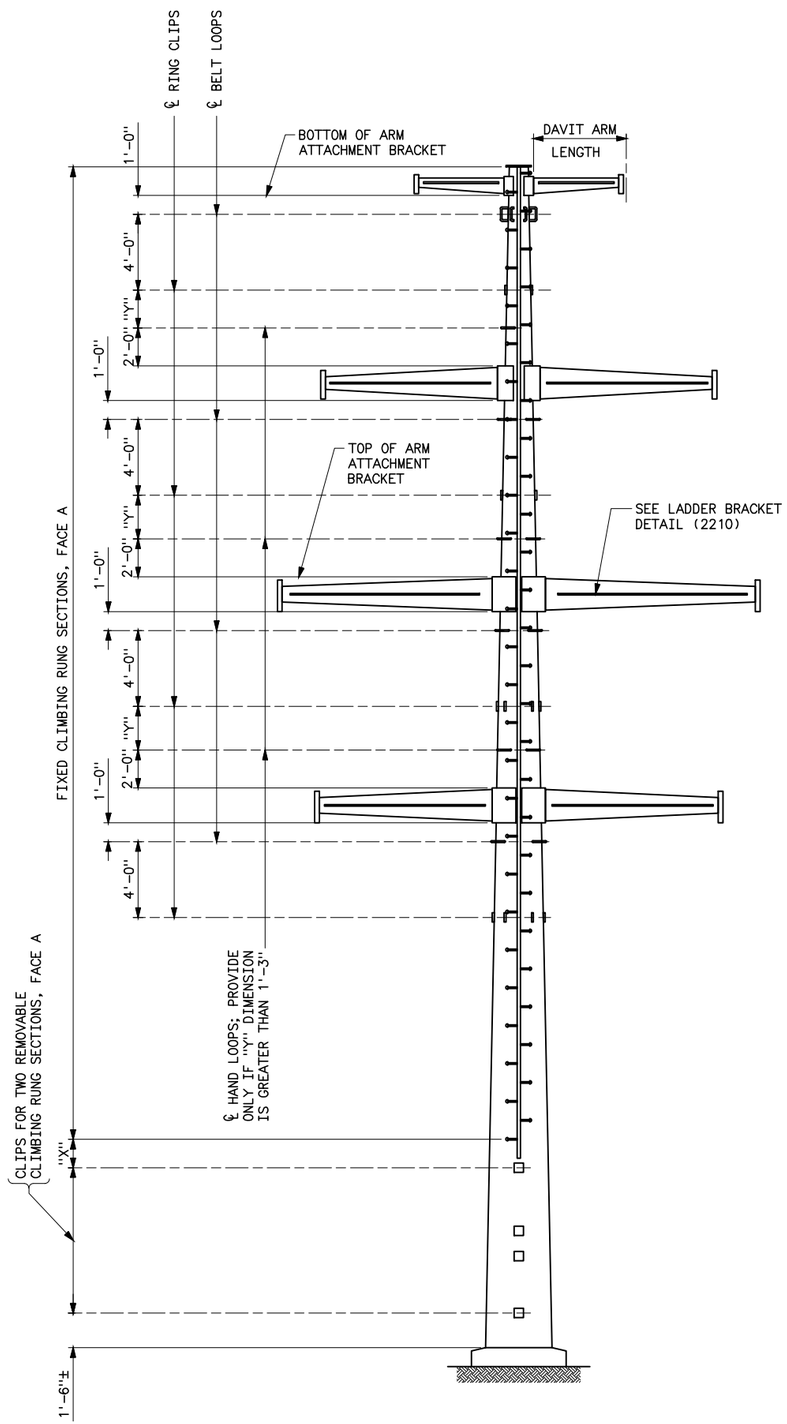

FACE A
TENSION STRUCTURE WITH DAVIT ARMS

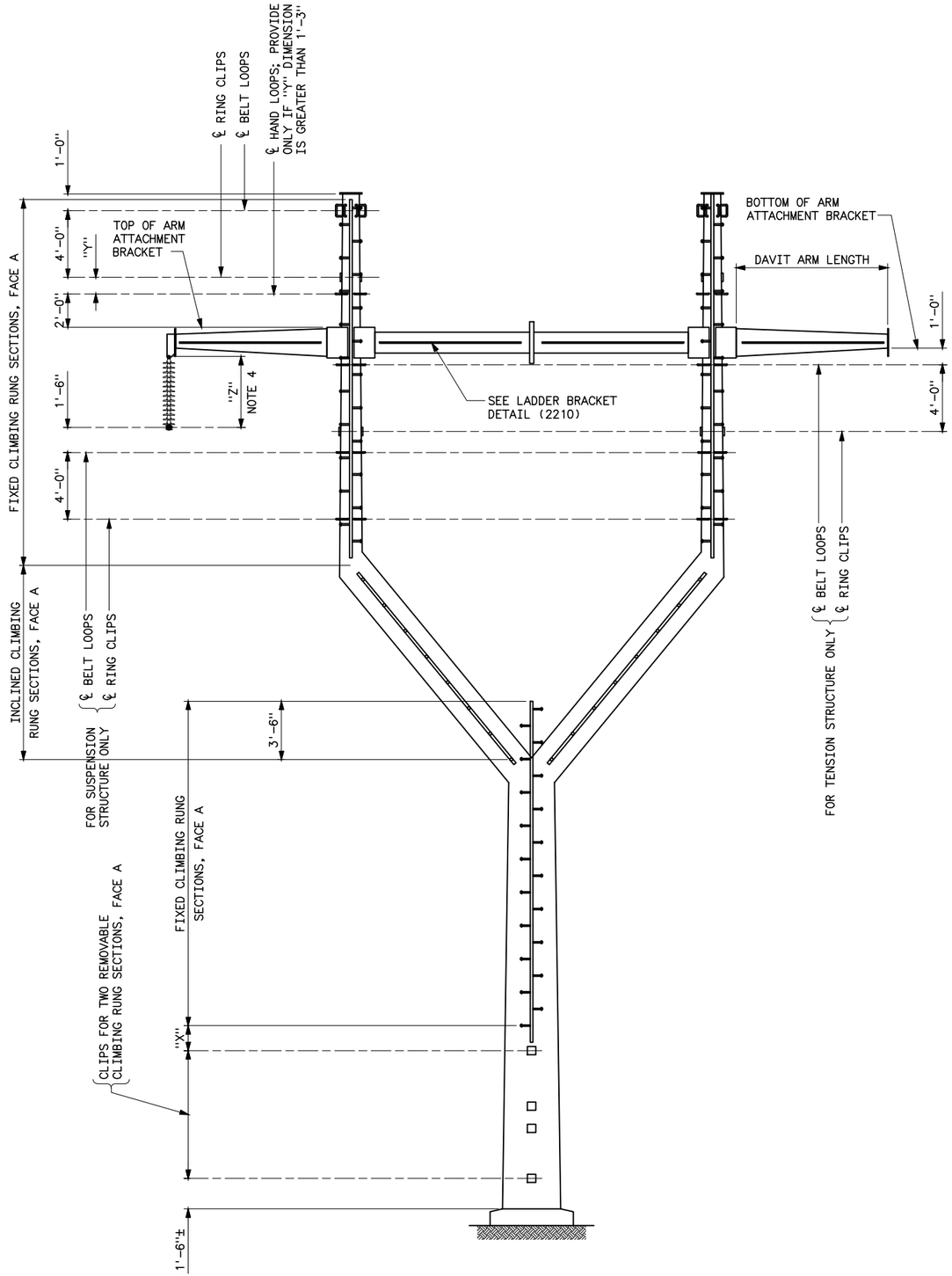

FACE A
Y-TYPE STRUCTURE

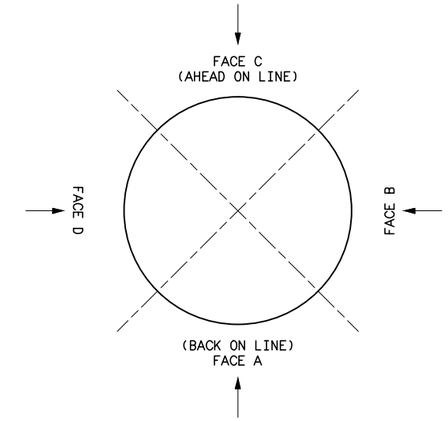

PLAN

(ALL VIEWS TAKEN LOOKING IN DIRECTION OF ARROW)

NOTES

1. "X" DIMENSION SHALL BE MINIMUM REQUIRED TO INSTALL TOP REMOVABLE CLIMBING RUNG SECTION.
2. DISTANCE FROM STEPS TO FACE OF POLE SHAFTS SHALL BE THE SAME FOR FIXED AND REMOVABLE CLIMBING RUNG SECTIONS.
3. PROVIDE LADDER BRACKETS ON DAVIT ARMS LONGER THAN 3'-0", AS SHOWN ON DRAWING 43 2210.
4. FOR VERTICAL COMPONENT OF INSULATOR LENGTH, "Z", SEE SPECIFICATIONS.
5. WELDS TO ATTACH MAINTENANCE PROVISIONS TO STRUCTURES SHALL DEVELOP THE ULTIMATE TENSILE STRENGTH OF THE ATTACHED PART.
6. FOR STRUCTURES WITH CONDUCTOR AND GROUND WIRE ATTACHMENT COMBINATIONS NOT SHOWN, PROVIDE ONLY THOSE MAINTENANCE PROVISIONS WHICH APPLY TO THAT TYPE OF ATTACHMENT.

REFERENCE DRAWING

MAINTENANCE PROVISIONS - DETAILS_____43 2210

H	09-12-06 A7-BGH	REVISED LADDER BRACKETS.
G	7-15-03 A7-DH	REVISED TITLE BLOCK ONLY.
F	10-17-02 A7-BGH	REDRAWN AND MINOR REVISIONS.

UNITED STATES DEPARTMENT OF ENERGY
WESTERN AREA POWER ADMINISTRATION
CORPORATE SERVICES OFFICE - LAKEWOOD, COLORADO

TRANSMISSION LINE
STRUCTURE STANDARDS
STEEL POLE STRUCTURES
MAINTENANCE PROVISIONS - OUTLINES

DESIGNED BOBBY HAGLER _____ APPROVED DOUG HANSON _____
CIVIL ENGINEERING MANAGER

CAE	OCTOBER 17, 2002	43	2208

Plotted By: Lampman on 9/12/2006 1:53 PM
TLWCS
C:\Users\lampman\Desktop\copy_43_2208h.dwg Last Saved By: Lampman, Eva (CONTR) on 5/15/2015 9:46 AM

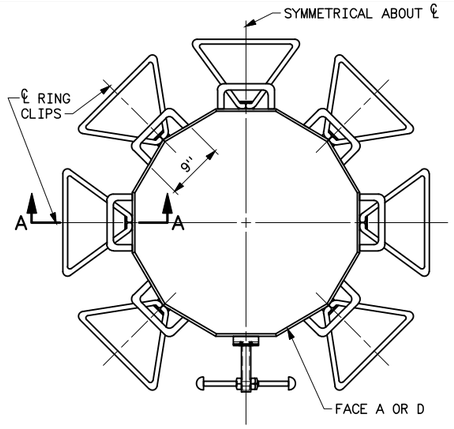

POLE DIAMETER > 36"

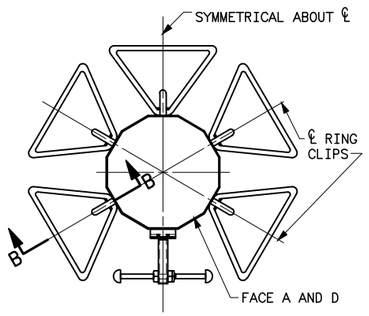

POLE DIAMETER ≤ 36"

TYPICAL BELT LOOP AND WORK RING PLANS

(NOTE 4)

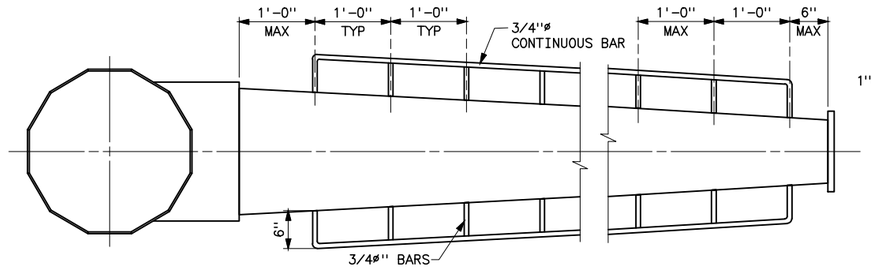

LADDER BRACKET PLAN

FOR DAVIT ARMS LONGER THAN 3'-0"

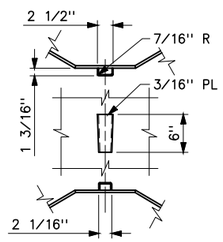

RING CLIP

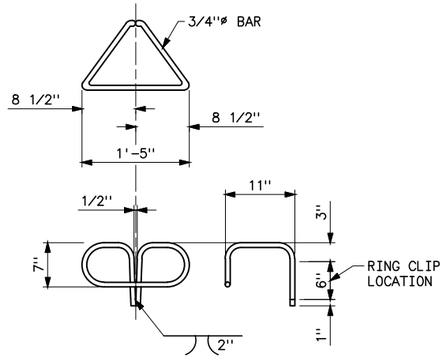

WORK RING

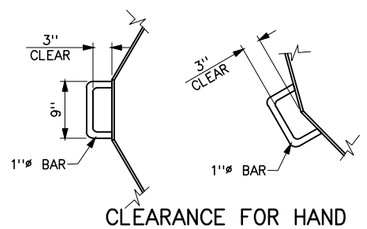

CLEARANCE FOR HAND AND BELT LOOPS

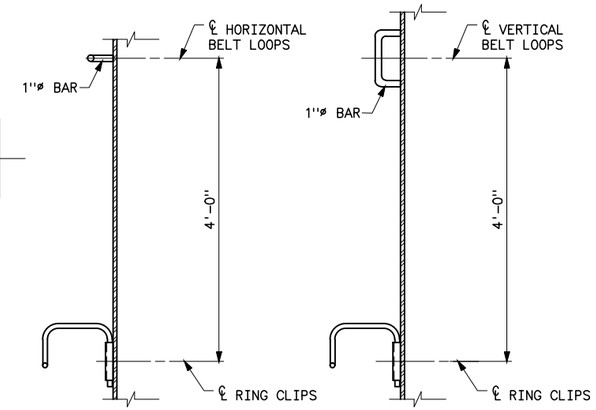

SECTION A–A SECTION B–B

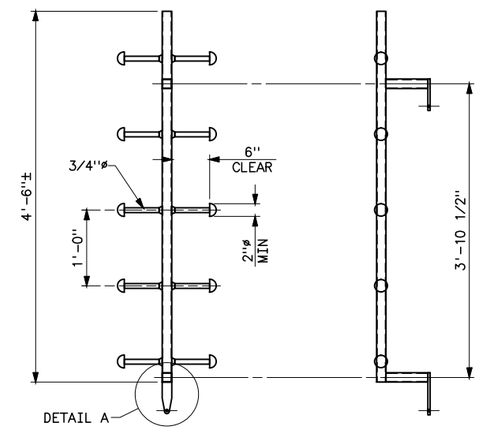

REMOVABLE CLIMBING RUNG SECTION

NOTES

1. MINIMUM INSIDE COLD BENDING RADII (INCHES):
   3/4"ø BAR=2 1/4"
   1"ø BAR=3"
2. WELDS TO ATTACH MAINTENANCE PROVISIONS TO STRUCTURES SHALL DEVELOP THE ULTIMATE TENSILE STRENGTH OF THE ATTACHED PART.
3. DISTANCE FROM CENTERLINE OF STEP BOLTS TO FACE OF POLE SHAFTS FOR FIXED AND REMOVABLE CLIMBING RUNG SECTIONS SHALL BE 7 INCHES.
4. PROVIDE ONE BELT LOOP ABOVE EACH RING CLIP.
5. FIXED CLIMBING RUNG SECTIONS SHALL BE SPLICED TOGETHER TO FORM A CONTINUOUS CENTER SUPPORT FOR THE FULL HEIGHT OF THE STRUCTURE. SPLICES SHALL BE DESIGNED TO ENSURE FULL STRUCTURAL CONTINUITY OF THE CENTER SUPPORT. SMALL GAPS IN THE CENTER SUPPORT ACROSS SLIP JOINTS ARE ACCEPTABLE.
6. TOP OR BOTTOM CANTILEVERED EXTENSIONS OF FIXED CLIMBING RUNG SECTIONS SHALL NOT EXTEND MORE THAN 27 INCHES BEYOND THE NEAREST CLIP.
7. FOR WEATHERING-STEEL STRUCTURES, AFTER INSTALLING FIXED AND INCLINED CLIMBING RUNG SECTIONS WITH BOLTS, NUTS, AND LOCKNUTS, SPOT WELD THE RUNG SECTION MOUNTING PLATES TO THE ATTACHMENTS ON THE POLE SHAFTS. WELDING SHALL BE SUFFICIENT TO PROVIDE ELECTRICAL CONTINUITY BETWEEN CLIMBING RUNG SECTIONS AND THE POLE SHAFT. PREFERRED WELDING ROD SERIES IS E8018-C3. OTHER ACCEPTABLE SERIES ARE E8018-C1 AND E8018-C2.
8. ALTERNATIVE METHODS FOR ATTACHING FIXED AND INCLINED CLIMBING RUNG SECTIONS MAY BE SUBMITTED FOR APPROVAL.

REFERENCE DRAWINGS

MAINTENANCE PROVISIONS–
WORK RING _____ 43 2203
OUTLINES _____ 43 2206 THRU 2209, & 2214

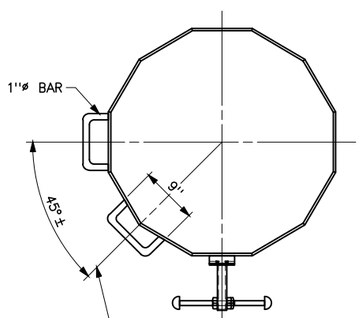

POLE DIAMETER > 36"

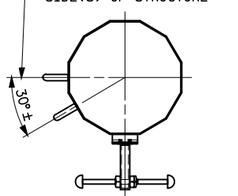

POLE DIAMETER ≤ 36"

HAND LOOP PLANS

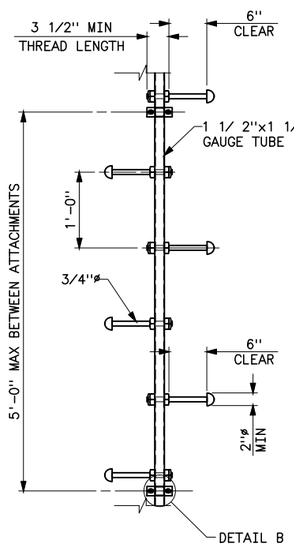

FIXED CLIMBING RUNG SECTION

(NOTES 5 AND 6)

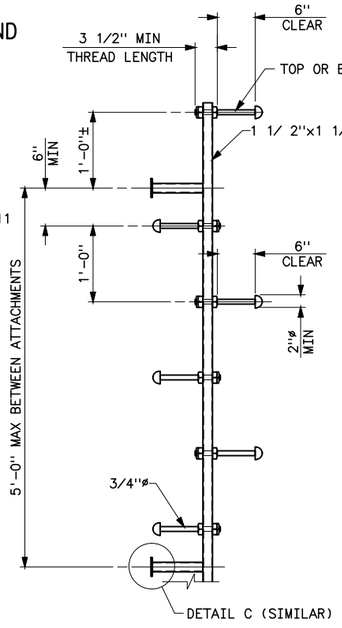

INCLINED CLIMBING RUNG SECTION

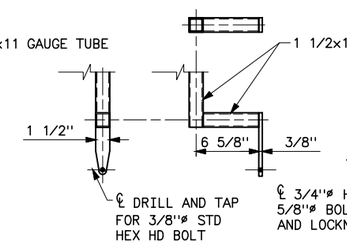

DETAIL A

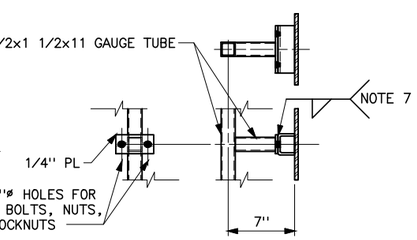

DETAIL B
DETAIL C (SIMILAR)

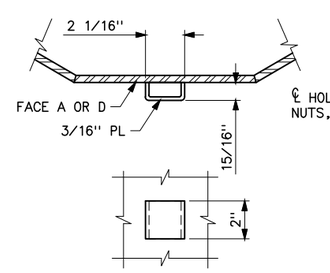

CLIP FOR REMOVABLE CLIMBING RUNG SECTIONS

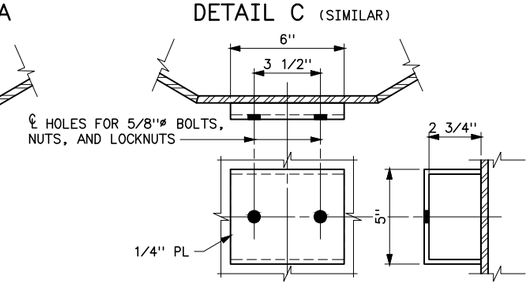

ATTACHMENT FOR FIXED AND INCLINED CLIMBING RUNG SECTIONS

(NOTE 8)

I	9-11-15 A7-BGH	REVISED STEP BOLTS AND ADDED DIMENSIONS FOR ATTACHMENTS FOR FIXED AND INCLINED CLIMBING RUNG SECTIONS. REVISED NOTES 6 AND 7.
H	12-22-05 A7-BH	REVISED LADDER BRACKET PLAN.
G	7-15-03 A7-DH	REVISED TITLE BLOCK ONLY.
F	10-28-02 A7-BGH	REDRAWN. ADDED NOTES 5, 6, AND 8. MINOR REVISIONS.

UNITED STATES DEPARTMENT OF ENERGY
WESTERN AREA POWER ADMINISTRATION
HEADQUARTERS – LAKEWOOD, CO

TRANSMISSION LINE STRUCTURE STANDARDS
STEEL POLE STRUCTURES
MAINTENANCE PROVISIONS – DETAILS

DESIGNED BOBBY HAGLER APPROVED DOUG HANSON CIVIL ENGINEERING MANAGER

CAE	OCTOBER 28, 2002	43	2210

Plotted By:ahagler Nov 13, 2015- 2:25pm IMAGES:
P:\ahagler\43_2210I.dwg Last Saved By: Hagler, Bobby on 11/13/2015 2:24 PM
XREF(S):

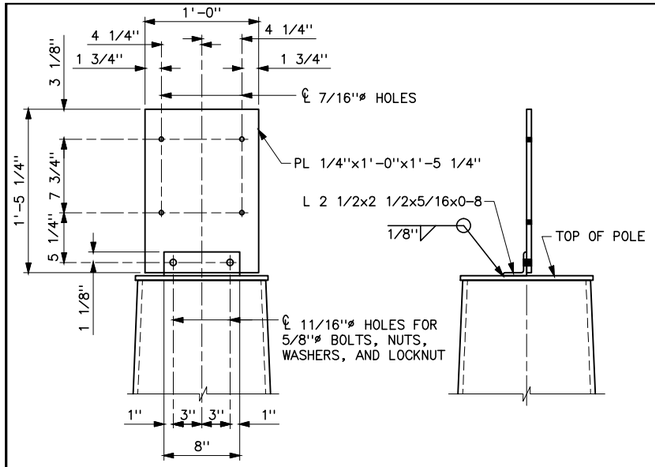

AERIAL PATROL MILE MARKER SIGN MOUNTING PLATE

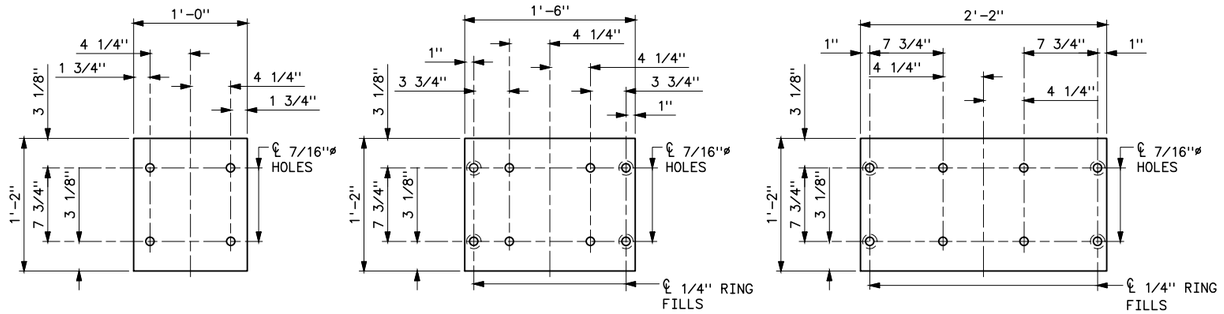

1-DIGIT MILE NUMBER

2-DIGIT MILE NUMBER

3-DIGIT MILE NUMBER

AERIAL PATROL MILE MARKER SIGNS

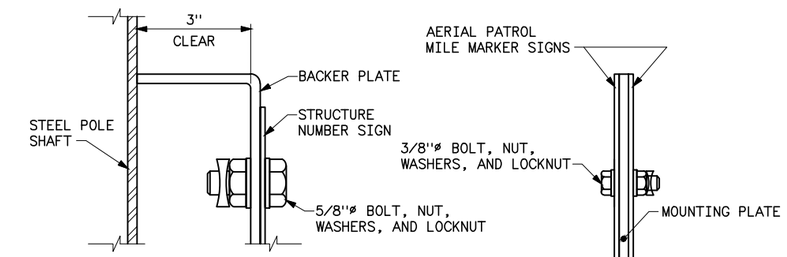

SECTION A-A
STRUCTURE NUMBER SIGN

AERIAL PATROL MILE MARKER SIGN

ATTACHMENT DETAILS

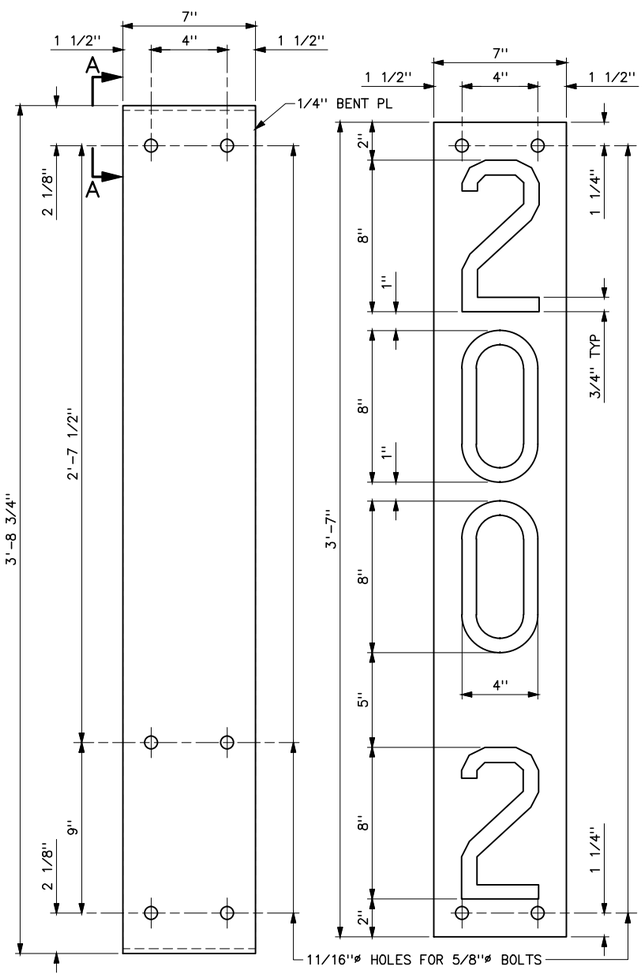

3-DIGIT MILE NUMBER

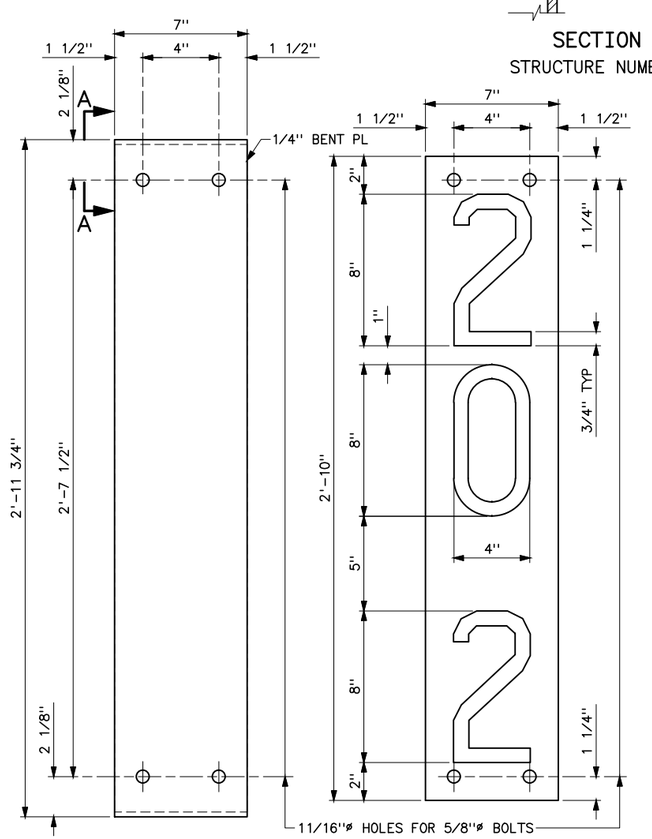

1-AND 2-DIGIT MILE NUMBERS

STRUCTURE NUMBER SIGNS, LETTER DIMENSIONS, AND BACKER PLATES
(NOTE 11)

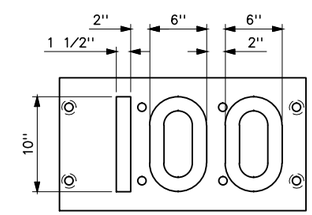

LETTERING TO BE CENTERED HORIZONTALLY AND VERTICALLY

AERIAL PATROL MILE MARKER SIGN LETTER DIMENSIONS

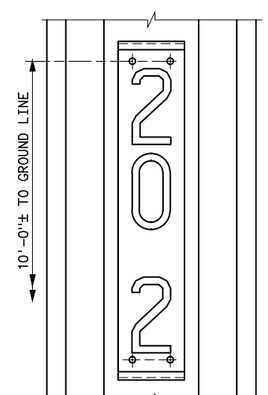

STRUCTURE NUMBER SIGN LOCATION
(NOT TO SCALE)

NOTES

1. SIGN SHALL BE NO 18 U.S. GAGE SHEET STEEL.
2. FINISH FOR SIGN SHALL BE PORCELAIN ENAMEL. BACKGROUND COLOR SHALL BE YELLOW AND FIGURES SHALL BE BLACK.
3. PORCELAIN ENAMEL SHALL BE IN ACCORDANCE WITH THE RECOMMENDED STANDARDS FOR MANUFACTURE OF PORCELAIN ENAMEL SIGNS (PEI: S-103) OF THE SIGN DIVISION OF THE PORCELAIN ENAMEL INSTITUTE, INC.
4. FIGURES SHALL BE "BLOCK" TYPE.
5. HOLES IN SIGNS SHALL BE FURNISHED AND FITTED WITH BRASS EYELETS.
6. AERIAL PATROL MILE MARKER SIGN MOUNTING PLATES AND ANGLES WELDED TO GALVANIZED STEEL POLES SHALL CONFORM TO ASTM A 36 AND SHALL BE GALVANIZED.
7. ANGLE WELDED TO WEATHERING STEEL POLES SHALL CONFORM TO ASTM A 242 OR ASTM A 588.
8. STRUCTURE NUMBER SIGN BACKER PLATES SHALL BE THE SAME TYPE OF MATERIAL AND FINISH AS THE STEEL POLE.
9. INSTALL TWO AERIAL PATROL MILE MARKER SIGNS ON THE FIRST STRUCTURE OF EACH MILE SECTION. MOUNTING PLATE SHALL BE PERPENDICULAR TO THE DIRECTION OF THE TRANSMISSION LINE. MOUNT SIGNS BACK-TO-BACK ON MOUNTING PLATE. LOCATION AND MOUNTING DETAILS MAY BE VARIED SLIGHTLY TO SUIT CONDITIONS.
10. INSTALL STRUCTURE NUMBER SIGNS ON BOTH THE AHEAD AND BACK SPAN SIDE OF EACH STRUCTURE.
11. FOR STRUCTURE NUMBER SIGNS REQUIRING 5 DIGITS; E.G., 135/2A, DIMENSIONS FOR FIGURES SHALL BE 4" WIDE BY 6 1/4" HIGH IN LIEU OF 4" WIDE BY 8" HIGH. 5-DIGIT SIGN DIMENSIONS SHALL BE IN ACCORDANCE WITH THE 3-DIGIT MILE NUMBER DETAIL.

E	08-08-07 A7-BGH	ADDED 2-DIGIT MILE NUMBER HOLES TO 3-DIGIT MILE NUMBER BACKER PLATE.
D	12-13-05 A7-BGH	REVISED STRUCTURE NUMBER SIGN BACKER PLATES AND NOTES.
C	7-15-03 A7-RC	REVISED TITLE BLOCK ONLY.
B	11-30-01 A7-BH	CLARIFIED NOTE 8, ADDED NOTE 10.
A	12-15-95 A2-RMC	REVISED MOUNTING PLATE DETAILS AND NOTES. ADD STRUCTURE NUMBER SIGN ATTACHMENT DETAIL.

UNITED STATES DEPARTMENT OF ENERGY
WESTERN AREA POWER ADMINISTRATION
CORPORATE SERVICES OFFICE - LAKEWOOD, COLORADO

TRANSMISSION LINE STANDARDS
STEEL POLE STRUCTURES
AERIAL PATROL MILE MARKER AND STRUCTURE NUMBER SIGNS

DESIGNED BOBBY HAGLER APPROVED ROSS CLARK
CHIEF, TRANSMISSION LINE BRANCH

SIZE	DATE	DRAWING	NO.
A	AUGUST 30, 1995	41	9027

Plotted By:ohagler Jan 09, 2015- 9:35am
IMAGES:
P:\ohagler\41.9027e.dwg Last Saved By: Hagler, Bobby on 1/9/2015 9:34 AM

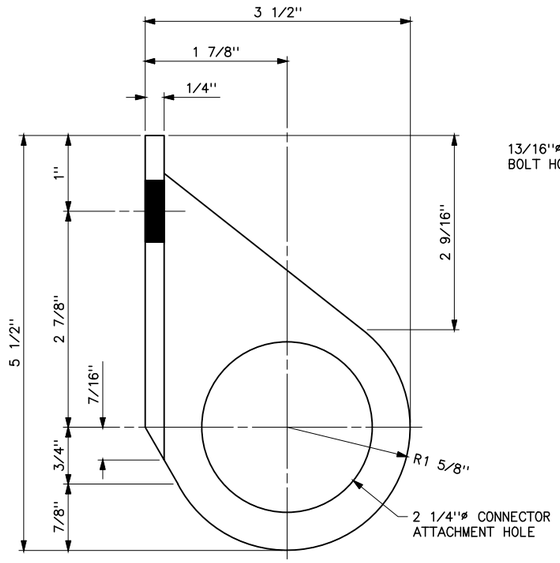

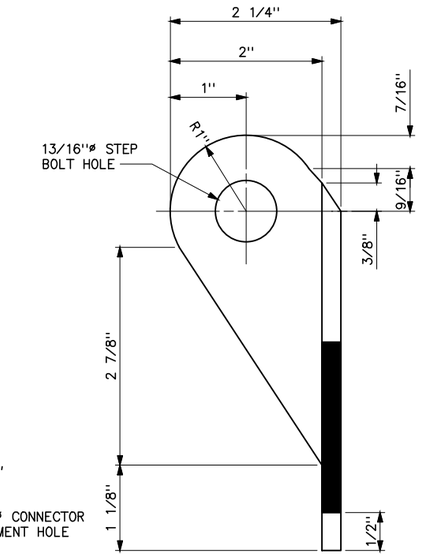

RIGHT ANCHORAGE PLATE
FOR 3/4"ø STEP BOLTS
(STEEL POLE STRUCTURES)
MARK 1FP-5R
(NOTE 5)

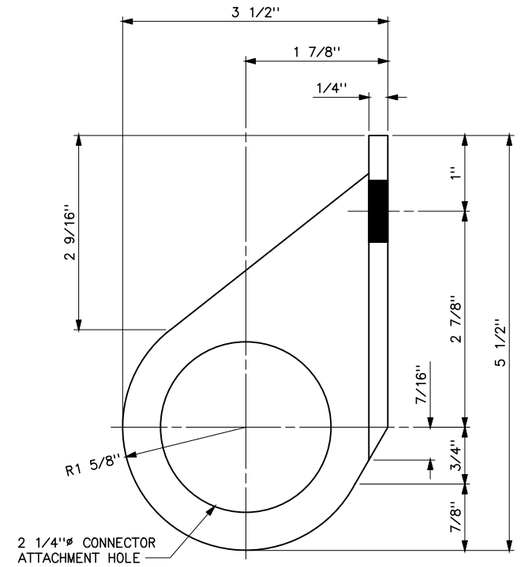

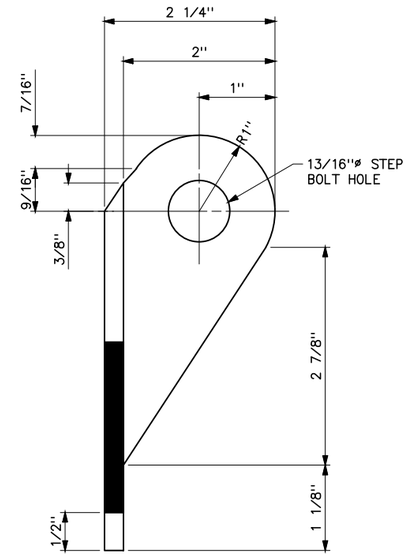

LEFT ANCHORAGE PLATE
FOR 3/4"ø STEP BOLTS
(STEEL POLE STRUCTURES)
MARK 1FP-5L
(NOTE 5)

QTY.	MATERIAL	LENGTH		MARK	WEIGHT EACH (LB)
		FEET	INCHES		
1	PL 1/4x6 1/2	0	3 7/8	1FP-5R	1.3
1	PL 1/4x6 1/2	0	3 7/8	1FP-5L	1.3
1	PL 1/4x6 3/8	0	3 7/8	2FP-5R	1.3
1	PL 1/4x6 3/8	0	3 7/8	2FP-5L	1.3

NOTES

1. STEEL PLATE:
   - GALVANIZED STRUCTURES: ASTM A572. GALVANIZE ALL MATERIAL AFTER FABRICATION.
   - WEATHERING STEEL STRUCTURES: ASTM A242, ASTM A588, OR ASTM A871.
2. INSIDE BEND RADIUS FOR 1/4" PLATE: 3/8"
3. ANCHORAGE PLATE MARK NUMBER - KEY TO DESIGNATIONS:
   - FP DENOTES "FLANGE PLATES";
   - 5 DENOTES STRENGTH OF PLATE IN KIPS;
   - R AND L DENOTES RIGHT AND LEFT STEP BOLT ATTACHMENT.
4. ALLOWABLE SHEAR STRENGTH FOR ASTM A325 BOLTS, THREADS EXCLUDED FROM SHEAR PLANS:
   - 5/8"ø=9.2KIPS;
   - 3/4"ø=13.3 KIPS.

   NOTE: ASTM A394 BOLT SHEAR STRENGTHS ARE 60% OF ABOVE VALUES.
5. INSTALLATION INSTRUCTIONS:
   - STEEL POLE STRUCTURES: INSTALL ANCHORAGE PLATES FLUSH WITH CENTER SUPPORT OF PERMANENT LADDERS WITH NO WASHERS BETWEEN NUT AND ANCHORAGE PLATE NOR BETWEEN ANCHORAGE PLATE AND CENTER LADDER SUPPORT.
   - LATTICE TOWERS: INSTALL ANCHORAGE PLATES FLUSH WITH LEG ANGLES WITH NO WASHERS BETWEEN NUT AND ANCHORAGE PLATE NOR BETWEEN ANCHORAGE PLATE AND LEG ANGLES.
   - INSTALL PLATES WITH STEP BOLT HOLE TOWARDS TOP OF STRUCTURE. NEVER MOUNT PLATES WITH THE PLANE OF CONNECTOR ATTACHMENT HOLE PARALLEL TO GROUND SURFACE.
   - INSTALL NUT AND LOCKNUT OR LOCK WASHER ON "BACK SIDE" OF CONNECTION.
   - ENSURE THAT PLATES DO NOT MOVE AFTER INSTALLATION.

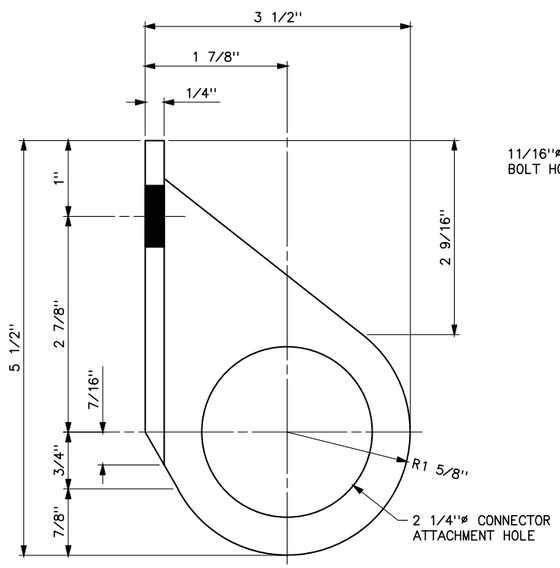

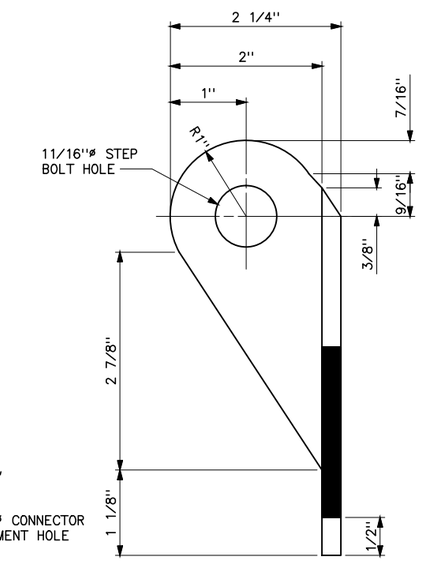

RIGHT ANCHORAGE PLATE
FOR 5/8"ø STEP BOLTS
(LATTICE TOWERS)
MARK 2FP-5R
(NOTE 5)

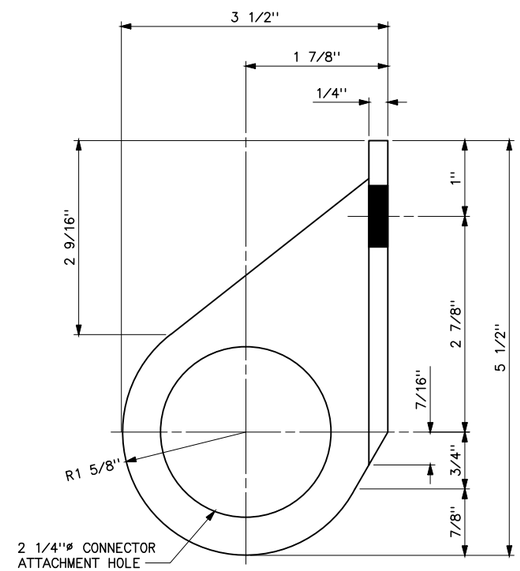

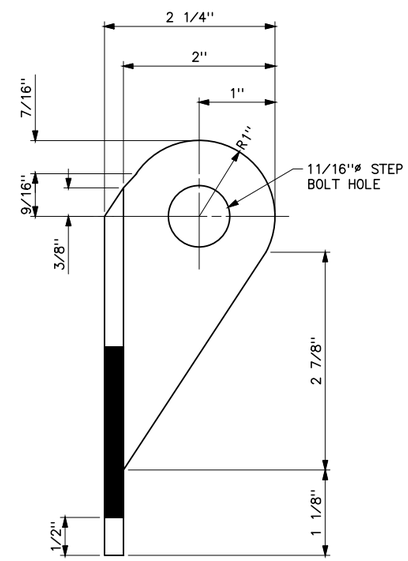

LEFT ANCHORAGE PLATE
FOR 5/8"ø STEP BOLTS
(LATTICE TOWERS)
MARK 2FP-5L
(NOTE 5)

A	5-27-15 A7-BGH	REDRAWN AND REVISED MARK NOS. AND TITLE BLOCK. ADDED LEFT ANCHORAGE PLATES.

UNITED STATES DEPARTMENT OF ENERGY
WESTERN AREA POWER ADMINISTRATION
CORPORATE SERVICES OFFICE - LAKEWOOD, COLORADO

TRANSMISSION LINE STANDARDS
STEEL POLE STRUCTURES AND LATTICE TOWERS
FALL PROTECTION ANCHORAGE PLATES

DESIGNED CHARLES GARCIA APPROVED DOUG HANSON
CIVIL ENGINEERING MANAGER

CAE	APRIL 7, 2015	41	2701

Plotted By:ahagler Nov 18, 2015- 1:19pm IMAGES:
P:\ahagler\41_2701a (Step Bolt Flange).dwg Last Saved By: Hagler, Bobby on 11/18/2015 1:19 PM
XREF(S):

LEGEND:

APPROXIMATE BORING LOCATION (STRUCTURE #)

NOTE: SITE IMAGE MAP PROVIDED USGS NATIONAL MAP VIEWER, 2015

Project Mngr: JRH	Project No. 65155124	Terracon Consulting Engineers and Scientists	SITE PLAN AND BORING LOCATIONS
Drawn By: KLJ	Scale: AS SHOWN	4685 South Ash Avenue, Suite H-4 Tempe, AZ 85282	Gila-Knob T/L Rebuild, Phase 1
Checked By: JRH	File No. 65155124.DWG	PH. (480) 897-8200 FAX. (480) 897-1133	EAST COUNTY 6th STREET and SOUTH AVENUE 8 ½ E.
Approved By: SDN	Date: 12/16/2015		YUMA COUNTY, ARIZONA

EXHIBIT

A-1

GLA-KNB 8000

BORING LOG NO. B-1

PROJECT: Gila-Knob T/L Rebuild

CLIENT: Civil Design & Engineering, Inc.
Phoenix, Arizona

SITE: North Gila Substation
Near Yuma, Arizona

LOCATION See Exhibit A-1

Latitude: 32.743526° Longitude: -114.488535°

GRAPHIC LOG	DEPTH	DEPTH (Ft.)	WATER LEVEL OBSERVATIONS	SAMPLE TYPE	FIELD TEST RESULTS	UNCONFINED COMPRESSIVE STRENGTH (psf)	WATER CONTENT (%)	DRY UNIT WEIGHT (pcf)	ATTERBERG LIMITS LL-PL-PI	PERCENT FINES
	POORLY GRADED SAND WITH GRAVEL (SP), trace silt, brown, medium dense									
					17-20					
		5			6-17		1	110		
	7.0 **POORLY GRADED SAND WITH SILT (SP-SM)**, trace gravel, brown, medium dense									
		10			12-13-12 N=25		1			
		15			12-13-15 N=28		2		NP	7
		20			12-16		4	92		

Stratification lines are approximate. In-situ, the transition may be gradual.

Hammer Type: Automatic

Advancement Method:
Hollow Stem Auger

Abandonment Method:
Borings backfilled with soil cuttings upon completion.

See Exhibit A-2 for description of field procedures
See Appendix B for description of laboratory procedures and additional data (if any).
See Appendix A for explanation of symbols and abbreviations.

Notes:

WATER LEVEL OBSERVATIONS

Groundwater not encountered

Terracon
4685 S. Ash Ave., Suite H-4
Tempe, Arizona

Boring Started: 12/4/2015 | Boring Completed: 12/4/2015
Drill Rig: CME-55 | Driller: D&S Drilling
Project No.: 65155124 | Exhibit: A-5

THIS BORING LOG IS NOT VALID IF SEPARATED FROM ORIGINAL REPORT. GEO SMART LOG-NO WELL 65155124.GPJ TERRACON2015.GDT 12/16/15

BORING LOG NO. B-1

PROJECT: Gila-Knob T/L Rebuild

CLIENT: Civil Design & Engineering, Inc.
Phoenix, Arizona

SITE: North Gila Substation
Near Yuma, Arizona

LOCATION See Exhibit A-1

Latitude: 32.743526° Longitude: -114.488535°

GRAPHIC LOG	DEPTH	DESCRIPTION	DEPTH (Ft.)	WATER LEVEL OBSERVATIONS	SAMPLE TYPE	FIELD TEST RESULTS	UNCONFINED COMPRESSIVE STRENGTH (psf)	WATER CONTENT (%)	DRY UNIT WEIGHT (pcf)	ATTERBERG LIMITS LL-PL-PI	PERCENT FINES
		POORLY GRADED SAND WITH SILT (SP-SM), trace gravel, brown, medium dense *(continued)*									
			25			5-5-6 N=11		3			
			30			6-9-10 N=19		2			
			35			10-12		2	103		
		dense	40			9-13-29 N=42		2			
	40.5	***Boring Terminated at 40.5 Feet***									

Stratification lines are approximate. In-situ, the transition may be gradual.

Hammer Type: Automatic

Advancement Method:
Hollow Stem Auger

Abandonment Method:
Borings backfilled with soil cuttings upon completion.

See Exhibit A-2 for description of field procedures
See Appendix B for description of laboratory procedures and additional data (if any).
See Appendix A for explanation of symbols and abbreviations.

Notes:

WATER LEVEL OBSERVATIONS

Groundwater not encountered

Terracon
4685 S. Ash Ave., Suite H-4
Tempe, Arizona

Boring Started: 12/4/2015	Boring Completed: 12/4/2015
Drill Rig: CME-55	Driller: D&S Drilling
Project No.: 65155124	Exhibit: A-5

THIS BORING LOG IS NOT VALID IF SEPARATED FROM ORIGINAL REPORT. GEO SMART LOG-NO WELL 65155124.GPJ TERRACON2015.GDT 12/16/15

BORING LOG NO. B-2

PROJECT: Gila-Knob T/L Rebuild

CLIENT: Civil Design & Engineering, Inc.
Phoenix, Arizona

SITE: North Gila Substation
Near Yuma, Arizona

LOCATION See Exhibit A-1

Latitude: 32.746788° Longitude: -114.488083°

GRAPHIC LOG	DEPTH	DEPTH (Ft.)	WATER LEVEL OBSERVATIONS	SAMPLE TYPE	FIELD TEST RESULTS	UNCONFINED COMPRESSIVE STRENGTH (psf)	WATER CONTENT (%)	DRY UNIT WEIGHT (pcf)	ATTERBERG LIMITS LL-PL-PI	PERCENT FINES
	SANDY SILTY CLAY (CL-ML), light brown, very stiff, weak cementation									
					6-14		3	98	~~24-17-7~~	~~58~~
	4.0									
	SILTY SAND WITH GRAVEL (SM), light brown, very dense, weak to moderate cementation									
		5			21-50/5"		2			
		10			17-25-30 N=55		1			
		15			12-23-28 N=51		3			
					20-30/3"		4	106		
	20.0	20								
	POORLY GRADED SAND WITH GRAVEL (SP), trace silt, brown to light brown, very dense, no to weak cementation									

Stratification lines are approximate. In-situ, the transition may be gradual.

Hammer Type: Automatic

Advancement Method:
Hollow Stem Auger

Abandonment Method:
Backfilled with cement-bentonite grout upon completion.

See Exhibit A-2 for description of field procedures
See Appendix B for description of laboratory procedures and additional data (if any).
See Appendix A for explanation of symbols and abbreviations.

Notes:

WATER LEVEL OBSERVATIONS

While drilling

Terracon
4685 S. Ash Ave., Suite H-4
Tempe, Arizona

Boring Started: 12/3/2015
Boring Completed: 12/3/2015
Drill Rig: CME-55
Driller: D&S Drilling
Project No.: 65155124
Exhibit: A-6

THIS BORING LOG IS NOT VALID IF SEPARATED FROM ORIGINAL REPORT. GEO SMART LOG-NO WELL 65155124.GPJ TERRACON2015.GDT 12/16/15

BORING LOG NO. B-2

PROJECT: Gila-Knob T/L Rebuild

CLIENT: Civil Design & Engineering, Inc.
Phoenix, Arizona

SITE: North Gila Substation
Near Yuma, Arizona

LOCATION See Exhibit A-1

Latitude: 32.746788° Longitude: -114.488083°

GRAPHIC LOG	DEPTH	DEPTH (Ft.)	WATER LEVEL OBSERVATIONS	SAMPLE TYPE	FIELD TEST RESULTS	UNCONFINED COMPRESSIVE STRENGTH (psf)	WATER CONTENT (%)	DRY UNIT WEIGHT (pcf)	ATTERBERG LIMITS LL-PL-PI	PERCENT FINES
	POORLY GRADED SAND WITH GRAVEL (SP), trace silt, brown to light brown, very dense, no to weak cementation *(continued)*									
					50/4"					
		25								
					23-50/6"		2			
		30								
	groundwater encountered at approximately 32 feet while drilling		▽							
					19-44-50/3"		13			
		35								
	dense				11-15-19 N=34		15			
	40.5	40								
	Boring Terminated at 40.5 Feet									

Stratification lines are approximate. In-situ, the transition may be gradual.

Hammer Type: Automatic

Advancement Method:
Hollow Stem Auger

Abandonment Method:
Backfilled with cement-bentonite grout upon completion.

See Exhibit A-2 for description of field procedures
See Appendix B for description of laboratory procedures and additional data (if any).
See Appendix A for explanation of symbols and abbreviations.

Notes:

WATER LEVEL OBSERVATIONS

▽ *While drilling*

Terracon
4685 S. Ash Ave., Suite H-4
Tempe, Arizona

Boring Started: 12/3/2015 | Boring Completed: 12/3/2015
Drill Rig: CME-55 | Driller: D&S Drilling
Project No.: 65155124 | Exhibit: A-6

THIS BORING LOG IS NOT VALID IF SEPARATED FROM ORIGINAL REPORT. GEO SMART LOG-NO WELL 65155124.GPJ TERRACON2015.GDT 12/16/15

BORING LOG NO. B-3

PROJECT: Gila-Knob T/L Rebuild

CLIENT: Civil Design & Engineering, Inc.
Phoenix, Arizona

SITE: North Gila Substation
Near Yuma, Arizona

LOCATION See Exhibit A-1

Latitude: 32.749149° Longitude: -114.49197°

GRAPHIC LOG	DEPTH	DEPTH (Ft.)	WATER LEVEL OBSERVATIONS	SAMPLE TYPE	FIELD TEST RESULTS	UNCONFINED COMPRESSIVE STRENGTH (psf)	WATER CONTENT (%)	DRY UNIT WEIGHT (pcf)	ATTERBERG LIMITS LL-PL-PI	PERCENT FINES
	POORLY GRADED SAND WITH GRAVEL (SP), trace silt, brown, very loose to loose									
					2-2					
		5			6-7		2	98		
	6.0 **POORLY GRADED SAND WITH SILT (SP-SM)**, brown, medium dense									
		10			6-7-7 N=14		1			
	11.0 **POORLY GRADED SAND WITH GRAVEL (SP)**, trace silt, brown, medium dense									
		15			12-18		2	108		
	19.0 **FAT CLAY (CH)**, brown, very stiff to hard	20			9-13-21 N=34		19		76-25-51	97

Stratification lines are approximate. In-situ, the transition may be gradual.

Hammer Type: Automatic

Advancement Method:
Hollow Stem Auger

Abandonment Method:
Borings backfilled with soil cuttings upon completion.

See Exhibit A-2 for description of field procedures
See Appendix B for description of laboratory procedures and additional data (if any).
See Appendix A for explanation of symbols and abbreviations.

Notes:

WATER LEVEL OBSERVATIONS

Groundwater not encountered

Terracon
4685 S. Ash Ave., Suite H-4
Tempe, Arizona

Boring Started: 12/3/2015	Boring Completed: 12/3/2015
Drill Rig: CME-55	Driller: D&S Drilling
Project No.: 65155124	Exhibit: A-7

THIS BORING LOG IS NOT VALID IF SEPARATED FROM ORIGINAL REPORT. GEO SMART LOG-NO WELL 65155124.GPJ TERRACON2015.GDT 12/16/15

BORING LOG NO. B-3

PROJECT: Gila-Knob T/L Rebuild

CLIENT: Civil Design & Engineering, Inc.
Phoenix, Arizona

SITE: North Gila Substation
Near Yuma, Arizona

LOCATION See Exhibit A-1

Latitude: 32.749149° Longitude: -114.49197°

GRAPHIC LOG	DEPTH	DEPTH (Ft.)	WATER LEVEL OBSERVATIONS	SAMPLE TYPE	FIELD TEST RESULTS	UNCONFINED COMPRESSIVE STRENGTH (psf)	WATER CONTENT (%)	DRY UNIT WEIGHT (pcf)	ATTERBERG LIMITS LL-PL-PI	PERCENT FINES
	FAT CLAY (CH), brown, very stiff to hard *(continued)*									
					14-21	11297	21	98		
		25								
		30			14-19-23 N=42		23			
	very dense				18-32/3"		20	101		
		35								
	37.0 **SILTY SAND WITH GRAVEL (SM)**, light brown, very dense, moderate cementation									
		40			20-35-37 N=72		2			
	40.5 ***Boring Terminated at 40.5 Feet***									

Stratification lines are approximate. In-situ, the transition may be gradual.

Hammer Type: Automatic

Advancement Method:
Hollow Stem Auger

Abandonment Method:
Borings backfilled with soil cuttings upon completion.

See Exhibit A-2 for description of field procedures
See Appendix B for description of laboratory procedures and additional data (if any).
See Appendix A for explanation of symbols and abbreviations.

Notes:

WATER LEVEL OBSERVATIONS

Groundwater not encountered

Terracon
4685 S. Ash Ave., Suite H-4
Tempe, Arizona

Boring Started: 12/3/2015	Boring Completed: 12/3/2015
Drill Rig: CME-55	Driller: D&S Drilling
Project No.: 65155124	Exhibit: A-7

THIS BORING LOG IS NOT VALID IF SEPARATED FROM ORIGINAL REPORT. GEO SMART LOG-NO WELL 65155124.GPJ TERRACON2015.GDT 12/16/15

BORING LOG NO. B-4

PROJECT: Gila-Knob T/L Rebuild

CLIENT: Civil Design & Engineering, Inc.
Phoenix, Arizona

SITE: North Gila Substation
Near Yuma, Arizona

LOCATION See Exhibit A-1

Latitude: 32.748832° Longitude: -114.495473°

DEPTH	Description	DEPTH (Ft.)	WATER LEVEL OBSERVATIONS	SAMPLE TYPE	FIELD TEST RESULTS	UNCONFINED COMPRESSIVE STRENGTH (psf)	WATER CONTENT (%)	DRY UNIT WEIGHT (pcf)	ATTERBERG LIMITS LL-PL-PI	PERCENT FINES
	POORLY GRADED SAND WITH SILT AND GRAVEL (SP-SM), loose									
					5-10					
5.0	**POORLY GRADED SAND WITH SILT (SP-SM)**, trace gravel, medium dense	5			5-7-10 N=17		1		NP	5
					15-22					
11.0	**SILTY SAND (SM)**, trace gravel, dense to very dense, weak to moderate cementation	10								
		15			15-36-34 N=70		5			
		20			12-15-19 N=34		1			

Stratification lines are approximate. In-situ, the transition may be gradual.

Hammer Type: Automatic

Advancement Method:
Hollow Stem Auger

Abandonment Method:
Borings backfilled with soil cuttings upon completion.

See Exhibit A-2 for description of field procedures
See Appendix B for description of laboratory procedures and additional data (if any).
See Appendix A for explanation of symbols and abbreviations.

Notes:

WATER LEVEL OBSERVATIONS

Groundwater not encountered

Terracon
4685 S. Ash Ave., Suite H-4
Tempe, Arizona

Boring Started: 12/4/2015
Boring Completed: 12/4/2015
Drill Rig: CME-55
Driller: D&S Drilling
Project No.: 65155124
Exhibit: A-8

THIS BORING LOG IS NOT VALID IF SEPARATED FROM ORIGINAL REPORT. GEO SMART LOG-NO WELL 65155124.GPJ TERRACON2015.GDT 12/16/15

BORING LOG NO. B-4

PROJECT: Gila-Knob T/L Rebuild

CLIENT: Civil Design & Engineering, Inc.
Phoenix, Arizona

SITE: North Gila Substation
Near Yuma, Arizona

LOCATION See Exhibit A-1

Latitude: 32.748832° Longitude: -114.495473°

DEPTH	GRAPHIC LOG	DEPTH (Ft.)	WATER LEVEL OBSERVATIONS	SAMPLE TYPE	FIELD TEST RESULTS	UNCONFINED COMPRESSIVE STRENGTH (psf)	WATER CONTENT (%)	DRY UNIT WEIGHT (pcf)	ATTERBERG LIMITS LL-PL-PI	PERCENT FINES
SILTY SAND (SM), trace gravel, dense to very dense, weak to moderate cementation *(continued)*										
medium dense		25			16-30		2	94		
28.0										
FAT CLAY (CH), brown, hard		30			10-13-17 N=30		20			
		35			15-29		20	92		
40.5		40			16-20-24 N=44		20			
Boring Terminated at 40.5 Feet										

Stratification lines are approximate. In-situ, the transition may be gradual.

Hammer Type: Automatic

Advancement Method:
Hollow Stem Auger

Abandonment Method:
Borings backfilled with soil cuttings upon completion.

See Exhibit A-2 for description of field procedures
See Appendix B for description of laboratory procedures and additional data (if any).
See Appendix A for explanation of symbols and abbreviations.

Notes:

WATER LEVEL OBSERVATIONS

Groundwater not encountered

Terracon
4685 S. Ash Ave., Suite H-4
Tempe, Arizona

Boring Started: 12/4/2015	Boring Completed: 12/4/2015
Drill Rig: CME-55	Driller: D&S Drilling
Project No.: 65155124	Exhibit: A-8

THIS BORING LOG IS NOT VALID IF SEPARATED FROM ORIGINAL REPORT. GEO SMART LOG-NO WELL 65155124.GPJ TERRACON2015.GDT 12/16/15