MATERIAL LIST					
ITEM NO.	OGW ASSEMBLY QUANTITY				DESCRIPTION
	SL	SP	TV	TH	
1	1	1	2	2	ANCHOR SHACKLE, BNK
2			1	1	COMPRESSION DEADEND, EYE TYPE
3	1				Y-CLEVIS EYE, BNK
4	1	1			SUSPENSION CLAMP, BNK
5		1			Y-CLEVIS EYE 90°, BNK

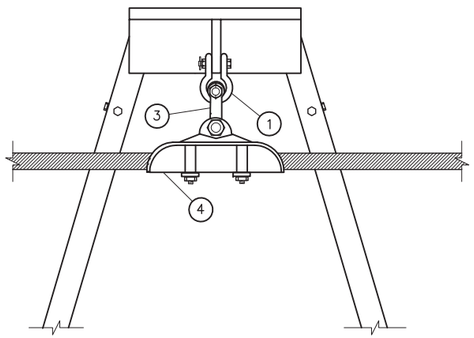

SUSPENSION ASSEMBLY OGW-SL

FOR ATTACHMENT PLATE AT RIGHT ANGLE TO OGW

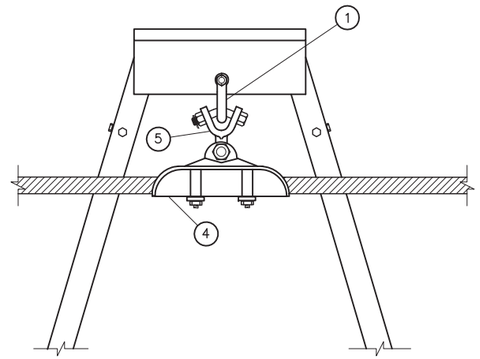

SUSPENSION ASSEMBLY OGW-SP

FOR ATTACHMENT PLATE IN PLANE OF OGW

NOTES

1. BNK INDICATES BOLT, NUT, AND STAINLESS STEEL COTTER KEY REQUIRED.

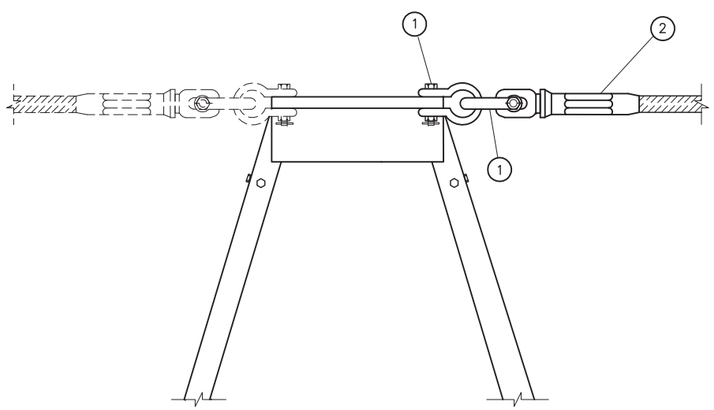

TENSION ASSEMBLY OGW-TV

FOR HORIZONTAL ATTACHMENT PLATE

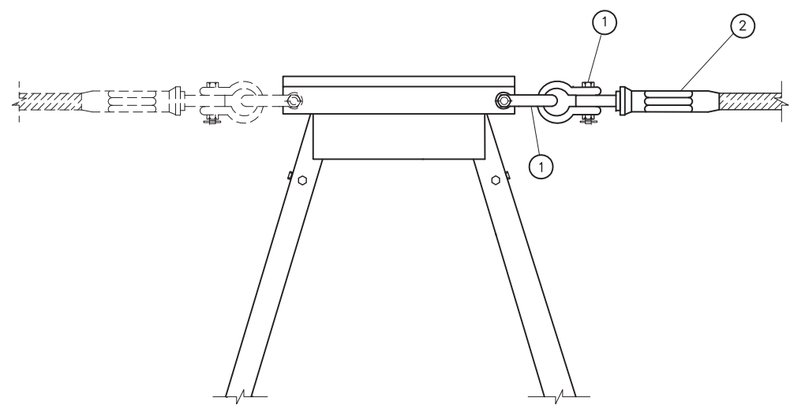

TENSION ASSEMBLY OGW-TH

FOR VERTICAL ATTACHMENT PLATE

NOT TO SCALE

C	7-6-04 A7-FSC	REVISED TENSION ASSEMBLIES TO BE CONSISTENT WITH MATERIAL LIST QUANITIES. ADDED QUANTITIES AND TYPE DESIGNATIONS.
B	7-15-03 A7-RC	REVISED TITLE BLOCK ONLY.
A	5-17-95 A2-RMC	REMOVED STRUCTURE GROUNDING

UNITED STATES DEPARTMENT OF ENERGY
WESTERN AREA POWER ADMINISTRATION
CORPORATE SERVICES OFFICE – LAKEWOOD, COLORADO

TRANSMISSION LINE STANDARDS
STEEL TOWERS
OVERHEAD GROUND WIRE ASSEMBLY

DESIGNED SRR APPROVED ROSS M. CLARK
CHIEF, TRANSMISSION LINE ELECTRICAL BRANCH

C A F	MARCH 9, 1993	41	1017

Mar 23, 2006- 10:57am Plotted By: Sesia S:\Engineering\Standard Drawings\41\41_1017c.dwg Last Saved By: Cox IMAGES:

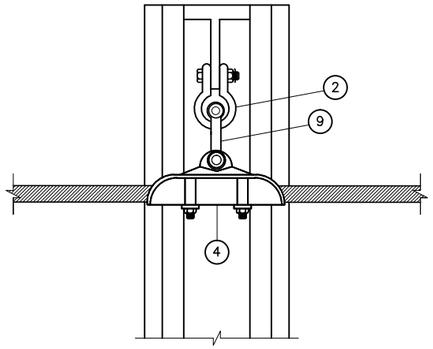

SUSPENSION ASSEMBLY OGW-SL
FOR ATTACHMENT HOLE IN-LINE WITH OGW

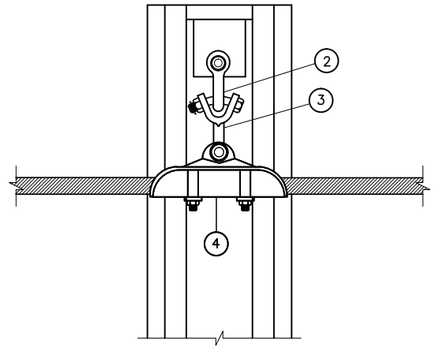

SUSPENSION ASSEMBLY OGW-SP
FOR ATTACHMENT HOLE PERPENDICULAR TO OGW

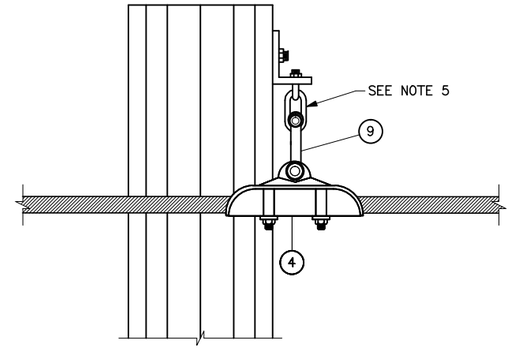

SUSPENSION ASSEMBLY OGW-SH
FOR ATTACHMENT TO STEEL ANGLE

MATERIALS LIST									
ITEM NO.	OGW ASSEMBLY QUANTITY								DESCRIPTION
	SL	SP	SH	SYL	SYP	TV	TH	TY	
1				1					Y-CLEVIS CLEVIS, BNK
2	1	1		1	1	2	2	4	ANCHOR SHACKLE, BNK
3		1							Y-CLEVIS EYE 90°, BNK
4	1	1	1	2	2				SUSPENSION CLAMP, BNK
5					1				Y-CLEVIS CLEVIS 90°, BNK
6				2	2				CLEVIS EYE, BNK
7				1	1			1	YOKE PLATE
8						1	1	2	COMPRESSION DEADEND, EYE TYPE
9	1		1						Y-CLEVIS EYE, BNK

NOTES

1. BNK INDICATES BOLT, NUT AND STAINLESS STEEL COTTER KEY REQUIRED.
2. SEE SPECIFICATIONS FOR STRENGTH RATING OF COUPLING HARDWARE.
3. ASSEMBLIES OGW-SYL AND OGW-SYP ARE USED FOR RUNNING ANGLES OF 30° TO 60°.
4. LENGTH OF SUSPENSION CLAMP PLUS 3 INCHES MINIMUM.
5. FURNISHED AS PART OF STRUCTURE.

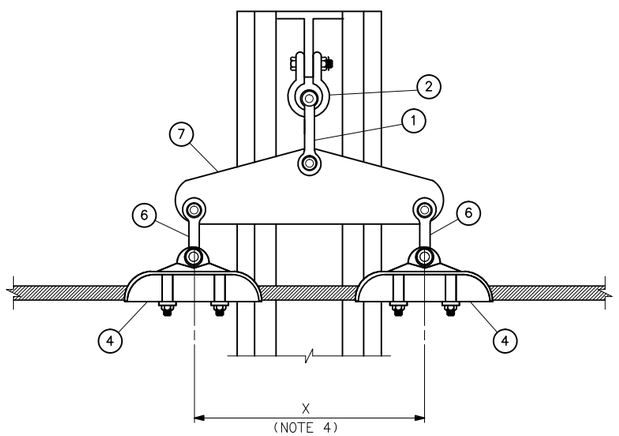

SUSPENSION ASSEMBLY OGW-SYL
FOR ATTACHMENT HOLE IN-LINE WITH OGW

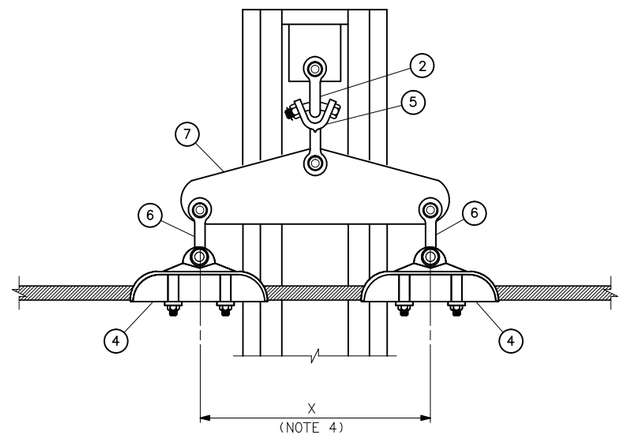

SUSPENSION ASSEMBLY OGW-SYP
FOR ATTACHMENT HOLE PERPENDICULAR TO OGW

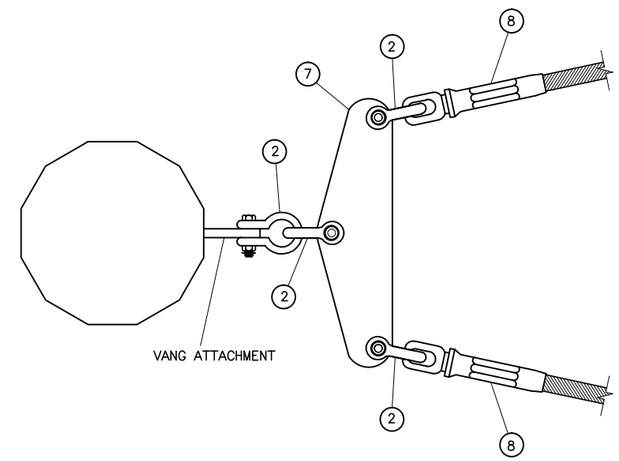

TENSION ASSEMBLY OGW-TY
FOR HORIZONTAL ATTACHMENT HOLE
(OVERHEAD VIEW)

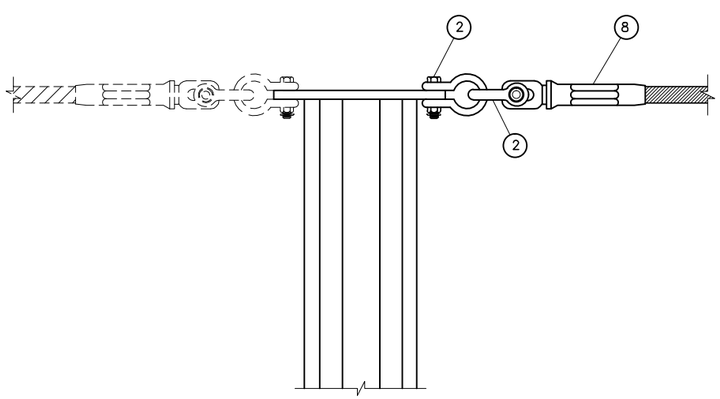

TENSION ASSEMBLY OGW-TV
FOR VERTICAL ATTACHMENT HOLE

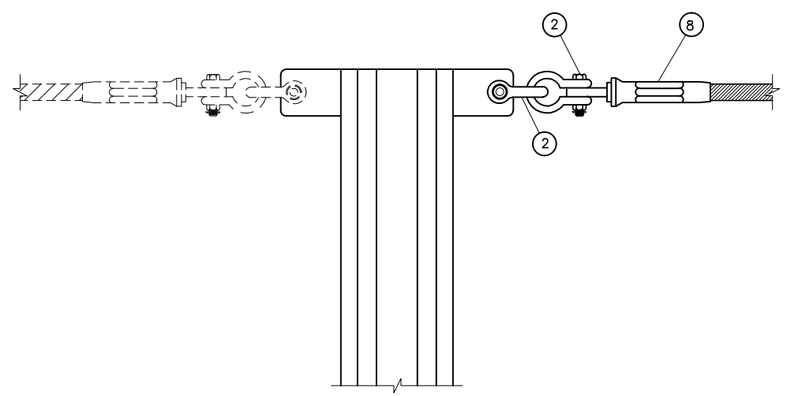

TENSION ASSEMBLY OGW-TH
FOR HORIZONTAL ATTACHMENT HOLE

NOT TO SCALE

C	7-15-03 A7-RC	REVISED TITLE BLOCK ONLY.
B	3-1-00 A3-RMC	MINOR CHANGES.
A	11-20-98 A3-RMC	ATTACHMENT TYPES OGW-SH AND OGW-TY WERE ADDED.

UNITED STATES DEPARTMENT OF ENERGY
WESTERN AREA POWER ADMINISTRATION
CORPORATE SERVICES OFFICE - LAKEWOOD, COLORADO

TRANSMISSION LINE STANDARDS STEEL AND CONCRETE POLE STRUCTURES OVERHEAD GROUND WIRE ASSEMBLY

DESIGNED SRR APPROVED ROSS M. CLARK
CHIEF, TRANSMISSION LINE BRANCH

A	NOVEMBER 14, 1995	41	1018

Nov 27, 2012- 2:56pm Plotted By: lampmon C:\Documents and Settings\lampmon\Desktop\copy_41_1018c.dwg Last Saved By: lampmon IMAGES:

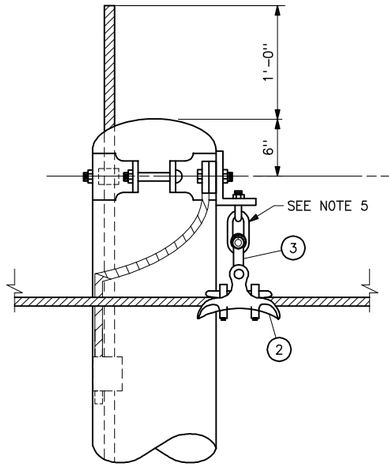

SUSPENSION ASSEMBLY OGW-SA

FOR ATTACHMENT TO STEEL ANGLE
OR SUPPORT BRACKET

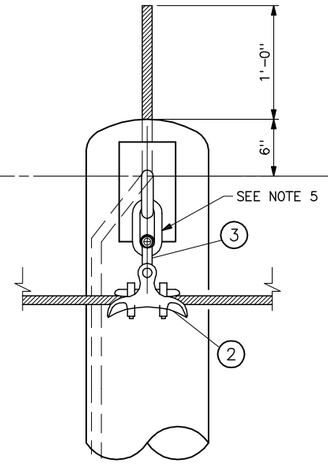

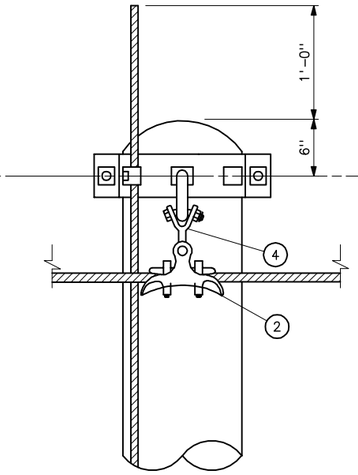

SUSPENSION ASSEMBLY OGW-PB

FOR ATTACHMENT TO POLE BAND

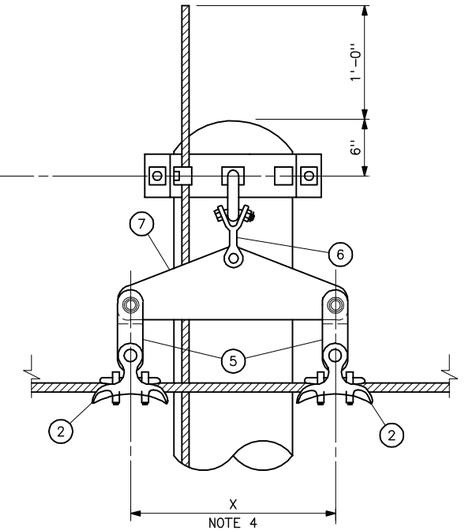

SUSPENSION ASSEMBLY OGW-PBY

FOR ATTACHMENT TO POLE BAND

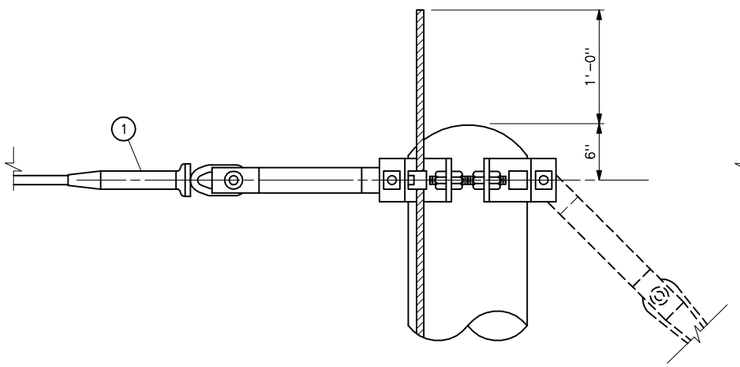

TENSION ASSEMBLY OGW-TW

FOR ATTACHMENT TO EXTENSION LINK, ONE WAY

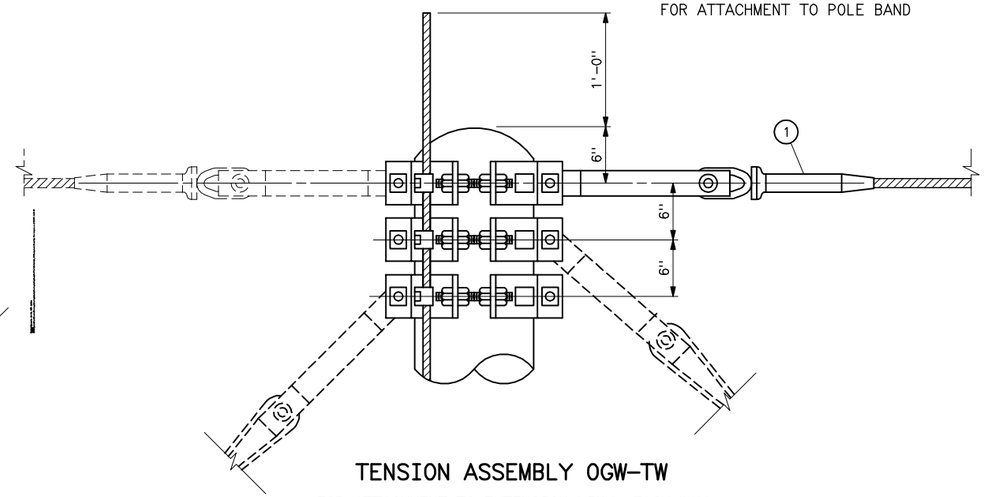

TENSION ASSEMBLY OGW-TW

FOR ATTACHMENT TO EXTENSION LINK, EACH WAY

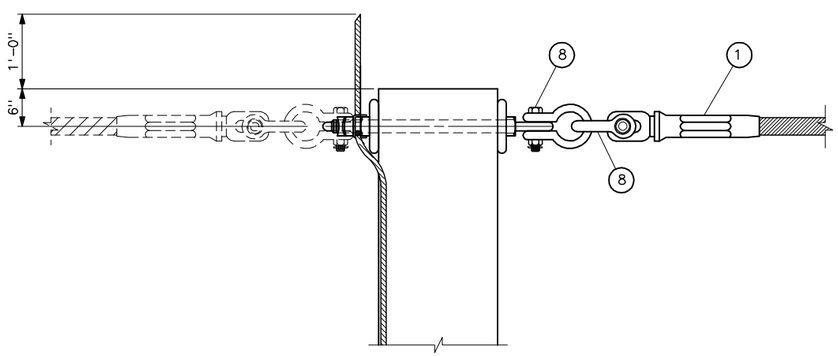

TENSION ASSEMBLY OGW-TV

FOR VERTICAL ATTACHMENT HOLE
(NOTE 6)

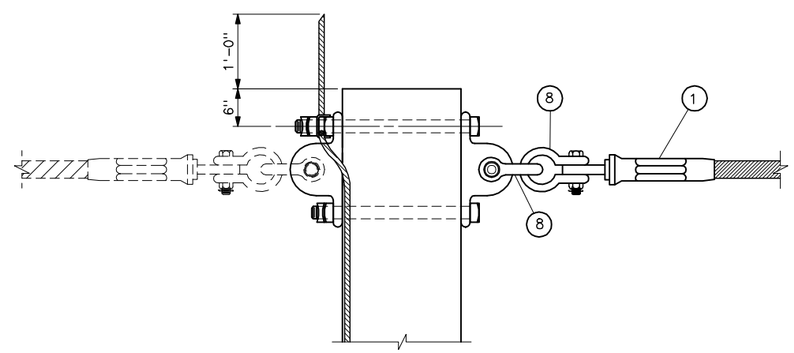

TENSION ASSEMBLY OGW-TH

FOR HORIZONTAL ATTACHMENT HOLE

MATERIAL LIST

ITEM NO.	OGW ASSEMBLY QUANTITY SA	PB	PBY	TH	TV	TW	DESCRIPTION
1				1	1	1	COMPRESSION DEADEND, EYE TYPE
2	1	1	2				SUSPENSION CLAMP,BNK (SEE NOTE 7)
3	1						Y-CLEVIS EYE,BNK (SEE NOTE 7)
4		1					Y-CLEVIS EYE 90°,BNK (SEE NOTE 7)
5			2				CLEVIS EYE, BNK
6			1				Y-CLEVIS CLEVIS 90°, BNK
7			1				YOKE PLATE
8				2	2		ANCHOR SHACKLE, BNK

NOTES

1. BNK INDICATE BOLT, NUT, AND STAINLESS STEEL COTTER KEY REQUIRED.
2. SEE SPECIFICATIONS FOR STRENGTH RATING OF COUPLING HARDWARE.
3. ASSEMBLY OGW-PBY SHALL BE USED FOR LINE ANGLES OF 30° TO 60°.
4. LENGTH OF SUSPENSION CLAMP PLUS 3 INCHES MINIMUM.
5. CHAIN LINK FURNISHED AS PART OF STRUCTURE FOR NEW CONSTRUCTION.
6. USE OGW-TV FOR GLUED LAMINATED WOOD TENSION STRUCTURES WITH LINE ANGLES GREATER THAN 1°.
7. SIZE WIDTH OF EYE ON Y-CLEVIS TO FIT BETWEEN EARS OF SUSPENSION CLAMP.

D	4-19-11 A7-KKR	ADDED SUPPORT BRACKET ASSEMBLY AND OGW-TH, OGW-TV ASSEMBLIES. ADDED NOTE 6 AND 7.
C	7-2-04 A7-FSC	REVISED OGW-TW TO BE CONSISTENT WITH MATERIAL LIST QUANITIES. REVISED NOTE 5.
B	7-15-03 A7-RC	REVISED TITLE BLOCK ONLY.
A	10-13-95 A2-RMC	ADDED ASSEMBLY NAMES AND ASSEMBLY OGW-PBY.

UNITED STATES DEPARTMENT OF ENERGY
WESTERN AREA POWER ADMINISTRATION
CORPORATE SERVICES OFFICE - LAKEWOOD, COLORADO

TRANSMISSION LINE STANDARDS
WOOD POLE STRUCTURES
OVERHEAD GROUND WIRE ASSEMBLY

DESIGNED STEVE ROCK APPROVED ROSS M. CLARK
CHIEF, TRANSMISSION LINE BRANCH

SIZE A	AUGUST 21, 1995	41	1019

Plotted By: seela Apr 26, 2011- 8:29am
Saved By: Eva Lampman on 4/19/2011 9:30 AM

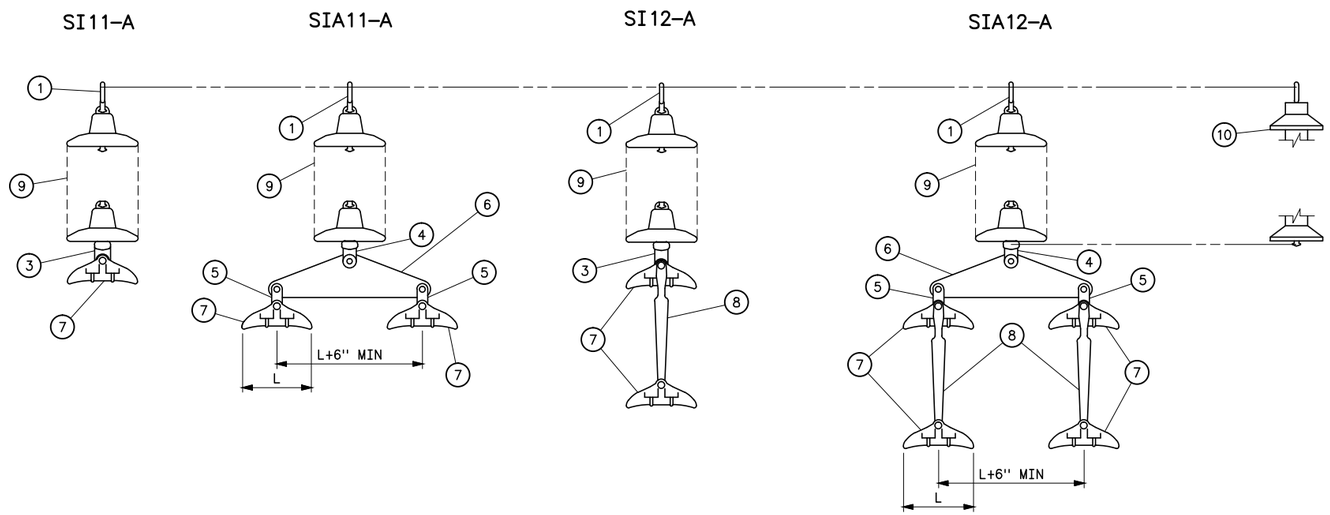

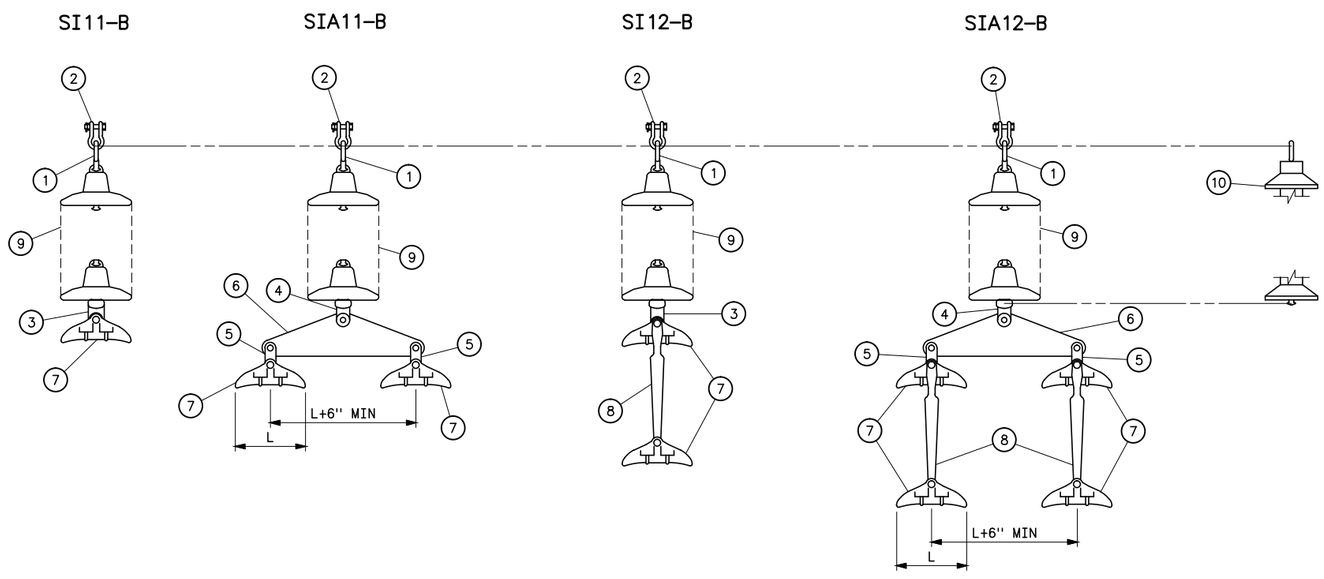

MATERIALS LIST

ITEM NO.	DESCRIPTION
1	OVAL EYE BALL
2	ANCHOR SHACKLE, BNK
3	SOCKET EYE
4	SOCKET CLEVIS, BNK
5	CLEVIS EYE, BNK
6	YOKE PLATE
7	SUSPENSION CLAMP, BNK
8	VERTICAL BUNDLE YOKE, 18'' SPACING
9	INSULATOR STRING, PORCELAIN OR GLASS UNITS
10	INSULATOR STRING, COMPOSITE, OVAL EYE–BALL (LENGTH AS SPECIFIED)

NOTES

1. BNK INDICATES BOLT, NUT AND STAINLESS STEEL COTTER KEY REQUIRED.
2. STRENGTH OF HARDWARE COMPONENTS SHALL BE EQUAL TO OR GREATER THAN THE INSULATOR ASSEMBLY ULTIMATE STRENGTH, EXCEPT THAT PARALLEL COMPONENTS IN INSULATOR ASSEMBLIES SIA11 AND SIA12 MAY HAVE 50% OF ASSEMBLY ULTIMATE STRENGTH.

TABLE A – PORCELAIN OR GLASS UNITS

VOLTAGE (KV)	UNIT QUANTITY PER ASSEMBLY			
	SI11 AND SI12		SIA11 AND SIA12	
	WOOD STRUCTURES	STEEL STRUCTURES	WOOD STRUCTURES	STEEL STRUCTURES
69	4	6	6	6
115	7	9	9	9
138	8	10	10	10
161	10	11	11	11
230	12	14	13	14

INSULATOR ASSEMBLY TYPE NO.

EXAMPLE: SIA11 – B

- TYPE OF STRUCTURE ATTACHMENT HARDWARE
- ONE (1) OR TWO (2) SUBCONDUCTORS
- SINGLE (1) OR DOUBLE (2) INSULATOR STRING
- RUNNING ANGLE APPLICATION 15° – 60°
- ''I–STRING''
- SUSPENSION ASSEMBLY

SUSPENSION INSULATOR ASSEMBLIES

ULTIMATE INSULATOR ASSEMBLY STRENGTH AS SPECIFIED

(NOTE 2)

C	9–29–16 A7–RC	ADDED GLASS AND CHANGED POLYMER FIBERGLASS TO COMPOSITE.
B	7–15–03 A7–RC	REVISED TITLE BLOCK ONLY.
A	6–29–00 A3	REVISED ULTIMATE STRENGTH REQUIREMENTS. MINOR REVISIONS.

UNITED STATES DEPARTMENT OF ENERGY
WESTERN AREA POWER ADMINISTRATION
CORPORATE SERVICES OFFICE – LAKEWOOD, COLORADO

TRANSMISSION LINE STANDARDS
SUSPENSION INSULATOR ASSEMBLIES
SINGLE STRING

DESIGNED F.S. COOK APPROVED ROSS CLARK ELECTRICAL ENGINEERING MANAGER

CAE	OCTOBER 10, 1997	41	1020

Plotted By:Seela Sep 29, 2016– 1:28pm IMAGES:
S:\projects\Misc\StandardDrawings\Drawings\DesignDrawings\xDwgsReadyForFinal\Scripts\41_1020c.dwg Last Saved By: Seela, Holly (CONTR) on 9/29/2016 1:28 PM
XREF(S):

SIA21–A

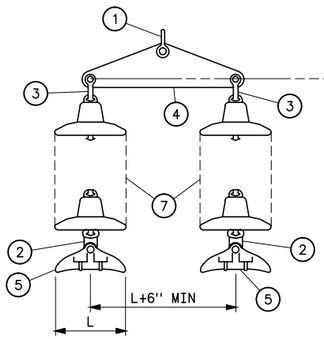

SIA22–A

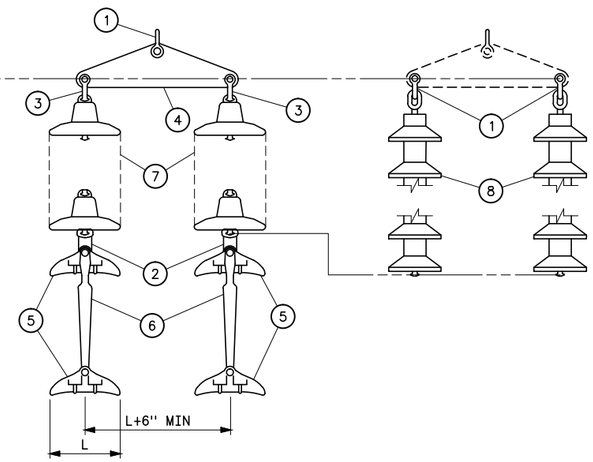

SIA21–B

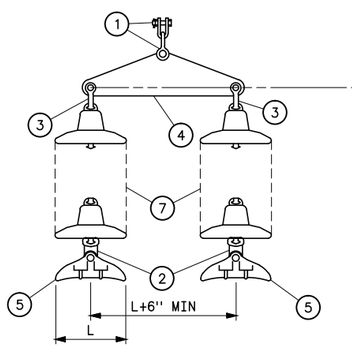

SIA22–B

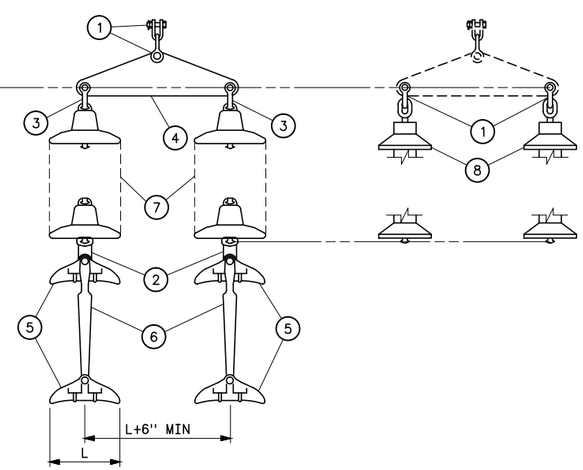

SUSPENSION INSULATOR ASSEMBLIES

ULTIMATE INSULATOR ASSEMBLY STRENGTH AS SPECIFIED

(NOTE 2)

MATERIALS LIST

ITEM NO.	DESCRIPTION
1	ANCHOR SHACKLE, BNK
2	SOCKET EYE
3	CLEVIS BALL, BNK
4	YOKE PLATE
5	SUSPENSION CLAMP, BNK
6	VERTICAL BUNDLE YOKE, 18" SPACING
7	INSULATOR STRING, PORCELAIN OR GLASS UNITS
8	INSULATOR STRING, COMPOSITE, OVAL EYE–BALL (LENGTH AS SPECIFIED)

NOTES

1. BNK INDICATES BOLT, NUT AND STAINLESS STEEL COTTER KEY REQUIRED.
2. STRENGTH OF HARDWARE COMPONENTS SHALL BE EQUAL TO OR GREATER THAN THE INSULATOR ASSEMBLY ULTIMATE STRENGTH, EXCEPT THAT PARALLEL COMPONENTS IN INSULATOR ASSEMBLIES SIA21 AND SIA22 MAY HAVE 50% OF ASSEMBLY ULTIMATE STRENGTH.

TABLE A – PORCELAIN OR GLASS UNITS

VOLTAGE (KV)	UNIT QUANTITY PER ASSEMBLY	
	SIA21 AND SIA22	
	WOOD STRUCTURES	STEEL STRUCTURES
69	12	12
115	18	18
138	20	20
161	22	22
230	26	28

INSULATOR ASSEMBLY TYPE NO.

EXAMPLE: SIA22 – B

- TYPE OF STRUCTURE ATTACHMENT HARDWARE
- ONE (1) OR TWO (2) SUBCONDUCTORS
- SINGLE (1) OR DOUBLE (2) INSULATOR STRING
- RUNNING ANGLE APPLICATION 15° – 60°
- "I–STRING"
- SUSPENSION ASSEMBLY

C	9–29–16 A7–RC	ADDED GLASS AND CHANGED POLYMER FIBERGLASS TO COMPOSITE.
B	7–15–03 A7–RC	REVISED TITLE BLOCK ONLY.
A	6–29–00 A2–RMC	REVISED ULTIMATE STRENGTH REQUIREMENT. MINOR REVISIONS.

UNITED STATES DEPARTMENT OF ENERGY
WESTERN AREA POWER ADMINISTRATION
CORPORATE SERVICES OFFICE – LAKEWOOD, COLORADO

TRANSMISSION LINE STANDARDS
SUSPENSION INSULATOR ASSEMBLIES
DOUBLE STRING

DESIGNED F.S. COOK APPROVED ROSS CLARK
ELECTRICAL ENGINEERING MANAGER

CAE | OCTOBER 10, 1997 | 41 | 1021

Plotted By:Seela Sep 29, 2016– 1:29pm IMAGES:
S:\projects\Misc\StandardDrawings\Drawings\DesignDrawings\xDwgsReadyForFinal\Scripts\41_1021c.dwg Last Saved By: Seela, Holly (CONTR) on 9/29/2016 1:29 PM
XREF(S):

TABLE A – PORCELAIN OR GLASS UNITS		
VOLTAGE (KV)	UNIT QUANTITY PER ASSEMBLY	
	T11 AND T12	
	WOOD STRUCTURES	STEEL STRUCTURES
69	5	7
115	8	10
138	10	11
161	11	12
230	13	15

MATERIALS LIST	
ITEM NO.	DESCRIPTION
1	OVAL EYE BALL
2	ANCHOR SHACKLE, BNK
3	SOCKET CLEVIS, BNK
4	SOCKET CLEVIS, HOT LINE, BNK
5	CLEVIS BALL, HOT LINE, BNK
6	CHAIN LINK
7	YOKE PLATE
8	EXTENSION STRAP (LENGTH AS SPECIFIED)
9	COMPRESSION DEAD END FITTING, EYE, SINGLE TONGUE
10	COMPRESSION JUMPER TERMINAL
11	INSULATOR STRING, PORCELAIN OR GLASS UNITS
12	SOCKET EYE, HOT LINE
13	BALL EYE, HOT LINE
14	STRAIN CLAMP, BNK
15	CLEVIS EYE, BNK

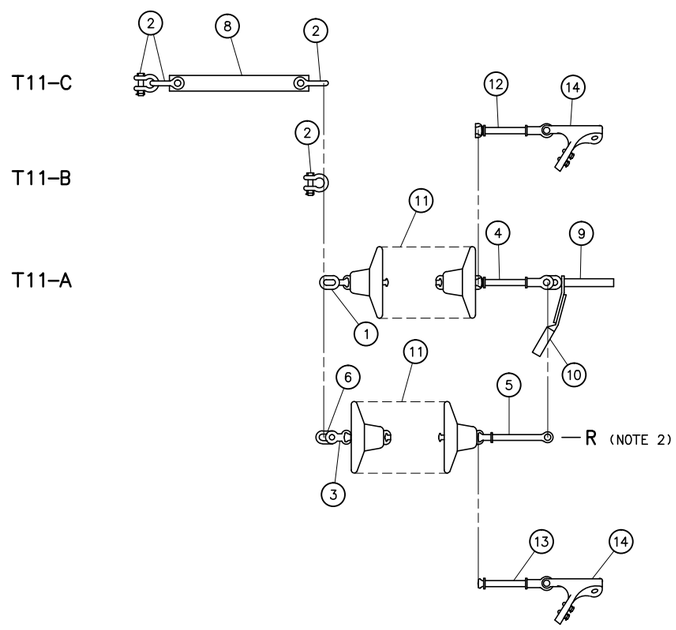

TYPE T11
SINGLE INSULATOR STRING, ONE SUBCONDUCTOR

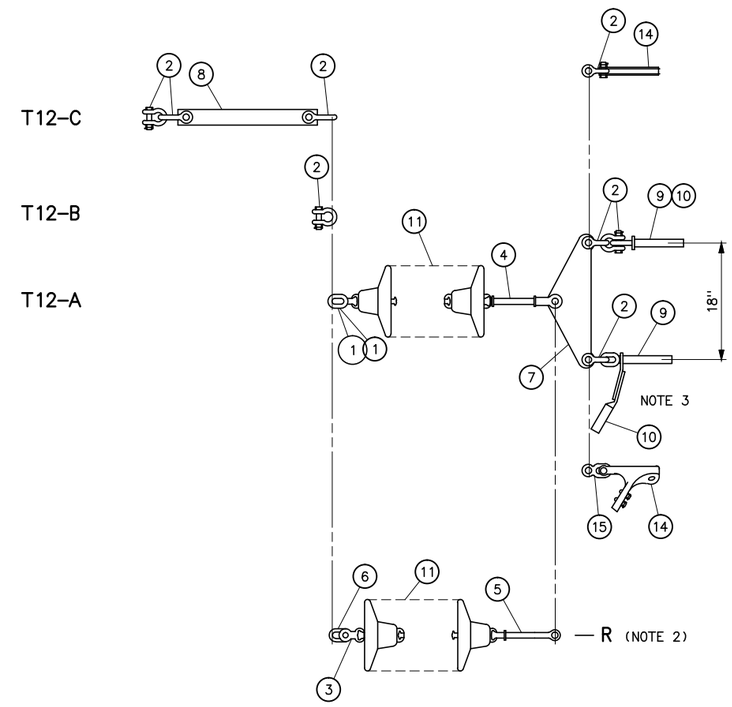

TYPE T12
SINGLE INSULATOR STRING, TWO SUBCONDUCTORS

NOTES

1. BNK INDICATES BOLT, NUT AND STAINLESS STEEL COTTER KEY REQUIRED.
2. ASSEMBLIES DESIGNATED WITH AN R SHALL HAVE THE INSULATOR CAPS AT THE CONDUCTOR END OF THE ASSEMBLY AS SHOWN, AND ARE FOR USE WHEN THE CONDUCTOR ATTACHMENT POINT IS AT A HIGHER ELEVATION THAN THE STRUCTURE ATTACHMENT POINT.
3. FOR DOUBLE CONDUCTOR ASSEMBLIES, THE PADS ON THE CONDUCTOR DEADENDS SHALL BE TURNED OUT TO EACH SIDE IN ORDER TO CLEAR HARDWARE AND PROVIDE A SMOOTH TRANSITION INTO A BUNDLE AT THE JUMPER INSULATOR ASSEMBLY.
4. DUE TO TORSIONAL STRESS, COMPOSITE INSULATORS SHALL NOT BE USED IN SINGLE STRING TENSION CONFIGURATIONS.

INSULATOR ASSEMBLY TYPE NO.

EXAMPLE: T12 – B

- TYPE OF STRUCTURE ATTACHMENT HARDWARE
- ONE (1) OR TWO (2) SUBCONDUCTORS
- SINGLE (1) OR DOUBLE (2) INSULATOR STRING
- TENSION ASSEMBLY

SINGLE STRING TENSION INSULATOR ASSEMBLIES

ULTIMATE INSULATOR ASSEMBLY STRENGTH AS SPECIFIED

(NOTE 4)

C	9–29–16 A7–RC	ADDED GLASS AND CHANGED POLYMER FIBERGLASS TO COMPOSITE.
B	7–15–03 A7–RC	REVISED TITLE BLOCK ONLY.
A	6/13/00 A3–RMC	ADDED STRAIN CLAMPS

UNITED STATES DEPARTMENT OF ENERGY
WESTERN AREA POWER ADMINISTRATION
CORPORATE SERVICES OFFICE – LAKEWOOD, COLORADO

TRANSMISSION LINE STANDARDS
TENSION INSULATOR ASSEMBLIES
SINGLE STRING

DESIGNED F.S. COOK APPROVED ROSS CLARK
ELECTRICAL ENGINEERING MANAGER

CAD | OCTOBER 10, 1997 | 41 | 1022

Plotted By: Seela Sep 29, 2016– 1:29pm IMAGES:
S:\projects\Misc\StandardDrawings\DesignDrawings\xDwgsReadyForFinal\Scripts\V41_1022c.dwg Last Saved By: Seela, Holly (CONTR) on 9/29/2016 1:29 PM
XREF(S):

DOUBLE STRING
TENSION INSULATOR ASSEMBLIES

ULTIMATE INSULATOR ASSEMBLY STRENGTH AS SPECIFIED

(NOTE 2)

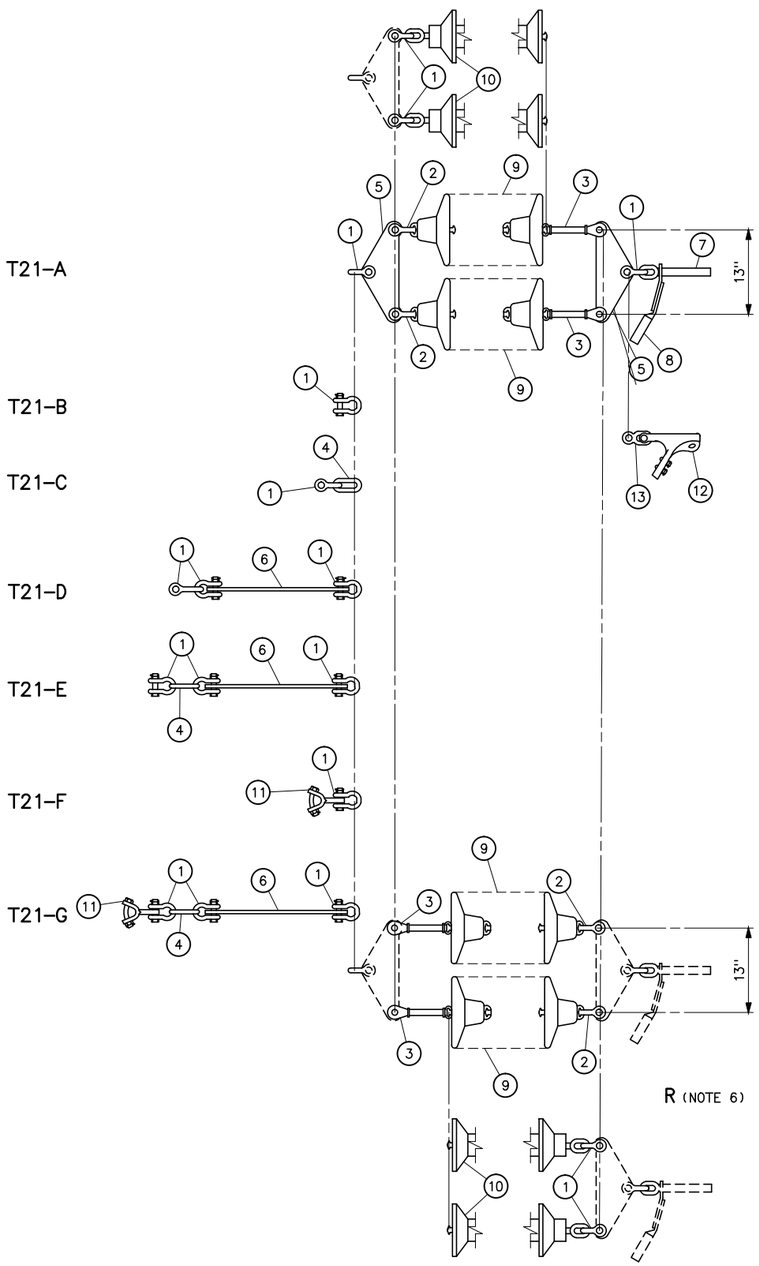

T21

DOUBLE INSULATOR STRING, SINGLE CONDUCTOR

(NOTE 3)

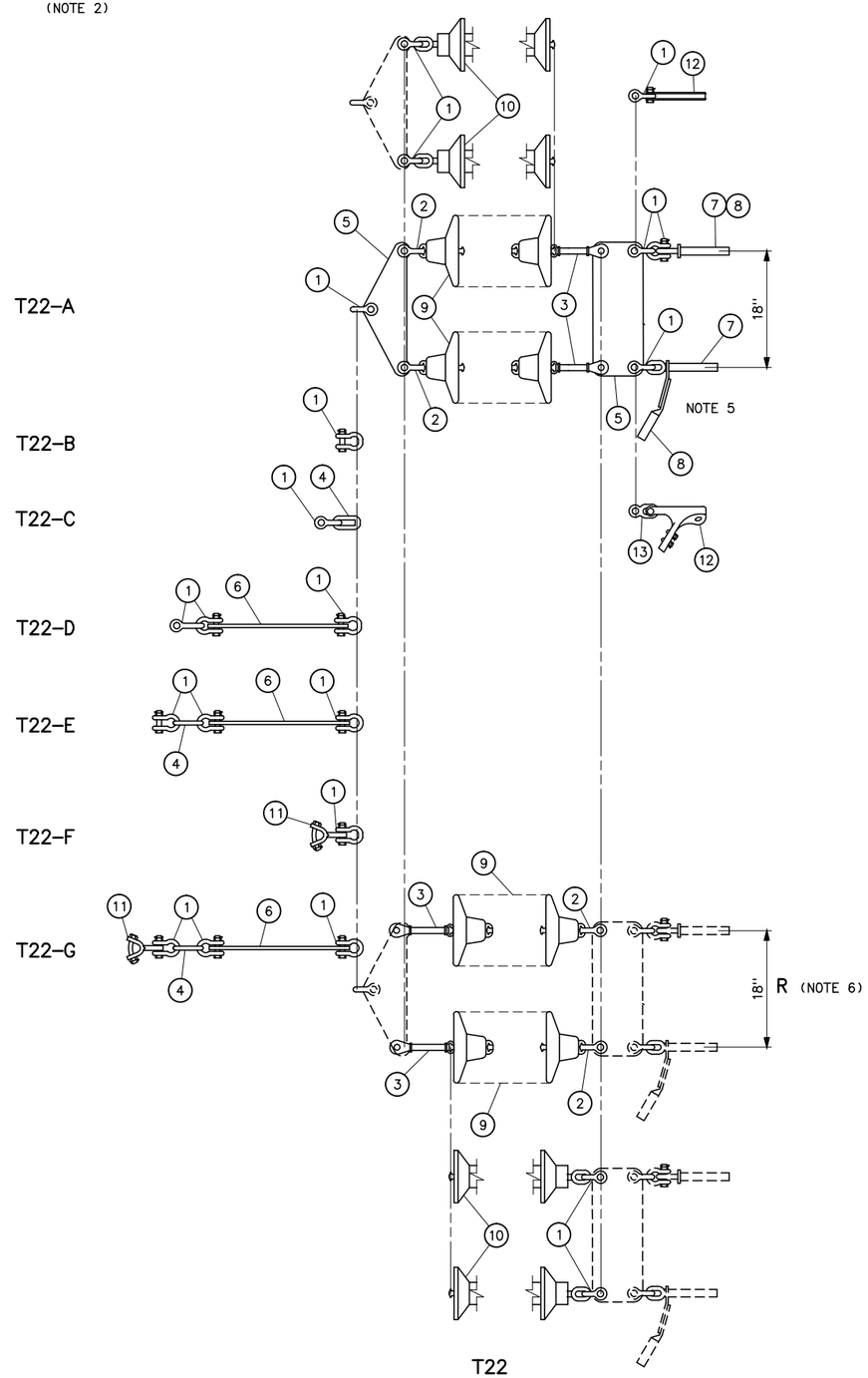

T22

DOUBLE INSULATOR STRING, DOUBLE CONDUCTOR

(NOTE 4)

MATERIALS LIST

ITEM NO.	DESCRIPTION
1	ANCHOR SHACKLE, BNK
2	CLEVIS BALL, BNK
3	SOCKET CLEVIS, HOT LINE, BNK
4	CHAIN LINK
5	YOKE PLATE, WITH WORKING HOLE
6	EXTENSION STRAP (LENGTH AS SPECIFIED)
7	COMPRESSION DEAD END FITTING, EYE, SINGLE TONGUE
8	COMPRESSION JUMPER TERMINAL
9	INSULATOR STRING, PORCELAIN OR GLASS UNITS
10	INSULATOR STRING, COMPOSITE, OVAL EYE-BALL (LENGTH AS SPECIFIED)
11	Y-CLEVIS EYE, BNK
12	STRAIN CLAMP, BNK
13	CLEVIS EYE, BNK

NOTES

1. BNK INDICATES BOLT, NUT AND STAINLESS STEEL COTTER KEY REQUIRED.
2. STRENGTH OF HARDWARE COMPONENTS SHALL BE EQUAL TO OR GREATER THAN THE INSULATOR ASSEMBLY ULTIMATE STRENGTH, EXCEPT THAT PARALLEL COMPONENTS IN DOUBLE INSULATOR ASSEMBLIES T21, AND T22 MAY HAVE 50% OF ULTIMATE ASSEMBLY STRENGTH.
3. DOUBLE STRING, SINGLE CONDUCTOR ASSEMBLIES SHALL HAVE THE INSULATOR STRING PARALLEL IN A HORIZONTAL PLANE.
4. DOUBLE STRING, DOUBLE CONDUCTOR ASSEMBLIES SHALL HAVE THE INSULATOR STRINGS PARALLEL IN THE SAME PLANE AS THE CONDUCTORS (USUALLY VERTICAL).
5. FOR DOUBLE CONDUCTOR ASSEMBLIES, THE PADS ON THE CONDUCTOR DEADENDS SHALL BE TURNED OUT TO EACH SIDE IN ORDER TO CLEAR HARDWARE AND PROVIDE A SMOOTH TRANSITION INTO A BUNDLE AT THE JUMPER INSULATOR ASSEMBLY.
6. ASSEMBLIES DESIGNATED WITH AN R SHALL HAVE THE INSULATOR CAPS AT THE CONDUCTOR END OF THE ASSEMBLY AS SHOWN, AND ARE FOR USE WHEN THE CONDUCTOR ATTACHMENT POINT IS AT A HIGHER ELEVATION THAN THE STRUCTURE ATTACHMENT POINT.

TABLE A – PORCELAIN OR GLASS UNITS

VOLTAGE (KV)	UNIT QUANTITY PER ASSEMBLY T21 AND T22	
	WOOD STRUCTURES	STEEL STRUCTURES
69	10	14
115	16	20
138	20	22
161	22	24
230	26	30

INSULATOR ASSEMBLY TYPE NO.

EXAMPLE: T22 – B

- TYPE OF STRUCTURE ATTACHMENT HARDWARE
- ONE (1) OR TWO (2) SUBCONDUCTORS
- SINGLE (1) OR DOUBLE (2) INSULATOR STRING
- TENSION ASSEMBLY

D	07-11-07 A7-RMC	REVISED DESCRIPTION OF MATERIAL ITEM NO. 5
C	7-15-03 A7-RC	REVISED TITLE BLOCK ONLY.
B	6/13/00 A3-RMC	ADDED STRAIN CLAMPS.
E	9-29-16 A7-RC	ADDED GLASS AND CHANGED POLYMER FIBERGLASS TO COMPOSITE.

UNITED STATES DEPARTMENT OF ENERGY
WESTERN AREA POWER ADMINISTRATION
CORPORATE SERVICES OFFICE – LAKEWOOD, COLORADO

TRANSMISSION LINE STANDARDS
TENSION INSULATOR ASSEMBLIES
DOUBLE STRING

DESIGNED F.S. COOK APPROVED ROSS CLARK ELECTRICAL ENGINEERING MANAGER

CAD	OCTOBER 10, 1997	41	1023

Plotted By:Seela Sep 29, 2016- 1:30pm IMAGES:
S:\projects\Misc\StandardDrawings\DesignDrawings\xDwgsReadyForFinal\Scripts\41_1023e.dwg Last Saved By: Seela, Holly (CONTR) on 9/29/2016 1:30 PM
XREF(S):

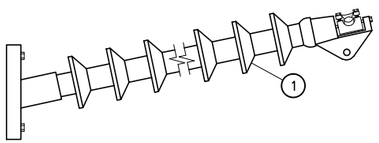

ASSEMBLY TYPE HF1–F
SINGLE CONDUCTOR
FIXED
FLAT BASE

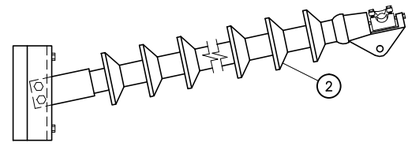

ASSEMBLY TYPE HF1–G
SINGLE CONDUCTOR
FIXED
GAIN BASE

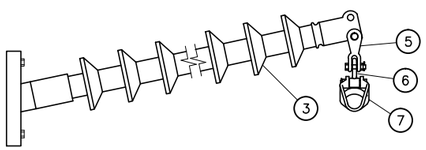

ASSEMBLY TYPE HS1–F
SINGLE CONDUCTOR
SUSPENSION
FLAT BASE

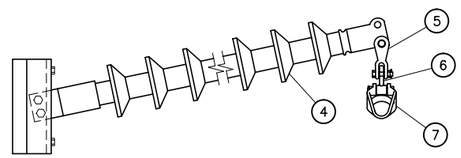

ASSEMBLY TYPE HS1–G
SINGLE CONDUCTOR
SUSPENSION
GAIN BASE

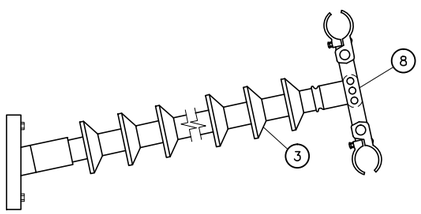

ASSEMBLY TYPE HF2–F
DOUBLE CONDUCTOR
FIXED
FLAT BASE

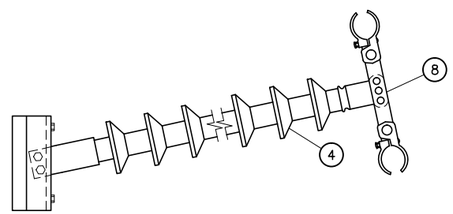

ASSEMBLY TYPE HF2–G
DOUBLE CONDUCTOR
FIXED
GAIN BASE

MATERIALS LIST

ITEM NO.	DESCRIPTION
1	HORIZONTAL POST INSULATOR, COMPOSITE CLAMP – TOP ADAPTER, FLAT BASE
2	HORIZONTAL POST INSULATOR, COMPOSITE CLAMP – TOP ADAPTER, GAIN BASE
3	HORIZONTAL POST INSULATOR, COMPOSITE, TWO–HOLE END FITTING, FLAT BASE
4	HORIZONTAL POST INSULATOR, COMPOSITE, TWO–HOLE END FITTING, GAIN BASE
5	Y–CLEVIS – CLEVIS, 90°, BNK
6	OVAL EYE – EYE
7	SUSPENSION CLAMP, BNK
8	VERTICAL JUMPER YOKE

NOTES

1. BNK INDICATES BOLT, NUT AND STAINLESS STEEL COTTER KEY REQUIRED.
2. SEE SPECIFICATIONS FOR INSULATOR AND HARDWARE ELECTRICAL AND MECHANICAL RATINGS.

INSULATOR ASSEMBLY TYPE NO.

EXAMPLE: HF1 – G

- TYPE OF STRUCTURE ATTACHMENT FLAT (F) OR GAIN (G) BASE
- ONE (1) OR TWO (2) SUBCONDUCTORS
- CONDUCTOR ATTACHMENT, FIXED (F) OR SUSPENSION (S)
- HORIZONTAL POST INSULATOR ASSEMBLY

HORIZONTAL POST INSULATOR ASSEMBLIES
(NOTE 2)

B	9–29–16 A7–RC	CHANGED POLYMER FIBERGLASS TO COMPOSITE.
A	7–15–03 A7–RC	REVISED TITLE BLOCK ONLY.

UNITED STATES DEPARTMENT OF ENERGY
WESTERN AREA POWER ADMINISTRATION
CORPORATE SERVICES OFFICE – LAKEWOOD, COLORADO

TRANSMISSION LINE STANDARDS
HORIZONTAL POST
INSULATOR ASSEMBLIES

DESIGNED F.S. COOK APPROVED ROSS CLARK
ELECTRICAL ENGINEERING MANAGER

CAE | OCTOBER 10, 1997 | 41 | 1024

Plotted By:Seela Sep 29, 2016– 1:30pm IMAGES:
S:\projects\Misc\StandardDrawings\DesignDrawings\DwgsReadyForFinal\Scripts\41_1024b.dwg Last Saved By: Seela, Holly (CONTR) on 9/29/2016 1:30 PM
XREF(S):

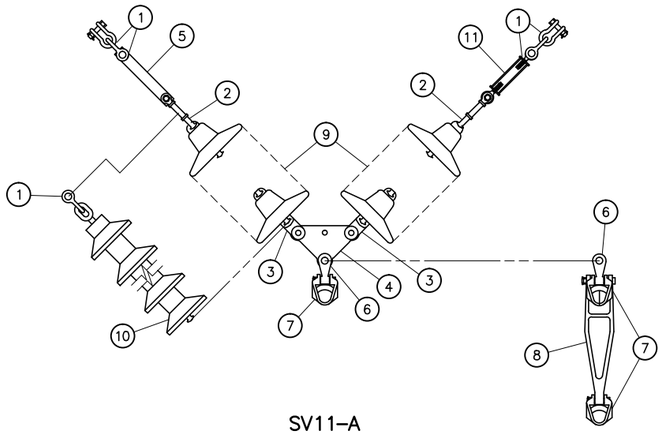

SV11–A

SV12–A

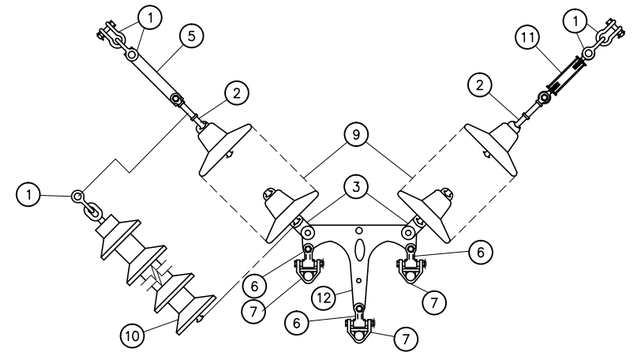

SV13–A

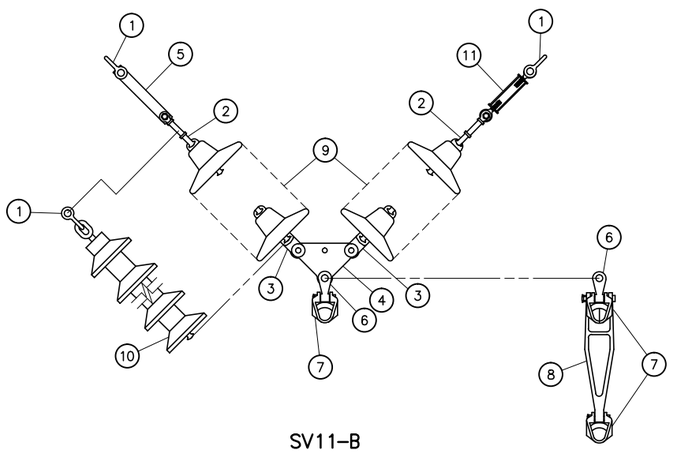

SV11–B

SV12–B

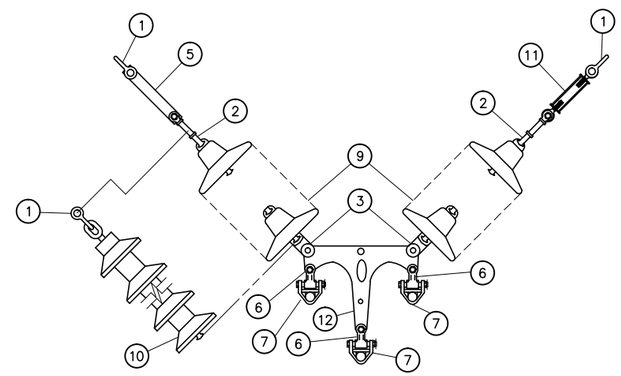

SV13–B

VEE STRING INSUILATOR ASSEMBLIES
ULTIMATE INSULATOR ASSEMBLY STRENGTH AS SPECIFIED
(NOTE 2)

VEE STRING INSULATOR ASSEMBLIES
ULTIMATE INSULATOR ASSEMBLY STRENGTH AS SPECIFIED
(NOTE 2)

MATERIALS LIST

ITEM NO.	DESCRIPTION
1	ANCHOR SHACKLE, BNK
2	HOT LINE Y–CLEVIS BALL, BNK
3	SOCKET Y–CLEVIS, BNK
4	YOKE PLATE
5	EXTENSION STRAP, EYE–EYE (LENGTH AS REQUIRED)
6	Y–CLEVIS EYE, 90°, BNK
7	SUSPENSION CLAMP, BNK
8	VERTICAL BUNDLE YOKE, 18'' SPACING
9	INSULATOR STRING, PORCELAIN OR GLASS UNITS
10	INSULATOR STRING, COMPOSITE, OVAL EYE–BALL (LENGTH AS SPECIFIED)
11	TURNBUCKLE, OVAL EYE – OVAL EYE, LENGTH AS REQUIRED
12	YOKE PLATE, TRIPLE BUNDLE, 18'' SPACING

NOTES

1. BNK INDICATES BOLT, NUT AND STAINLESS STEEL COTTER KEY REQUIRED.
2. STRENGTH OF HARDWARE COMPONENTS SHALL BE EQUAL TO OR GREATER THAN THE SPECIFIED INSULATOR ASSEMBLY ULTIMATE STRENGTH, EXCEPT THAT COMPONENTS DUPLICATED BELOW THE TRIANGULAR YOKE PLATE MAY HAVE 50% OF ASSEMBLY ULTIMATE STRENGTH FOR TYPE SV12 AND 33% OF ASSEMBLY ULTIMATE STRENGTH FOR THE TYPE SV13.

TABLE A – PORCELAIN OR GLASS UNITS

VOLTAGE (KV)	UNIT QUANTITY/ASSEMBLY TYPE		
	STEEL STRUCTURES		
	SV11	SV12	SV13
69	12	12	12
115	18	18	18
138	20	20	20
161	22	22	22
230	28	28	28
345	36	36	36
500	62	62	62

INSULATOR ASSEMBLY TYPE NO.

EXAMPLE: SV13 – A

- A: TYPE OF STRUCTURE ATTACHMENT HARDWARE
- 13: ONE (1), TWO (2), OR (3) THREE SUBCONDUCTORS
- 13: SINGLE (1) OR DOUBLE (2) INSULATOR STRING
- V: ''VEE'' STRING
- S: SUSPENSION ASSEMBLY

C	9–29–16 A7–RC	ADDED GLASS AND CHANGED POLYMER FIBERGLASS TO COMPOSITE.
B	9–14–06 A7–FSC	MODIFIED TITLE BLOCK, MATERIALS LIST, NOTES, TABLE A, AND ADDED TRIPLE BUNDLE ASSEMBLIES.
A	7–15–03 A7–RC	REVISED TITLE BLOCK ONLY.

UNITED STATES DEPARTMENT OF ENERGY
WESTERN AREA POWER ADMINISTRATION
CORPORATE SERVICES OFFICE – LAKEWOOD, COLORADO

TRANSMISSION LINE STANDARDS
SUSPENSION INSULATOR ASSEMBLIES
VEE STRING, SINGLE STRING

DESIGNED F.S. COOK APPROVED ROSS CLARK
ELECTRICAL ENGINEERING MANAGER

CAE	OCTOBER 10, 1997	41	1025

Plotted By: Seela Sep 29, 2016- 1:30pm IMAGES:
S:\projects\Misc\StandardDrawings\DesignDrawings\xDwgsReadyForFinal\Scripts\41_1025c.dwg Last Saved By: Seela, Holly (CONTR) on 9/29/2016 1:30 PM
XREF(S):

ITEM NO.	ITEM DESCRIPTION	PART NUMBER (OR EQUAL)	MANUFACTURER (OR EQUAL)	QUANTITIY
1	FIBER OPTIC SPLICE ENCLOSURE	SB01	ACA (AFL)	1
2	3-PIECE EXTERNAL COIL BRACKET	CB-44-3AL	ACA (AFL)	1
3	TOWER LEG, STEEL ANGLE			1
4	DOWNLEAD CLAMP	SEE NOTE 7		AS REQD
5	GROUND BONDING CLAMP		ACA (AFL)	1
6	5/8" MACHINE BOLT W/NUT & LOCKNUT			2

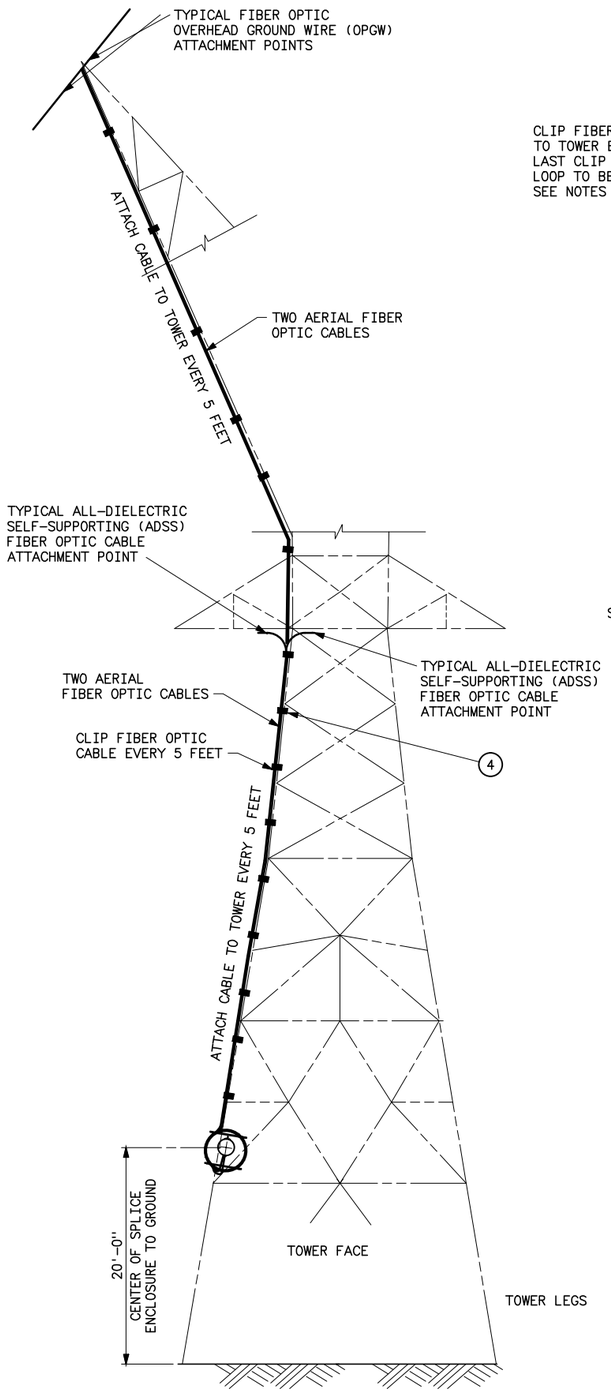

TYPICAL LATTICE STEEL TOWERS

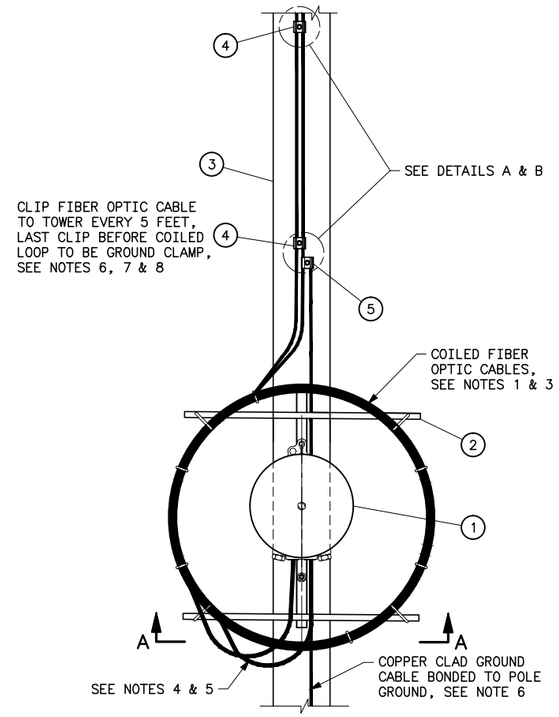

SPLICE ENCLOSURE AND CABLE STORAGE BRACKET

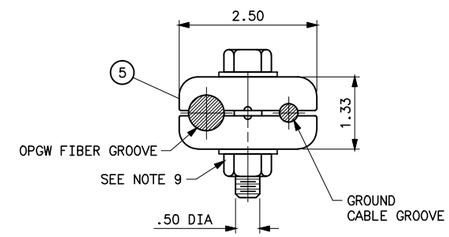

DETAIL A

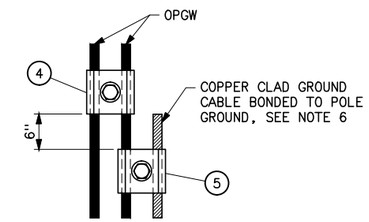

DETAIL B

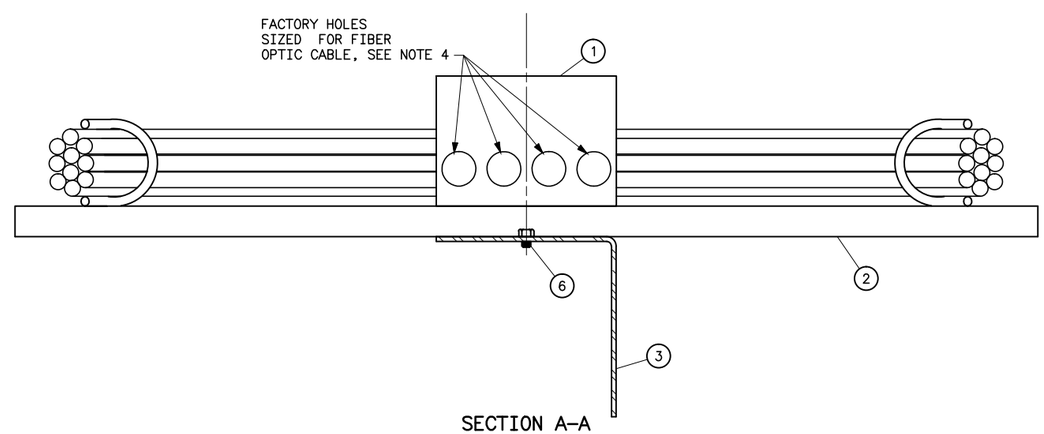

SECTION A-A
OPTICAL FIBER SPLICE ENCLOSURE
CABLE OPENING END PLATE

NOTES

1. REMOVE 25 FEET OF CABLE DAMAGED DURING STRINGING OPERATIONS. THE AMOUNT OF SPARE CABLE TO BE COILED IS 60 FEET OF EACH CABLE, OR AS DIRECTED BY THE COR DUE TO ACCESS FOR THE SPLICE VAN. LENGTHS ARE MINIMUM.
2. PERMANENTLY ATTACH EXTERNAL COIL BRACKET TO TOWER USING 5/8" HARDWARE. SPRAY GALVANOX IN NEW HOLE TO PREVENT RUST.
3. FIBER CABLE COIL TO BE SECURED USING PANDUIT, STAINLESS STEEL, MLT-H SERIES CABLE TIES, OR EQUIVALENT. COIL TO BE SECURED WHERE CABLE ENTERS AND EXITS COIL.
4. FIBER OPTIC CABLE SHALL ENTER THE BOTTOM OF THE SPLICE ENCLOSURE WITH DRIP LOOPS AT THE BOTTOM ENTRANCE. UNUSED ENTRANCE HOLES SHALL BE SEALED WATERTIGHT.
5. DRIP LOOP MINIMUM BEND RADIUS SHALL NOT EXCEED MANUFACTURER'S SPECIFICATION.
6. THE OPGW SHALL BE SECURELY BONDED TO THE GROUND CLAMP AND THE GROUND CLAMP SECURELY BONDED TO THE STEEL STRUCTURE.
7. SEE DRAWING 41 1030 FOR FIBER OPTIC CABLE DOWNLEAD CLAMP AND BONDING CLAMP.
8. USE TWO BONDING CLAMPS AND RUN GROUND CABLE FROM BONDING CLAMP TO STRUCTURE GROUND AS SHOWN IN DETAIL B. IF BONDING CLAMP IS NOT SECURED TO THE STRUCTURE THEN A DOWNLEAD CLAMP SHALL BE PLACED WITHIN 1 FOOT ABOVE BONDING CLAMP.
9. DRILL HOLE AND SECURE GROUND BONDING CLAMP TO STRUCTURE USING NUT AND LOCK WASHER. SPRAY GALVANOX IN NEW HOLE TO PREVENT RUST.

E	9-29-16 A7-JAM	GENERAL REVISIONS TO DRAWING, MATERIAL AND NOTES.
D	1-14-11 A7-JSR	REVISED NOTE 3.
C	5-15-09 A7-MK	REMOVED NOTE 10.
B	3-17-09 A7-RC	ADDED STEEL CHANNEL STRUT OPTION.
A	7-15-03 A7-RC	REVISED TITLE BLOCK ONLY.

UNITED STATES DEPARTMENT OF ENERGY
WESTERN AREA POWER ADMINISTRATION
CORPORATE SERVICES OFFICE - LAKEWOOD, COLORADO

TRANSMISSION LINE STANDARDS
LATTICE STEEL STRUCTURES
FIBER OPTIC CABLE MOUNTING

DESIGNED STEVE ROCK APPROVED ROSS CLARK
ELECTRICAL ENGINEERING MANAGER

CAE	AUGUST 1, 2000	41	1027

Plotted By:Seela Sep 29, 2016- 1:31pm IMAGES:
S:\projects\Misc\StandardDrawings\Drawings\DesignDrawings\xDwgsReadyForFinal\Scripts\41_1027e.dwg Last Saved By: Seela, Holly (CONTR) on 9/29/2016 1:31 PM
XREF(S):

ITEM NO.	ITEM DESCRIPTION	PART NUMBER (OR EQUAL)	MANUFACTURER (OR EQUAL)	QUANTITIY
1	FIBER OPTIC SPLICE ENCLOSURE	SB01	ACA (AFL)	1
2	3-PIECE EXTERNAL COIL BRACKET	CB-44-3AL	ACA (AFL)	1
3	CONCRETE OR STEEL POLE STRUCTURE			
4	STRUCTURE DOWNLEAD CLAMP	SEE NOTE 7	ACA (AFL)	AS REQD
5	GROUND BONDING CLAMP		ACA (AFL)	1
6	5/8" MACHINE BOLT W/NUT, SQUARE WASHER & LOCKNUT			2

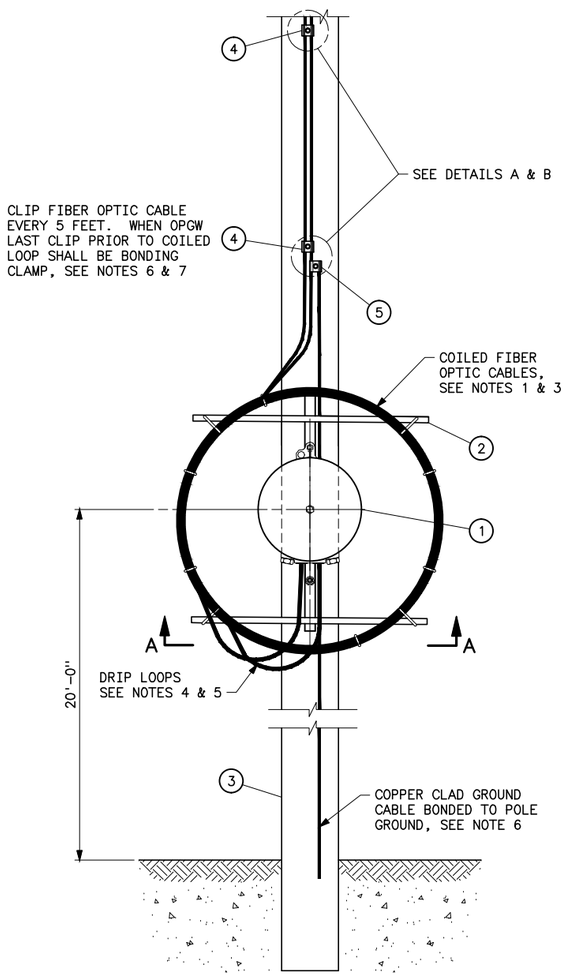

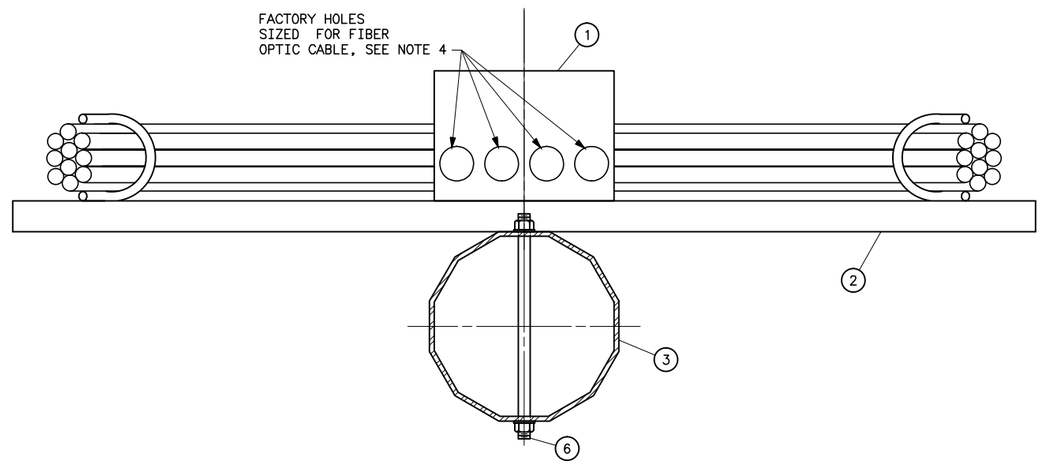

SECTION A-A
OPTICAL FIBER SPLICE ENCLOSURE
CABLE OPENING END PLATE

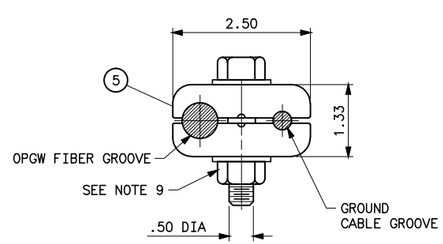

DETAIL A

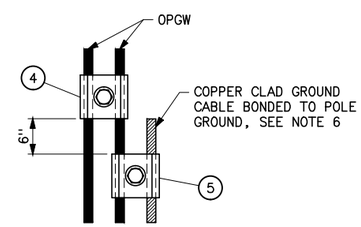

DETAIL B

NOTES

1. REMOVE 25 FEET OF CABLE DAMAGED DURING STRINGING OPERATIONS. THE AMOUNT OF SPARE CABLE TO BE COILED IS 60 FEET OF EACH CABLE, OR AS DIRECTED BY THE COR DUE TO ACCESS FOR THE SPLICE VAN. LENGTHS ARE MINIMUM.
2. PERMANENTLY ATTACH EXTERNAL COIL BRACKET TO STRUCTURE USING 5/8" HARDWARE. ON STEEL POLES, SPRAY GALVANOX IN NEW HOLE TO PREVENT RUST. FOR CONCRETE POLES USE CARE TO NOT CUT STEEL STRANDING MEMBERS WHEN DRILLING POLE.
3. FIBER CABLE COIL TO BE SECURED USING PANDUIT, STAINLESS STEEL, MLT-H SERIES CABLE TIES, OR EQUIVALENT. COIL TO BE SECURED WHERE CABLE ENTERS AND EXITS COIL.
4. FIBER OPTIC CABLE SHALL ENTER THE BOTTOM OF THE SPLICE ENCLOSURE WITH DRIP LOOPS AT THE BOTTOM ENTRANCE. UNUSED ENTRANCE HOLES SHALL BE SEALED WATERTIGHT.
5. DRIP LOOP MINIMUM BEND RADIUS SHALL NOT EXCEED MANUFACTURER'S SPECIFICATION.
6. THE OPGW SHALL BE SECURELY BONDED TO THE GROUND CLAMP AND THE GROUND CLAMP SECURELY BONDED TO THE STRUCTURE GROUND.
7. SEE DRAWING 41 1030 FOR FIBER OPTIC CABLE DOWNLEAD CLAMP AND BONDING CLAMP. BANDING CLAMP CAN BE USED IN PLACE OF STANDARD CLAMP UPON APPROVAL BY THE COR.
8. FOR CONCRETE POLES USE BANDING CLAMPS TO SECURE FIBER OPTIC CABLE TO THE POLE. SEE DRAWING 41 1030.
9. ON TUBULAR STEEL STRUCTRES, DRILL AND TAP HOLE FOR SECURING GROUND BONDING CLAMP TO STRUCTURE. SPRAY GALVANOX IN NEW HOLE TO PREVENT RUST. ON CONCRETE STRUCTURES USE BANDING CLAMP TO SECURE GROUND BONDING CLAMP TO STRUCTURE.

E	9-29-16 A7-JAM	GENERAL REVISIONS TO DRAWING, MATERIAL AND NOTES.
D	1-14-11 A7-JSR	REVISED MATERIAL LIST
C	5-15-09 A7-MK	REVISED BONDING CLAMP & MATERIAL LIST
B	6-8-06 A7-RC	REVISED SPARE COIL QUANTITY, LOOP, AND ATTACHMENT TO STEEL POLE.

UNITED STATES DEPARTMENT OF ENERGY
WESTERN AREA POWER ADMINISTRATION
CORPORATE SERVICES OFFICE - LAKEWOOD, COLORADO

TRANSMISSION LINE STANDARDS
STEEL AND CONCRETE
POLE STRUCTURES
FIBER OPTIC CABLE MOUNTING

DESIGNED STEVE ROCK APPROVED ROSS CLARK
ELECTRICAL ENGINEERING MANAGER

CAE	AUGUST 1, 2000	41	1028

Plotted By: Seela Sep 29, 2016- 1:31pm IMAGES:
S:\projects\Misc\StandardDrawings\Drawings\DesignDrawings\xDwgsReadyForFinal\Scripts\41_1028e.dwg Last Saved By: Seela, Holly (CONTR) on 9/29/2016 1:31 PM
XREF(S):

ITEM NO.	ITEM DESCRIPTION	PART NUMBER (OR EQUAL)	MANUFACTURER (OR EQUAL)	QUANTITIY
1	FIBER OPTIC SPLICE ENCLOSURE	SB01	ACA (AFL)	1
2	3-PIECE EXTERNAL COIL BRACKET	CB-44-3AL	ACA (AFL)	1
3	WOOD POLE STRUCTURE			1
4	DOWNLEAD CLAMP	SEE NOTE 7		AS REQD
5	GROUND BONDING CLAMP		ACA (AFL)	1
6	5/8'' MACHINE BOLT W/NUT, SQUARE WASHER & LOCKNUT			2

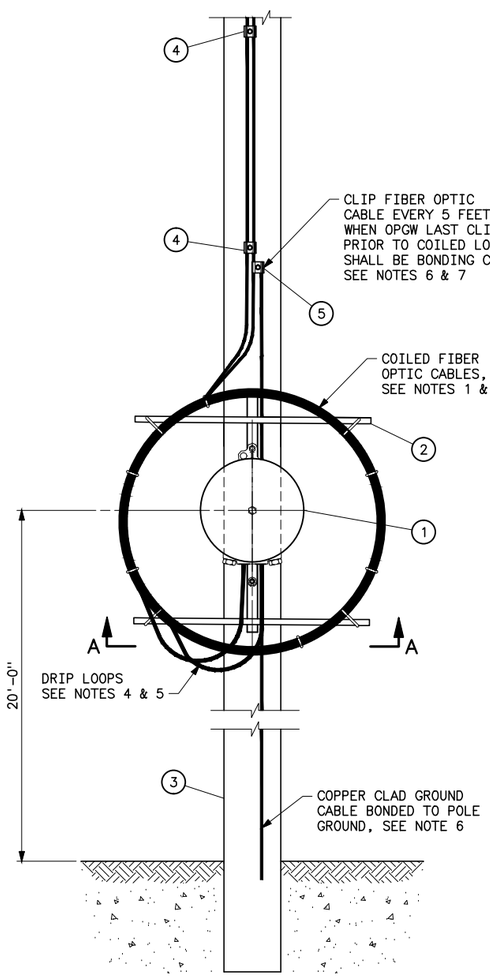

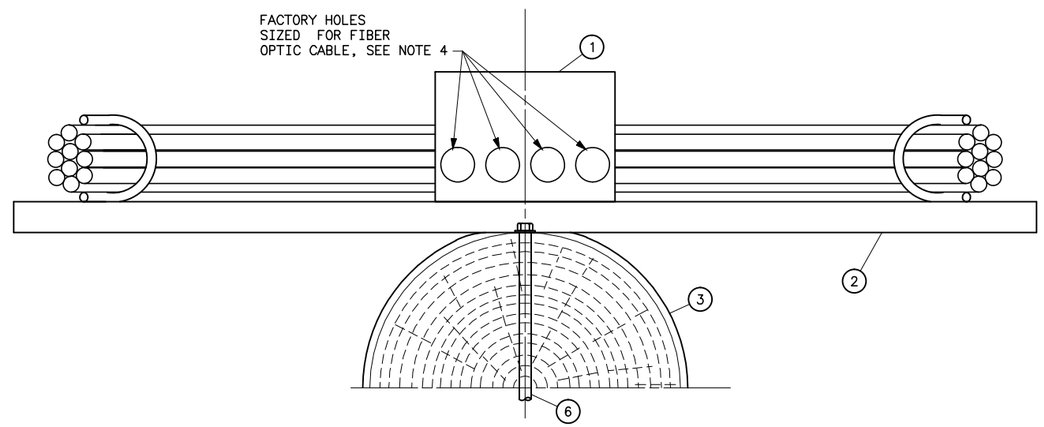

SECTION A-A
OPTICAL FIBER SPLICE ENCLOSURE
CABLE OPENING END PLATE

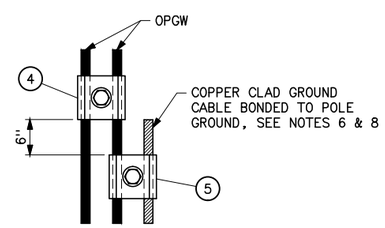

DETAIL A

NOTES

1. REMOVE 25 FEET OF CABLE DAMAGED DURING STRINGING OPERATIONS. THE AMOUNT OF SPARE CABLE TO BE COILED IS 60 FEET OF EACH CABLE, OR AS DIRECTED BY THE COR DUE TO ACCESS FOR THE SPLICE VAN.
2. PERMANENTLY ATTACH EXTERNAL COIL BRACKET TO STRUCTURE USING 5/8'' HARDWARE.
3. FIBER CABLE COIL TO BE SECURED USING PANDUIT, STAINLESS STEEL, MLT-H SERIES CABLE TIES, OR EQUIVALENT. COIL TO BE SECURED WHERE CABLE ENTERS AND EXITS COIL.
4. FIBER OPTIC CABLE SHALL ENTER THE BOTTOM OF THE SPLICE ENCLOSURE WITH DRIP LOOPS AT THE BOTTOM ENTRANCE. UNUSED ENTRANCE HOLES SHALL BE SEALED WATERTIGHT.
5. DRIP LOOP MINIMUM BEND RADIUS SHALL NOT EXCEED MANUFACTURER'S SPECIFICATION.
6. THE OPGW SHALL BE SECURELY BONDED TO THE GROUND CLAMP AND THE GROUND CLAMP SECURELY BONDED TO THE STRUCTURE GROUND.
7. SEE DRAWING 41 1030 FOR FIBER OPTIC CABLE DOWNLEAD CLAMP AND BONDING CLAMP.
8. USE LAG SCREW TO SECURE GROUND BONDING CLAMP TO STRUCTURE.

G	9-29-16 A7-JAM	GENERAL REVISIONS TO DRAWING, MATERIAL AND NOTES.
F	1-14-11 A7-JSR	REVISED NOTE 1 AND NOTE 7. REVISED TABLE NUMBERS AND ITEMS
E	5-15-09 A7-MK	REVISED BONDING CLAMP & MATERIAL LIST.
D	6-8-06 A7 - RC	REVISED SPARE COIL QUANTITY, LOOP, AND ATTACHMENT TO WOOD POLE.

UNITED STATES DEPARTMENT OF ENERGY
WESTERN AREA POWER ADMINISTRATION
CORPORATE SERVICES OFFICE - LAKEWOOD, COLORADO

TRANSMISSION LINE STANDARDS
WOOD POLE STRUCTURES
FIBER OPTIC CABLE MOUNTING

DESIGNED STEVE ROCK APPROVED ROSS CLARK
ELECTRICAL ENGINEERING MANAGER

CAE	AUGUST 1, 2000	41	1029

Plotted By:Seela Sep 29, 2016- 1:32pm IMAGES:
S:\projects\Misc\StandardDrawings\DesignDrawings\xDwgsReadyForFinal\Scripts\41_1029g.dwg Last Saved By: Seela, Holly (CONTR) on 9/29/2016 1:32 PM
XREF(S):

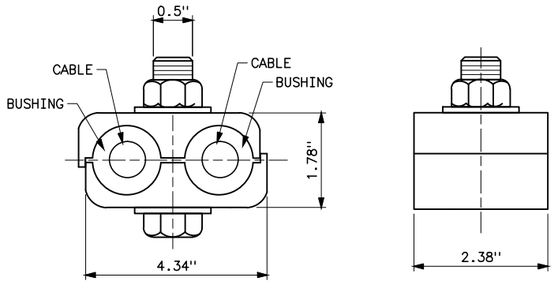

STANDARD CLAMP

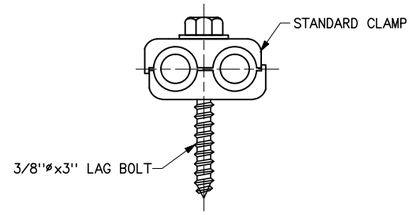

STANDARD CLAMP WITH LAG BOLT

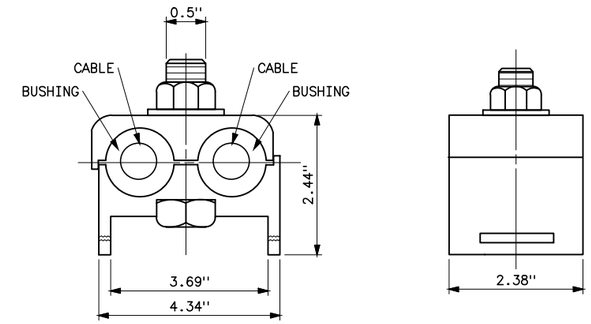

BANDING CLAMP

SECURE BANDING CLAMP TO
STRUCTURE USING 1/2" STAINLESS STEEL BANDING

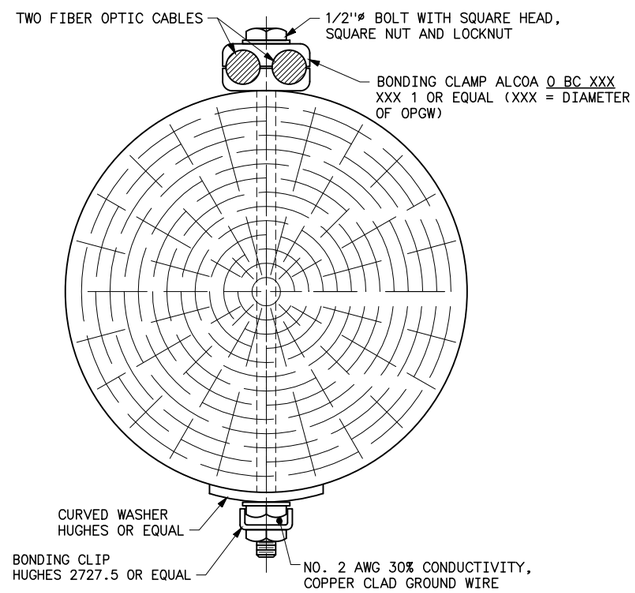

STANDARD CLAMP WITH THRU BOLT

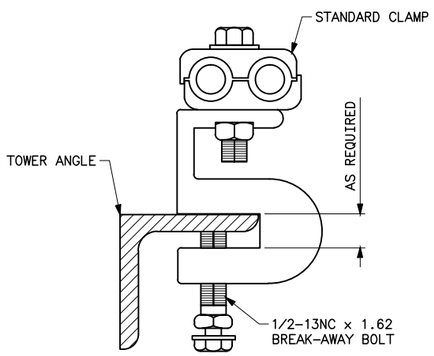

STANDARD CLAMP WITH ANGLE ATTACHMENT

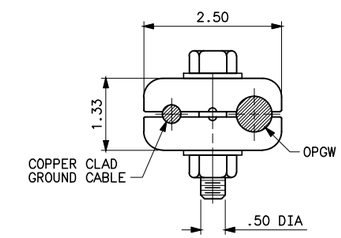

BONDING CLAMP FOR GROUNDING

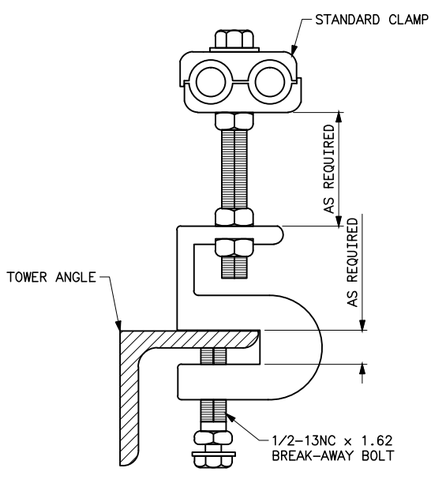

STANDARD CLAMP WITH ANGLE ATTACHMENT
AND STANDOFF BOLT

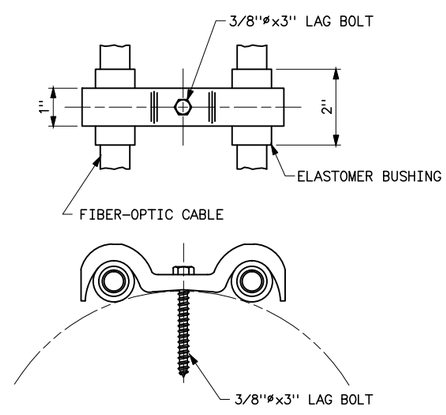

DOWNLEAD CLAMP FOR WOOD POLE STRUCTURE

E	9-29-16 A7-JAM	GENERAL REVISIONS. REMOVED STAINLESS STEEL BAND FOR SECURING SPLICE ENCLOSURE.
D	4-7-11 A7-RC	ADDED STANDOFF BOLT OPTION.
C	5-15-09 A7-MK	REVISED BAND NOTE AND ADDED BONDING CLAMP.
B	01-31-05 A7-KKR	ADDED BONDING CLAMP FOR WOOD POLE STRUCTURE DETAIL.
A	07-15-03 A7-RC	REVISED TITLE BLOCK.

UNITED STATES DEPARTMENT OF ENERGY
WESTERN AREA POWER ADMINISTRATION
CORPORATE SERVICES OFFICE – LAKEWOOD, COLORADO

TRANSMISSION LINE STANDARDS
FIBER OPTIC CABLE MOUNTING
DOWNLEAD CLAMPS AND BANDS

DESIGNED STEVE ROCK APPROVED ROSS CLARK
ELECTRICAL ENGINEERING MANAGER

DATE		
AUGUST 01, 2000	41	1030

Plotted By:Seela Sep 29, 2016- 1:32pm IMAGES:
S:\projects\Misc\StandardDrawings\DesignDrawings\xDwgsReadyForFinal\Scripts\41_1030e.dwg Last Saved By: Seela, Holly (CONTR) on 9/29/2016 1:32 PM
XREF(S):

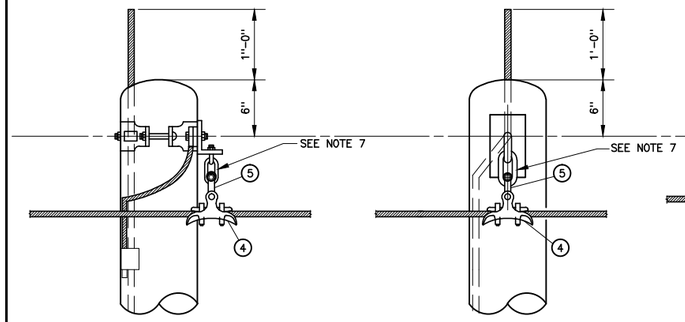

SUSPENSION ASSEMBLY OPGW-SA
FOR ATTACHMENT TO STEEL ANGLE OR SUPPORT BRACKET

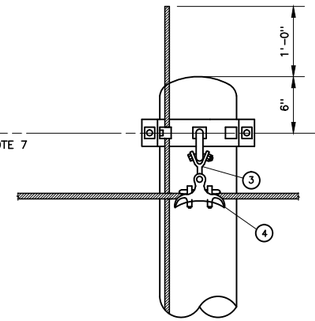

SUSPENSION ASSEMBLY OPGW-PB
FOR ATTACHMENT TO POLE BAND

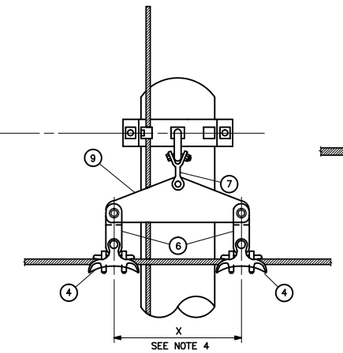

SUSPENSION ASSEMBLY OPGW-PBY
FOR ATTACHMENT HOLE IN-LINE WITH OPGW

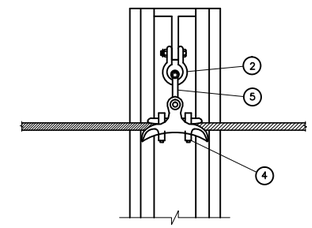

SUSPENSION ASSEMBLY OPGW-SL
FOR ATTACHMENT HOLE IN-LINE WITH OPGW

MATERIALS LIST

ITEM NO.	OPGW ASSEMBLY QUANTITY												DESCRIPTION
	SA	PB	PBY	SL	SP	SYL	TW	TV	TH	TLV	FDA	FDB	
1	SEE NOTE 9												GUIDE CLAMP
2				1	1	2	1	1	1	2	5*	4*	ANCHOR SHACKLE, BNK
3		1			1		1		1		1*	2*	Y-CLEVIS EYE 90°, BNK(SEE NOTE 13)
4	1	1	2	1	1	2							SUSPENSION CLAMP, BNK(SEE NOTE 13)
5	1			1				1					Y-CLEVIS EYE, BNK(SEE NOTE 13)
6			2			2							CLEVIS EYE, BNK
7			1										Y-CLEVIS CLEVIS 90°, BNK
8							1	1	1	1	1	2	OPGW DEADEND, BNK
9			1			1					1	1	YOKE PLATE
10							1			1	2*	2*	CONNECTING LINK
11											1		COMPRESSION FITTING, EYE TYPE
12											2*	2*	OVAL EYE-OVAL EYE TURNBUCKLE (16")

* QUANTITY DEPENDS UPON HARDWARE OPTION THAT WILL BE USED.

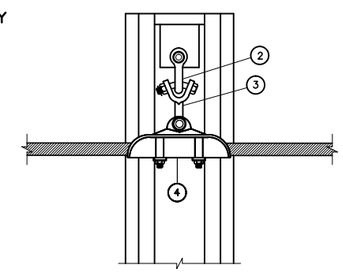

SUSPENSION ASSEMBLY OPGW-SP
FOR ATTACHMENT HOLE PERPENDICULAR TO OPGW

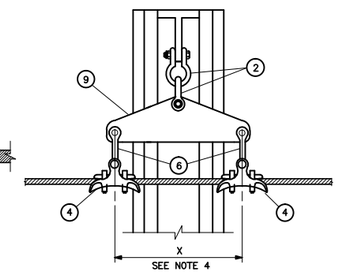

SUSPENSION ASSEMBLY OPGW-SYL
FOR ATTACHMENT HOLE IN-LINE WITH OPGW

NOTES

1. BNK INDICATE BOLT, NUT AND STAINLESS STEEL COTTER KEY REQUIRED.
2. SEE SPECIFICATIONS FOR STRENGTH RATING OF COUPLING HARDWARE.
3. ASSEMBLIES OPGW-PBY AND OPGW-SYL SHALL BE USED FOR LINE ANGLES OF 30° TO 60°.
4. LENGTH OF SUSPENSION CLAMP PLUS 3 INCHES MINIMUM.
5. OPGW REFERS TO THE OPTICAL GROUND WIRE.
6. GROUNDING OF THE OPGW ATTACHMENT ASSEMBLIES SHALL BE IN ACCORDANCE WITH THE MANUFACTURER'S RECOMMENDATIONS.
7. CHAIN LINK FURNISHED AS PART OF THE STRUCTURE FOR NEW CONSTRUCTION.
8. THE SHACKLE TO Y-CLEVIS CONNECTION IS REQUIRED TO PROVIDE 360° MOVEMENT.
9. PREVENT THE OPGW FROM CLASHING WITH ALL POLES AND TOWERS BY PROVIDING SUFFICIENT NUMBER OF GUIDE CLAMPS TO ATTACH THE LOOP TO THE STRUCTURE OR BY LOOPING THE CABLE OVER THE TOP OR AROUND THE SIDES OF POLES.
10. ANY PROPOSED CHANGE OF HARDWARE SHALL REQUIRE THE CONTRACTOR TO RECEIVE APPROVAL FROM ENGINEERING PRIOR TO THE CHANGE.
11. HARDWARE SHALL HAVE MINIMUM RATED STRENGTH OF 17,000 LBS.
12. ADD 9-INCH CONNECTING LINK FOR USE WITH DEAD-END TEES.
13. SIZE WIDTH OF EYE ON Y-CLEVIS TO FIT BETWEEN EARS OF SUSPENSION CLAMP.
14. USE OPGW-TV FOR GLUED LAMINATED WOOD TENSION STRUCTURES WITH LINE ANGLES GREATER THAN 1°.

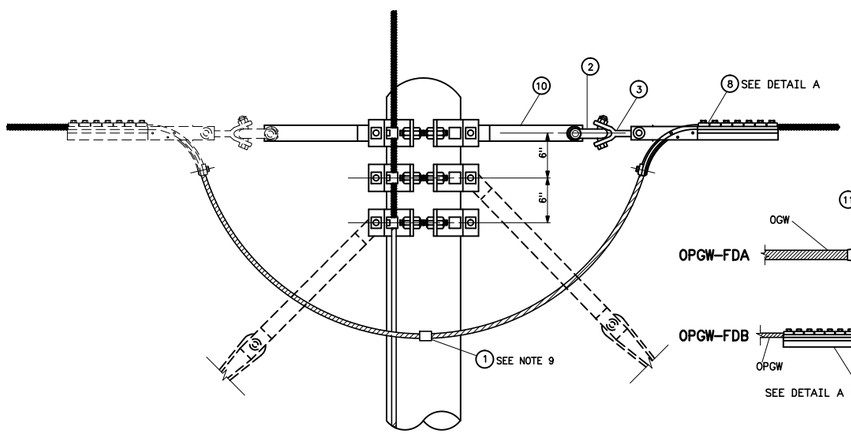

TENSION ASSEMBLY OPGW-TW
FOR ATTACHMENT TO EXTENSION LINK, EACH WAY

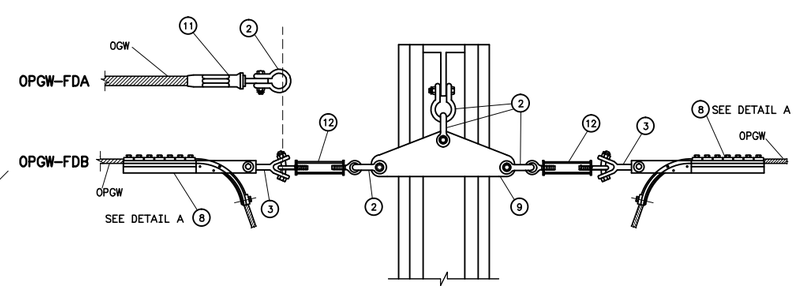

FLOATING DEADEND ASSEMBLIES
FOR ATTACHMENT HOLE IN-LINE WITH OPGW AND OGW

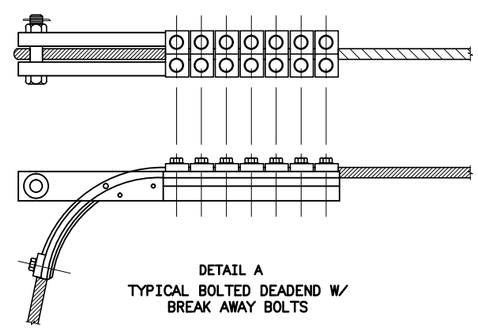

DETAIL A
TYPICAL BOLTED DEADEND W/ BREAK AWAY BOLTS

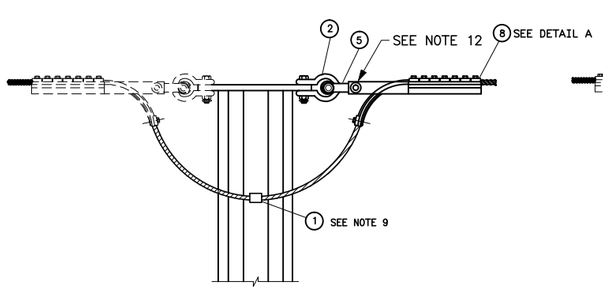

TENSION ASSEMBLY OPGW-TV
FOR VERTICAL ATTACHMENT HOLE (SEE NOTE 14)

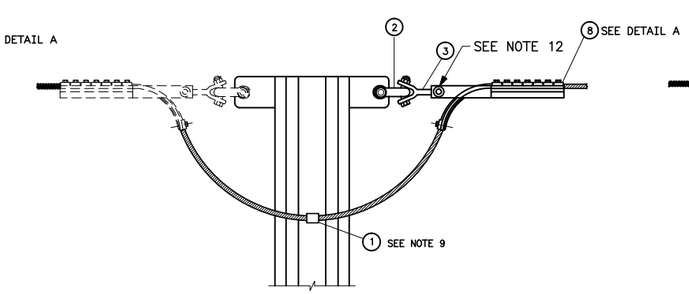

TENSION ASSEMBLY OPGW-TH
FOR HORIZONTAL ATTACHMENT HOLE

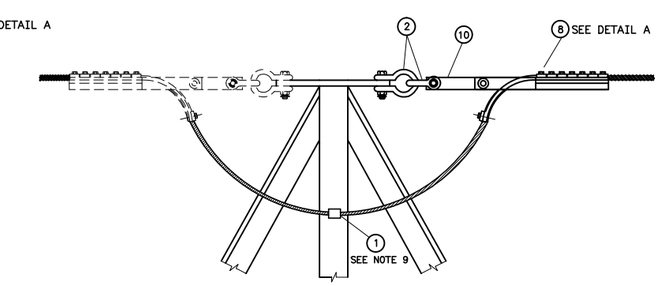

TENSION ASSEMBLY OPGW-TLV
FOR VERTICAL ATTACHMENT HOLE ON LATTICE TYPE TOWERS

F	4-19-11 A7-KKR	ADDED SUPPORT BRACKET ASSEMBLY. ADDED NOTES 12, 13 AND 14.
E	9-20-10 A7-RC	ADDED BNK TO ITEM 8.
D	5-15-09 A7-MK	REVISED FLOATING DEADEND AND NOTE 9.
C	7-2-04 A7-FSC	REVISED TURNBUCKLE FITTINGS, NOTE 7 AND ADDED OPGW-SP
B	7-15-03 A7-RC	REVISED TITLE BLOCK ONLY.
A	7-1-02 A79-JGW	MINOR REVISIONS.

UNITED STATES DEPARTMENT OF ENERGY
WESTERN AREA POWER ADMINISTRATION
CORPORATE SERVICES OFFICE - LAKEWOOD, COLORADO

TRANSMISSION LINE STANDARDS

OPTICAL GROUND WIRE ASSEMBLIES

DESIGNED JEFF WILD APPROVED ROSS CLARK
ELECTRICAL ENGINEERING MANAGER

A-F	MARCH 1, 2000	41	1031

Plotted By: lampman Jul 14, 2011- 2:14pm
IWARS
S:\Projects\Misc\Standards\Drawings\DesignDrawings\DwgsReadyForFinal\Scripts\41_1031f.dwg Last Saved By: Eva Lampman on 4/19/2011 9:30 AM

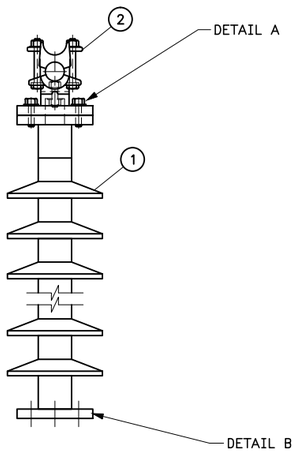

TYPE SP-1
OVERHUNG

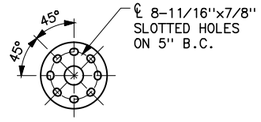

DETAIL A
BUS SUPPORT FITTING
END DETAILS

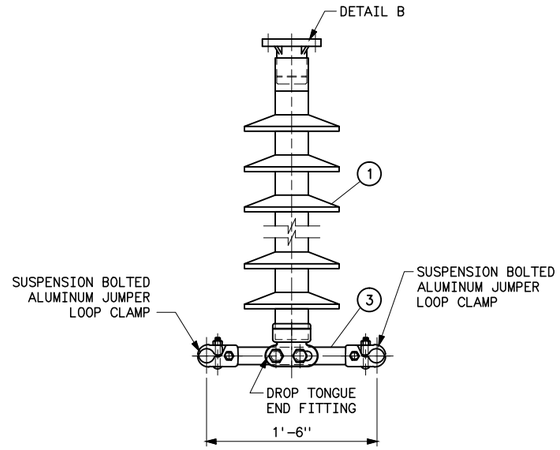

TYPE SP-3
DOUBLE CONDUCTOR,
SINGLE POST INSULATOR

MATERIAL LIST	
ITEM NO.	DESCRIPTION
1	STATION POST INSULATOR, COMPOSITE, FLANGE END FITTING (BOTH ENDS)
2	HORIZONTAL BUS SUPPORT FITTING (ANDERSON ACS OR EQUAL)
3	YOKE/CLAMP ASSEMBLY

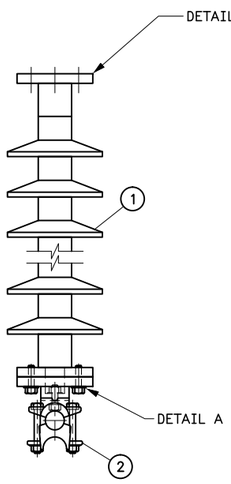

TYPE SP-2
UNDERHUNG

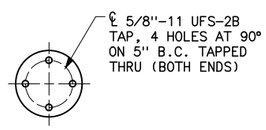

DETAIL B
INSULATOR FLANGE
DRILLING DETAILS

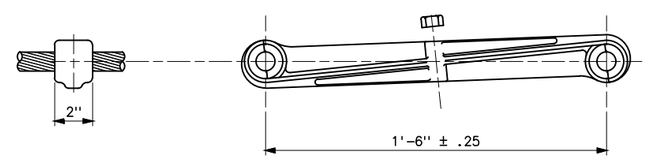

SPACER
TWO BUNDLE CONDUCTOR

NOTE

1. SEE SPECIFICATION FOR INSULATOR ELECTRICAL AND MECHANICAL RATINGS.
2. WHERE TWO CONDUCTOR SPACERS ARE REQUIRED, THEY SHALL BE INSTALLED HALF-WAY BETWEEN THE JUMPER PADS AND THE JUMPER INSULATOR ASSEMBLY.

C	9-29-16 A7-RC	DELETED REFERENCE TO POLYMER FIBERGLASS.
B	6-9-09 A7-MK	ADDED NEW ASSEMBLY AND SPACER.
A	7-15-03 A7-RC	REVISED TITLE BLOCK ONLY.

UNITED STATES DEPARTMENT OF ENERGY
WESTERN AREA POWER ADMINISTRATION
CORPORATE SERVICES OFFICE - LAKEWOOD, COLORADO

TRANSMISSION LINE STANDARDS
STATION POST
JUMPER INSULATOR ASSEMBLIES

DESIGNED F.S. COOK APPROVED R.M. CLARK
ELECTRICAL ENGINEERING MANAGER

CAE	APRIL 15, 2003	41	1033

Plotted By:Seela Sep 29, 2016- 1:33pm IMAGES:
S:\projects\Misc\StandardDrawings\Drawings\DesignDrawings\xDwgsReadyForFinal\Scripts\41_1033c.dwg Last Saved By: Seela, Holly (CONTR) on 9/29/2016 1:33 PM
XREF(S):

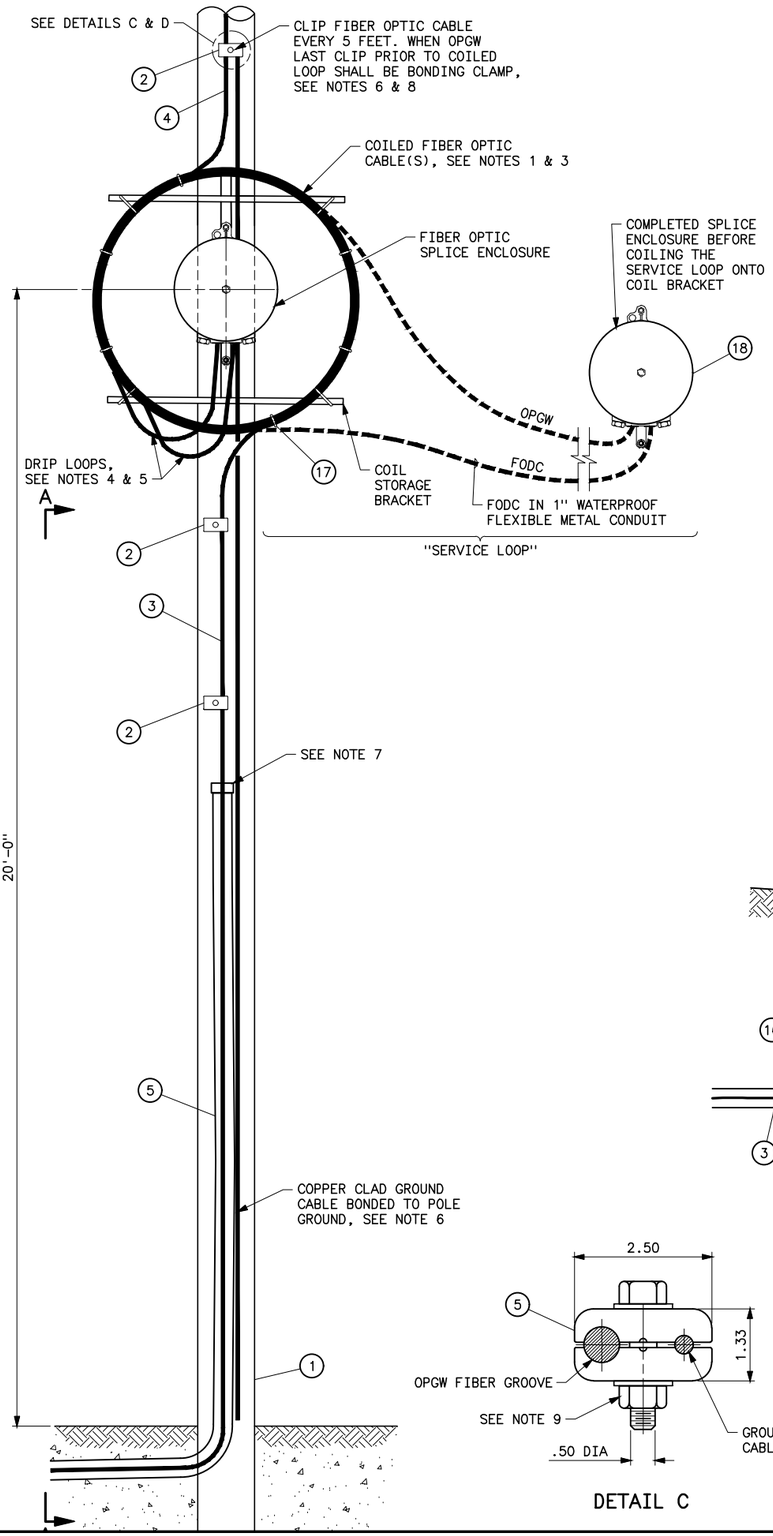

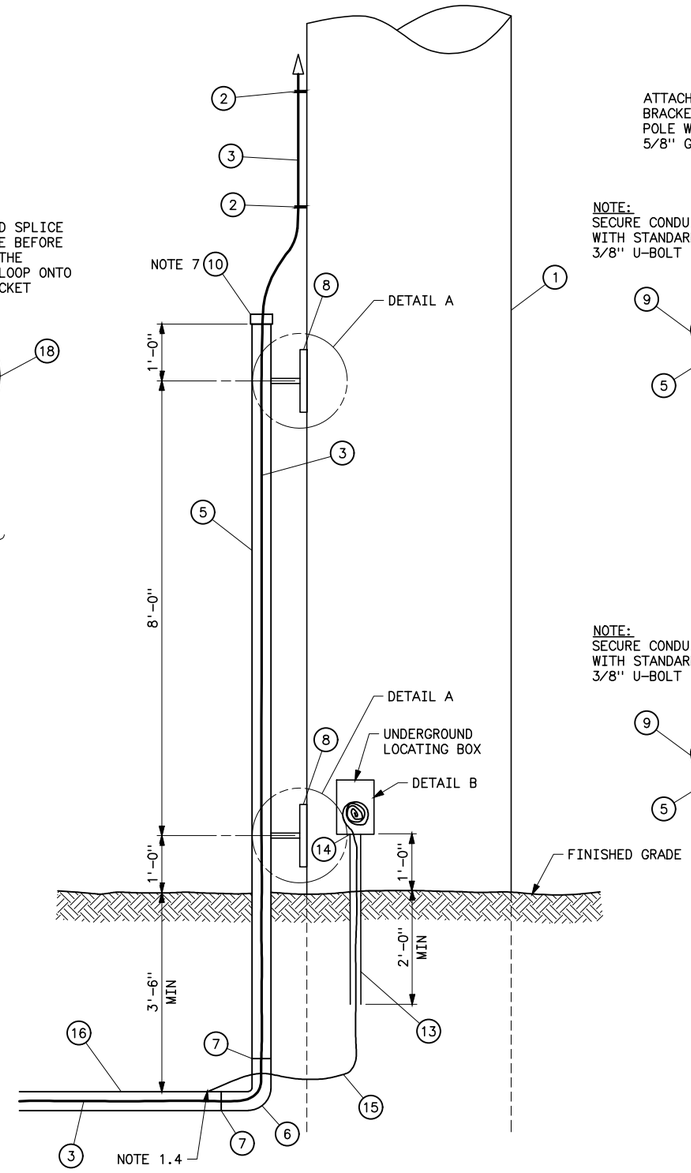

SECTION A-A

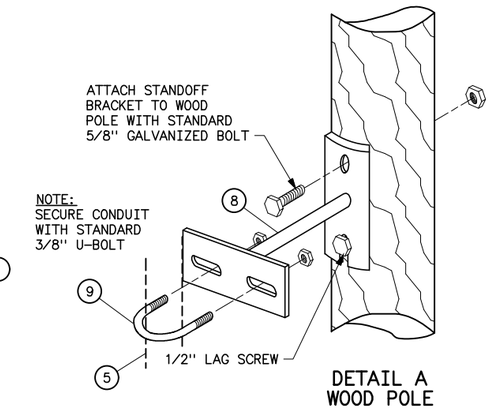

DETAIL A
WOOD POLE

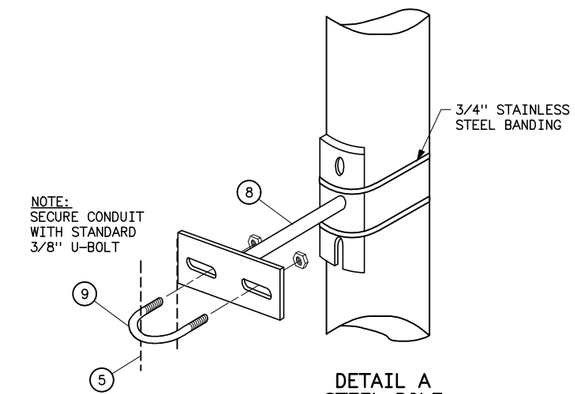

DETAIL A
STEEL POLE

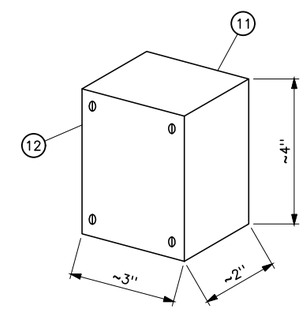

DETAIL B

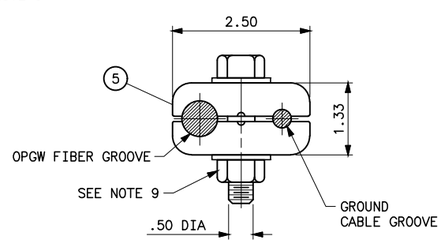

DETAIL C

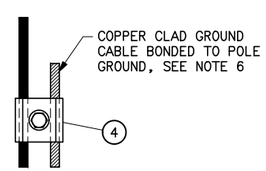

DETAIL D

MATERIAL LIST

ITEM NO.	ITEM DESCRIPTION	QAUNTITY	
1	WOOD, STEEL OR CONCRETE POLE STRUCTURE		
2	STRUCTURE DOWNLEAD CLAMP (5'-0" SPACING)	AS REQD	
3	FODC IN WATERPROOF METALLIC CONDUIT		
4	AERIAL FIBER CABLE		
5	RIGID CONDUIT RISER, 10'-0"	1	EA
6	90° SWEEP-RIGID	1	EA
7	TRANSITION COUPLER	2	EA
8	6" STANDOFF BRACKET	2	EA
9	3/8" U-BOLT w/ 2 LOCKWASHERS & 2 NUTS	2	EA
10	WATER TIGHT ADAPTER AND REDUCER	AS REQD	
11	WEATHERPROOF PVC ELECTRICAL UTILITY BOX	1	EA
12	WEATHERPROOF PVC BLANK ELECTRICAL BOXCOVER	1	EA
13	1/2" PVC CONDUIT	3	LF
14	1/2" - PVC CONNECTOR	1	EA
15	14ga THHN WIRE		LF
16	TONEABLE HDPE CONDUIT		
17	PANDUIT STAINLESS STEEL TIES	6	EA
18	FIBER OPTIC SPLICE ENCLOSURE (AFL-SB01)	1	EA

NOTES

1. REMOVE 25 FEET OF CABLE DAMAGED DURING STRINGING OPERATIONS. THE AMOUNT OF SPARE CABLE TO BE COILED IS 60 FEET OF EACH CABLE, OR AS DIRECTED BY THE COR DUE TO ACCESS FOR THE SPLICE VAN. LENGTHS ARE MINIMUM.
2. PERMANENTLY ATTACH EXTERNAL COIL BRACKET TO STRUCTURE USING 5/8" HARDWARE. ON STEEL POLES, SPRAY GALVANOX IN NEW HOLE TO PREVENT RUST. FOR CONCRETE POLES USE CARE TO NOT CUT STEEL STRANDING MEMBERS WHEN DRILLING POLE.
3. FIBER CABLE COIL TO BE SECURED USING PANDUIT, STAINLESS STEEL, MLT-H SERIES CABLE TIES, OR EQUIVALENT. COIL TO BE SECURED WHERE CABLE ENTERS AND EXITS COIL.
4. FIBER OPTIC CABLE SHALL ENTER THE BOTTOM OF THE SPLICE ENCLOSURE WITH DRIP LOOPS AT THE BOTTOM ENTRANCE. UNUSED ENTRANCE HOLES SHALL BE SEALED WATERTIGHT.
5. DRIP LOOP MINIMUM BEND RADIUS SHALL NOT EXCEED MANUFACTURER'S SPECIFICATION.
6. THE OPGW SHALL BE SECURELY BONDED TO THE GROUND CLAMP AND THE GROUND CLAMP SECURELY BONDED TO THE STRUCTURE GROUND.
7. WATERPROOF ADAPTOR AND REDUCER CONNECTOR ARE REQUIRED TO CONNECT THE 2 INCH RIGID CONDUIT TO THE 1 INCH FLEXIBLE WATERPROOF METALLIC CONDUIT.
8. SEE DRAWING 41 1030 FOR FIBER OPTIC CABLE DOWNLEAD CLAMP AND BONDING CLAMP. BANDING CLAMP CAN BE USED IN PLACE OF STANDARD CLAMP UPON APPROVAL BY THE COR.
9. ON WOOD POLES, USE LAG SCREW TO SECURE GROUND BONDING CLAMP TO STRUCTURE. ON TUBULAR STRUCTURES, DRILL AND TAP HOLE FOR SECURING GROUND BONDING CLAMP TO STRUCTURE. ON LATTICE STRUCTURES, DRILL HOLE AND SECURE GROUND BONDING CLAMP TO STRUCTURE USING NUT AND LOCK WASHER. SPRAY GALVANOX IN NEW HOLE TO PREVENT RUST.
10. ORIENTATE 90° RIGID SWEEP TO MATE WITH THE TONEABLE DUCT.

THIS APPLICATION IS FOR USE ONLY OUT ON THE LINE, AND IS NOT TO BE USED FOR TAKING UNDERGROUND FIBER INTO A SUBSTATION

GUIDELINES FOR THE INSTALLATION OF THE UNDERGROUND LOCATING BOX

1.1 INSTALL 3'-0" OF 1/2" PVC CONDUIT UP THE BASE OF THE POLE TO 12" (1'-0") ABOVE THE GROUND LINE. ATTACH PVC CONDUIT TO THE POLE WITH 1/2" EMT STRAP.
1.2 ATTACH WEATHERPROOF PVC ELECTRICAL BOX TO TOP OF CONDUIT WITH PVC CONNECTOR AND TO THE POLE NEXT TO THE RISER.
1.3 PLACE TRACER WIRE IN 1/2" PVC CONDUIT AND ELECTRICAL BOX.
1.4 BOND TRACER WIRE TO TONEABLE DUCT TRACER WIRE. PROTECT CONNECTION FROM MOISTURE USING HEAT-SHRINK.
1.5 STRIP THE END OF THE TRACER WIRE BACK ONE INCH (1"), AND COVER W/WIRE NUT.
1.6 COIL THE TRACER WIRE IN THE ELECTRICAL BOX.
1.7 PLACE WATERPROOF COVER ON ELECTRICAL BOX.
1.8 LABEL THE COVER.

REFERENCE DRAWINGS

TRANSMISSION LINE STANDARDS STEEL AND CONCRETE POLE STRUCTURES FIBER OPTIC CABLE MOUNTING _____ 41 1028
TRANSMISSION LINE STANDARDS WOOD POLE STRUCTURES FIBER OPTIC MOUNTING _____ 41 1029
TRANSMISSION LINE STANDARDS FIBER OPTIC CABLE MOUNTING DOWNLEAD CLAMPS AND BANDS _____ 41 1030

UNITED STATES DEPARTMENT OF ENERGY
WESTERN AREA POWER ADMINISTRATION
HEADQUARTERS - LAKEWOOD, COLORADO

TRANSMISSION LINE STANDARDS
FIBER OPTIC CABLE
OVERHEAD TO UNDERGROUND TRANSITION

DESIGNED JEFFREY A. MILLER, P.E. APPROVED STEVEN ROCK, ELECTRICAL ENGINEERING MANAGER

CAE	OCTOBER 18, 2016	41	1035

Plotted By:denton Oct 18, 2016- 6:35am S:\projects\Misc\StandardDrawings\DesignDrawings\DesignDrawings\DwgsReadyForFinal\Scripts\41_1035.dwg Last Saved By: Denton, Debra on 10/18/2016 6:35 AM
IMAGES:
XREF(S):

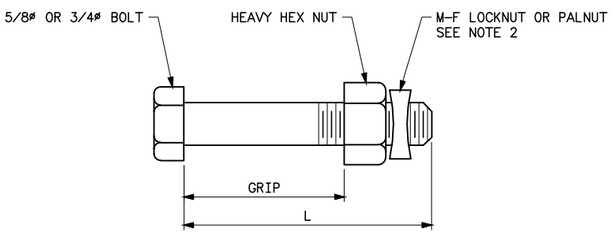

CONNECTION BOLT
ASTM A394 TYPE 1
ASTM A325 TYPE 1 (ALTERNATE)

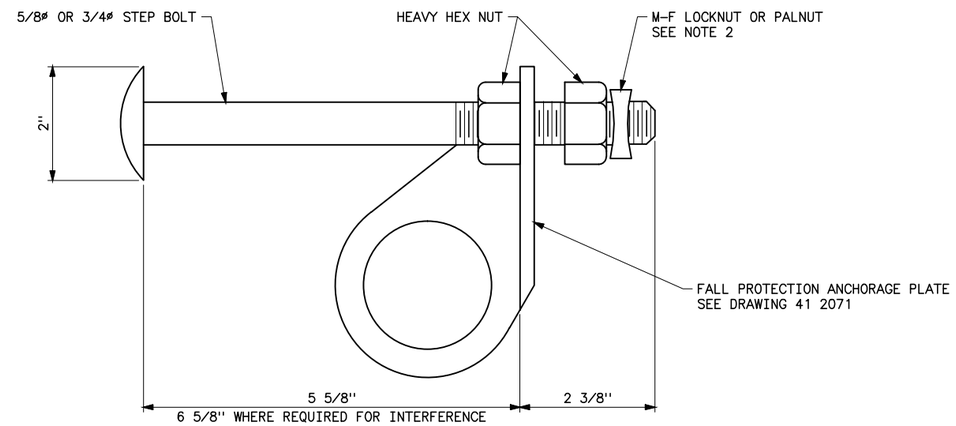

ASTM A394 TYPE 0

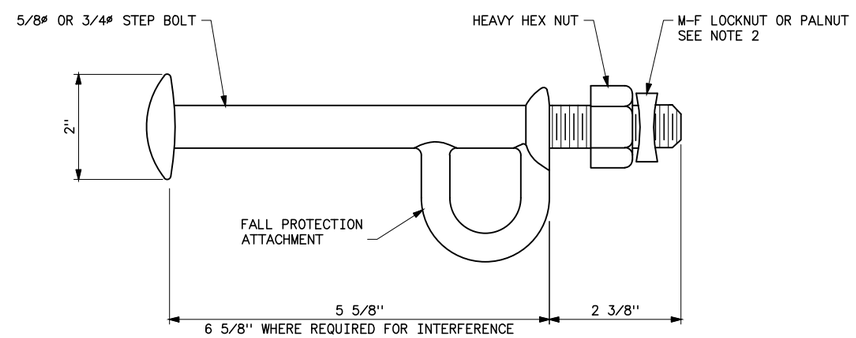

FORGED TYPE (ALTERNATE)

STEP BOLT

NOTES

1. GRIP INCLUDES FILLS AND WASHERS WHEN USED.
2. SELF-LOCKING HEAVY HEX NUTS (ANCO STYLE OR EQUAL) MAY BE USED IN LIEU OF HEAVY HEX NUT AND LOCKNUT.

BOLT LENGTHS REQUIRED FOR VARIOUS GRIPS

L FOR 3/4ø BOLTS	1 1/2"		1 3/4"				2"				2 1/4"				2" 1/2"				2 3/4"	
GRIP	1/4"	5/16"	3/8"	7/16"	1/2"	9/16"	5/8"	11/16"	3/4"	13/16"	7/8"	15/16"	1"	1 1/16"	1 1/8"	1 3/16"	1 1/4"	1 5/16"	1 3/8"	1 7/16"
L FOR 5/8ø BOLTS	1 1/2"				1 3/4"				2"				2 1/4"				2" 1/2"			

L FOR 3/4ø BOLTS	2 3/4"		3"				3 1/4"				3 1/2"				3 3/4"		
GRIP	1 1/2"	1 9/16"	1 5/8"	1 11/16"	1 3/4"	1 13/16"	1 7/8"	1 15/16"	2"	2 1/16"	2 1/8"	2 3/16"	2 1/4"	2 5/16"	2 3/8"	2 7/16"	2" 1/2"
L FOR 5/8ø BOLTS	2 3/4"				3"				3 1/4"				3 1/2"				3 3/4"

D	8-9-16 A7-CN	REVISED CONNECTION BOLT, STEP BOLT, AND BOLT LENGTH TABLE
C	7-15-03 A7-DH	REVISED TITLE BLOCK ONLY.
B	7-13-99 A3-DH	REDRAWN.

SUPERSEDES DWG NO. 40-D-5672

UNITED STATES DEPARTMENT OF ENERGY
WESTERN AREA POWER ADMINISTRATION
CORPORATE SERVICES OFFICE - LAKEWOOD, COLORADO

TRANSMISSION LINE STANDARDS

TOWER BOLTS

DESIGNED BUREC APPROVED DOUG HANSON
CIVIL ENGINEERING MANAGER

CAE	APRIL 10, 1979	41	2001

Aug 09, 2016- 9:03am Plotted By: denton S:\projects\Misc\StandardDrawings\DesignDrawings\xDwgsReadyforFinal\Scripts\41_2001d.dwg Last Saved By: denton IMAGES:

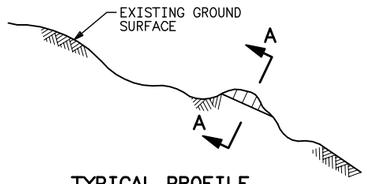

TYPICAL PROFILE
ALONG ℄ RIGHT OF WAY

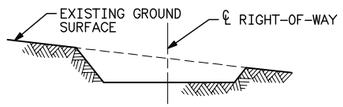

SECTION A–A
TYPICAL LINE CLEARANCE EXCAVATION
LOCATIONS AND DIMENSIONS OF CUT TO BE AS DIRECTED

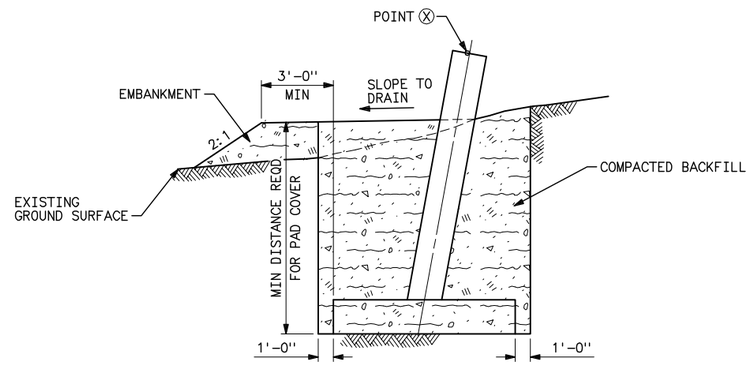

TYPICAL FOOTING COVER EMBANKMENT
FOR USE AS DIRECTED WHEN COMPACTED BACKFILL TO EXISTING GROUND SURFACE DOES NOT PROVIDE REQUIRED FOOTING PAD COVER (NOT TO BE USED ON GROUND SLOPE STEEPER THAN 3 TO 1)

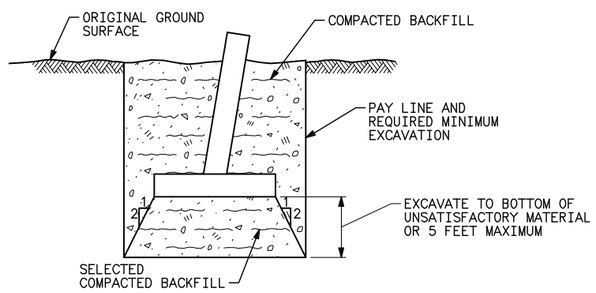

SPECIAL EXCAVATION AND COMPACTED BACKFILL
FOR TYPES D OR F FOOTIMGS
FOR USE AS DIRECTED WHERE UNSATISFACTORY MATERIALS, WHICH DO NOT MEET THE REQUIRED BEARING CLASSIFICATION FOR FOUNDATION MATERIALS, ARE ENCOUNTERED AT THE BOTTOM OF NORMAL EXCAVATION

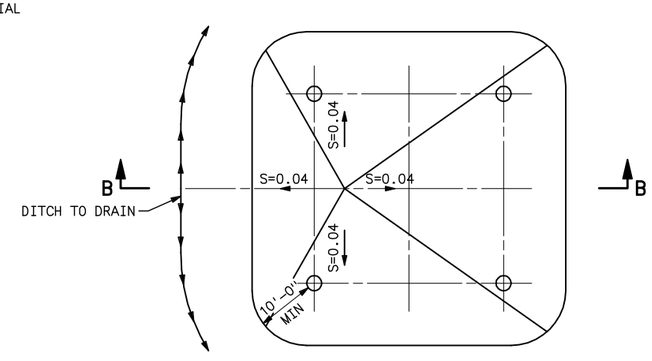

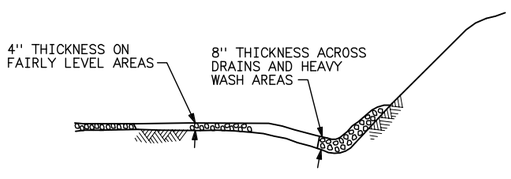

TYPICAL SECTION
OF
GRAVEL BLANKET PROTECTION FOR TOWER SITES
LOCATIONS AND EXTENT OF PROTECTED AREA TO BE AS DIRECTED

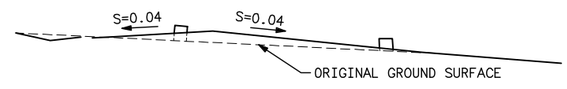

SECTION B–B
EMBANKMENT IN LOESS
FOR USE AS DIRECTED WHEN TYPE "AL" FOOTING IS REQUIRED
NOT REQUIRED WHERE GROUND SLOPE IS ≧ 0.04

D	9-12-12 A7-DH	CORRECTED SPELLING ERRORS.
C	7-15-03 A7-DH	REVISED TITLE BLOCK ONLY.
B	7-13-99 A3-DH	REDRAWN.

UNITED STATES DEPARTMENT OF ENERGY
WESTERN AREA POWER ADMINISTRATION
CORPORATE SERVICES OFFICE – GOLDEN, COLORADO

TRANSMISSION LINE STANDARDS

SPECIAL EARTHWORK

DESIGNED BUREC APPROVED DOUG HANSON
CIVIL ENGINEERING MANAGER

CAE	JANUARY 29, 1982	41	2017

Thu Sep 02 1999 08:20:57 AM G:\users\Cox\41_2017.dwg

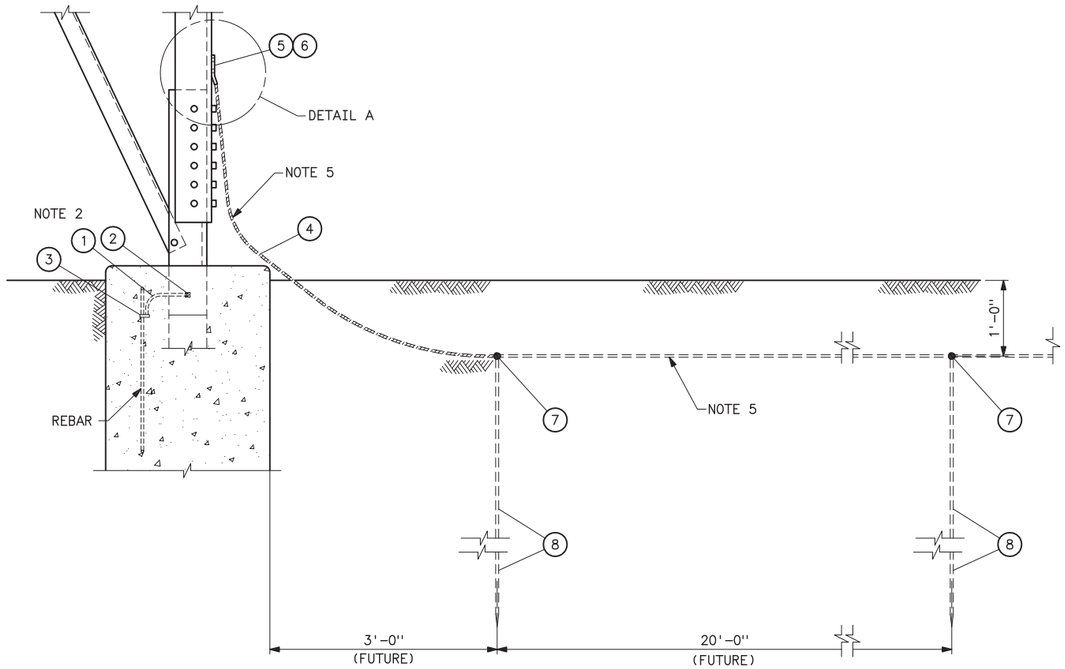

SECTION A-A
GROUNDING CONNECTION

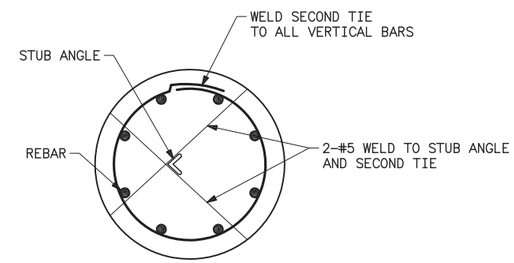

WELDING PLAN
(LONGITUDINAL REINFORCEMENT NOT SHOWN)

BILL OF MATERIAL

ITEM NO.	NO. REQD	DESCRIPTION
1	4	4/0 COPPER WIRE, LENGTH AS REQUIRED
2	4	CABLE TO BAR GROUND CONNECTOR SIMILAR TO BURNDY TYPE GB
3	4	CABLE TO ROD GROUND CONNECTOR SIMILAR TO BURNDY TYPE GAR
4	4	COPPER CLAD STEEL WIRE NO. 4/0 AWG, 30% CONDUCTIVITY, LENGTH AS REQUIRED
5	4	NEMA 2 HOLE PAD (NOTE 6)
6	8	BOLT, 1/2 IN GALVANIZED WITH NUT & LOCK WASHER. LENGTH AS REQUIRED
7	4	CABLE TO GROUND ROD CONNECTOR (NOTE 4)
8	4	5/8" x 10'-0" GROUND RODS

NOTES

1. GROUND THE TOWER TO THE REBAR IN THE FOUNDATION. IF THE DESIRED RESISTIVITY IS NOT ACHIEVED, INSTALL THE RING WITH GROUND RODS. EXTEND GROUND WIRES WITH GROUND RODS EVERY 20 FEET AS REQUIRED TO ACHIEVE DESIRED RESISTIVITY AS DIRECTED BY THE COR.
2. CONNECT EACH STUB ANGLE TO REBAR BY WELDING OR WITH PAD, WIRE, AND CONNECTOR. ADDITIONAL PADS, WIRE, AND CONNECTORS MAY BE REQUIRED TO ACHIEVE DESIRED RESISTIVITY.
3. DRIVE GROUND RODS TO ACHIEVE DESIRED RESISTIVITY AS DIRECTED BY THE COR. IF ROCK IS ENCOUNTERED BEFORE ACHIEVING DEPTH OF THE GROUND ROD, MUST DRILL A MIN 3 IN. HOLE TO DEPTH AND FILL WITH "GEM" PLACING GROUND ROD IN CENTER OF HOLE.
4. GROUND ROD CONNECTIONS SHALL BE CADWELD, THERMOWELD, TECTOWELD OR EQUIVALENT PROCESS.
5. ALWAYS MAINTAIN A MIN BEND RADIUS OF 8 INCHES FOR ALL GROUND WIRES AND CONNECTIONS.
6. THE TWO 9/16" HOLES FOR THE ATTACHMENT MUST BE ON THE CENTER OF THE EXISTING LEG. SPRAY OVER DRILLED HOLES WITH ZINC PAINT.
7. EXTERNAL PIGTAILS SHALL NOT BE EMBEDDED IN THE CONCRETE.

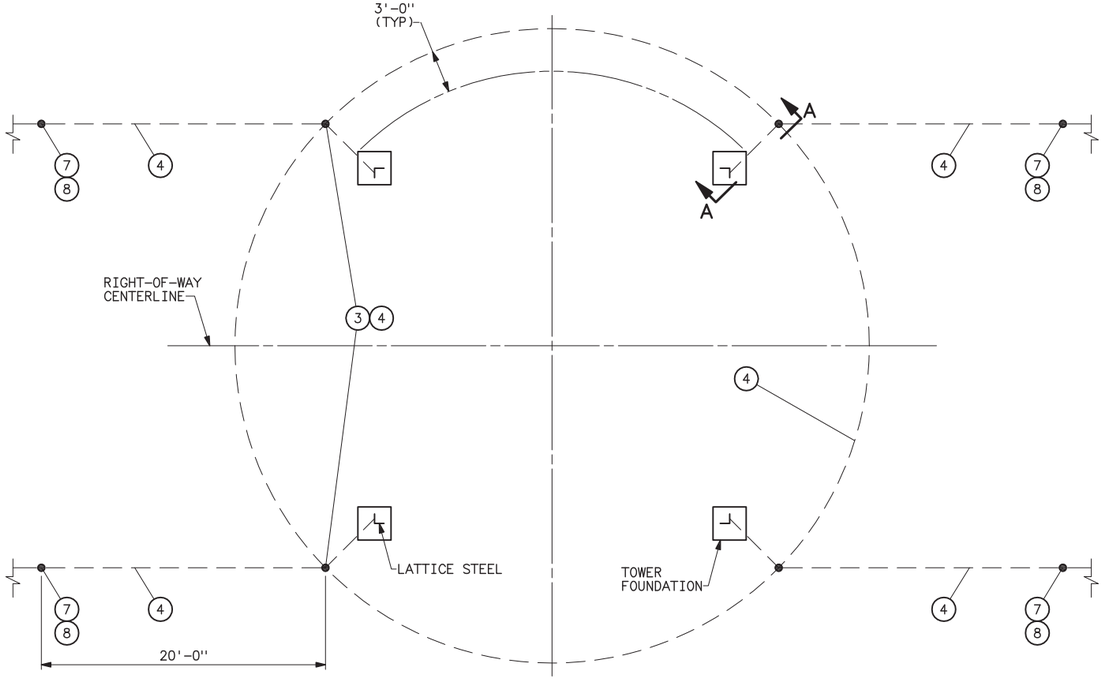

PLAN VIEW
TOWER CONNECTION DETAIL
(FUTURE)

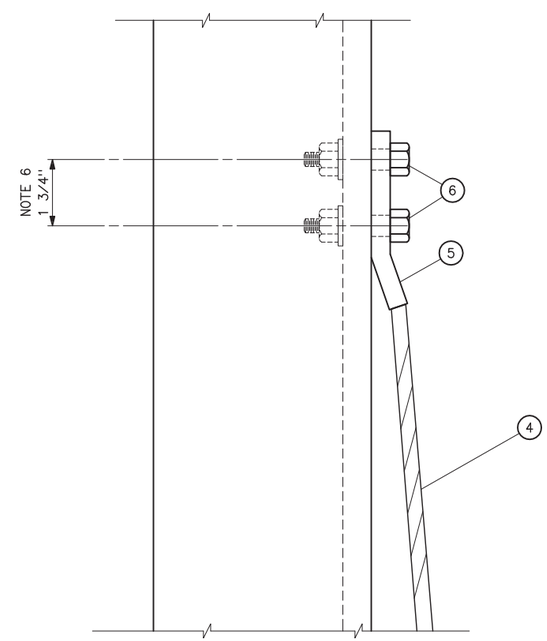

DETAIL A

A	10-10-03 A7-RC	REVISED TO SHOW PRIMARY STRUCTURE GROUNDING INSIDE FOUNDATION

UNITED STATES DEPARTMENT OF ENERGY
WESTERN AREA POWER ADMINISTRATION
CORPORATE SERVICES OFFICE – LAKEWOOD, COLORADO

TRANSMISSION LINE STANDARDS
LATTICE STEEL TOWERS
STRUCTURE GROUNDING

DESIGNED J. WILD APPROVED ROSS CLARK
ELECTRICAL ENGINEERING MANAGER

CAD	JULY 15, 2003	41	2034

Mar 23, 2006- 11:00am Plotted By: Sevio S:\Engineering\Standard Drawings\41\41_2034a.dwg Last Saved By: Cox IMAGES:

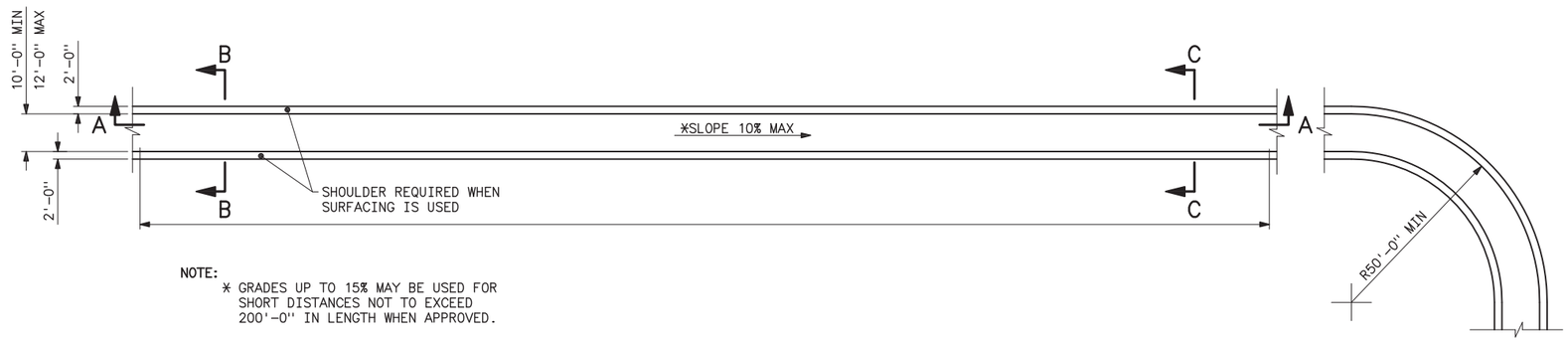

NOTE:
* GRADES UP TO 15% MAY BE USED FOR SHORT DISTANCES NOT TO EXCEED 200'-0" IN LENGTH WHEN APPROVED.

WIDTH

CURVES

ACCESS ROADS

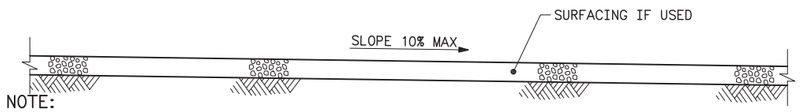

NOTE:
SLOPE GRADE 8% MAX ON SWITCHBACKS WHEN APPROVED.

SECTION A-A

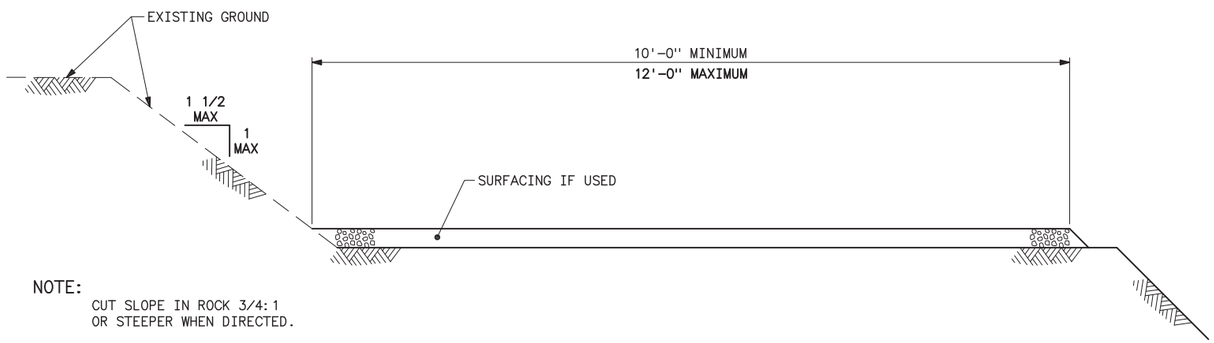

NOTE:
CUT SLOPE IN ROCK 3/4:1 OR STEEPER WHEN DIRECTED.

SECTION B-B

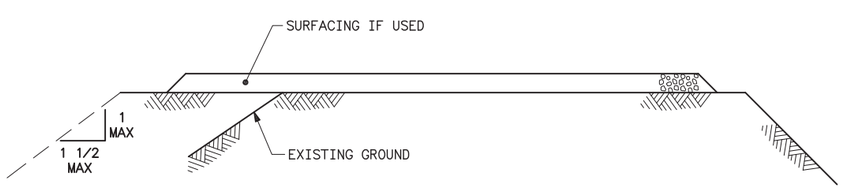

SECTION C-C

A	7-15-03 A7-DH	REVISED TITLE BLOCK ONLY.

SUPERSEDES DWG NO. 43 2212

UNITED STATES DEPARTMENT OF ENERGY
WESTERN AREA POWER ADMINISTRATION
CORPORATE SERVICES OFFICE – LAKEWOOD, COLORADO

TRANSMISSION LINE STANDARDS
ACCESS ROADS
GENERAL REQUIREMENTS

DESIGNED DOUG HANSON APPROVED DOUG HANSON
CIVIL ENGINEERING MANAGER

CAE	APRIL 28, 2003	41	2035

Mar 23, 2006- 11:00am Plotted By: Seela S:\Engineering\Standard Drawings\41\41_2035a.dwg Last Saved By: palmer IMAGES:

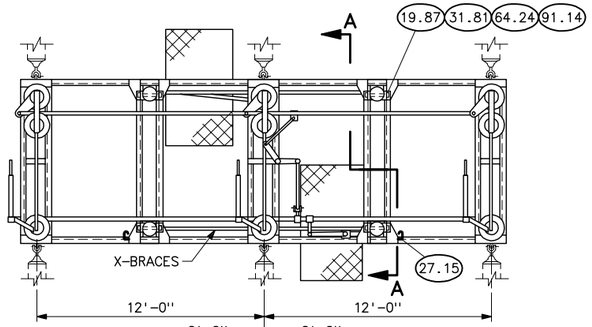

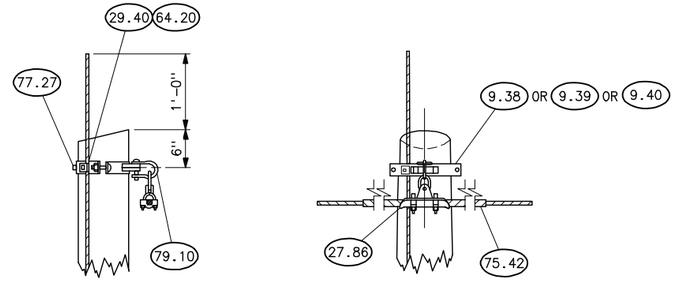

DETAIL OF OVERHEAD GROUND WIRE ATTACHMENT

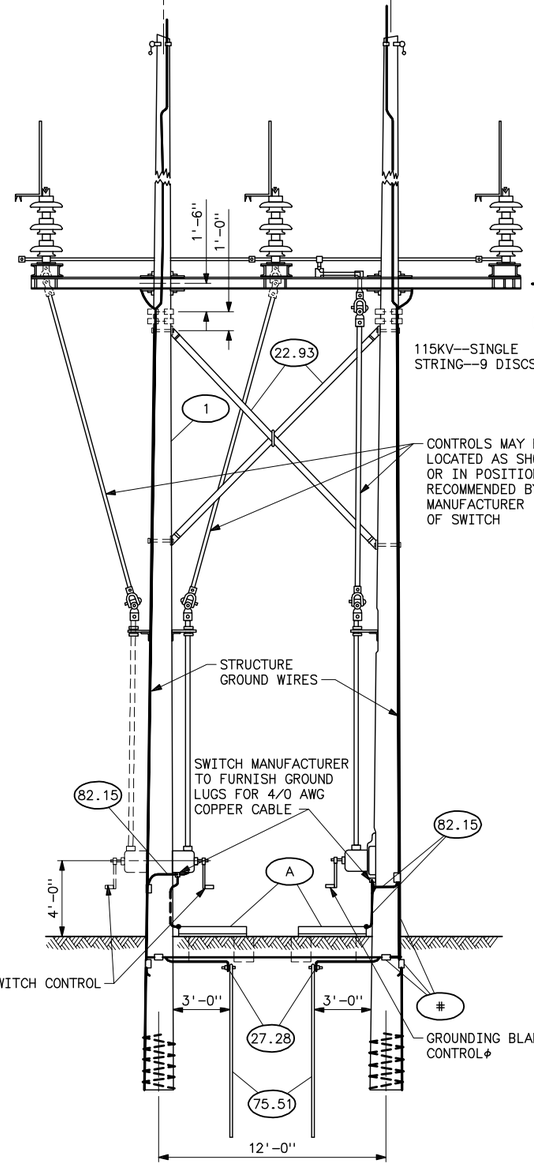

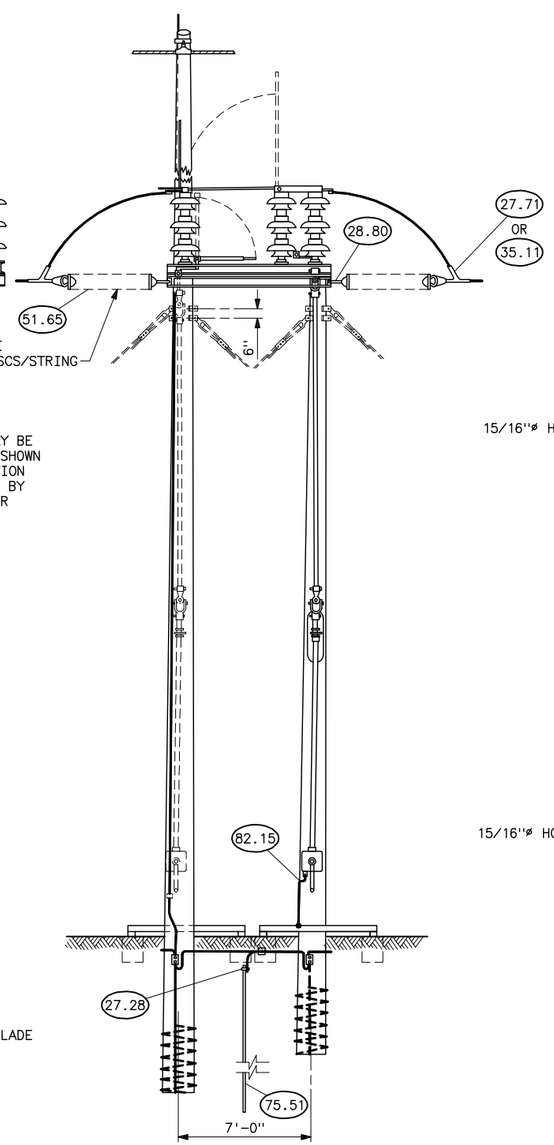

SECTION A-A

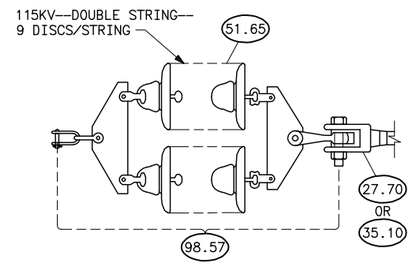

DOUBLE INSULATOR STRING ASSEMBLY≠

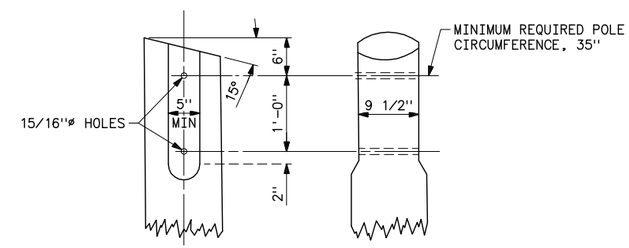

DETAIL OF SHORT POLE

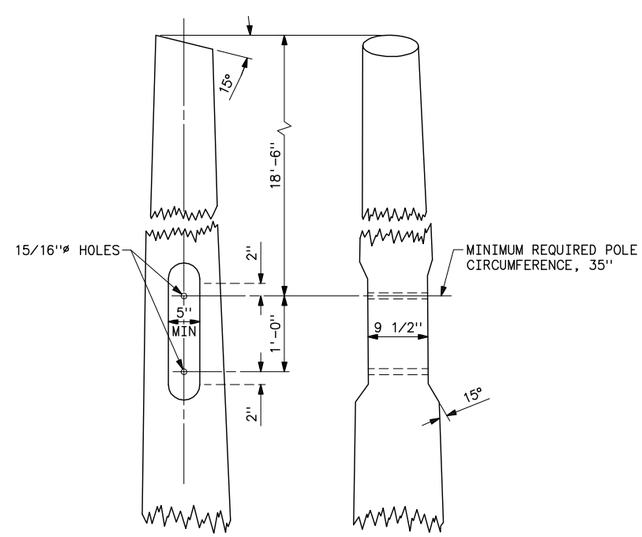

DETAIL OF LONG POLE

STRUCTURE MATERIAL

PART NO.	QUANTITY 115KV WITH OGW	QUANTITY 115KV W/O OGW	DESCRIPTION	DWG NO. 41
1	4	4	POLE	
19.87	8	8	BOLT, MACHINE 7/8"x14"	
22.93	2	2	X-BRACES, COMPLETE WITH FITTINGS, (3 1/8"x 4 3/8")	6029
27.15	2	2	CLAMP, BELCHER, 15/16" HOLE SPACING, 1/2" J-BOLT	
27.28	2	2	CLAMP, COPPER ALLOY FOR GROUND ROD	
31.81	16	16	CONNECTOR, SHEAR PLATE, 4" DIAMETER FOR 7/8" BOLT (WOOD TO METAL)	
64.24	8	8	LOCKNUT, FOR 7/8" BOLT	
75.51	2	2	GROUND ROD, COPPERWELD 3/4"x10'	
82.15	40 FT.	40 FT.	4/0 AWG 19 STRAND COPPER CABLE	
84.10	1	1	AIR-BREAK SWITCH, COMPLETE WITH MOUNTING BOLTS	
84.15	1	1	BASE, SWITCH	6092
91.14	8	8	LOCK WASHER, SPRING, FOR 7/8" BOLT	
A	2	2	SWITCH OPERATING PLATFORM, DETAIL "A"	31 1075
#	GROUNDING MATERIAL, PART NUMBERS AND DESCRIPTION SHOWN ON 41 1012			

INSULATOR MATERIAL

PART NO.	SINGLE STRING	DOUBLE≠ STRING	DESCRIPTION		DWG NO. 41
27.70 OR 35.10		6	CLAMP, STRAIN WITH CLEVIS FITTING FOR CONDUCTOR		
			DEAD END, COMPRESSION TYPE		
27.71 OR 35.11	6		CLAMP, STRAIN WITH SOCKET FITTING FOR CONDUCTOR		1002
			DEAD END, COMPRESSION TYPE WITH SOCKET FITTING		1002
28.80	6		CLEVIS, Y-BALL		1003
51.65	6	54-DISCS	INSULATOR, ASSEMBLY 5 3/4" SPACING	SINGLE STRING, DEAD END	1002
		108-DISCS		≠ DOUBLE STRING, DEAD END	
98.57		6	DOUBLE YOKE ASSEMBLY, COMPLETE WITH FITTINGS		1004

OVERHEAD GROUND WIRE MATERIAL

PART NO.	QUANTITY	DESCRIPTION	DWG NO. 41
9.38-9.39 OR 9.40	2Δ	BAND, POLE TOP	6035, 6036, 6037
27.86	2Δ	CLAMP, SUSPENSION WITH 2 1/4" LINK FOR OVERHEAD GROUND WIRE	
29.40	2	CLIP, GROUND, WITH 3/8"x1 1/2" CARRIAGE BOLT AND M.F. LOCKNUT	6035, 6036, 6037
64.20	2	LOCKNUT FOR 3/8" BOLT	
75.42	2 SETS	ROD, ARMOR, PREFORMED, FOR 3/8" STEEL STRAND	
77.27	2	LAG SCREW, 1/2"x4", FETTER DRIVE THREAD	
79.10	2	SHACKLE FOR POLE TOP BAND	6036, 6037

REFERENCE DRAWINGS

GROUNDING DETAILS 41 1012
GUYING DETAILS 41 6056
STEEL DETAILS 41 6092

NOTES

1. USE TWO LAG SCREWS AND WASHERS FOR EACH FOUR-WAY STRAIN BAND.
2. Δ ANCHOR TYPE SHACKLE AND 2 1/4" LINK NOT REQUIRED WHEN TYPE B POLE TOP BAND, DWG NO 41 6035 IS USED.
3. ≠ USE ONLY WHEN SPECIFIED.
4. ϕ FOR SWITCH WITH HANDLE OPERATED MECHANISM SEE DETAIL E, DWG. 31 1075 FOR GROUNDING.

B	3-2-11 A7-DDD	REDRAWN AND REVISED TITLE BLOCK TO BE CONSISTENT WITH TRANSMISION LINE STD DWGS.

SUPERSEDES DWG NO. 40-D-5189

UNITED STATES DEPARTMENT OF ENERGY
WESTERN AREA POWER ADMINISTRATION
CORPORATE SERVICES OFFICE - LAKEWOOD, COLORADO

STANDARD DESIGNS TRANSMISSION LINES
TYPE 4SWT 115KV DISCONNECTING SWITCH STRUCTURE

DESIGNED BUREC APPROVED BUREC

A	SEPTEMBER 29, 1980	41	6005

Plotted By: seela Apr 26, 2011- 8:29am
IWWS: C:\Documents and Settings\dbrown\Desktop\41_6005a.tif;
S:\Projects\Wilmes\StandardDrawings\DesignDrawings\xDwgsReadyForFinal\Scripts\41_6005b.dwg Last Saved By: Debbie Denton on 3/2/2011 2:57 PM

MATERIAL LIST		
ITEM NO.	DESCRIPTION	DWG NO. 41
1	BAND, FOUR-WAY STRAIN	6030
2	CLIP, GROUND, WITH 3/4x2 1/2 CONE HEAD BOLT	6030
3	COMPRESSION DEAD END, EYE-TYPE FOR OGW	
4	LINK, CONNECTING PAIR	6030
5	LOCKNUT FOR 3/4 BOLT	
6	LAG SCREW, 1/2x4, FETTER DRIVE THREAD	
7	WASHER, ROUND FLAT, 1 3/8 OD, 9/16 HOLE	

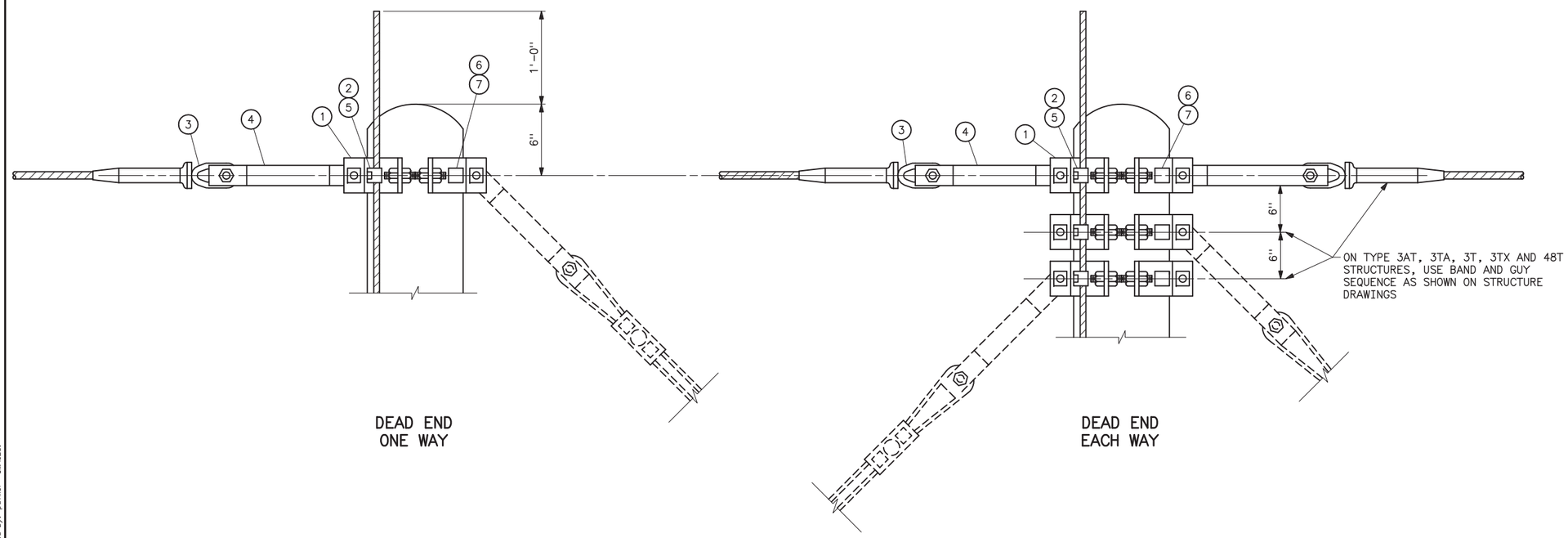

TYPICAL OGW ATTACHMENT USING EYE-TYPE COMPRESSION DEAD ENDS

REFERENCE DRAWINGS

115KV
TYPE 3DE _____ 41 6004
TYPE HS _____ 41 6010
TYPE HSB _____ 41 6011
TYPE 3TA _____ 41 6018
TYPE 3AT _____ 41 6074
TYPE 3T _____ 41 6075
TYPE 3TX _____ 41 6093
TYPE 4BT _____ 41
TYPE 4S _____ 41 6105

138 & 161KV
TYPE 3DE _____
TYPE HS _____ 41 6006
TYPE HSB _____ 41 6007
TYPE 3TA _____ 41 6018
TYPE 3AT _____ 41
TYPE 3T _____ 41 6017
TYPE 3TX _____
TYPE 4BT _____
TYPE 4S _____

D	7-15-03 A7-DH	REVISED TITLE BLOCK ONLY.
C	3-20-92 A2-BH	REDRAWN

SUPERSEDES DWG NO. 40-D-5764

UNITED STATES DEPARTMENT OF ENERGY
WESTERN AREA POWER ADMINISTRATION
CORPORATE SERVICES OFFICE - LAKEWOOD, COLORADO

TRANSMISSION LINE STANDARDS
WOOD-POLE DEAD END DETAILS
FOR OVERHEAD GROUND WIRE

DESIGNED BUREC _____ APPROVED DOUG HANSON
CIVIL ENGINEERING MANAGER

A	AUGUST 6, 1979	41	6042

Mar 23, 2006- 11:04am Plotted By: Seelo S:\Engineering\Standard Drawings\41\41_6042d.dwg Last Saved By: palmer IMAGES:

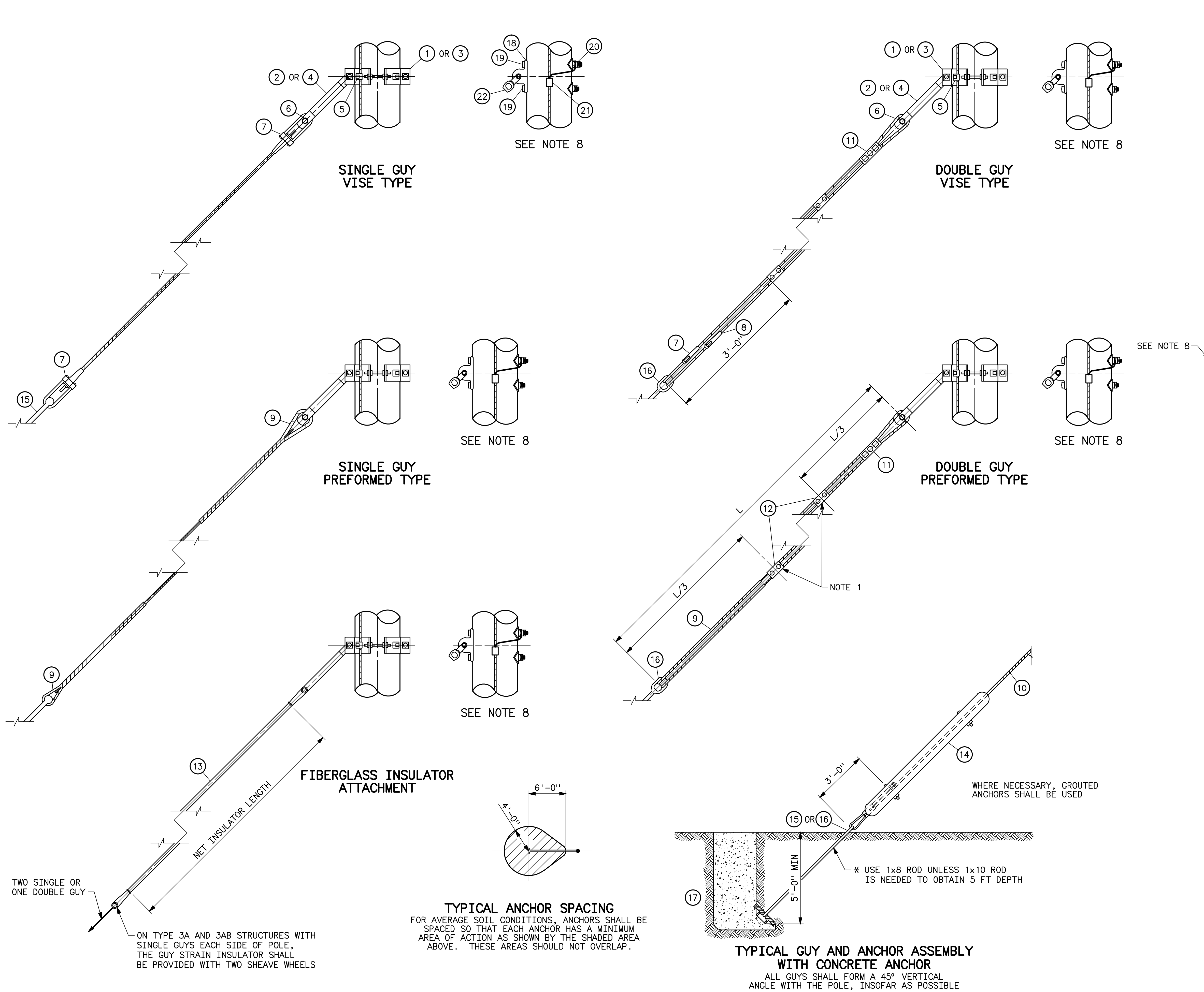

REFERENCE MATERIALS

ITEM NO.	DESCRIPTION
1	FOUR-WAY STRAIN BAND EQUAL TO HUGHES BROS. NO. 3105 WITH TWO 1/2"ø×4" LAG SCREWS AND WASHERS PER BAND
2	LINK, CONNECTING PAIR EQUAL TO HUGHES BROS. 3154
3	FOUR-WAY STRAIN BAND EQUAL TO HUGHES BROS. NO. 3112
4	LINK, CONNECTING PAIR, EQUAL TO HUGHES BROS. 3157
5	1/2"ø GROUNDING CLIP ASSEMBLY (INCLUDES BONDING CLIP, CARRIAGE BOLT, NUT AND LOCKNUT) HUGHES 2718.55 OR EQUAL
6	SHEAVE WHEEL SUITABLE FOR 7/16"ø STRAND
7	DEADEND, AUTOMATIC VISE TYPE FOR GUY STRAND, WITH SHORT BAIL
8	DEADEND, AUTOMATIC VISE TYPE FOR GUY STRAND, WITH EXTRA LONG BAIL
9	DEADEND, PREFORMED TYPE FOR GUY STRAND
10	STRAND, GALVANIZED, 7/16" HIGH STRENGTH STEEL
11	CLAMP, GUY, 3 BOLT, 6" LONG
12	2-BOLT GUY CLAMP
13	INSULATOR, FIBERGLASS GUY STRAIN WITH BNK AND SHEAVE WHEEL. MINIMUM ULTIMATE STRENGTH OF 29,000 LBS. (SEE TABLE)
14	GUY PROTECTOR
15✱	ANCHOR ROD, 1"x8'-0", THIMBLEYE
16✱	ANCHOR ROD, 1"x8'-0", TWINEYE
17	CONCRETE ANCHOR (DWG NO. 41 6049)
18	DEAD-END TEE EQUAL TO HUGHES BROS. NO. 2817R4.5-15-15C
19	7/8"ø SQUARE HEAD BOLT WITH CURVED WASHER, SQUARE NUT, AND LOCKNUT
20	BOND CLIP EQUAL TO HUGHES BROS. NO. 2727.8
21	PARALLEL GROOVE CLAMP, 2-BOLT COPPER ALLOY
22	DUCTILE DEADEND THIMBLE, EQUAL TO ANDERSON TYPE DDT-07 WITH BNK, 40,000 LBS ULT. STRENGTH

SEE NOTE 8 (items 18–22)

NOTES

1. INSTALL TWO BOLT CLAMPS ON EACH DOUBLE GUY TO PREVENT THE TWO STRANDS FROM SLAPPING TOGETHER UNDER WIND CONDITIONS.
2. CLAMPS ARE TO BE INSTALLED AFTER DOUBLE GUY HAS BEEN TIGHTENED.
3. FOR LOCATION OF BANDS, SEE INDIVIDUAL STRUCTURE DRAWINGS.
4. ADDITIONAL DETAILS ARE SHOWN ON STANDARD GUY ARRANGEMENT AND ASSEMBLY DRAWINGS.
5. FOR GUY EACH SIDE OF POLE ON TYPE 3A AND 3AB STRUCTURES, SEE DWG NO. 41 6053. FOR TWO SINGLE GUYS, INSULATOR SHALL BE PROVIDED WITH TWO SHEAVE WHEELS.
6. ✱ TO BE USED WHEN SPECIFIED.
7. BNK INDICATES BOLT, NUT, AND STAINLESS STEEL COTTER KEY REQUIRED.
8. DEAD-END TEES MAY BE USED IN LIEU OF POLE BANDS AS SHOWN. DUCTILE DEADEND THIMBLE REPLACES CONNECTING LINKS AND SHEAVE WHEELS THAT ARE USED WITH POLE BAND CONSTRUCTION.

FIBERGLASS INSULATOR DATA

KV	MINIMUM NET LENGTH OF FIBERGLASS	NO ARCING HORNS
138	6'-3"	
161	7'-0"	
230	8'-6"	

F	01-06-05 A7-KKR	ADDED DEAD-END TEE OPTION.
E	7-15-03 A7-DH	REVISED TITLE BLOCK ONLY.
D	11-30-96 A3-TEC	REVISED AND REDRAWN ON CAE SYSTEM.

SUPERSEDES DWG NO. 40-D-5674

UNITED STATES DEPARTMENT OF ENERGY
WESTERN AREA POWER ADMINISTRATION
CORPORATE SERVICES OFFICE - LAKEWOOD, COLORADO

TRANSMISSION LINE STANDARDS

GUY ASSEMBLY AND DETAILS

DESIGNED KAREN ROWE APPROVED DOUG HANSON CIVIL ENGINEERING MANAGER

CAE | AUGUST 6, 1979 | 41 | 6047

Plotted By:denton Sep 22, 2010- 2:04pm ... on 4/5/2007 12:35 PM

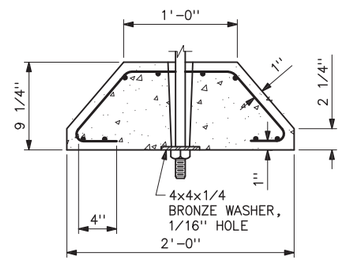

CONCRETE ANCHOR

REINFORCE WITH 12 PIECES OF WIRE TIED TOGETHER WITH WIRE HOOPS AS SHOWN 0.1483 DIA COLD DRAWN STEEL WIRE ASTM SPEC A82

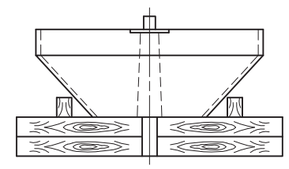

SET UP FOR POURING CONCRETE ANCHOR

CONCRETE SHALL BE 1-2-4 MIX USING "PEA" GRAVEL

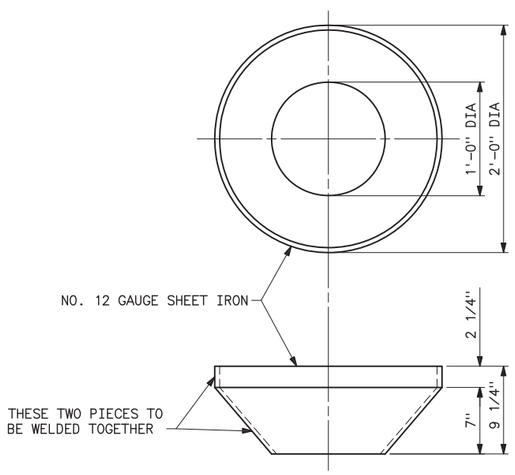

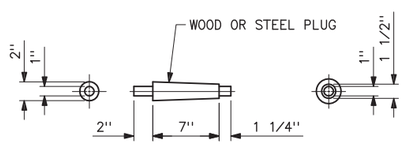

DETAILS OF FORM FOR CONCRETE ANCHOR

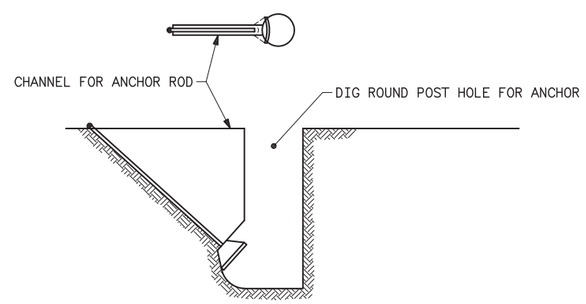

DETAILS OF INSTALLATION
OF CONCRETE ANCHOR

EARTH TO BE WELL TAMPED WHEN BACKFILLED

D	7-15-03 A7-RC	REVISED TITLE BLOCK ONLY.
C	7-13-99 A3-RMC	REDRAWN.

SUPERSEDES DWG NO. 40-D-3585

UNITED STATES DEPARTMENT OF ENERGY
WESTERN AREA POWER ADMINISTRATION
CORPORATE SERVICES OFFICE - LAKEWOOD, COLORADO

TRANSMISSION LINE STANDARDS

CONCRETE ANCHORS

DESIGNED BUREC APPROVED ROSS M. CLARK
ELECTRICAL ENGINEERING MANAGER

CAD	AUGUST 6, 1979	41	6049

Mar 23, 2006- 11:04am Plotted By: Seela S:\Engineering\Standard Drawings\41\41_6049a.dwg Last Saved By: palmer IMAGES:

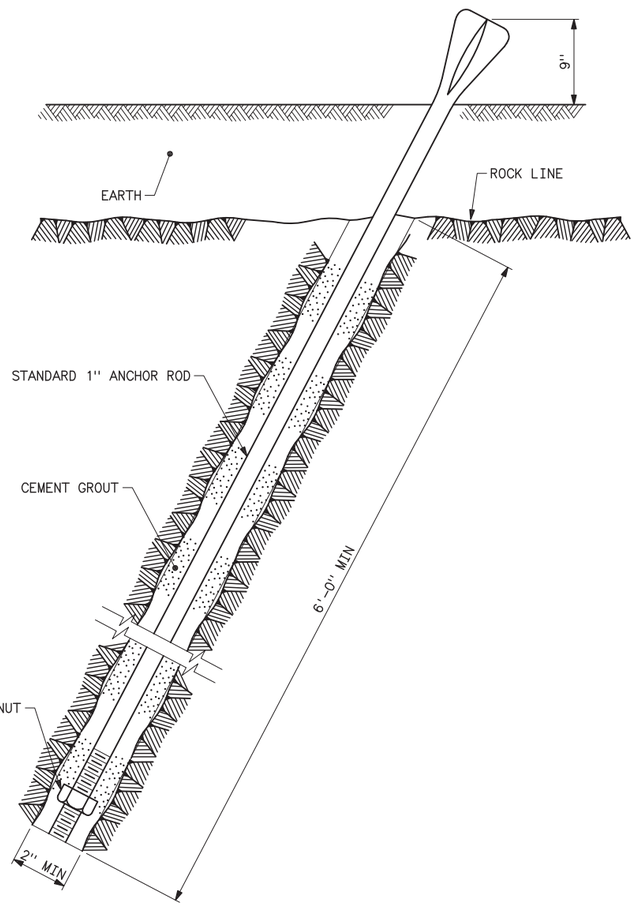

D	7-15-03 A7-RC	REVISED TITLE BLOCK ONLY.
C	7-13-99 A3-RMC	REDRAWN.

SUPERSEDES DWG NO. 40-D-3610

UNITED STATES DEPARTMENT OF ENERGY
WESTERN AREA POWER ADMINISTRATION
CORPORATE SERVICES OFFICE - LAKEWOOD, COLORADO

TRANSMISSION LINE STANDARDS

ANCHOR ROD GROUTING DETAILS

DESIGNED BUREC APPROVED ROSS M. CLARK
ELECTRICAL ENGINEERING MANAGER

CAE	AUGUST 6, 1978	41	6050

Mar 23, 2006- 11:04am Plotted By: Seela S:\Engineering\Standard Drawings\41\41_6050d.dwg Last Saved By: palmer IMAGES:

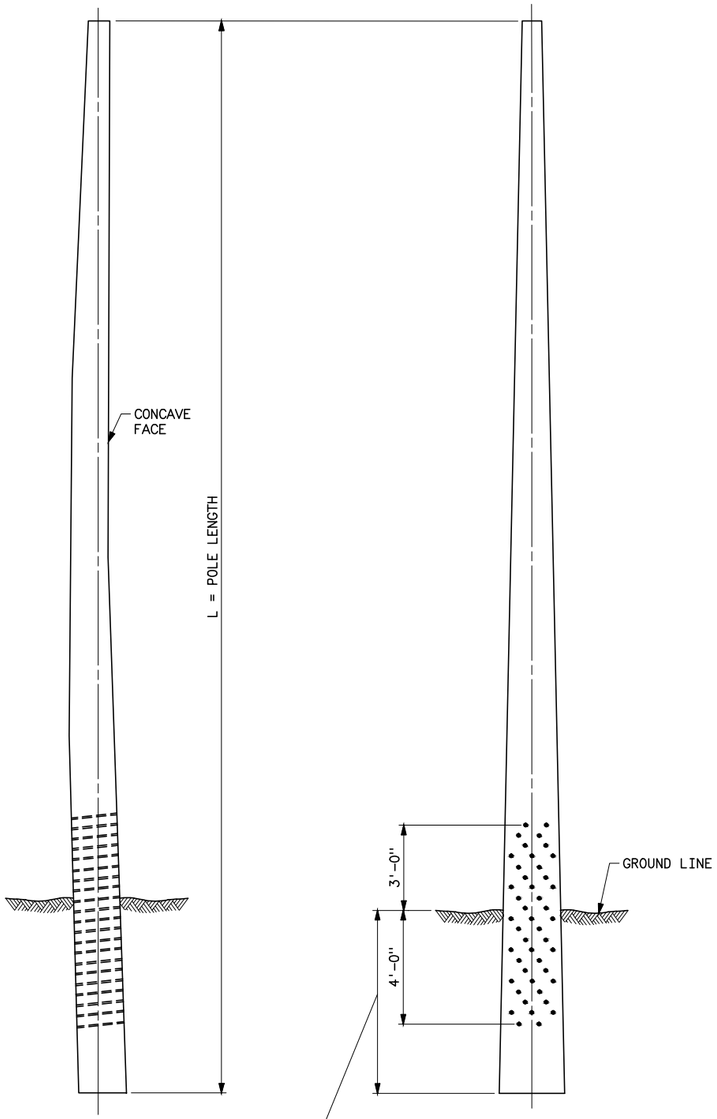

DEPTH OF SET	
POLE LENGTH (FT)	SET
40 TO 90 INCL	10% OF L PLUS 2 FT
90 TO 100	11 FT
105 TO 125 INCL	12 FT

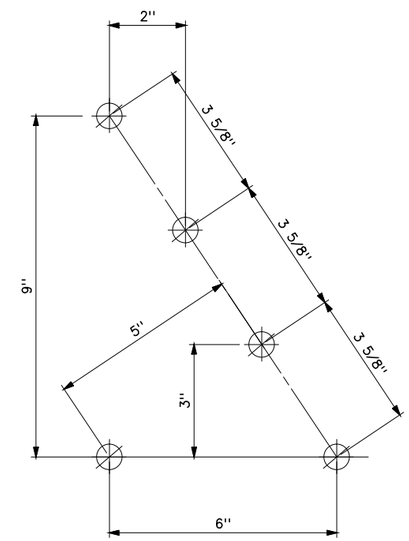

DETAIL A

PATTERN FOR HOLE DRILLING TEMPLATE

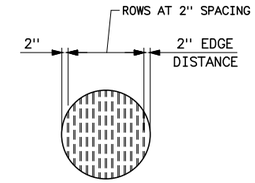

SECTION A–A

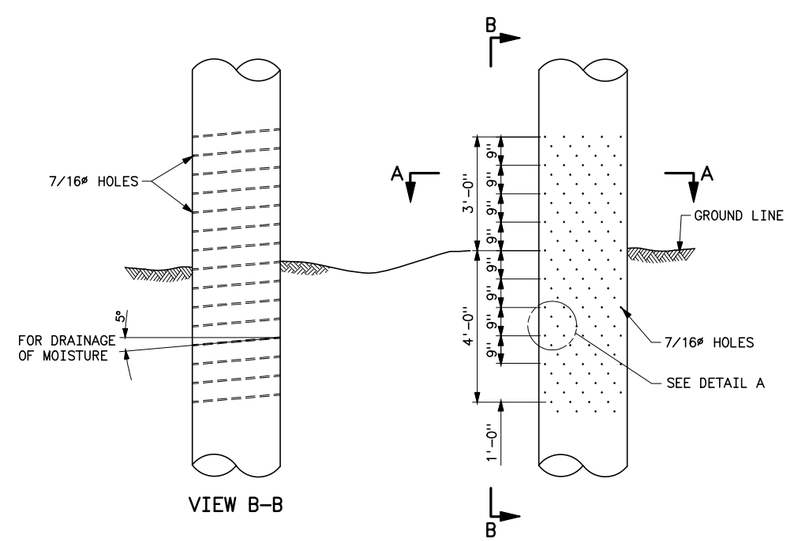

VIEW B–B

GROUND LINE HOLE DRILLING

NOTES

1. ALL HOLES TO BE MADE BEFORE TREATMENT
2. ALL HOLES SHALL BE COMPLETELY DRILLED THROUGH THE POLE FROM ONE DIRECTION
3. HOLES SHALL RUN PARALLEL TO CONDUCTOR

B	7-15-03 A7-DH	REVISED TITLE BLOCK ONLY.
A	3-27-95 A2-RMC	CHANGED DRILLED ZONE

UNITED STATES DEPARTMENT OF ENERGY
WESTERN AREA POWER ADMINISTRATION
CORPORATE SERVICES OFFICE – LAKEWOOD, COLORADO

TRANSMISSION LINE STANDARDS
DOUGLAS FIR POLES
DRILLING DETAILS

DESIGNED K. ROWE APPROVED R.W. McCAFFERTY
DIRECTOR, DIVISION OF TRANSMISSION LINE AND BUILDING DESIGN

CAF	JUNE 10, 1988	41	6106

Plotted By:denton Sep 28, 2010- 9:22am
IMAGES:
CSWPROJ:P:\Drawings\Rights of Way\Denver\Div16\Department standards\Transmission Line\Wood Poles\Douglas Fir\DOUGLAS FIR DRILLING.dwg Saved:Sep 28,2010 9:21:23AM

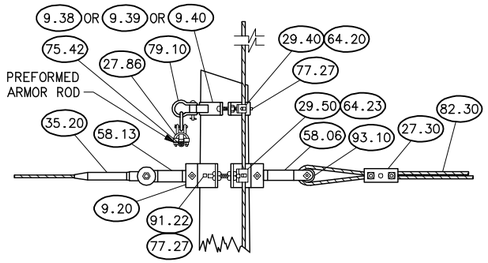

SECTION A–A

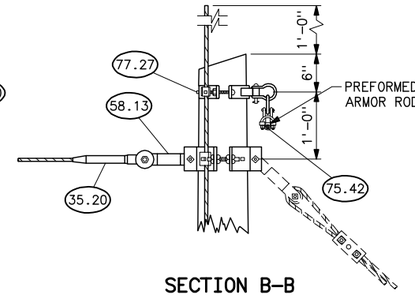

SECTION B–B

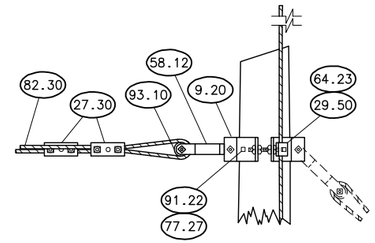

SECTION C–C

DETAIL OF OVERHEAD GROUND WIRE AND POLE TIE ATTACHMENT

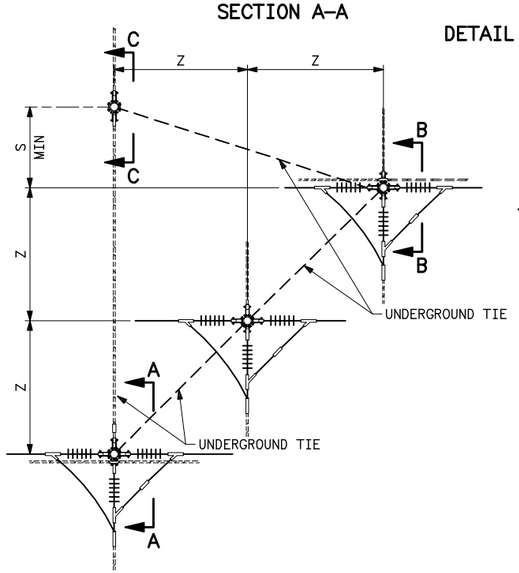

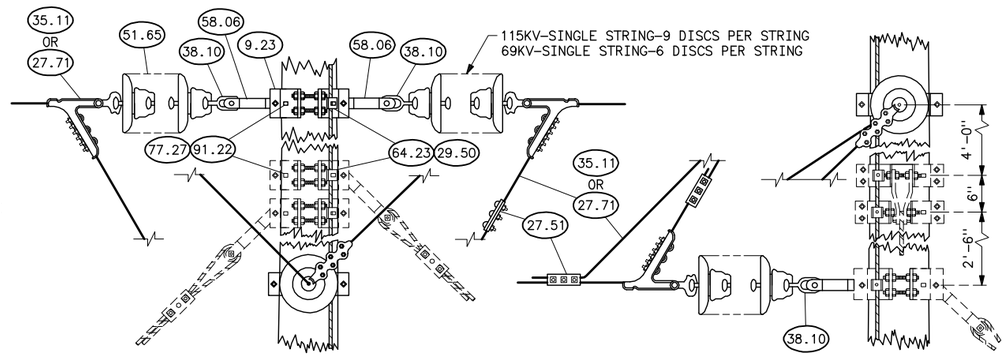

DETAIL OF CONDUCTOR DEAD END AND TENSION ASSEMBLY AND POLE ATTACHMENT

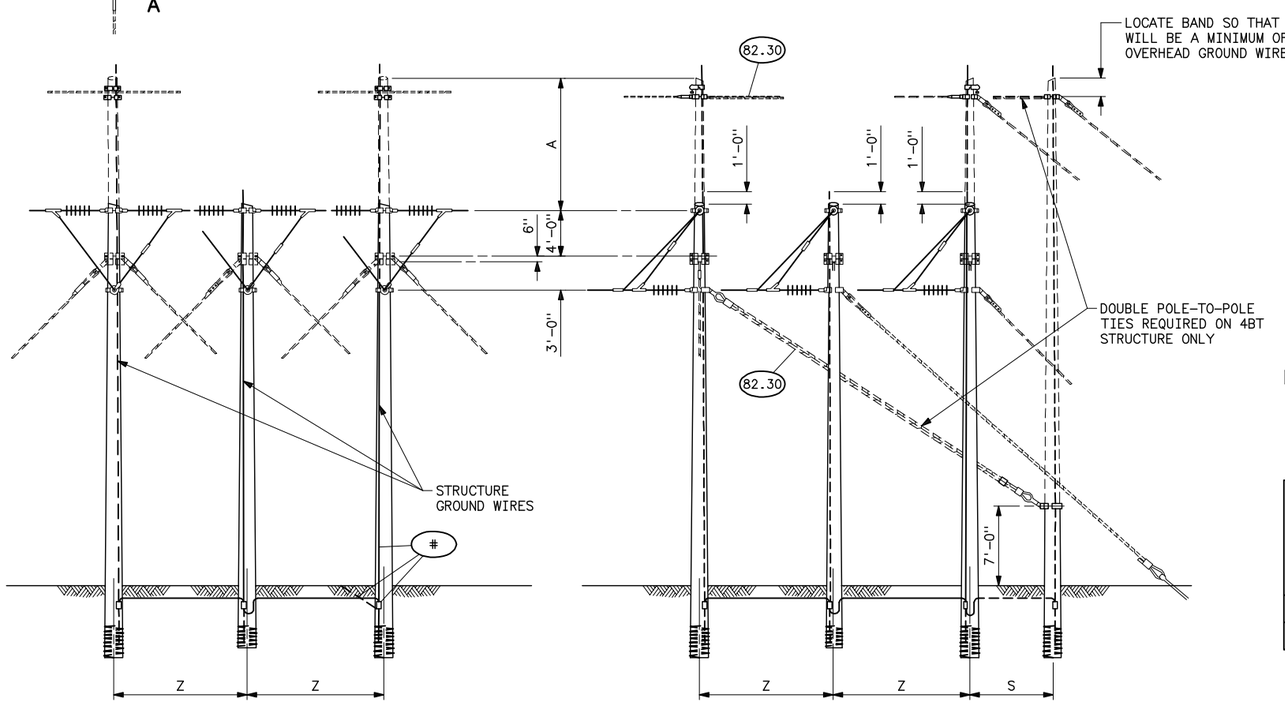

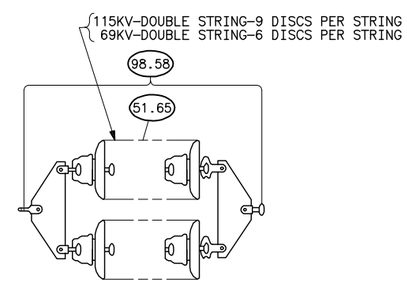

DETAIL OF DOUBLE INSULATOR STRING ASSEMBLY ≠

VOLTAGE	A			S	Z
	WITH OGW		WITHOUT OGW		
	30° PROTECTIVE ANGLE	39° PROTECTIVE ANGLE			
69KV	10'–0"	5'–6"	1'–0"	8'–0" MIN	12'–0"
115KV	10'–0"	5'–6"	1'–0"	8'–0" MIN	12'–0"

STRUCTURE MATERIAL

PART NO.	QUANTITY				DESCRIPTION	DWG NO. 41
	4BT WITH OGW		3BT WITHOUT OGW			
	69KV	115KV	69KV	115KV		
1	4	4	3	3	POLE	
9.23	6	6	6	6	BAND, FOUR–WAY STRAIN, TYPE B	6031
29.50	6	6	6	6	CLIP, GROUND WITH 3/4"x2 1/2" CONEHEAD BOLT	6030
58.06	9	9	9	9	LINK, CONNECTING PAIR	6031
64.23	6	6	6	6	LOCKNUT, FOR 3/4" BOLT	
77.27	12	12	12	12	LAG SCREW, 1/2"x4", FETTER DRIVE THREAD	
91.22	12	12	12	12	WASHER, ROUND FLAT, 1 3/8" OD, 9/16" HOLE	
#	GROUNDING MATERIAL, PART NUMBERS AND DESCRIPTION SHOWN ON 41 1012					

INSULATOR MATERIAL

PART NO.	SINGLE STRING		DOUBLE STRING ≠		DESCRIPTION	DWG NO. 41
	69KV	115KV	69KV	115KV		
27.51	6	6	6	6	CLAMP, PARALLEL GROOVE, 3–BOLT, FOR CONDUCTOR	
27.71 OR 35.11	9	9	9	9	CLAMP, STRAIN SOCKET FITTING, FOR CONDUCTOR	1002
					DEAD END, COMPRESSION TYPE WITH SOCKET FITTING, FOR CONDUCTOR	1002
38.10	9	9	–	–	CONNECTOR, BALL EYE	
51.65	54	81	108	162	INSULATORS, SUSPENSION TYPE, 10" DIAMETER, 5 3/4" SPACING	1002
98.58	–	–	18	18	DOUBLE YOKE ASSEMBLY, COMPLETE WITH FITTINGS	1004

OVERHEAD GROUND WIRE MATERIAL

PART NO.	QUANTITY	DESCRIPTION	DWG NO. 41
9.20	4	BAND, FOUR–WAY STRAIN	6030
9.38, 9.39, 9.40	2	BAND, POLE TOP	6034, 6035, 6036, 6037
27.30	6	CLAMP, GUY, 3–BOLT, 6" LONG	
27.86	2	CLAMP, SUSPENSION, WITH 2 1/4" LINK	
29.40	2	CLIP, GROUND, WITH 3/8"x1 1/2" CARRIAGE BOLT	6034, 6035, 6036, 6037
29.50	4	CLIP, GROUND, WITH 3/4"x2 1/2" CONEHEAD BOLT	6030
35.20	2	DEAD END, COMPRESSION TYPE	
58.11	2	LINK, CONNECTING, PAIR	6030
58.12	2	LINK, CONNECTING, PAIR	
58.13	2	LINK, CONNECTING, PAIR	
64.20	2	LOCKNUT, FOR 3/8" BOLT	
64.23	4	LOCKNUT, FOR 3/4" BOLT	
77.27	8	LAG SCREW, 1/2"x4", FETTER DRIVE THREAD	
79.10	2Δ	SHACKLE, ANCHOR TYPE	6034, 6036, OR 6037
82.30	170 FT	STEEL STRAND, 7–WIRE, 7/16" SIEMENS–MARTIN (POLE–TO–POLE TIES)	
91.22	8	WASHER, ROUND, FLAT, 1 3/8" OD, 9/16" HOLE	
93.10	6	SHEAVE WHEEL, FOR 7/16" SIEMENS–MARTIN STRAND	6030
75.42	2 SETS	ROD, ARMOR, PREFORMED	

NOTES

1. USE TWO LAG SCREWS AND WASHERS FOR EACH FOUR–WAY STRAIN BAND.
2. Δ ANCHOR TYPE SHACKLE AND 2 1/4" LINK NOT REQUIRED WHEN TYPE B POLE TOP BAND, DWG NO 41 6035 IS USED.
3. ≠ USE ONLY WHEN SPECIFIED.

REFERENCE DRAWINGS

GROUNDING DETAILS _____ 41 1012
GUY ARRANGEMENT _____ 41 6095

B	3–2–11 A7–DDD	REDRAWN.

SUPERSEDES DWG NO. 40–D–4814

UNITED STATES DEPARTMENT OF ENERGY
WESTERN AREA POWER ADMINISTRATION
CORPORATE SERVICES OFFICE – LAKEWOOD, COLORADO

STANDARD DESIGNS
TRANSMISSION LINES
TYPE 3BT/4BT 69 AND 115KV
BRANCH LINE STRUCTURE

DESIGNED BUREC _____ APPROVED BUREC _____

A	MARCH 20, 1991	41	6109

Plotted By: seela Apr 26, 2011– 8:30am
PWD: S:\Projects\Misc\StandardDrawings\DesignDrawings\xDwgsReadyForFinal\Scripts\41_6109b.dwg Last Saved By: Debbie Denton on 3/2/2011 2:58 PM

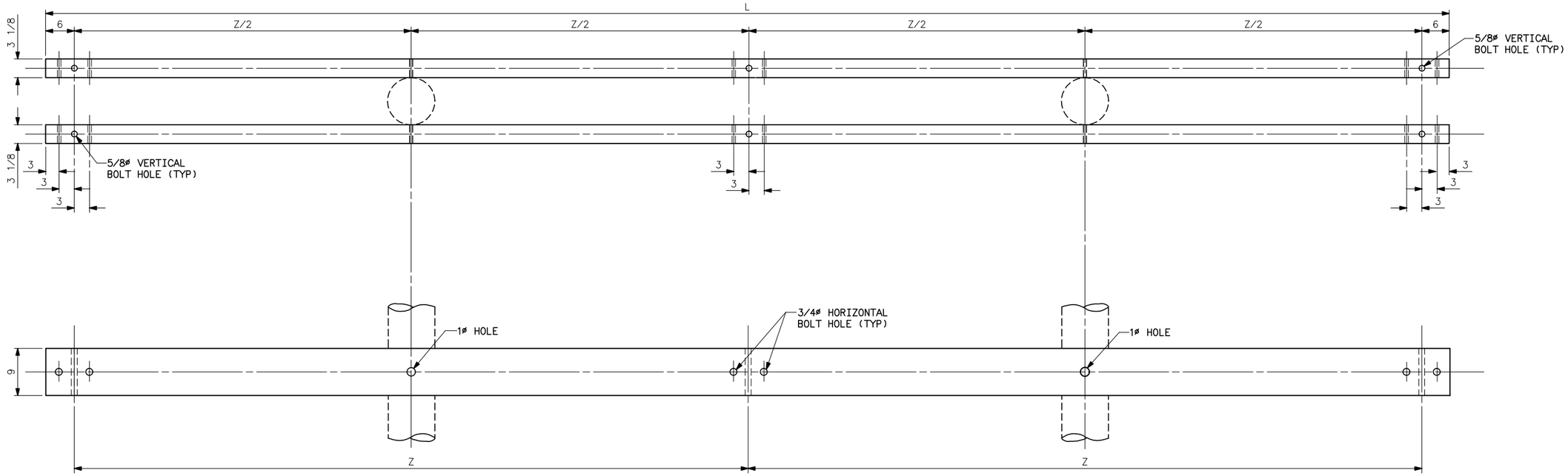

CROSSARM DRILLING DETAILS

NOTES

1. CROSSARMS SHALL BE GLUED LAMINATED.
2. ALL HOLES IN WOOD SHALL BE BORED 1/8 INCH LARGER THAN THEIR RESPECTIVE BOLT DIAMETERS

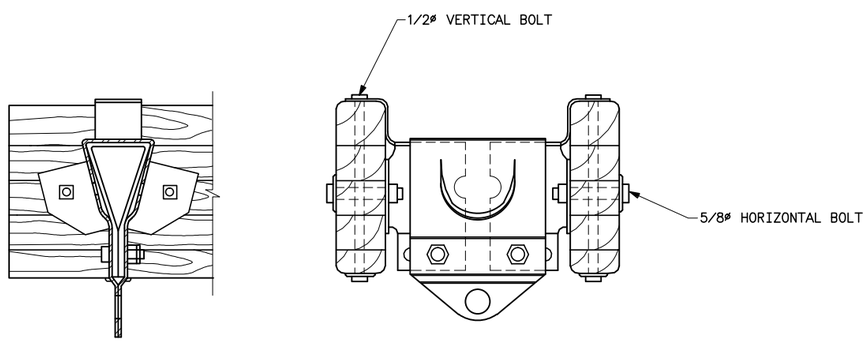

DETAIL OF ADJUSTABLE SPACER FITTING

VOLTAGE	STRUCTURE TYPE	L	Z	Z/2	HUGHES BROS. SPACER FITTING (OR EQUAL) PART NO.
69KV	HS-1	21-0	10-0	5-0	3414.2
69KV	HSB-1	25-0	12-0	6-0	3414.2
115KV	HS-1 AND HSB-1	25-0	12-0	6-0	3414.2
138KV	HS-1 AND HSB-1	29-0	14-0	7-0	3415.13
161KV	HS-1 AND HSB-1	35-0	17-0	8-6	3415.13
230KV	HSB-1	45-0	22-0	11-0	3415.13

UNITED STATES DEPARTMENT OF ENERGY
WESTERN AREA POWER ADMINISTRATION
CORPORATE SERVICES OFFICE – GOLDEN, COLORADO

STANDARD DESIGNS
TRANSMISSION LINES
CROSSARM DRILLING DETAILS
HS-1 AND HSB-1 STRUCTURES
WITH ADJUSTABLE SPACER FITTINGS

DESIGNED KAREN ROWE APPROVED DOUG HANSON
CIVIL ENGINEERING MANAGER

CAD	AUGUST 30, 1996	41	6113

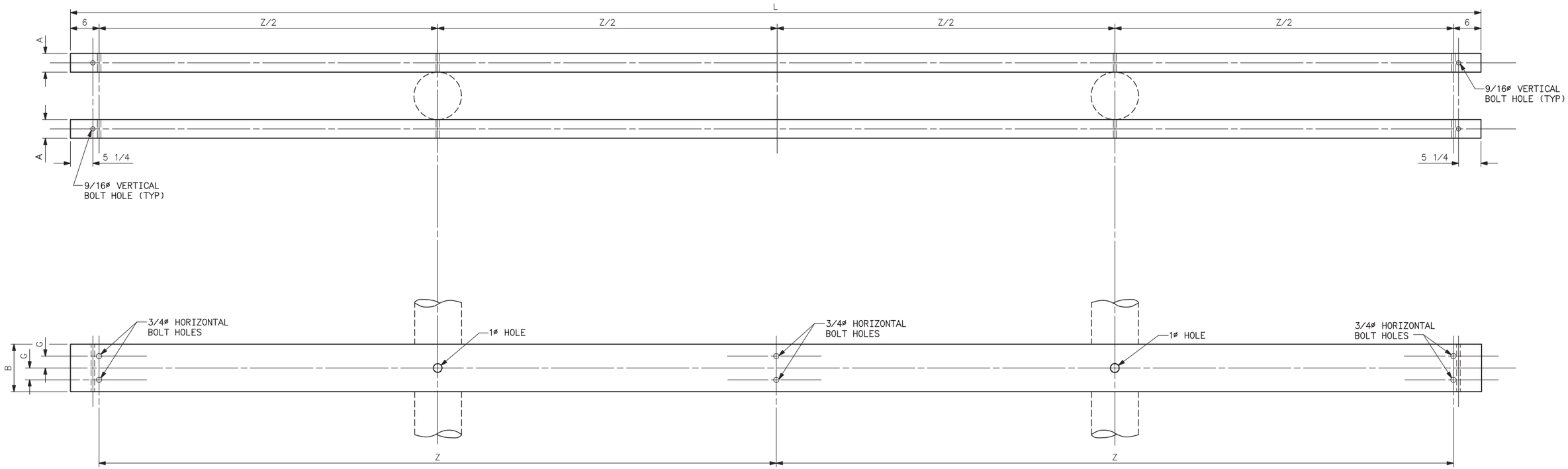

CROSSARM DRILLING DETAILS

NOTES

1. CROSSARMS SHALL BE GLUED LAMINATED.
2. THESE CROSSARMS SHALL BE USED ON EXISTING STRUCTURES WITH FIXED SPACER FITTINGS ONLY. ALL NEW STRUCTURES SHOULD USE STANDARD CROSSARM SIZES AND DETAILS SHOWN ON STANDARD DRAWING NUMBER 41 6113.

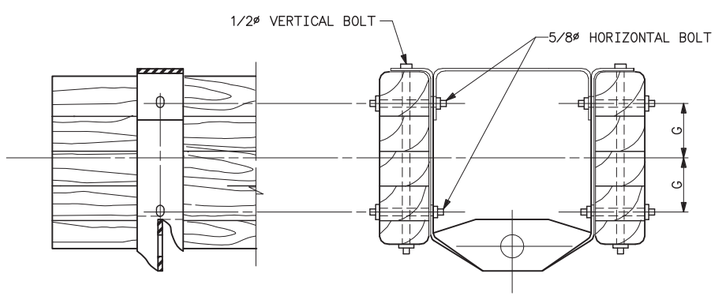

DETAIL OF FIXED SPACER FITTING

(STANDARD DESIGN PART NO. 40.49-40.68)

VOLTAGE	STRUCTURE TYPE	L	A	B	Z	Z/2	G	STANDARD DESIGN PART NO.	REFERENCE DRAWING NO.
69KV	HS	21-0	2 5/8	9 1/2	10-0	5-0	3 IN.	40.49-40.52	41 6038
69KV	HSB	25-0	2 5/8	9 1/2	12-0	6-0	3 IN.	40.49-40.52	41 6038
115KV	HS AND HSB	25-0	2 5/8	9 1/2	12-0	6-0	3 IN.	40.49-40.52	41 6038
138KV	HS AND HSB	29-0	3 5/8	11 1/2	14-0	7-0	3 3/4 IN.	40.53-40.56 40.60,40.61	41 6039
161KV	HS AND HSB	35-0	3 5/8	11 1/2	17-0	8-6	3 3/4 IN.	40.53-40.56 40.60,40.61	41 6039
230KV	HSB	45-0	3 1/8	9	22-0	11-0	2 1/2 IN.	40.66-40.68	41 6040

A	09-13-01 A7-KKR	ADDED NOTE 2. DELETED "-1" FROM TYPES.

SUPERSEDES DWG NO. 41 6023, 41 6025, 41 6027

UNITED STATES DEPARTMENT OF ENERGY
WESTERN AREA POWER ADMINISTRATION
HEADQUARTERS - GOLDEN, COLORADO

STANDARD DESIGNS
TRANSMISSION LINES
CROSSARM DRILLING DETAILS
HS AND HSB STRUCTURES
WITH FIXED SPACER FITTINGS

DESIGNED K.K.ROWE
DRAWN K.K.ROWE
CHECKED K.K.ROWE
RECOMMENDED K.K.ROWE
APPROVED ROSS M. CLARK
CHIEF, TRANSMISSION LINE BRANCH

CAF	APRIL 18, 1995	41	6114

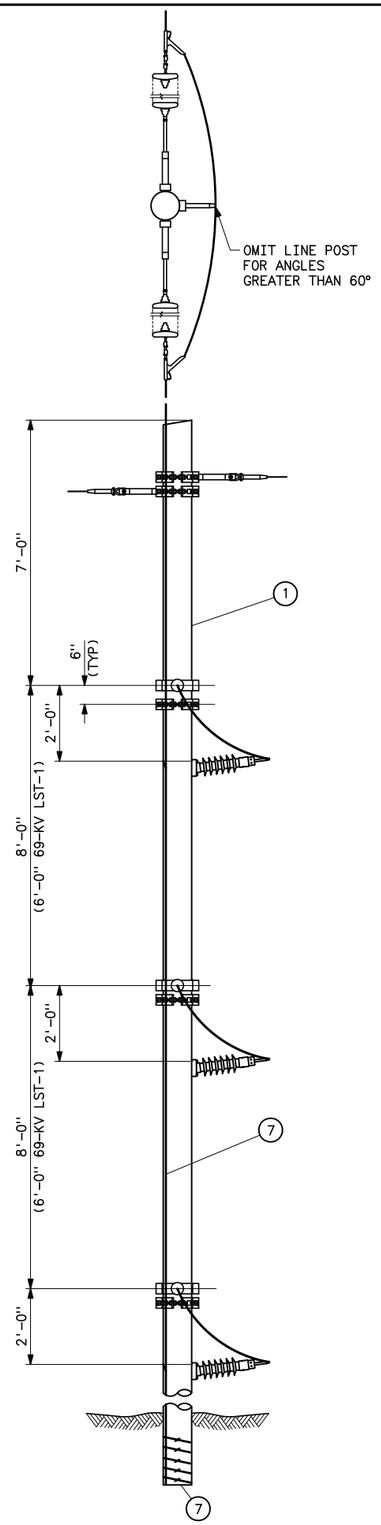

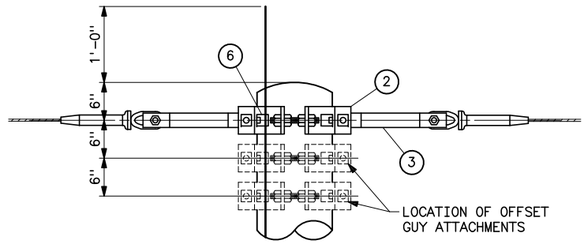

TANGENT TENSION ASSEMBLY (0°-3°)
FOR OVERHEAD GROUND WIRE

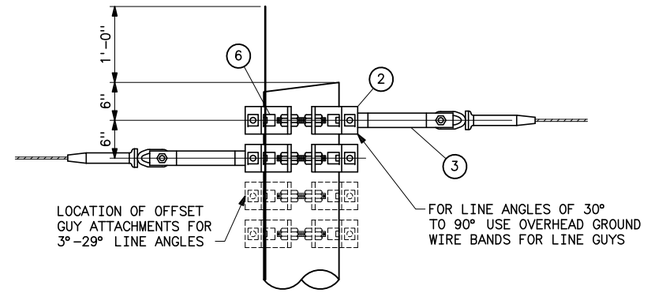

ANGLE TENSION ASSEMBLY (4°-90°)
FOR OVERHEAD GROUND WIRE

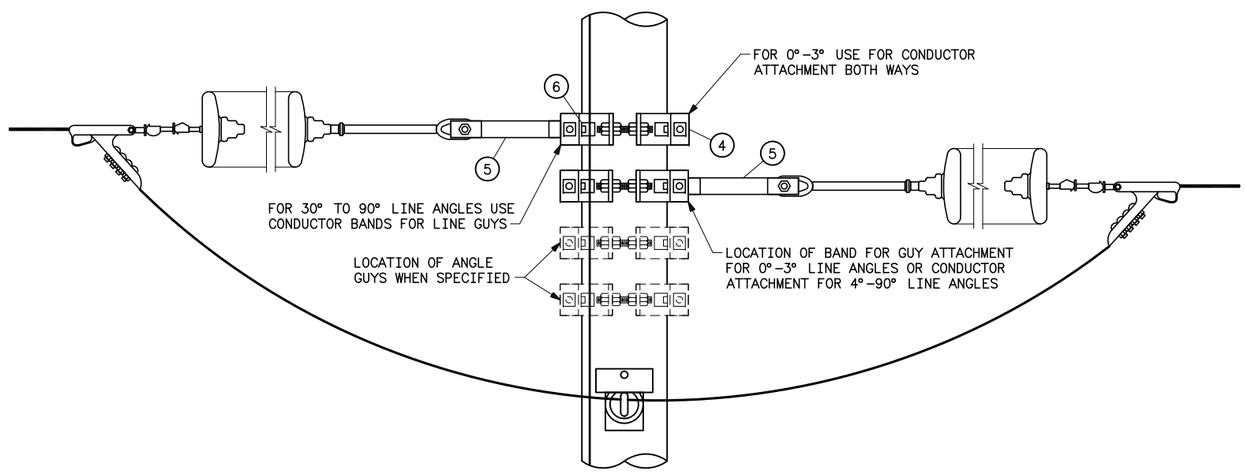

DETAIL OF INSULATOR ATTACHMENT
FOR CONDUCTOR

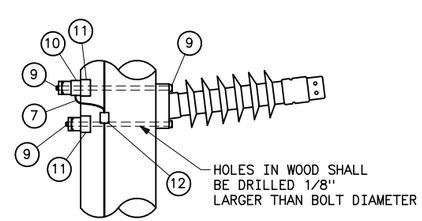

POST INSULATOR ASSEMBLY

STRUCTURE MATERIAL

PART NO.	QUANTITY STRUCTURE TYPE ST-1 AND LST-1		DESCRIPTION
	TANGENT TENSION	ANGLE TENSION	
1	1	1	POLE, SEE STRUCTURE LIST FOR HEIGHT
2	1	2	FOUR-WAY STRAIN BAND; HUGHES 3105 SERIES, OR APPROVED EQUAL WITH 2-1/2x4 LAG SCREWS & WASHERS PER BAND
3	2	2	CONNECTING LINK; PAIR WITH BNK HUGHES 3154, OR APPROVED EQUAL
4	3	6	FOUR-WAY STRAIN BAND: HUGHES 3112 SERIES OR APPROVED EQUAL
5	6	6	CONNECTING LINK; PAIR WITH BNK HUGHES 3157, OR APPROVED EQUAL
6	4	8	1/2ø GROUNDING CLIP ASSEMBLY (INCLUDES BONDING CLIP, CARRIAGE BOLT, NUT AND LOCKNUT) HUGHES 2718.55 OR EQUAL
7	AS REQ'D	AS REQ'D	NO. 2 AWG 30% CONDUCTIVITY, COPPER CLAD WIRE ATTACHED WITH 2" STAPLES
8	1	1	POLE BOTTOM PLATE (BLACKBURN NO. GP 110 OR EQUAL) ATTACHED TO POLE
9	-	-	MACHINE BOLT WITH NUT AND LOCKNUT (SUPPLIED WITH INSULATOR BRACKET)
10	3	3	BONDING CLIP (EQUAL TO BROOKS MANUFACTURER BC SERIES OR HUGHES NO. 2727) WITH NUT
11	6	6	3x3x1/4 CURVED SQUARE WASHER WITH BOLT HOLE
12	3	3	PARALLEL GROOVE CLAMP, 2-BOLT COPPER ALLOY

NOTES

1. POLES SHALL BE GIVEN RAKE OF 1/4" FOR EACH FOOT OF POLE LENGTH AGAINST THE STRAIN FOR LINE ANGLES GREATER THAN 5°.
2. BNK INDICATES BOLT, NUT, AND STAINLESS STEEL COTTER KEY REQUIRED.
3. ALL POLE BANDS SHALL BE BONDED WITH PART NUMBER 5.
4. EXTRA BANDS, LINKS. GROUNDING ASSEMBLIES, AND LAG SCREWS NEEDED FOR GUYING ARE NOT INCLUDED IN THIS QUANTITY.
5. HOLES IN WOOD SHALL BE DRILLED 1/8" LARGER THAN BOLT DIAMETER.
6. MEASUREMENTS FOR HORIZONTAL LINE POST MOUNTING ARE TO CENTERLINE OF TOP MOUNTING BOLT.
7. ALL HARDWARE WILL BE OF THE SIZE RECOMMENDED BY THE INSULATOR MANUFACTURER.
8. DEAD END TEES MAY BE USED IN LIEU OF POLE BANDS. CONNECTING LINKS, SHEAVE WHEELS AND GROUNDING CLIP ASSEMBLIES ARE NOT REQUIRED WITH DEAD END TEES, SEE STANDARD DRAWING 41 6138.

REFERENCE DRAWINGS

GUY ASSEMBLIES AND DETAILS_____41 6047
GUYING REQUIREMENTS FOR SINGLE POLE
CONSTRUCTION WITH OVERHEAD GROUND WIRE___41 6071
WOOD POLE STRUCTURES
GROUNDING DETAILS_____41 1012
WOOD POLE STRUCTURES
OVERHEAD GROUND WIRE ASSEMBLY_____41 1019
TENSION INSULATOR ASSEMBLIES -
SINGLE STRING_____41 1022
TENSION INSULATOR ASSEMBLIES -
DOUBLE STRING_____41 1023
HORIZONTAL POST - INSULATOR ASSEMBLIES____41 1024
OPTICAL GROUND WIRE ASSEMBLIES_____41 1031

B	10-17-05 A7-KKR	ADDED LST-1 AND DRAWING REFERENCES.
A	01-25-05 A7-KKR	MINOR REVISIONS.

UNITED STATES DEPARTMENT OF ENERGY
WESTERN AREA POWER ADMINISTRATION
CORPORATE SERVICES OFFICE - GOLDEN, COLORADO

STANDARD DESIGNS
TRANSMISSION LINES
TYPE ST-1 AND LST-1 69 AND 115KV
TANGENT AND ANGLE TENSION STRUCTURES

DESIGNED KAREN ROWE APPROVED DOUG HANSON
CIVIL ENGINEERING MANAGER

A	AUGUST 30, 1996	41	6116

Plotted By: lampman Dec 22, 2009- 1:56pm
TLWCS:
C:\Program Files\WapaSoftware\autolisp\plotstamp.dwg Last Saved By: Debra Denton on 4/5/2007 12:35 PM

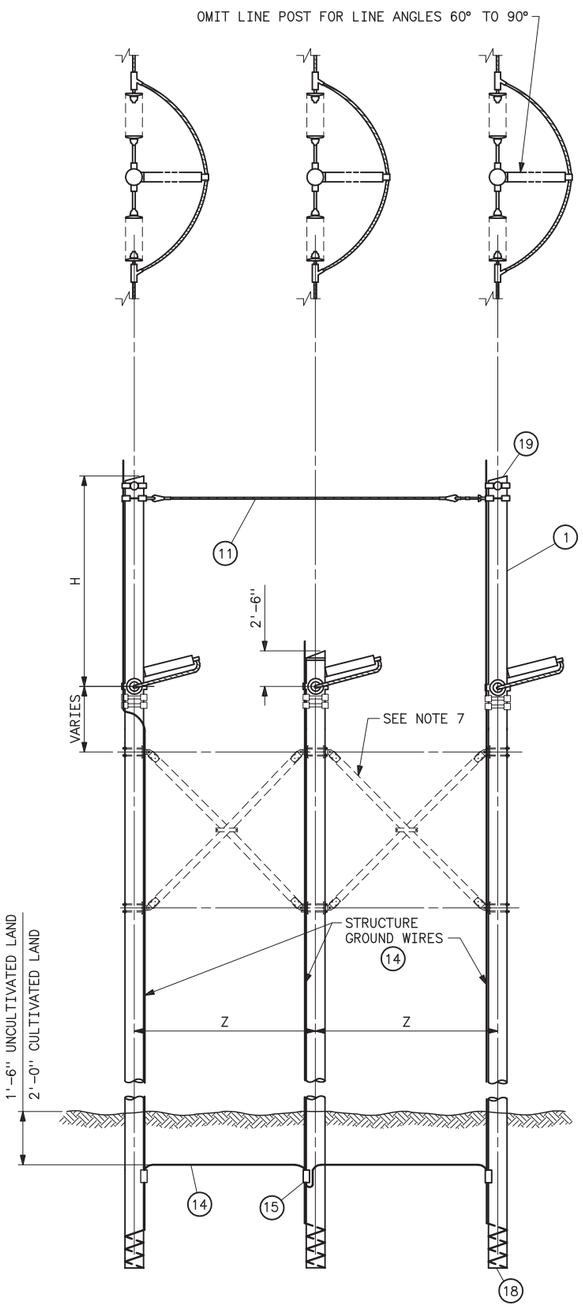

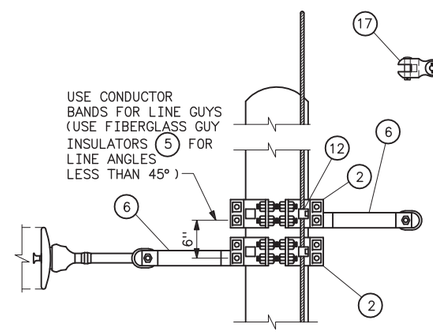

DETAIL OF INSULATOR ATTACHMENT
(FOR LINE ANGLES 5° TO 90°)

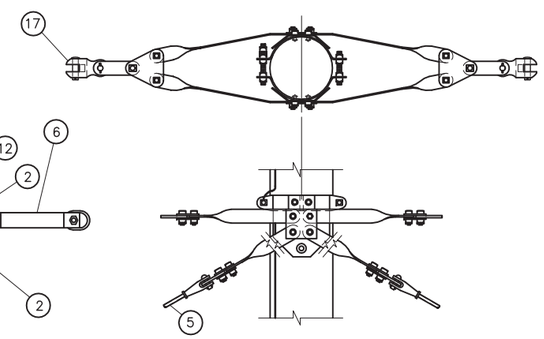

DETAIL OF INSULATOR ATTACHMENT 4
(FOR LINE ANGLES 0°-5°)

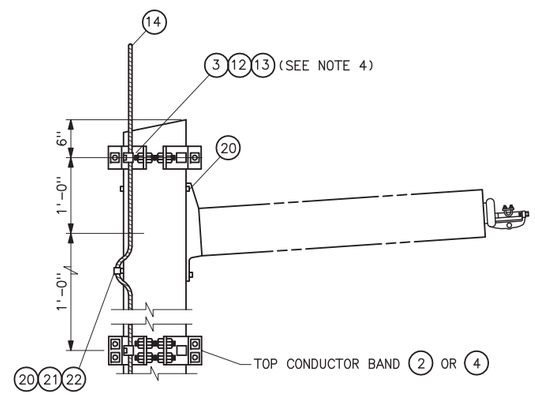

POST INSULATOR ASSEMBLY

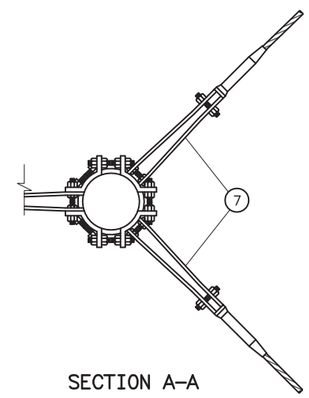

SECTION A-A

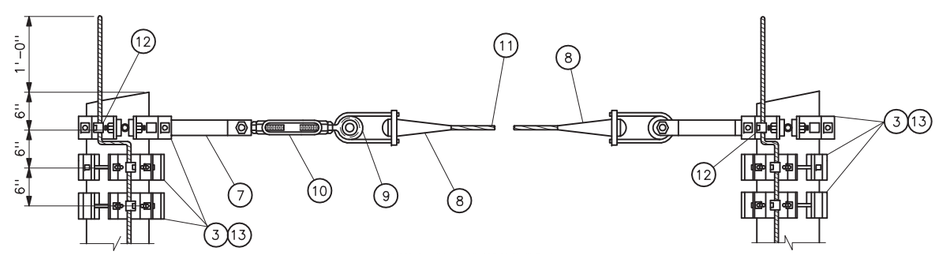

OGW ATTACHMENT
(TANGENT TENSION 0°-5°)

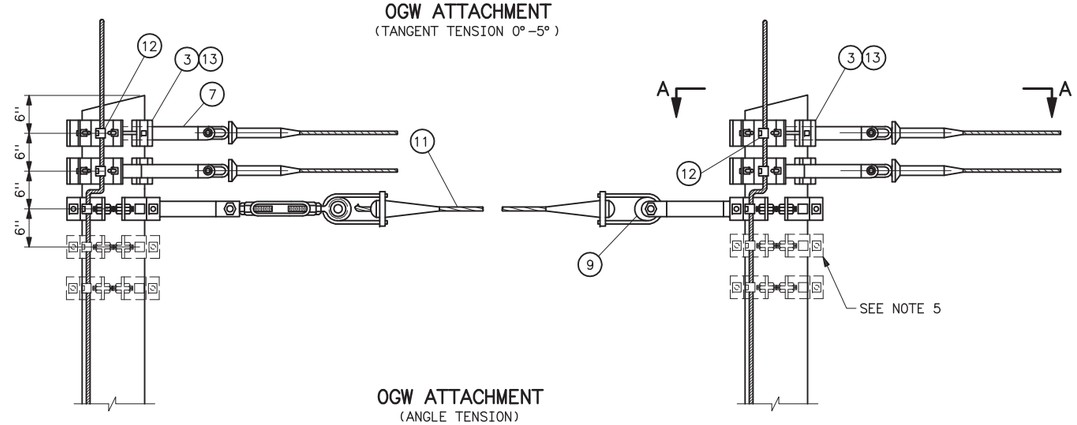

OGW ATTACHMENT
(ANGLE TENSION)

VOLTAGE	Z				H	
	ANGLE TURNED IN DEGREES					
	0°-30°	30°-45°	45°-60°	60°-90°	0°-60°	60°-90°
115KV	15'-0"	21'-0"	27'-0"	35'-0"	16'-0"	14'-0"
69KV	14'-0"	19'-0"	25'-0"	33'-0"	16'-0"	14'-0"

STRUCTURE MATERIAL

PART NO.	ANGLE 0°-5°	ANGLE 5°-30°	ANGLE 30°-60°	ANGLE 60°-90°	DESCRIPTION
1	3	3	3	3	POLE, SEE STRUCTURE LIST FOR LENGTH
2	———	6	6	6	FOUR-WAY STRAIN POLE BAND; HUGHES 3112 SERIES,JOSLYN J25969 SERIES; OR, APPROVED EQUAL (SEE NOTE 6)
3	7	11	7	6	FOUR-WAY STRAIN POLE BAND; HUGHES 3103 SERIES, JOSLYN J25967 SERIES; OR, APPROVED EQUAL (SEE NOTE 6)
4	3	———	———	———	POLE BAND ASSEMBLY, HUGHES B1784-VV OR APPROVED EQUAL (SEE NOTE 6)
5	6	6	6	———	FIBERGLASS GUY INSULATOR, 10 FT LENGTH
6	———	6	6	6	CONNECTING LINK; PAIR W/BNK HUGHES 3157, JOSLYN J26035; OR, APPROVED EQUAL
7	6	6	6	6	CONNECTING LINK PAIR W/BNK; HUGHES 3154; JOSLYN J6650; OR, APPROVED EQUAL CONNECTING LINK WITH BNK
8	2	2	2	2	DEAD-END AUTOMATIC VISE TYPE FOR GUY STRAND
9	2	2	2	2	SHEAVE WHEEL, 2 1/2 DIA MINIMUM
10	1	1	1	1	TURNBUCKLE, CLEVIS-EYE, 7/8x12
11	AS REQD	AS REQD	AS REQD	AS REQD	STEEL STRAND 7/16", 7-WIRE, HIGH STRENGTH
12	7	17	13	12	1/2ø GROUNDING CLIP ASSEMBLY (INCLUDES BONDING CLIP, CARRIAGE BOLT, NUT AND LOCKNUT). HUGHES 2718.55 OR EQUAL
13	14	22	14	12	LAG SCREWS, 1/2x4 WITH FLAT WASHERS (2 EACH PER BAND)
14	AS REQD	AS REQD	AS REQD	AS REQD	NO. 2 AWG 30% CONDUCTIVITY, COPPER CLAD WIRE ATTACHED WITH 2-INCH STAPLES
15	3	3	3	3	PARALLEL GROOVE CLAMP, 2-BOLT COPPER ALLOY
17	6	———	———	———	CLEVIS-CLEVIS 90° W/BNK, 40,000 LBS
18	3	3	3	3	POLE BOTTOM PLATE (BLACKBURN NO. GP 110 OR EQUAL) ATTACHED TO POLE
19	3	3	3	3	POLE ANTISPLITTING DEVICE EQUAL TO STAR-LOCK MANUFACTURED BY THE BAYNE COMPANY

POST INSULATOR ASSEMBLY MATERIAL
(OMIT FOR 60° TO 90° ANGLES)

PART NO.	QUANTITY 0°-60°	DESCRIPTION
20	6	7/8"ø x REQD LENGTH MACHINE BOLT WITH LOCKNUT AND LOCK WASHER
21	6	4x4x1/4 CURVED SQUARE WASHER WITH 15/16"ø HOLE
22	3	BONDING CLIP (EQUAL TO BROOKS MANU BC SERIES OR HUGHES BROS NO. 2727)

NOTES

1. FITTINGS SHALL INCLUDE BOLTS, NUTS, AND WASHERS.
2. ALL HOLES SHALL BE BORED 1/8 INCH LARGER IN WOOD POLE THAN THEIR RESPECTIVE BOLT DIAMETERS.
3. MATERIAL REQUIRED WHERE HORIZONTAL LINE POST INSULATORS ARE USED ARE BASED ON BOLT SIZES SHOWN. INSULATOR MAY REQUIRE BOLTS, LOCKNUTS, AND WASHERS OF DIFFERENT SIZES.
4. ADDITIONAL POLE BAND IS NOT REQUIRED ON CENTER POLE FOR LINE ANGLES 60°-90°.
5. FOR 5°-30° LINE ANGLES ADD TWO ADDITIONAL BANDS (PART 3) FOR GUYING ON EACH OUTSIDE POLE.
6. DEADEND TEES MAY BE USED IN LIEU OF POLE BANDS. CONNECTING LINKS, SHEAVE WHEELS AND GROUNDING CLIP ASSEMBLIES ARE NOT REQUIRED WITH DEADEND TEES. SEE STANDARD DRAWING 41 6138.
7. USE X-BRACE EQUAL TO HUGHES BROS NO. 2121 WHEN SPECIFIED.

REFERENCE DRAWINGS

TYPE 3TA-1 AND STRUCTURES
STANDARD GUY STRUCTURES_____41 6125
TENSION INSULATOR ASSEMBLIES
SINGLE STRING_____41 1022
DOUBLE STRING_____41 1023
WOOD POLE STRUCTURES
GROUNDING DETAIL_____41 1012
OVERHEAD GROUND WIRE ASSEMBLY
DETAILS FOR WOOD POLES STRUCTURES_____41 1019
OPTICAL GROUND WIRE ASSEMBLIES_____41 1031
TYPICAL DETAILS FOR DEAD END TEES_____41 6138

B	5-8-06 A7-KKR	ADDED X-BRACE OPTION
A	01-06-05 A7-KKR	REVISED REFERENCE DRAWINGS. ADDED STAR-LOCK AND NOTE 6.

UNITED STATES DEPARTMENT OF ENERGY
WESTERN AREA POWER ADMINISTRATION
CORPORATE SERVICES OFFICE - LAKEWOOD, COLORADO

STANDARD DESIGNS
TRANSMISSION LINES
TYPE 3TA-1 69 AND 115KV
3-POLE TENSION STRUCTURE

DESIGNED KAREN ROWE APPROVED DOUG HANSON
CIVIL ENGINEERING MANAGER

CAE	DECEMBER 31, 1996	41	6118

Jul 12, 2006- 11:54am Plotted By:seela IMAGES:
S:\Projects\StandardDrawings\DesignDrawings\Civil\X41-6118b.dwg Last Saved By: TAS on May 08, 2006- 1:01pm

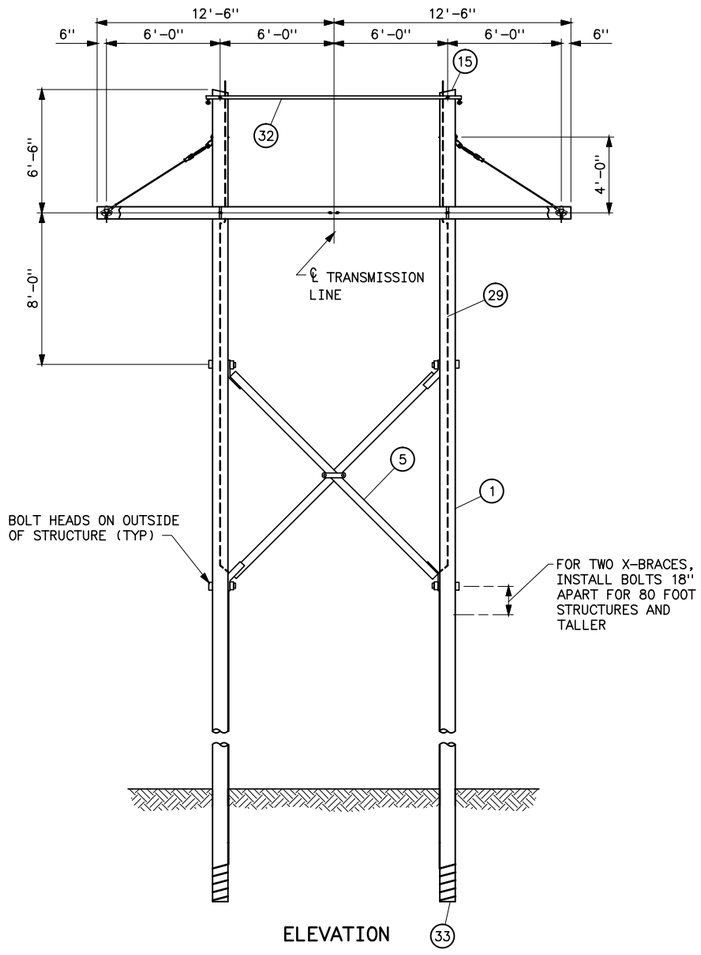

ELEVATION

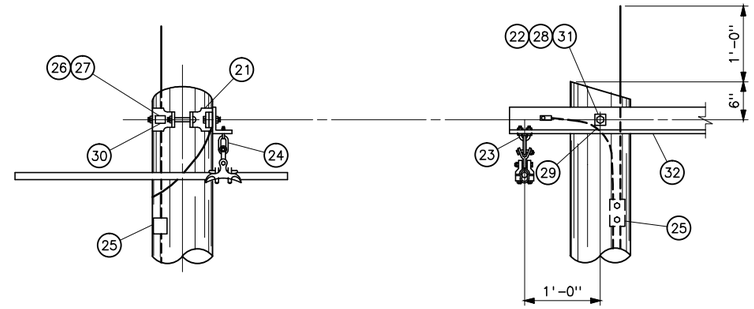

DETAIL OF OVERHEAD GROUND WIRE SUSPENSION ATTACHMENT

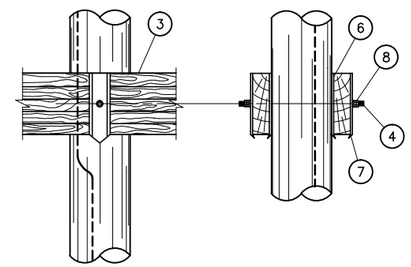

DETAIL OF WOOD ATTACHMENT

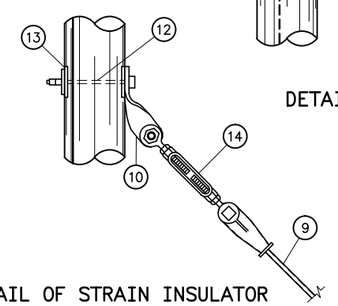

DETAIL OF STRAIN INSULATOR ATTACHMENT TO POLE

STRUCTURE MATERIAL

PART NO.	QUANTITY	DESCRIPTION
1	2	POLE, SEE STRUCTURE LIST FOR HEIGHT
2	3	ADJUSTABLE SPACER FITTINGS COMPLETE WITH BOLTS, NUTS, & WASHERS (HUGHES BROS. TYPE 3414.2 OR EQUAL) (SEE NOTE 4)
3	2	GLUED LAMINATED WOOD CROSSARM, 3 1/8"x9"x25'-0"
4	2	DOUBLE ARMING BOLT, 7/8"ø x REQD LENGTH WUTH 4 NUTS, USE EXTRA NUTS AS LOCKNUTS
5	1	X-BRACE, COMPLETE WITH FITTINGS, 3 3/8"x4 3/8" (HUGHES BROS. NO. 1042 OR EQUAL)
6	4	FLAT GAIN PLATE
7	4	RIBBED TIE PLATE
8	4	SPRING LOCK WASHER FOR 7/8"ø BOLT
9	2	CLEVIS-CLEVIS FIBERGLASS GUY STRAIN, 25,000 LB MINIMUM ULTIMATE STRENGTH COMPLETE WITH BNK
10	4	TWISTED CLIP (EQUAL TO HUGHES BROS NO. AS2276)
11	2	7/8"ø x REQD LENGTH BENT BOLT WITH LOCK WASHERS AND LOCKNUTS
12	2	7/8"ø x REQD LENGTH BOLT WITH LOCK WASHER AND LOCKNUT
13	2	4"x4"x1/4" CURVED WASHER, 15/16"ø HOLE
14	2	TURNBUCKLE (HUGHES BROS NO. AS2545-B OR EQUAL)
15	2	POLE ANTISPLITTING DEVICE EQUAL TO STAR-LOCK MANUFACTURED BY THE BAYNE COMPANY

OVERHEAD GROUND WIRE AND GROUNDING MATERIAL

PART NO.	QUANTITY	DESCRIPTION
21	2	POLE TOP BAND (HUGHES BROS. NO. 2845-B OR EQUAL)
22	2	MACHINE BOLT, 7/8"ø x 1'-0"
23	2	"U" BOLT, 5/8"ø x 3" WITH 4 HEX NUTS AND 2 LOCKNUTS
24	2	CHAIN LINK 1/2"ø (HUGHES BROS NO. 1329-B1 OR EQUAL)
25	2	PARALLEL GROOVE CLAMP, 2-BOLT COPPER ALLOY OR COPPER CRIMPIT (BURNDY TYPE YC-C OR EQUAL)
26	2	1/2"ø x 4" LAG SCREW WITH FETTER DRIVE THREAD (ONE PER BAND)
27	2	1 3/8"ø FLAT ROUND WASHER WITH 9/16"ø HOLE (ONE PER BAND)
28	2	LOCKNUT FOR 7/8"ø BOLT
29	AS REQUIRED	NO. 2 AWG 30% CONDUCTIVITY, COPPER CLAD WIRE ATTACHED WITH 2" STAPLES
30	4	1/2"ø GROUNDING CLIP ASSEMBLY (INCLUDES BONDING CLIP, CARRIAGE BOLT, NUT AND LOCKNUT).
31	2	SPRING LOCK WASHER FOR 7/8"ø BOLT
32	1	STEEL ANGLE, 4"x3 1/2"x5/16"x 14'-6" LONG
33	2	POLE BOTTOM PLATE (BLACKBURN NO. GP 110 OR EQUAL) ATTACHED TO POLE

NOTES

1. STEEL FOR STEEL ANGLES AND FOR BENT PLATES SHALL CONFORM TO ASTM A36. PIECES SHALL BE GALVANIZED AFTER FABRICATION IN ACCORDANCE WITH ASTM A123.
2. ALL HOLES IN WOOD SHALL BE BORED 1/8" LARGER THAN THEIR RESPECTIVE BOLT DIAMETERS.
3. GAINING IS NOT REQUIRED IF ADJUSTABLE SPACER FITTING IS USED.
4. HOLE IN PLATE SHALL BE UNTAPPED AND MEASURE 1/16" LARGER THAN BOLT. ADD EXTRA LOCKNUT AND SPRING WASHER FOR EACH CONNECTION.
5. BNK INDICATES BOLT, NUT, AND STAINLESS STEEL COTTER KEY REQUIRED.

REFERENCE DRAWINGS

WOOD POLES STRUCTURES
GROUNDING DETAILS 41 1012
OVERHEAD GROUND WIRE ASSEMBLY
DETAILS FOR WOOD POLES STRUCTURES 41 1019
CROSSARM DRILLING DETAILS HS-1 AND
HSB-1 STRUCTURES 41 6113
OPTICAL GROUNDWIRE ASSEMBLIES 41 1031
SUSPENSION INSULATOR ASSEMBLIES
SINGLE STRING 41 1020

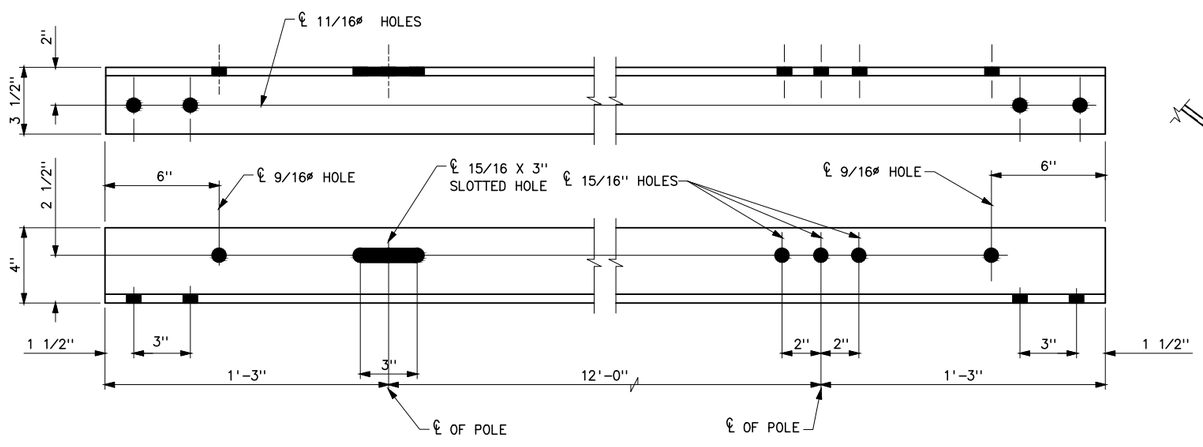

STEEL ANGLE (32)

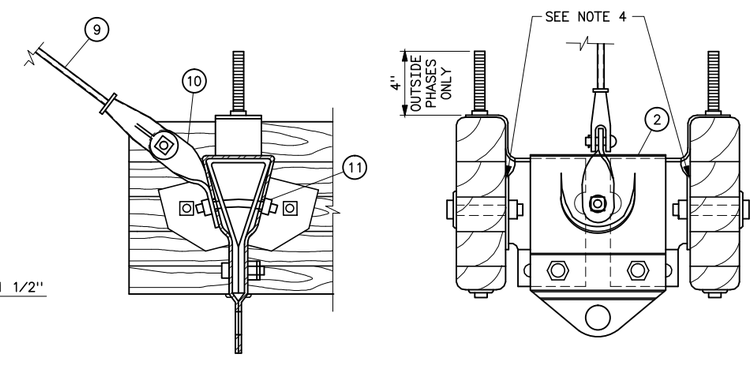

DETAIL OF PHASE FITTING ASSEMBLY

B	3-6-06 A7-KKR	MINOR REVISIONS
A	01-06-05 A7-KKR	MINOR CHANGES. ADDED STAR-LOCK.

UNITED STATES DEPARTMENT OF ENERGY
WESTERN AREA POWER ADMINISTRATION
CORPORATE SERVICES OFFICE - LAKEWOOD, COLORADO

STANDARD DESIGNS
TRANSMISSION LINES
TYPE HS-1 115KV
SUSPENSION STRUCTURE

DESIGNED KAREN ROWE APPROVED DOUG HANSON
CIVIL ENGINEERING MANAGER

CAE	AUGUST 30, 1996	41	6122

Sep 28, 2010- 9:19am Plotted By:denton IMAGES:
S:\Projects\Standard\Drawings\Design\Drawings\Civil\41-6122b.dwg Last Saved By: Cox on Mar 07, 2006- 9:40am

GUY AND ANCHOR REFERENCE CHART			
LINE GUYING			
CONDUCTOR GUYS	OGW GUYS	ANCHOR REF	NO. OF ANCHORS
3LSGEW	2LSGEW	A C	10
3LSGEW	2LDGEW	A C	10
3LDGEW	2LSGEW	A C	10
3LDGEW	2LDGEW	A C	10
3LSGEW–3LDGEW	2LDGEW	A B C	16
6LDGEW	2LDGEW	A B C	16

OGW — OVERHEAD GROUND WIRE
COND — CONDUCTOR
LSGEW — LINE SINGLE GUY EACH WAY
LDGEW — LINE DOUBLE GUY EACH WAY
⟶ — OGW AND CONDUCTOR
◯ — ANCHOR IDENTIFICATION REFERENCE

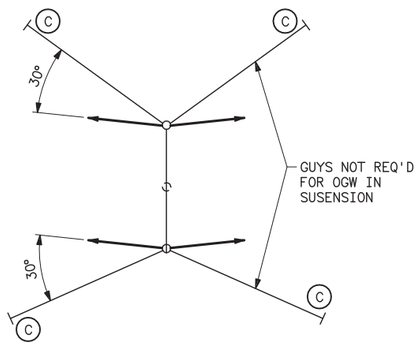

SECTION A–A

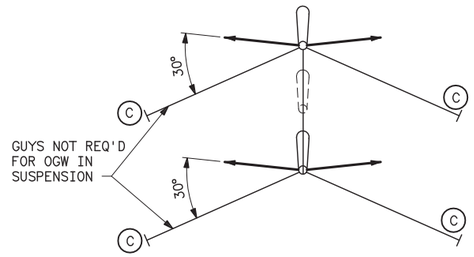

SECTION C–C

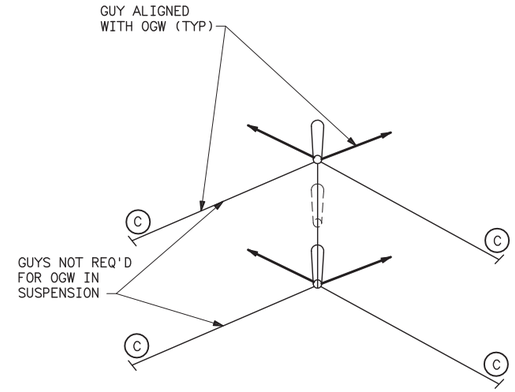

SECTION E–E

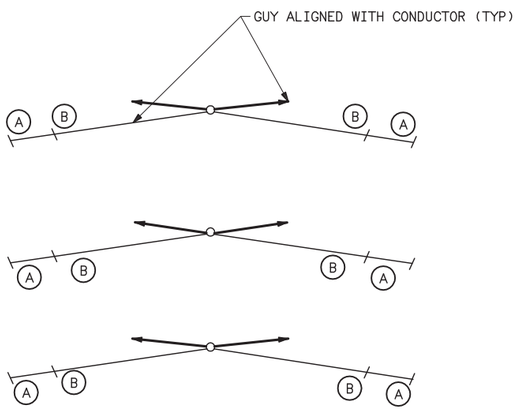

SECTION B–B

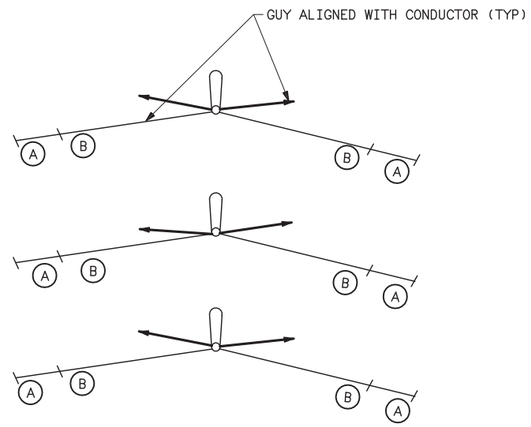

SECTION D–D

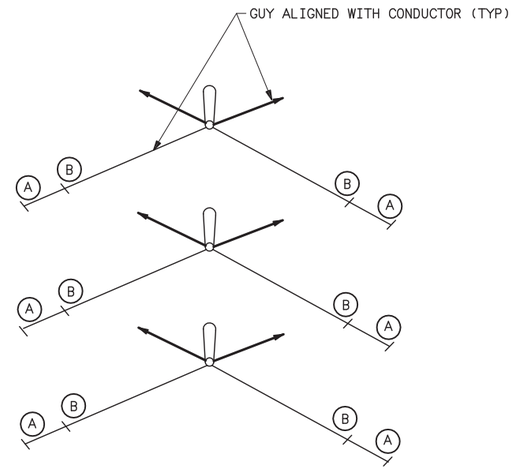

SECTION F–F

NOTES

1. RAKE POLES AS FOLLOWS:
   OGW: SUSPENSION 5°–60°
   OGW: TENSION 10°–90°
2. POLE RAKE SHALL BE 1/4–INCH FOR EACH FOOT OF POLE ABOVE GROUND. RAKE SHALL BE AGAINST THE STRAIN.
3. REFER TO DRAWING NO. 41 6047 FOR ANCHOR SPACING.
4. REFER TO PLAN AND PROFILE DRAWINGS FOR ACTUAL GUY QUANTITIES AND TYPES AT EACH SITE.

REFERENCE DRAWING

GUY ASSEMBLIES AND DETAILS _____ 41 6047

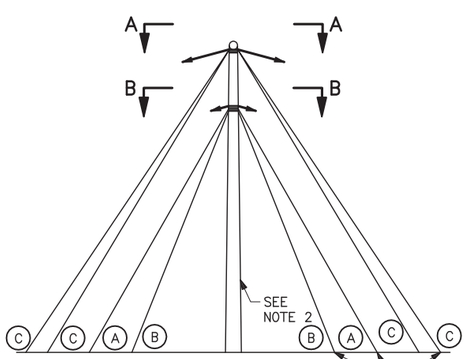

FIGURE 1
OGW AND CONDUCTOR LINE GUYING FOR LINE ANGLES 0° TO 10°

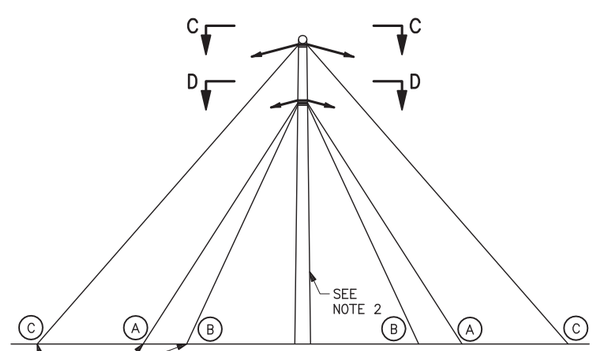

FIGURE 2
OGW AND CONDUCTOR LINE GUYING FOR LINE ANGLES 10° TO 30°

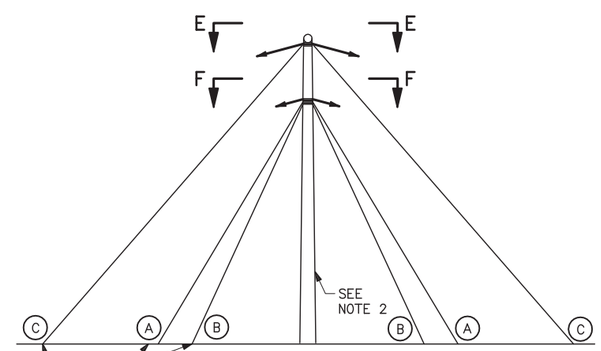

FIGURE 3
OGW AND CONDUCTOR LINE GUYING FOR LINE ANGLES 30° TO 90°

A	03–02–05 A7–KKR	REMOVED NOTE 4. NO LONGER OFFSETTING MIDDLE POLE GUYING.

UNITED STATES DEPARTMENT OF ENERGY
WESTERN AREA POWER ADMINISTRATION
CORPORATE SERVICES OFFICE – LAKEWOOD, COLORADO

STANDARD DESIGNS
TRANSMISSION LINES
TYPE 3TA–1 STRUCTURES
STANDARD GUY ARRANGEMENT

DESIGNED KAREN ROWE APPROVED DOUG HANSON
CIVIL ENGINEERING MANAGER

A	DECEMBER 31, 1996	41	6125

Mar 23, 2006- 11:11am Plotted By:Seela IMAGES:
S:\Engineering\Standard Drawings\41\41.6125a.dwg Last Saved By: TAS on Apr 13, 2005- 8:53am

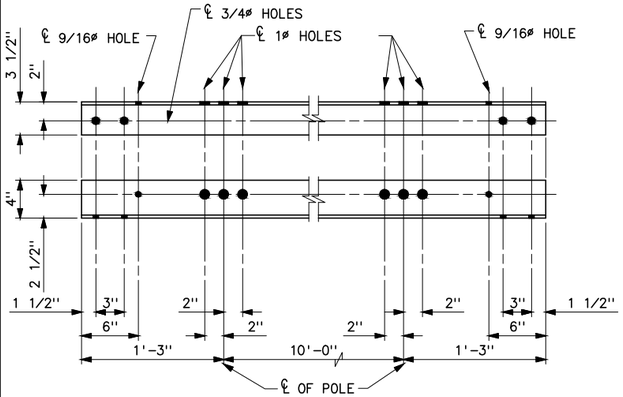

MARK B1
L 4x3 1/2x5/16x12'-6"
WT=97 LBS
(TYPE HS-1 69KV)

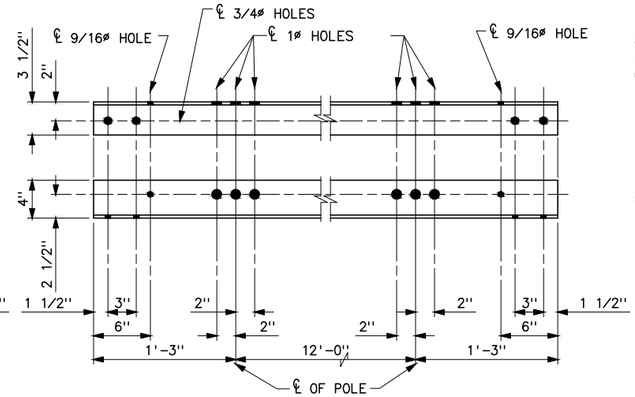

MARK B2
L 4x3 1/2x5/16x14'-6"
WT=112 LBS
(TYPE HSB-1 69 AND 115KV)
(TYPE HS-1 115KV)

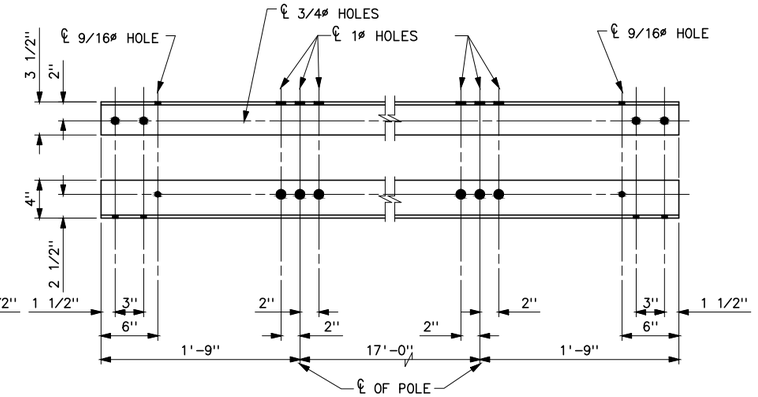

MARK B3
L 4x3 1/2x3/8x20'-6"
WT=187 LBS
(TYPE HSB-1 161KV)

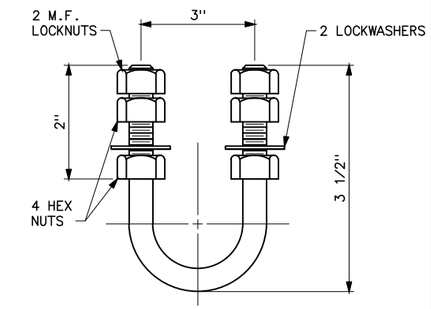

5/8ø U-BOLT
WT=2 LBS

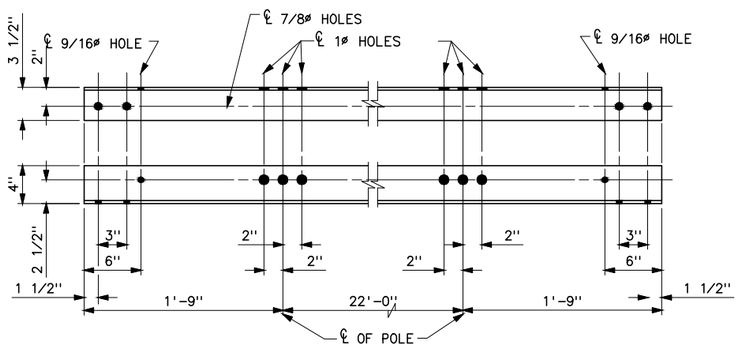

MARK B4
L 4x3 1/2x3/8x25'-6"
WT=232 LBS
(TYPE HSB-1 230KV)

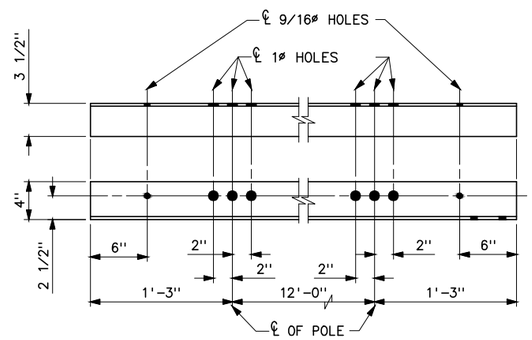

MARK B5
L 4x3 1/2x5/16x14'-6"
WT=112 LBS
(TYPE HA-1 69 AND 115KV)

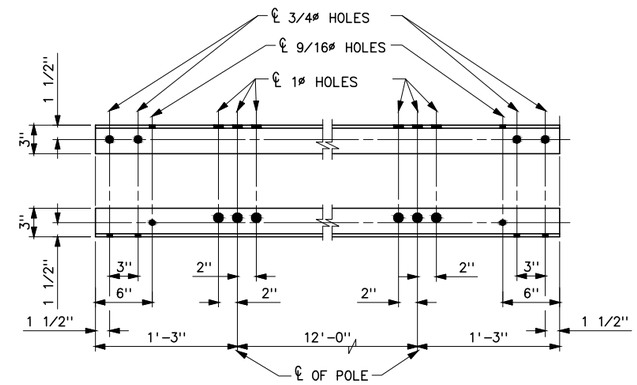

MARK B6
L 3x3x1/4x14'-6"
WT=67 LBS
(TYPES HS-1, HS-2, HS-4 AND HSB-1
69 AND 115KV; SEE NOTE 4)

NOTES

1. STEEL SHALL CONFORM TO ASTM A36. PIECES SHALL BE GALVANIZED AFTER FABRICATION IN ACCORDANCE WITH ASTM A123.
2. STEEL U-BOLTS SHALL MEET IFI 136.
3. NUTS, LOCKWASHERS AND LOCKNUTS SHALL MEET ANSI C135.1.
4. THIS ANGLE IS NOT RECOMMENDED. IT WAS NOT ADEQUATE FOR FALL PROTECTION.

REFERENCE DRAWINGS

TYPE HSB-1 161KV
SUSPENSION STRUCTURE _____ 41 6129
TYPE HSB-1 69 AND 115KV
SUSPENSION STRUCTURE _____ 41 6123
TYPE HS-1 69KV
SUSPENSION STRUCTURE _____ 41 6117
TYPE HSB-1 230KV
SUSPENSION STRUCTURE _____ 41 6128
TYPE HS-1 115KV
SUSPENSION STRUCTURE _____ 41 6122
TYPE HA-1 69 AND 115KV
SUSPENSION STRUCTURE _____ 41 6124
TYPE HSB-1 138KV
SUSPENSION STRUCTURE _____ 41 6159

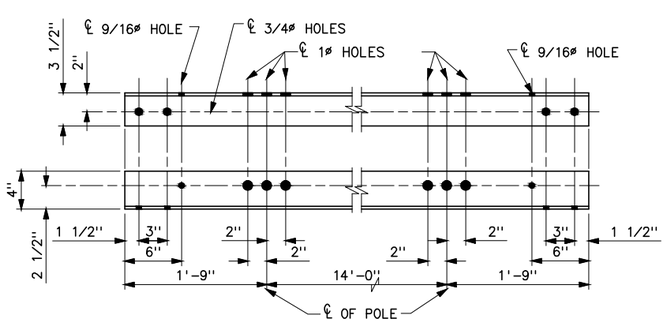

MARK B7
L 4x3 1/2x5/16x16'-6"
WT=128 LBS
(TYPE HSB-1 138KV)

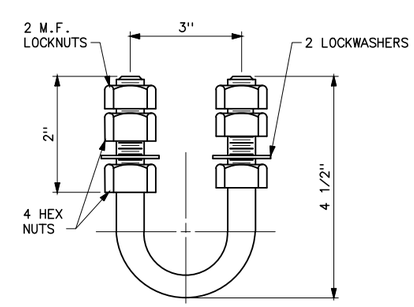

3/4ø U-BOLT
WT=3 LBS

C	08-30-12 A7-CG	ADDED MARK B7, 3/4" U-BOLT AND MADE HOLES LARGER ON MARK B4.
B	02-05-09 A7-CG	REVISED HOLES IN STEEL
A	04-01-03 A7-CG	ADDED DIMENSION TO 9/16ø HOLES ON MARK B6 EACH END.

UNITED STATES DEPARTMENT OF ENERGY
WESTERN AREA POWER ADMINISTRATION
CORPORATE SERVICES OFFICE - LAKEWOOD, COLORADO

STANDARD DESIGNS
TRANSMISSION LINES
STEEL ANGLE DETAILS
FOR WOOD POLE STRUCTURES

DESIGNED CHARLIE GARCIA APPROVED DOUG HANSON
CIVIL ENGINEERING MANAGER

CAE | SEPTEMBER 01, 2000 | 41 | 6133

Plotted By: lampman Aug 20, 2013- 1:32pm
IMAGES:
S:\Projects\Misc\StandardDrawings\Drawings\Final\41_6133c.dwg Last Saved By: Seela, Holly on 8/30/2012 12:10 PM

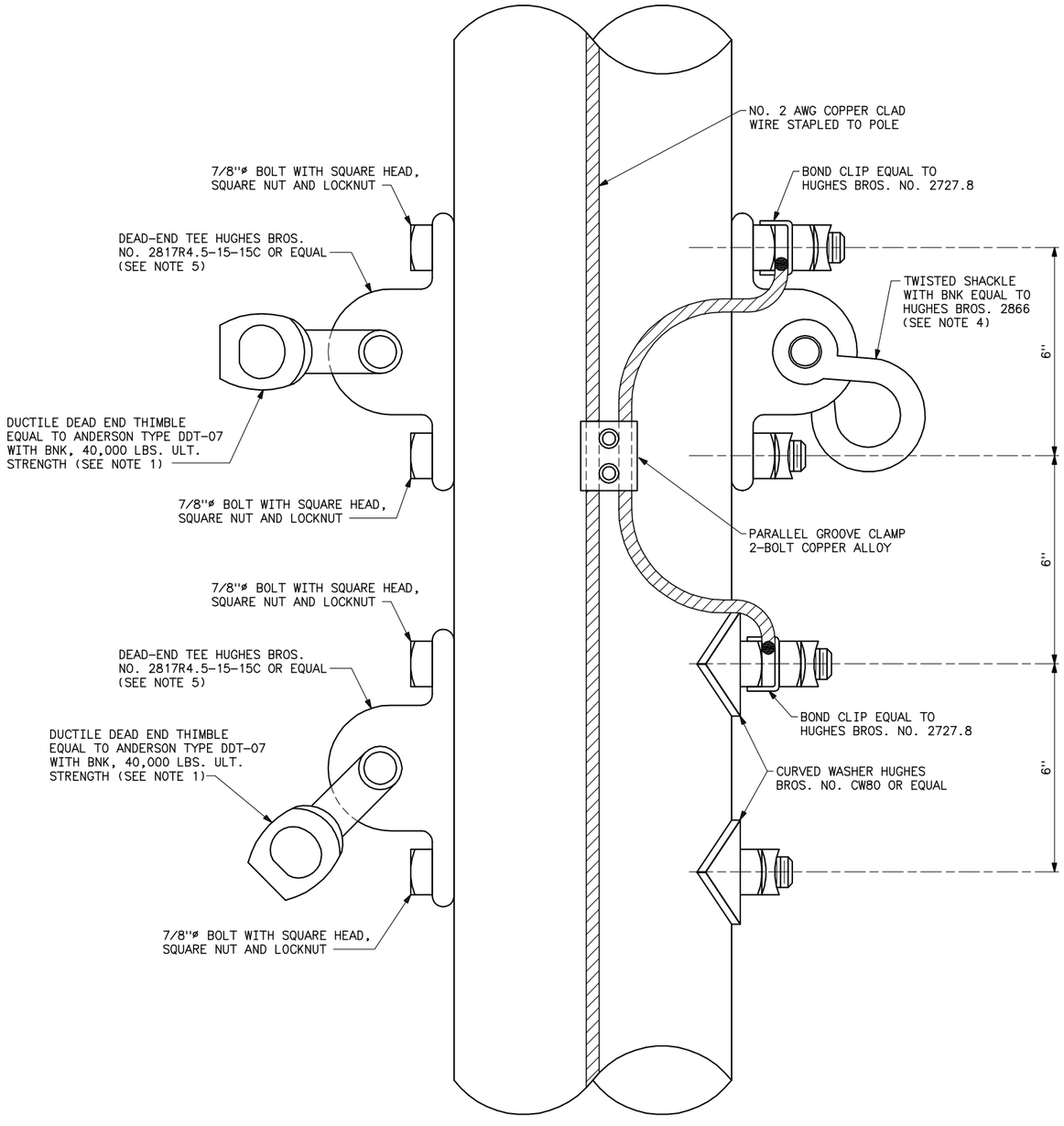

TYPICAL DETAILS FOR DEAD END TEES

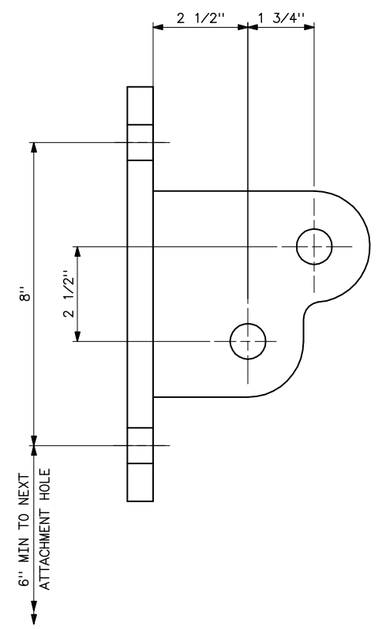

DOUBLE GUYING DEAD-END TEE
HUGHES BROS NO. AS2720
OR EQUAL (SEE NOTE 6)

NOTES

1. DUCTILE DEAD END THIMBLE REPLACES CONNECTING LINKS AND SHEAVE WHEELS THAT ARE USED WITH POLE BAND CONSTRUCTION.
2. ALL HOLES IN WOOD SHALL BE BORED 1/8" LARGER THAN THEIR RESPECTIVE BOLT DIAMETERS.
3. BNK INDICATES BOLT, NUT, AND STAINLESS STEEL COTTER KEY REQUIRED.
4. FOR ANGLES LESS THAN 20 DEGREES REPLACE SHACKLE WITH CLEVIS-CLEVIS FITTING AND 16" EXTENSION LINK WITH BNK, 40,000 LBS. ULT. STRENGTH.
5. THE ULTIMATE STRENGTH OF DEAD-END TEE HUGHES BROS NO. 2817R4.5-15-15C IS 60,000 POUNDS. THIS DEAD-END TEE CAN ACCOMMODATE UP TO TWO DOUBLE GUYS WITH TWO EXTENSION LINKS AND TWO SHEAVE WHEELS.
6. THE DOUBLE GUYING DEAD-END TEE OPTION CAN BE USED IN PLACE OF TWO SINGLE DEAD-END TEES. THE ULTIMATE STRENGTH OF THE DOUBLE GUYING DEAD-END TEE HUGHES BROS NO. AS2720 IS 35,000 POUNDS PER ATTACHMENT. EACH ATTACHMENT CAN ACCOMMODATE UP TO ONE DOUBLE GUY.
7. OTHER DEAD-END TEES MAY BE USED AS LONG AS THE ULTIMATE STRENGTH PER ATTACHMENT IS AT LEAST 29,000 POUNDS.

REFERENCE DRAWING

GUY ASSEMBLY AND DETAILS _____ 41 6047

B	6-9-10 A7-KKR	ADDED DOUBLE GUYING DEAD-END TEE OPTION AND NOTES 5, 6, AND 7.
A	02-28-06 A7-KKR	ADDED NOTE 4.

UNITED STATES DEPARTMENT OF ENERGY
WESTERN AREA POWER ADMINISTRATION
CORPORATE SERVICES OFFICE - LAKEWOOD, COLORADO

STANDARD DESIGNS
TRANSMISSION LINES
TYPICAL DETAILS FOR
DEAD END TEES

DESIGNED KAREN ROWE APPROVED DOUG HANSON
CIVIL ENGINEERING MANAGER

CAE	JANUARY 24, 2005	41	6138

Plotted By:entwistle Nov 08, 2010- 2:25pm
LWASCS
S:\Projects\Misc\StandardDrawings\DesignDrawings\xDwgsReadyForFinal\Scripts\41_6138b.dwg Last Saved By: Holly Seela on 6/9/2010 2:58 PM

OPTICAL GROUND WIRE SPLICE STRUCTURE MATERIALS

PART NO.	QUANTITY	DESCRIPTION
1	4*	DEAD-END TEE, HUGHES BROS. NO. 2817R4.5-15-15C OR EQUAL
2	2	DUCTILE DEAD END THIMBLE EQUAL TO ANDERSON TYPE DDT-07 WITH BNK, 40,000 LBS. ULT. STRENGTH (SEE NOTE 6)
3	4	7/8"ø BOLT WITH SQUARE HEAD, SQUARE NUT AND LOCKNUT
4	2	BOND CLIP EQUAL TO HUGHES BROS. NO. 2727.8
5	1	PARALLEL GROOVE CLAMP 2-BOLT COPPER ALLOY
6	AS REQ'D	NO. 2 AWG COPPER CLAD WIRE

EXPLANATION

*_____SEE NOTES 4 AND 5

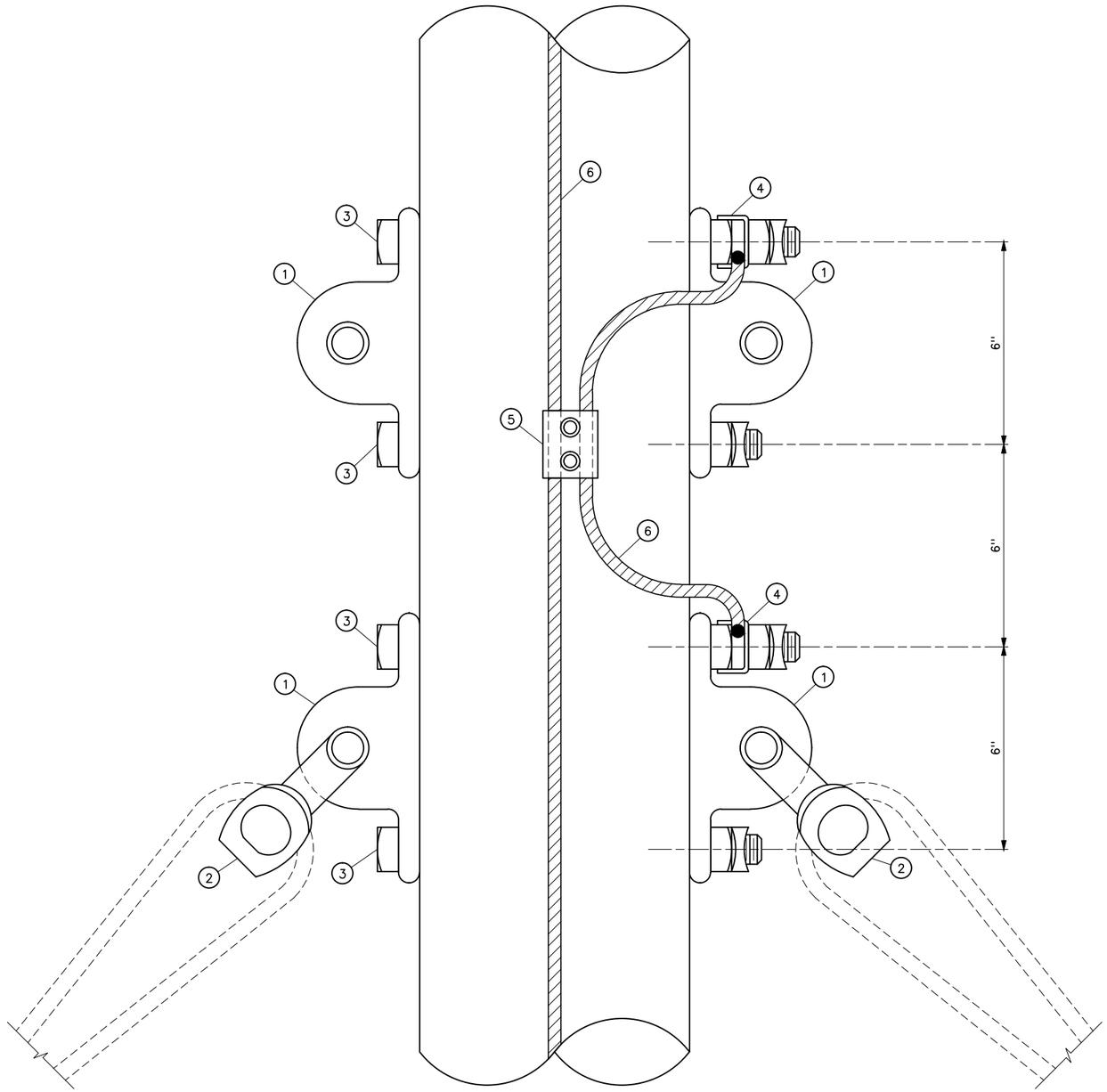

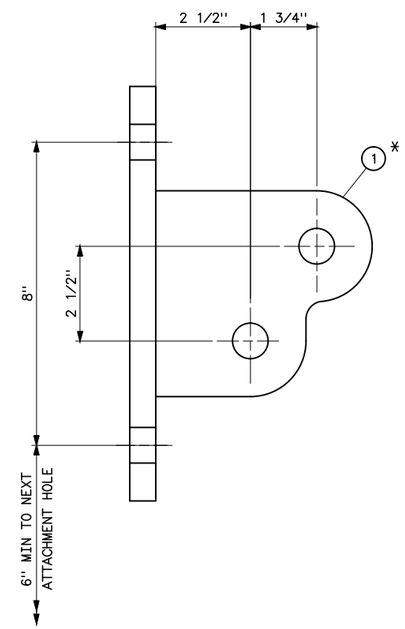

* DOUBLE GUYING DEAD-END TEE
HUGHES BROS NO. AS2720
OR EQUAL (SEE NOTE 4)

NOTES

1. ALL HOLES IN WOOD SHALL BE BORED 1/8" LARGER THAN THEIR RESPECTIVE BOLT DIAMETERS.
2. BNK INDICATES BOLT, NUT, AND STAINLESS STEEL COTTER KEY REQUIRED.
3 FOR INSTALLATION ON TANGENT H-FRAME OR TENSION STRUCTURES ONLY.
4. THE DOUBLE GUYING DEAD-END TEE OPTION CAN BE USED IN PLACE OF TWO SINGLE DEAD-END TEES. THE ULTIMATE STRENGTH OF THE DOUBLE GUYING DEAD-END TEE HUGHES BROS NO. AS2720 IS 35,000 POUNDS PER ATTACHMENT. EACH ATTACHMENT CAN ACCOMMODATE UP TO ONE DOUBLE GUY.
5. OTHER DEAD-END TEES MAY BE USED AS LONG AS THE ULTIMATE STRENGTH PER ATTACHMENT IS AT LEAST 29,000 POUNDS.
6. A LINK AND ROLLER EQUAL TO HUGHES BROTHERS 3154 LINK AND 28062 ROLLER MAY ALSO BE USED.

REFERENCE DRAWINGS

OPTICAL GROUND WIRE ASSEMBLIES_____41 1031
GUY ASSEMBLIES AND DETAILS_____41 6047

A	11-8-13 A7-KKR	ADDED DOUBLE GUYING DEAD-END TEE OPTION.

UNITED STATES DEPARTMENT OF ENERGY
WESTERN AREA POWER ADMINISTRATION
CORPORATE SERVICES OFFICE - LAKEWOOD, COLORADO

STANDARD DESIGNS
TRANSMISSION LINES
TYPICAL DETAILS FOR OPTICAL GROUND WIRE SPLICE STRUCTURES

DESIGNED KAREN ROWE APPROVED DOUG HANSON CIVIL ENGINEERING MANAGER

CAE	FEBRUARY 28, 2006	41	6153

Mar 07, 2014- 7:08am Plotted By:seeto IMAGES:
S:\Projects\Standard\Drawings\Design\Drawings\Civil\41_6153.dwg Last Saved By: TAS on Mar 01, 2006- 10:56am

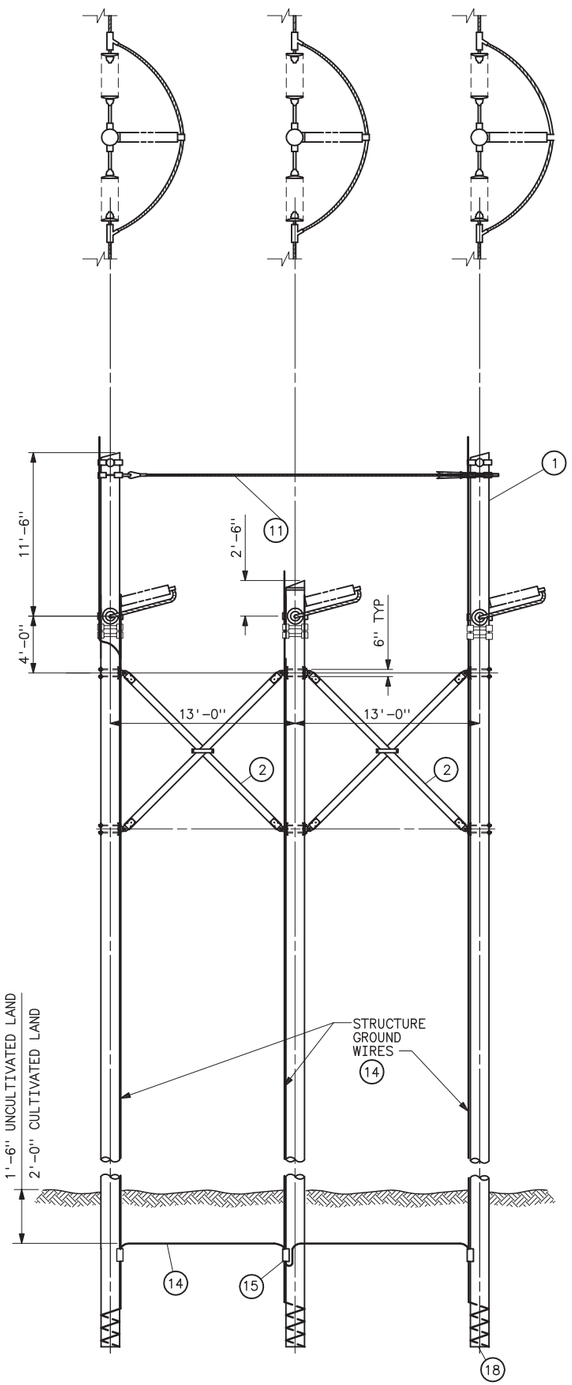

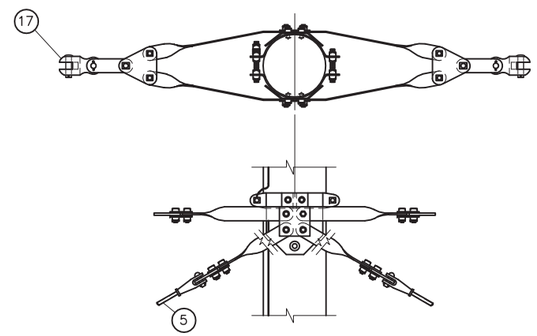

DETAIL OF INSULATOR ATTACHMENT (4)
(0° LINE ANGLE)

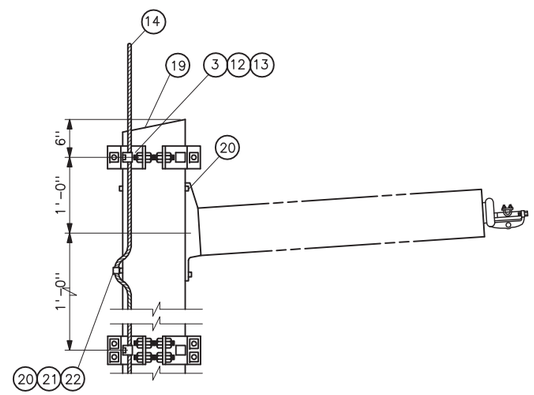

POST INSULATOR ASSEMBLY

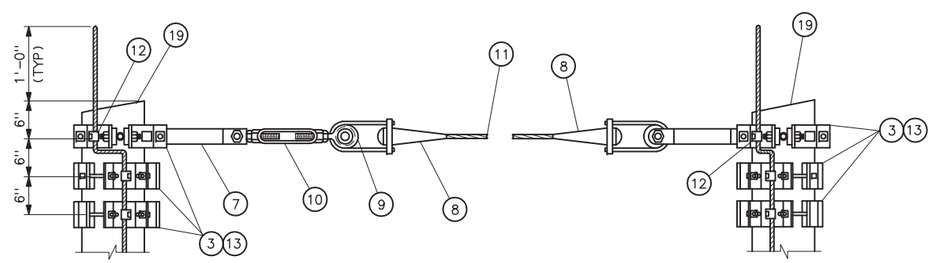

OGW ATTACHMENT
(0° LINE ANGLE)

STRUCTURE MATERIAL

PART NO.	ANGLE 0°	DESCRIPTION
1	3	POLE, SEE STRUCTURE LIST FOR LENGTH
2	2	X-BRACE, COMPLETE WITH FITTINGS, 5 1/8x6 (HUGHES BROS NO. 2121 OR EQUAL)
3	7	FOUR-WAY STRAIN POLE BAND; HUGHES 3103 SERIES, JOSLYN J25967 SERIES; OR, APPROVED EQUAL
4	3	POLE BAND ASSEMBLY, HUGHES B1784-VV OR APPROVED EQUAL
5	6	FIBERGLASS GUY INSULATOR, 10 FT LENGTH
6		
7	6	CONNECTING LINK, PAIR W/BNK; HUGHES 3154; JOSLYN J6650; OR, APPROVED EQUAL CONNECTING LINK W/BNK
8	2	DEAD-END AUTOMATIC VISE TYPE FOR GUY STRAND
9	2	SHEAVE WHEEL, 2 1/2 DIA MINIMUM
10	1	TURNBUCKLE, CLEVIS-EYE, 7/8x12
11	AS REQD	STEEL STRAND 7/16, 7-WIRE, HIGH STRENGTH
12	7	1/2ø GROUNDING CLIP ASSEMBLY (INCLUDES BONDING CLIP, CARRIAGE BOLT, NUT AND LOCKNUT). HUGHES 2718.55 OR EQUAL
13	14	LAG SCREWS, 1/2x4 WITH FLAT WASHERS (2 EACH PER BAND)
14	AS REQD	NO. 2 AWG 30% CONDUCTIVITY, COPPER CLAD WIRE ATTACHED WITH 2-INCH STAPLES
15	3	PARALLEL GROOVE CLAMP, 2-BOLT COPPER ALLOY
16	4	OVERHEAD GROUND WIRE TENSION ASSEMBLY
17	6	CLEVIS-CLEVIS 90° W/BNK, 40,000 LBS
18	3	POLE BOTTOM PLATE (BLACKBURN NO. GP 110 OR EQUAL) ATTACHED TO POLE
19	3	POLE ANTISPLITTING DEVICE EQUAL TO STAR-LOCK MANUFACTURED BY THE BAYNE COMPANY

POST INSULATOR ASSEMBLY MATERIAL

PART NO.	QUANTITY 0°	DESCRIPTION
20	6	7/8xREQD LENGTH MACHINE BOLT WITH LOCKNUT AND LOCK WASHER
21	6	4x4x1/4 CURVED SQUARE WASHER WITH 15/16" HOLE
22	3	BONDING CLIP (EQUAL TO BROOKS MANU BC SERIES OR HUGHES BROS NO. 2727)

NOTES

1. THE 3TD STRUCTURE IS USED FOR CASCADE PREVENTION.
2. FITTINGS SHALL INCLUDE BOLTS, NUTS, AND WASHERS.
3. ALL HOLES SHALL BE BORED 1/8 INCH LARGER IN WOOD POLE THAN THEIR RESPECTIVE BOLT DIAMETERS.
4. MATERIAL REQUIRED WHERE HORIZONTAL LINE POST INSULATORS ARE USED ARE BASED ON BOLT SIZES SHOWN. INSULATOR MAY REQUIRE BOLTS, LOCKNUTS, AND WASHERS OF DIFFERENT SIZES.
5. DEAD END TEES MAY BE USED IN LIEU OF POLE BANDS. CONNECTING LINKS, SHEAVE WHEELS AND GROUNDING CLIP ASSEMBLIES ARE NOT REQUIRED WITH DEAD END TEES. SEE STANDARD DRAWING 41 6138.

REFERENCE DRAWINGS

WOOD POLE STRUCTURES
GROUNDING DETAILS _____ 41 1012
OVERHEAD GROUND WIRE ASSEMBLY
DETAILS FOR WOOD POLE STRUCTURES _____ 41 1019
TENSION INSULATOR ASSEMBLIES
SINGLE STRING _____ 41 1022
DOUBLE STRING _____ 41 1023
OPTICAL GROUND WIRE ASSEMBLIES _____ 41 1031
TYPE 3TA-1 STRUCTURES
STANDARD GUY ARRANGEMENT _____ 41 6125
TYPICAL DETAILS FOR DEAD END TEES _____ 41 6138

UNITED STATES DEPARTMENT OF ENERGY
WESTERN AREA POWER ADMINISTRATION
CORPORATE SERVICES OFFICE - GOLDEN, COLORADO

STANDARD DESIGNS
TRANSMISSION LINES
TYPE 3TD 115KV
3-POLE TENSION DEAD END STRUCTURE

DESIGNED KAREN ROWE APPROVED DOUG HANSON CIVIL ENGINEERING MANAGER

A	FEBRUARY 15, 2006	41	6157

Jul 12, 2006- 11:55am Plotted By:seela IMAGES:
S:\Projects\StandardDrawings\Design\Drawings\Civil\41_6157.dwg Last Saved By: C. Knezel on Apr 24, 2006- 2:25pm

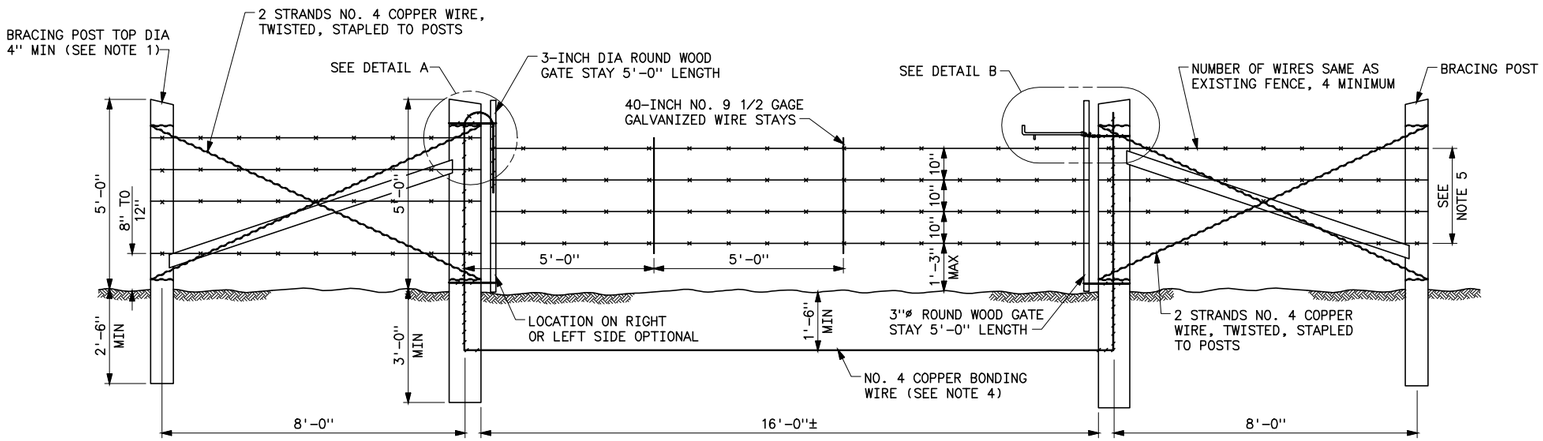

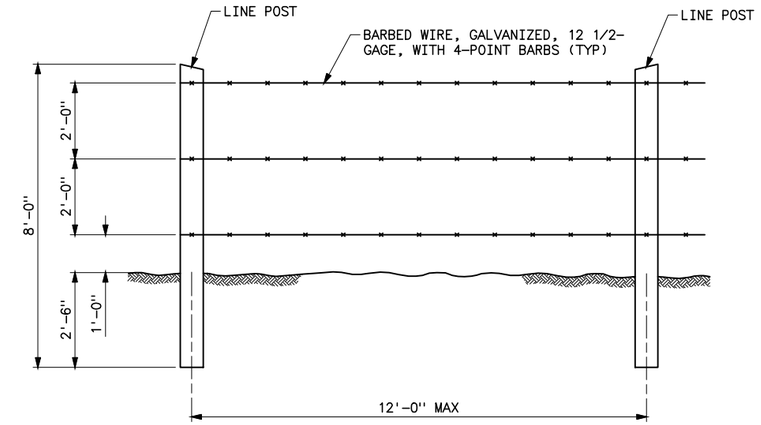

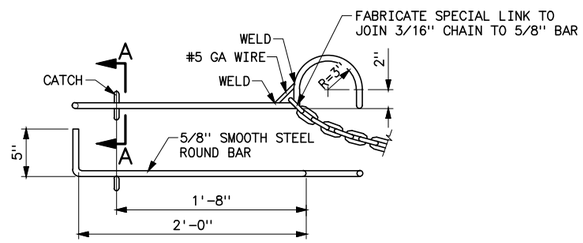

DETAIL OF GATE CLOSER

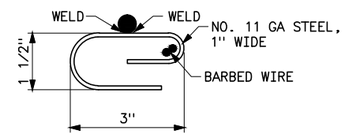

SECTION A-A
(DETAIL OF CATCH)

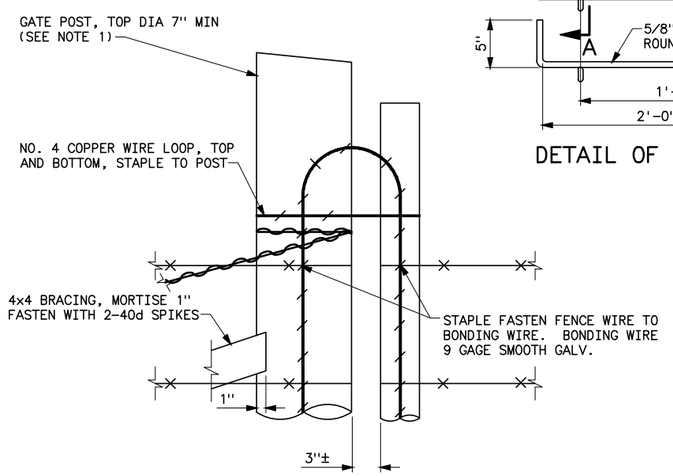

DETAIL A

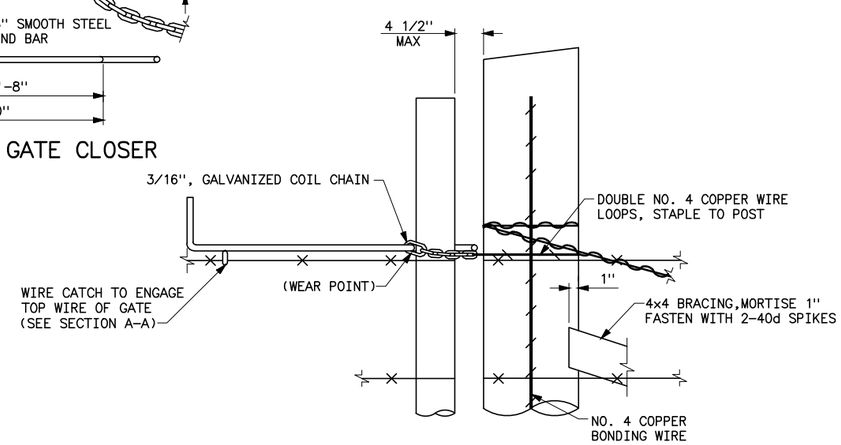

DETAIL B

NOTES

1. GATE CONSTRUCTION INCLUDES POSTS AND BRACING.
2. POSTS AND BRACES SHALL BE PRESSURE-TREATED TIMBER.
3. GATE CLOSER SHALL BE GALVANIZED IN ACCORDANCE WITH ASTM DESIGNATION A-153.
4. INSTALL BOTTOM COPPER BONDING WIRE BETWEEN GATE POSTS ONLY IF GATE IS WITHIN A FENCE WHICH CROSSES UNDER OR IS PARALLEL TO AND WITHIN 150 FEET OF TRANSMISSION LINE CENTERLINE.
5. CONNECT EACH NEW FENCE WIRE TO EXISTING FENCE WIRE FOR ELECTRICAL GROUNDING.

N	10-26-11 A7-KR	MINOR RRVISIONS
M	7-21-10 A7-DH	MINOR REVISIONS.
L	5-15-07 A7-DH	MINOR REVISIONS.

UNITED STATES DEPARTMENT OF ENERGY
WESTERN AREA POWER ADMINISTRATION
CORPORATE SERVICES OFFICE - LAKEWOOD, COLORADO

TRANSMISSION LINE STANDARDS
BARBED WIRE GATE
FOR RIGHT-OF-WAY FENCES

DESIGNED K. ROWE APPROVED W.C. COWAN
CHIEF, TRANSMISSION LINE STRUCTURAL BRANCH

CAD	APRIL 25,1994	41	9002

Plotted By: Lampman Nov 14, 2011- 11:03am
IWAS:
S:\Projects\Misc\StandardDrawings\DesignDrawings\xDwgsReadyForFinal\Scripts\41_9002n.dwg Last Saved By: Holly Seela on 10/26/2011 1:32 PM

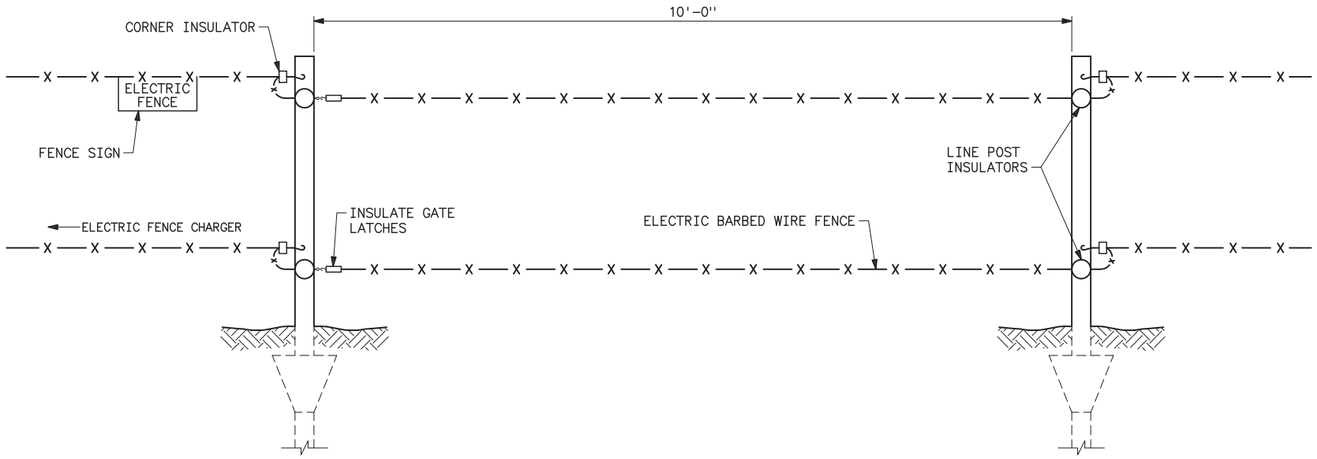

NOTE

1. WHERE SINGLE WIRE FENCES EXIST, FURNISH AND INSTALL MATERIALS FOR SINGLE WIRE GATE.

LIST OF MATERIALS	
QTY	DESIGNATION
4	BOLT, "J" TYPE, WITH WING NUT
4	INSULATOR, CORNER
4	INSULATOR, LINE POST
2	LATCH, GATE INSULATED
2	POST, ANGLE, 3/4x3/4x7/64 - 4 1/2 FEET HIGH
1	SIGN, ELECTRIC FENCE, 4x8
20'	WIRE, BARBED, 18-GA GALV STEEL FOR ELEC FENCE

C	7-15-03 A7-RC	REVISED TITLE BLOCK ONLY.
B	7-13-99 A3-RMC	REDRAWN.

SUPERSEDES DWG NO. 40-D-5910

UNITED STATES DEPARTMENT OF ENERGY
WESTERN AREA POWER ADMINISTRATION
CORPORATE SERVICES OFFICE - LAKEWOOD, COLORADO

TRANSMISSION LINE STANDARDS
ELECTRIC BARBED WIRE GATE
FOR RIGHT-OF-WAY FENCES

DESIGNED BUREC APPROVED ROSS M. CLARK
ELECTRICAL ENGINEERING MANAGER

CAE	JUNE 24, 1981	41	9003

Mar 23, 2006- 11:14am Plotted By: Seelo S:\Engineering\Standard Drawings\41\41_9003c.dwg Last Saved By: palmer IMAGES:

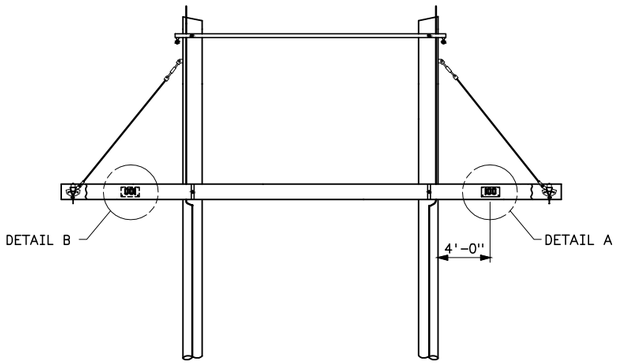

AERIAL PATROL MILE MARKER SIGN LOCATION
H-FRAME STRUCTURE

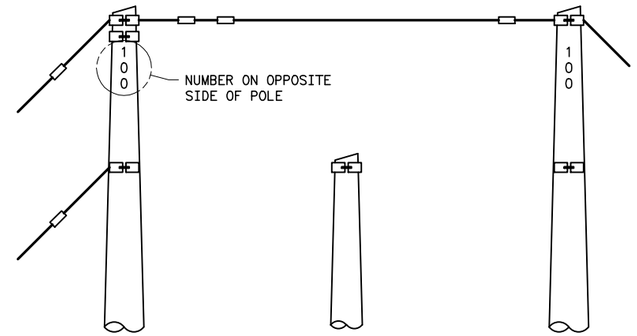

AERIAL PATROL MILE MARKER SIGN LOCATION
3-POLE OR SINGLE POLE STRUCTURES
(SEE NOTE 8)

NOTES

1. SIGNS SHALL BE MADE OF NO. 18 U.S. GAGE SHEET STEEL.
2. FINISH SHALL BE PORCELAIN ENAMEL. BACKGROUND COLOR SHALL BE YELLOW, FIGURES SHALL BE BLACK.
3. FIGURES SHALL BE OF THE "BLOCK" TYPE, 5-INCHES HIGH AND 3-INCHES WIDE. BODY LINES SHALL BE 3/4-INCH WIDE.
4. EACH SIGN SHALL HAVE FOUR FINISHED 1/2-INCH HOLES. HOLES IN SIGNS SHALL BE FITTED WITH BRASS EYELETS.
5. EACH SIGN SHALL BE 8-INCHES HIGH, WIDTH MAY VARY AS FOLLOWS:
   FOR THREE DIGIT SIGNS SUCH AS 200, WIDTH SHALL BE 17-INCHES;
   FOR THREE DIGIT SIGNS SUCH AS 100, WIDTH SHALL BE 15-INCHES;
   FOR TWO DIGIT SIGNS SUCH AS 20, WIDTH SHALL BE 13-INCHES;
   FOR ONE DIGIT SIGNS SUCH AS 2, WIDTH SHALL BE 9-INCHES.
6. THE PORCELAIN ENAMEL SHALL BE IN ACCORDANCE WITH THE RECOMMENDED STANDARDS FOR MANUFACTURE OF PORCELAIN ENAMEL SIGNS (PEI:S-103) OF THE SIGN DIVISION OF THE PORCELAIN ENAMEL INSTITUTE, INC.
7. ALL FERROUS HARDWARE SHALL BE GALVANIZED.
8. 6-INCH HIGH NUMBERS SHALL BE ATTACHED ONE FOOT BELOW LOWEST POLE BAND ON RIGHT HAND POLE SIMILAR TO STRUCTURE NUMBER SIGNS.

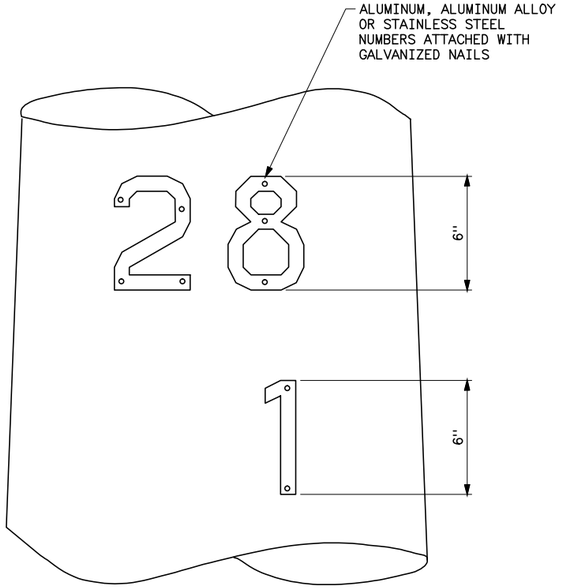

STRUCTURE NUMBER SIGNS
(MOUNT 8 FOOT ABOVE GROUNDLINE
ON RIGHT POLE WHEN LOOKING
AHEAD AND BACK ON LINE)

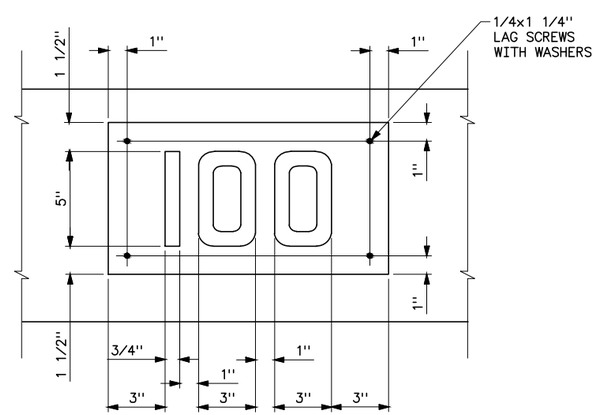

AERIAL PATROL MILE MARKER SIGNS
(ONLY ON FIRST STRUCTURE OF EACH MILE SECTION OF LINE)

DETAIL A (FRONT FACE)
DETAIL B (BACK FACE)

E	11-8-13 A7-KKR	CHANGED NOTE ON STRUCTURE NUMBER SIGNS.
D	7-15-03 A7-RC	REVISED TITLE BLOCK ONLY.
C	8-21-95 A2-RMC	REVISED AND REDRAWN.

SUPERSEDES DWG NO. 40-D-5174

UNITED STATES DEPARTMENT OF ENERGY
WESTERN AREA POWER ADMINISTRATION
CORPORATE SERVICES OFFICE - LAKEWOOD, COLORADO

TRANSMISSION LINE STANDARDS
WOOD POLE STRUCTURES
AERIAL PATROL MILE MARKER AND NUMBER SIGNS

DESIGNED K. ROWE APPROVED ROSS CLARK
CHIEF, TRANSMISSION LINE BRANCH

C A E	AUGUST 21, 1995	41	9004

Jun 05, 2014- 8:01am Plotted By: denton S:\projects\Transmissionlines\Lovell_Thermopolis_2010\Drawings\Final\41_9004e.dwg Last Saved By: martinez IMAGES:

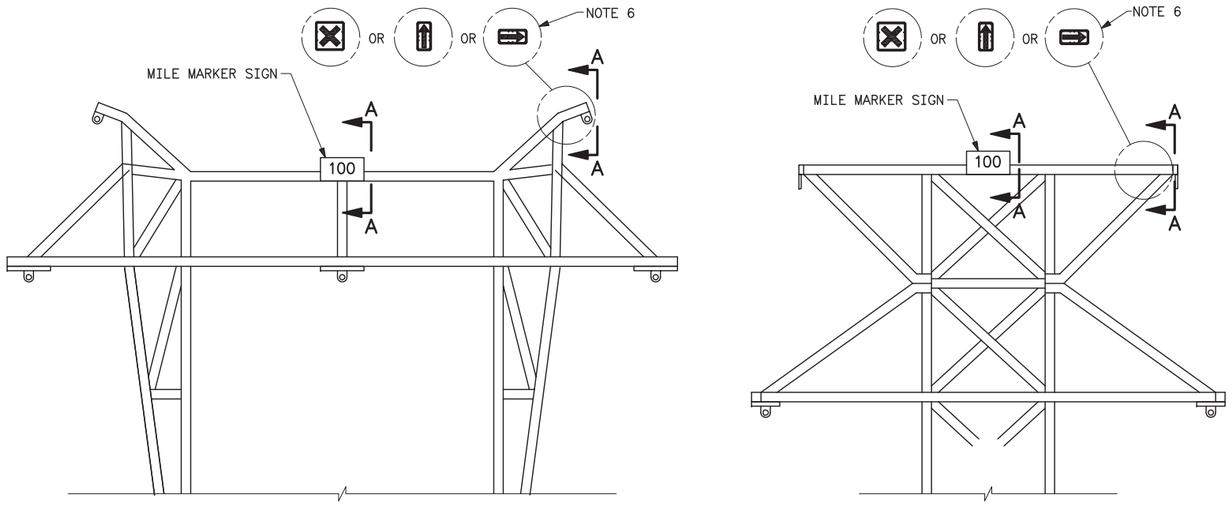

LOCATION AND MOUNTING DETAILS FOR SIGNS ON LATTICE STEEL TOWERS

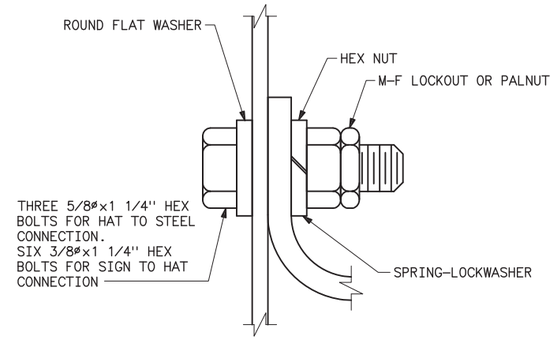

DETAIL B

SIGN MOUNTING HARDWARE
(SEE NOTE 2)

MATERIAL SPECIFICATIONS
(FOR MILE MARKER SIGNS)

1. SIGNS SHALL BE MADE OF NO. 16 US GAUGE SHEET STEEL.
2. FINISH SHALL BE PORCELAIN ENAMEL. BACKGROUND COLOR SHALL BE YELLOW. FIGURES SHALL BE BLACK.
3. FIGURES SHALL BE OF THE ''BLOCK'' TYPE, 10 INCHES HIGH AND 6 INCHES WIDE. BODY LINES SHALL BE 1 1/2 INCHES WIDE.
4. THE PORCELAIN ENAMEL SHALL BE IN ACCORDANCE WITH THE RECOMMENDED STANDARDS FOR MANUFACTURE OF PORCELAIN ENAMEL SIGNS (PEI:S-103) OF THE SIGN DIVISION OF THE PORCELAIN ENAMEL INSTITUTE, INC.
5. ALL FERROUS HARDWARE SHALL BE GALVANIZED.

NOTES

1. FIRST STRUCTURE OF EACH MILE SECTION SHALL BE MARKED WITH TWO METAL AERIAL PATROL NUMBER SIGNS, ONE MOUNTED EACH SIDE OF TOWER AS SHOWN ABOVE. LOCATION AND MOUNTING DETAILS ARE GENERAL AND MAY BE MODIFIED TO SUIT LOCAL CONDITIONS.
2. HOLES FOR MOUNTING HARDWARE SHALL BE 1/16'' LARGER THAN SIZE OF BOLT USED. HOLES IN SIGNS SHALL BE FURNISHED AND FITTED WITH BRASS EYELETS. LONGITUDINAL SPACING OF ALL HOLES IN HAT SECTIONS INCLUDING THOSE FOR HAT SECTIONS TO STEEL CONNECTIONS SHALL BE THE SAME AS USED FOR SIGNS.
3. WARNING ''X'' SIGN SHALL BE STANDARD UNITED STATES DEPARTMENT OF TRANSPORTATION (DOT) FEDERAL HIGHWAY SIGN, DESIGNATION W2-1, TURNED ONE-FOURTH OF A TURN TO BECOME AN ''X''.
4. WARNING ARROW SIGN SHALL BE STANDARD DOT SIGN DESIGNATION W1-6.
5. BACKGROUND COLOR FOR WARNING SIGNS SHALL BE ENGINEER GRADE YELLOW IN ACCORDANCE WITH ASTM D 4956. ''X'' OR ARROW SHALL BE BLACK.
6. FOR STRUCTURE LOCATIONS AND REQUIRED TYPE OF WARNING SIGN, SEE SPECIFICATIONS AND PLAN AND PROFILE DRAWINGS.

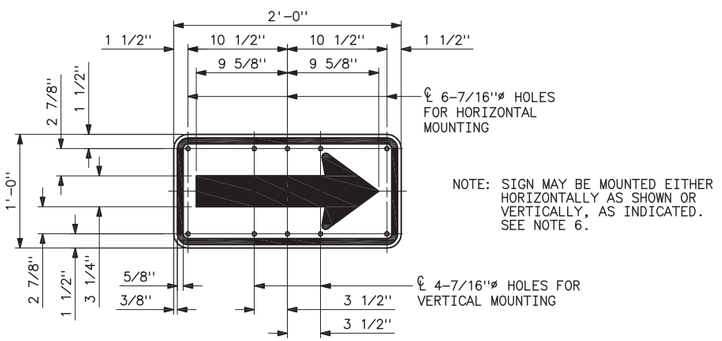

NOTE: SIGN MAY BE MOUNTED EITHER HORIZONTALLY AS SHOWN OR VERTICALLY, AS INDICATED. SEE NOTE 6.

WARNING ARROW

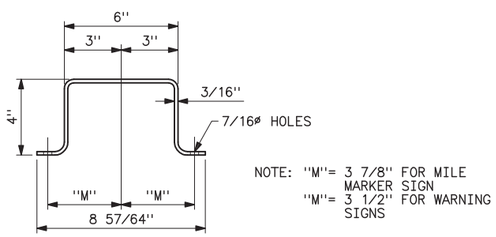

NOTE: ''M''= 3 7/8'' FOR MILE MARKER SIGN
''M''= 3 1/2'' FOR WARNING SIGNS

HAT SECTION

LEGNTH OF HAT SHALL BE SAME AS SIGN

REFERENCE DRAWING

AERIAL PATROL WARNING SIGNS AND MARKER BALL MARKING DIAGRAMS_ _ _ _ _ _ _ _ 41 9029

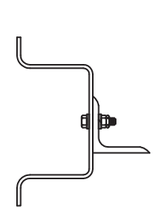

DETAIL X

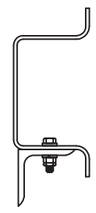

DETAIL Y

SEE DETAIL B FOR MOUNTING HARDWARE

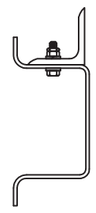

DETAIL Z

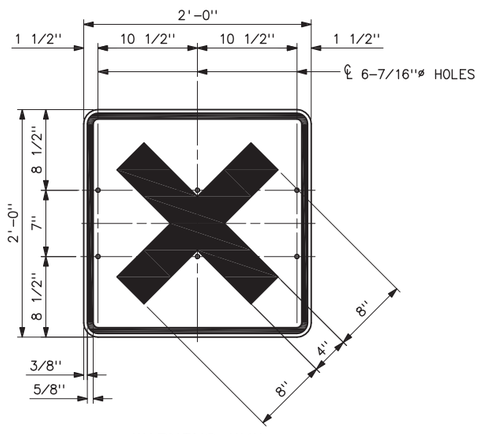

WARNING ''X''

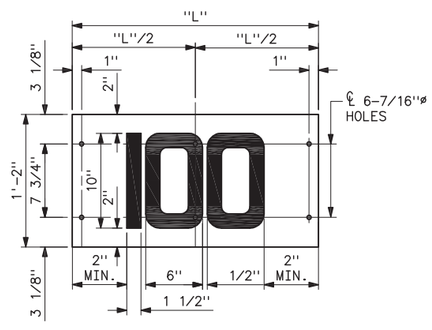

NOTE: ''L''= 10'' FOR SINGLE DIGIT
''L''= 18'' FOR TWO DIGITS
''L''= 26'' FOR THREE DIGITS

MILE MARKER SIGNS
2 SIGNS PER TOWER

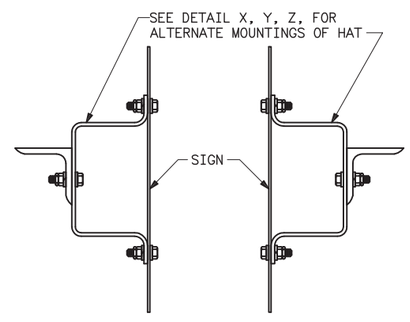

SECTION A-A

D	7-15-03 A7-RC	REVISED TITLE BLOCK ONLY.
C	11-7-00 A3-RMC	REDRAWN, ADDED WARNING SIGNS, NOTES, AND REFERENCE DRAWING NUMBER.
B	7-13-99 A3-RMC	REDRAWN.

SUPERSEDES DWG NO. 40-D-6045

UNITED STATES DEPARTMENT OF ENERGY
WESTERN AREA POWER ADMINISTRATION
CORPORATE SERVICES OFFICE - LAKEWOOD, COLORADO

TRANSMISSION LINE STANDARDS
LATTICE STEEL TOWERS
AERIAL PATROL MILE MARKER NUMBER AND WARNING SIGNS

DESIGNED BUREC_ _ _ _ _ _ _ _ APPROVED ROSS M. CLARK _ _ _ _ _ _ _ _ _
ELECTRICAL ENGINEERING MANAGER

CAE	AUGUST 6, 1979	41	9005

Mar 23, 2006- 11:15am Plotted By: Seelo S:\Engineering\Standard Drawings\41\41_9005d.dwg Last Saved By: palmer IMAGES:

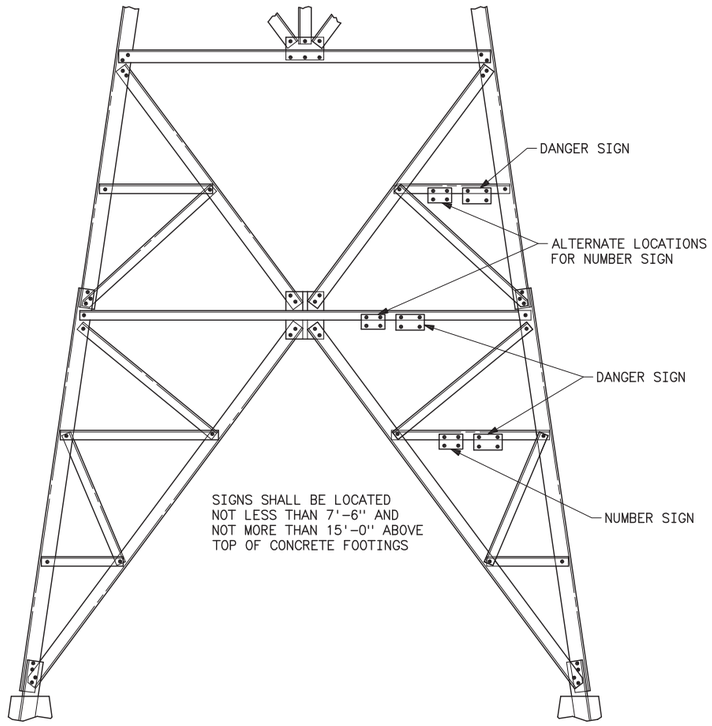

STRUCTURE NUMBER LOCATION

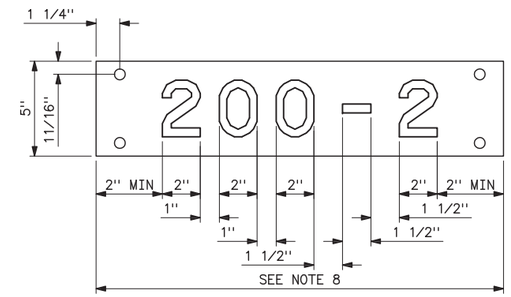

NUMBER SIGN SPECIFICATIONS

NOTES

1. SIGNS SHALL BE FASTENED BY MEANS OF EITHER THE TOP OR THE BOTTOM TWO HOLES.
2. ALL FERROUS HARDWARE SHALL BE GALVANIZED.
3. SEE DRAWING NO. 41 9027 FOR LOCATION OF SIGNS ON TUBULAR STEEL STRUCTURES.
4. SIGNS SHALL BE MADE OF NO. 18 US GAUGE SHEET STEEL.
5. FINISH SHALL BE PORCELAIN ENAMEL. BACKGROUND COLOR SHALL BE YELLOW. FIGURES SHALL BE BLACK.
6. FIGURES SHALL BE OF THE "BLOCK" TYPE, 3-INCHES HIGH AND 2-INCHES WIDE. BODY LINES SHALL BE 1/2-INCH WIDE.
7. EACH SIGN SHALL HAVE FOUR FINISHED HOLES LARGE ENOUGH TO TAKE 3/8-INCH BOLTS. HOLES IN SIGNS SHALL BE FITTED WITH BRASS EYELETS.
8. EACH SIGN SHALL BE 5-INCHES HIGH, WIDTH MAY VARY AS FOLLOWS:
   FOR FOUR DIGIT SIGNS SUCH AS 200-2, WIDTH SHALL BE 18 1/2-INCHES.
   FOR FOUR DIGIT SIGNS SUCH AS 100-2, WIDTH SHALL BE 17-INCHES.
   FOR THREE DIGIT SIGNS SUCH AS 20-2, WIDTH SHALL BE 15 1/2-INCHES.
   FOR TWO DIGIT SIGNS SUCH AS 2-2, WIDTH SHALL BE 12 1/2-INCHES.
9. THE PORCELAIN ENAMEL SHALL BE IN ACCORDANCE WITH THE RECOMMENDED STANDARDS FOR MANUFACTURE OF PORCELAIN ENAMEL SIGNS (PEI:S-103) OF THE SIGN DIVISION OF THE PORCELAIN INSTITUTE, INC.
10. TWO SIGNS PER STRUCTURE ONE AHEAD ON LINE AND ONE BACK.

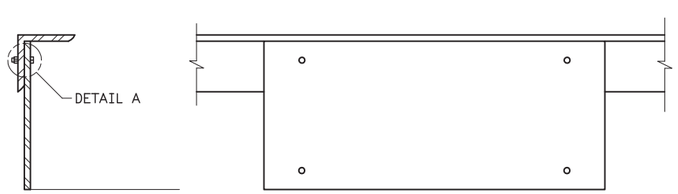

SIGN FASTENING DETAIL

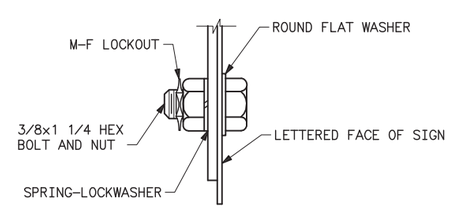

DETAIL A
SIGN MOUNTING HARDWARE

F	7-15-03 A7-RC	REVISED TITLE BLOCK ONLY.
E	01-29-03 A7-RMC	REVISED DRAWING NUMBER IN NOTES AND ADDED NOTE 10.
D	7-13-99 A3-RMC	REDRAWN.

SUPERSEDES DWG NO. 40-D-5762

UNITED STATES DEPARTMENT OF ENERGY
WESTERN AREA POWER ADMINISTRATION
CORPORATE SERVICES OFFICE - LAKEWOOD, COLORADO

TRANSMISSION LINE STANDARDS
STRUCTURE NUMBER SIGNS
DETAILS AND LOCATION

DESIGNED BUREC APPROVED ROSS M. CLARK
ELECTRICAL ENGINEERING MANAGER

C/A/E	AUGUST 6, 1979	41	9007

Mar 23, 2006- 11:15am Plotted By: Seela S:\Engineering\Standard Drawings\41\41_9007f.dwg Last Saved By: palmer IMAGES:

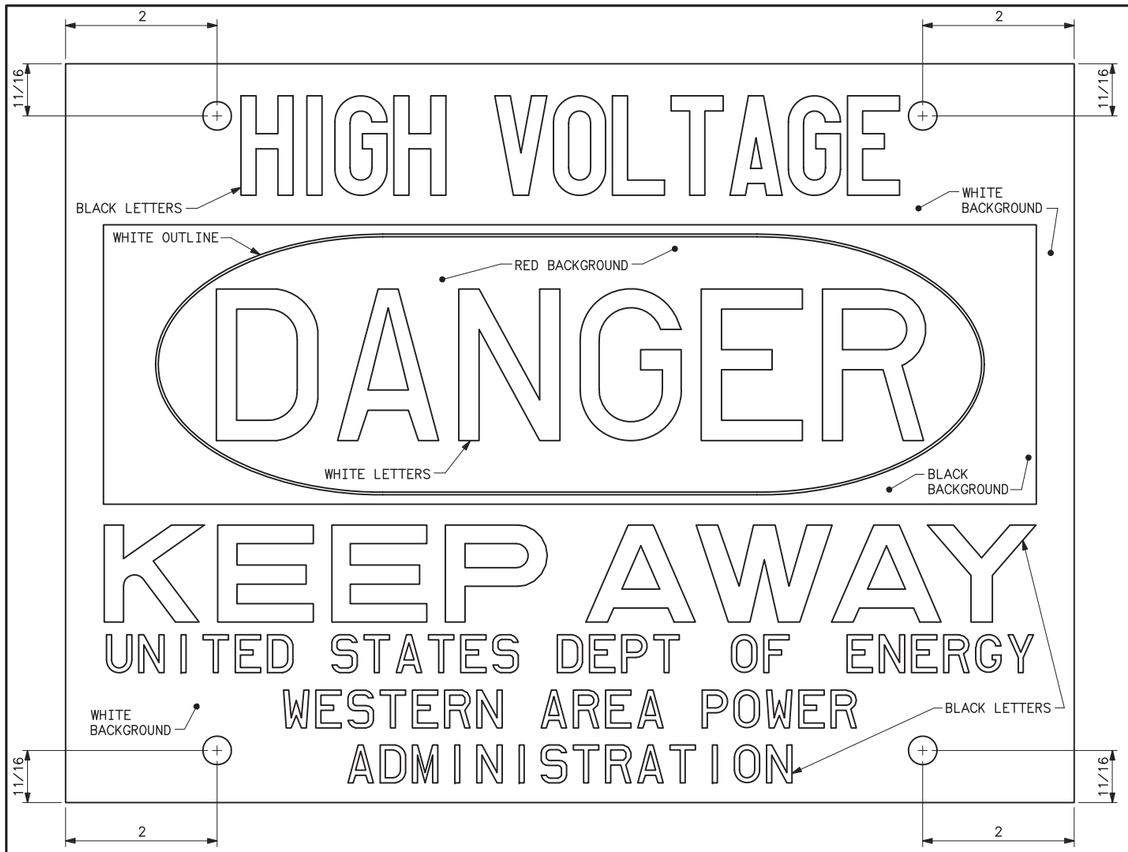

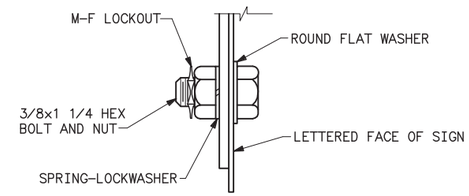

DETAIL A
SIGN MOUNTING HARDWARE

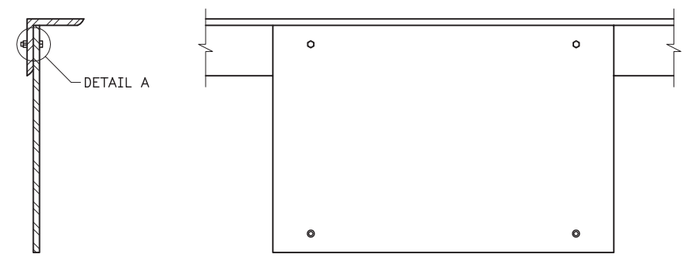

SIGN FASTENING DETAIL

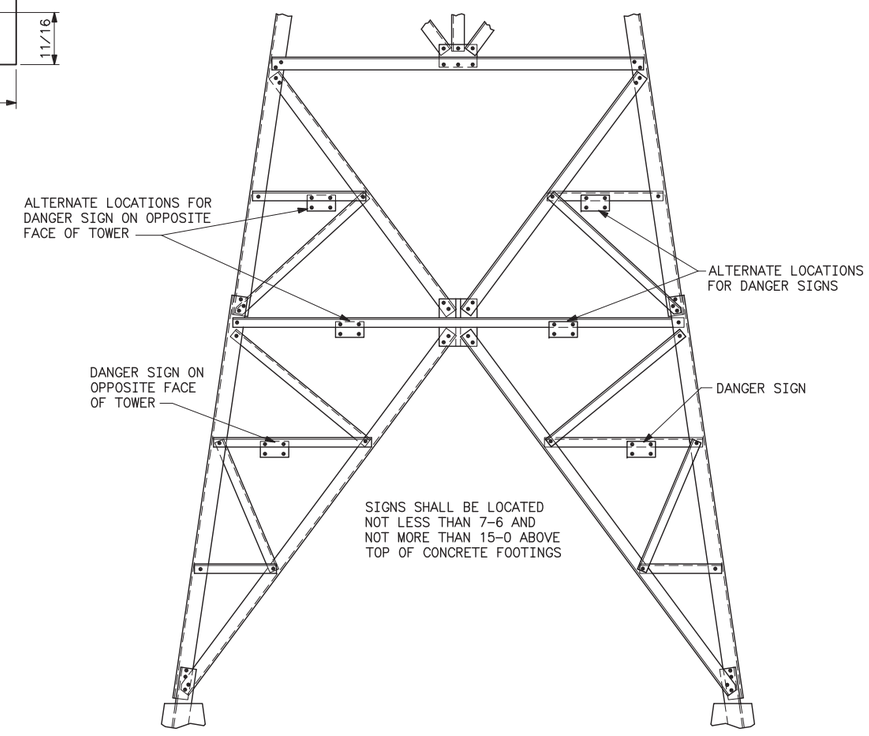

DANGER SIGN LOCATION

NOTES

1. SIGNS SHALL BE MADE OF NO. 16 US GAUGE SHEET STEEL. HEIGHT AND WIDTH DIMENSIONS MAY VARY FROM 10 TO 12 INCHES AND 14 TO 18 INCHES, RESPECTIVELY.
2. FINISH SHALL BE PORCELAIN ENAMEL.
3. EACH SIGN SHALL HAVE FOUR FINISHED HOLES LARGE ENOUGH TO TAKE 3/8 IN. BOLTS. HOLES IN SIGNS SHALL BE FITTED WITH BRASS EYELETS.
4. THE PORCELAIN ENAMEL SHALL BE IN ACCORDANCE WITH THE RECOMMENDED STANDARDS FOR MANUFACTURE OF PORCELAIN ENAMEL SIGNS (PEI:S-103) OF THE SIGN DIVISION OF THE PORCELAIN ENAMEL INSTITUTE, INC.
5. SIZE OF LETTERING AND BACKGROUND SHALL BE PROPORTIONAL TO THOSE SHOWN.
6. ALL FERROUS HARDWARE SHALL BE GALVANIZED.
7. SIGNS SHALL BE FASTENED BY MEANS OF EITHER THE TOP OR THE BOTTOM TWO HOLES.

E	7-15-03 A7-DH	REVISED TITLE BLOCK ONLY.
D	10-2-95 A2-CG	REDRAWN. REVISED TO ADD LOCATION OF SIGNS.

SUPERSEDES DWG NO. 41-9009 & 40-D-4387

UNITED STATES DEPARTMENT OF ENERGY
WESTERN AREA POWER ADMINISTRATION
CORPORATE SERVICES OFFICE - LAKEWOOD, COLORADO

TRANSMISSION LINE STANDARDS
LATTICE TOWERS
DANGER SIGNS
DETAILS AND LOCATIONS

DESIGNED CHARLIE GARCIA APPROVED DOUG HANSON
CIVIL ENGINEERING MANAGER

A	OCTOBER 2, 1995	41	9008

Mar 23, 2006- 11:15am Plotted By: Seelo S:\Engineering\Standard Drawings\41\41_9008e.dwg Last Saved By: palmer IMAGES:

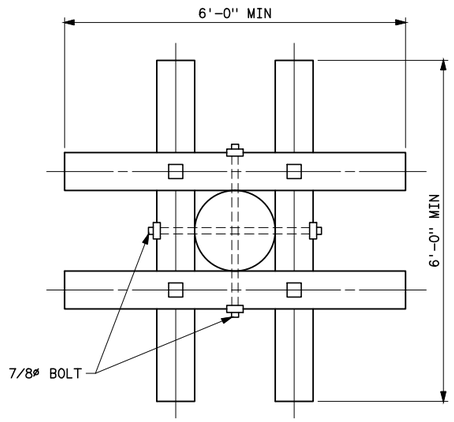

TOP VIEW OF BOG SHOE

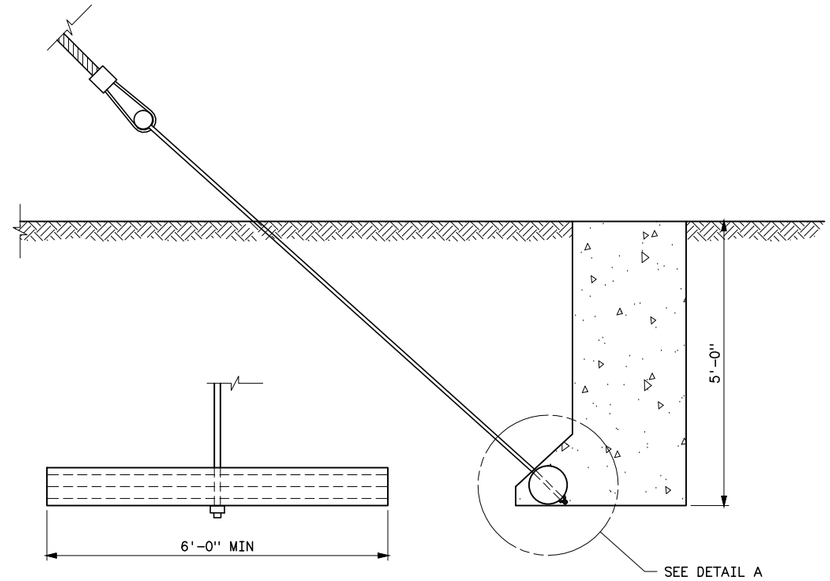

BOG ANCHOR

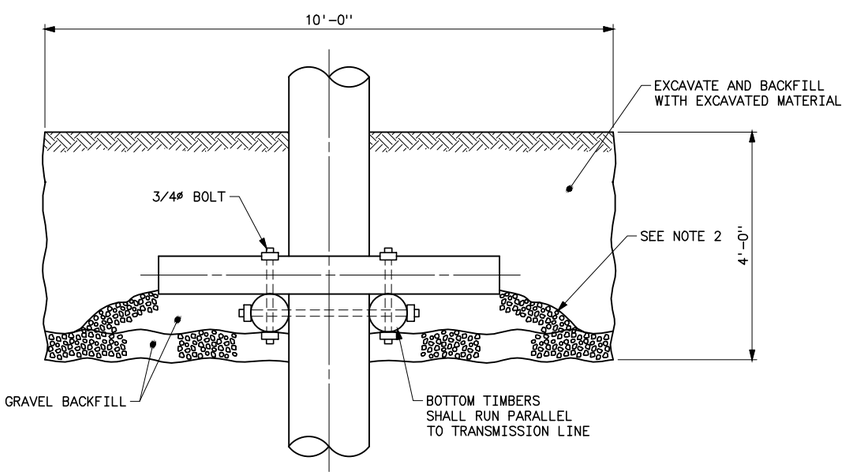

BOG SHOE

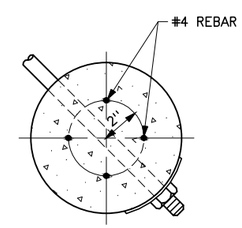

DETAIL A

ALUMINUM DISC
(SEE NOTE 5 AND 6)

LIST OF MATERIALS

BOG SHOE	
NO. REQD	DESCRIPTION
4	BOG SHOE, WOOD, 8x6-0
2	7/8x42 DOUBLE ARMING BOLT
12	4x4x1/4 SQUARE CURVED WASHER
4	3/4x24 DOUBLE ARMING BOLT

BOG ANCHOR	
NO. REQD	DESCRIPTION
1	CONCRETE ANCHOR
1	ANCHOR ROD, 3/4x8-0
1	3x3x1/4 CURVED WASHER, GALVANIZED
4	#4 REINFORCING BARS PER DETAIL A

NOTES

1. BOG SHOES SHALL BE PACIFIC COAST DOUGLAS FIR AND SHALL HAVE A MINIMUM OF 6 FEET IN LENGTH BY 8 INCHES IN DIAMETER AND SHALL HAVE THE SAME FULL-LENGTH PRESSURE PRESERVATIVE TREATMENT AS THAT REQUIRED FOR THE POLES.
2. BOTTOM AND TOP TIMBERS SHALL BE PLACED ON LEVEL BEARING SURFACES.
3. TREAT ALL FIELD DRILLED HOLES IN ACCORDANCE WITH THE SPECIFICATIONS.
4. BOG ANCHORS SHALL BE REINFORCED CONCRETE WITH A MINIMUM SIZE OF 6 FEET IN LENGTH BY 8 INCHES IN DIAMETER.
5. POLES WITH BOG SHOES OR BOG ANCHORS INSTALLED SHALL BE TAGGED WITH 24 GAGE, 2 INCHES DIAMETER, ALUMINUM DISCS. THE DISCS SHALL BE ATTACHED WITH TWO 2 INCH ALUMINUM TWIST NAILS. ALTERNATE TAGS MAY BE SUBMITTED FOR APPROVAL BY CONTRACTOR. TAGS SHALL BE MOUNTED APPROXIMATELY 5 FEET ABOVE THE GROUNDLINE.
6. THE DISCS FOR POLES WITH BOG SHOES SHALL BE EMBOSSED WITH A BS AND THE DISCS FOR POLES WITH BOG ANCHORS SHALL BE EMBOSSED WITH A BA ALONG WITH THE YEAR INSTALLED.
7. GRAVEL SHALL BE PIT-RUN, FREE-DRAINING MATERIAL WITH A MAXIMUM SIZE OF 2 1/2 INCHES.

C	7-15-03 A7-RC	REVISED TITLE BLOCK ONLY.
B	2-7-95 A2-RMC	REVISED AND REDRAWN ON CAE.

UNITED STATES DEPARTMENT OF ENERGY
WESTERN AREA POWER ADMINISTRATION
CORPORATE SERVICES OFFICE - LAKEWOOD, COLORADO

TRANSMISSION LINE STANDARDS
WOOD POLE STRUCTURES
BOG SHOE AND BOG ANCHOR

DESIGNED K.K. ROWE APPROVED ROSS CLARK
CHIEF, TRANSMISSION LINE BRANCH

C A F	JULY 17, 1980	41	9019

Sep 29, 2016- 9:44am Plotted By: Seela S:\specifications\2016 Substation and T-Line\Standard Drawings\41_9019c.dwg Last Saved By: polmer IMAGES:

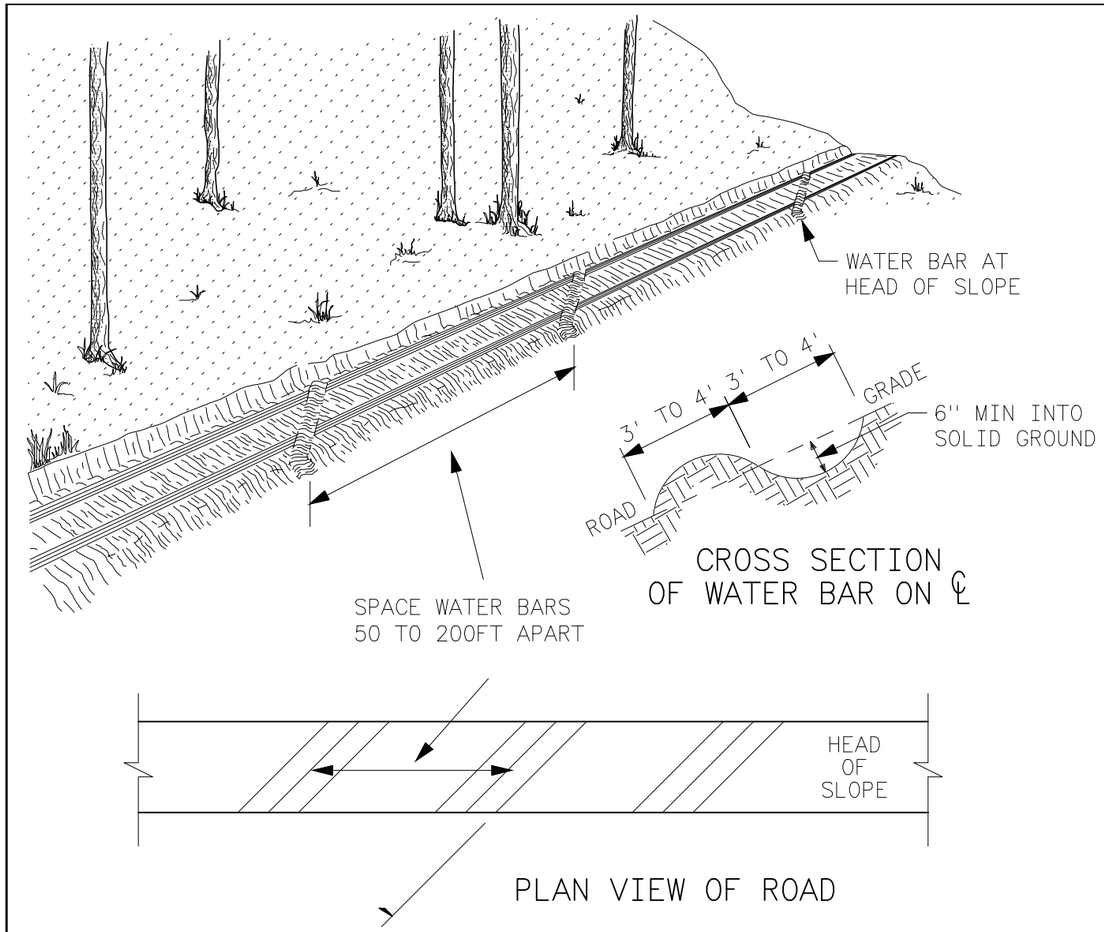

A	7-15-03 A7-DH	REVISED TITLE BLOCK ONLY.

UNITED STATES DEPARTMENT OF ENERGY
WESTERN AREA POWER ADMINISTRATION
CORPORATE SERVICES OFFICE - LAKEWOOD, COLORADO

TRANSMISSION LINE STANDARDS
ACCESS ROAD REHABILITATION
WATER BAR CONSTRUCTION

DESIGNED KAREN ROWE APPROVED DOUG HANSON
CIVIL ENGINEERING MANAGER

CAE	DECEMBER 31, 1996	41	9021

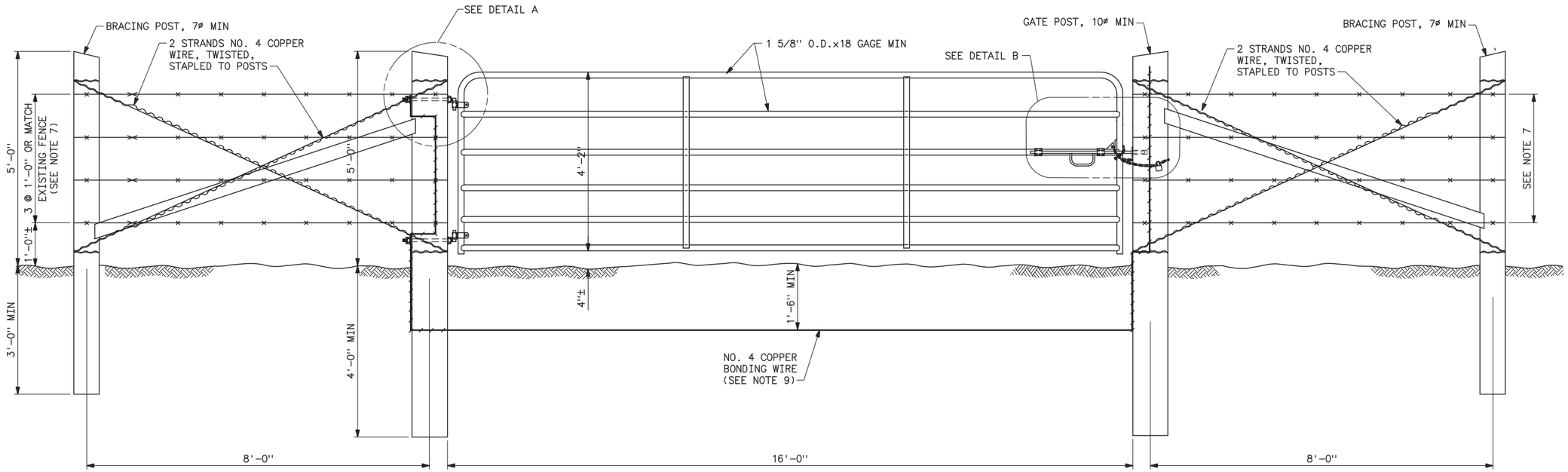

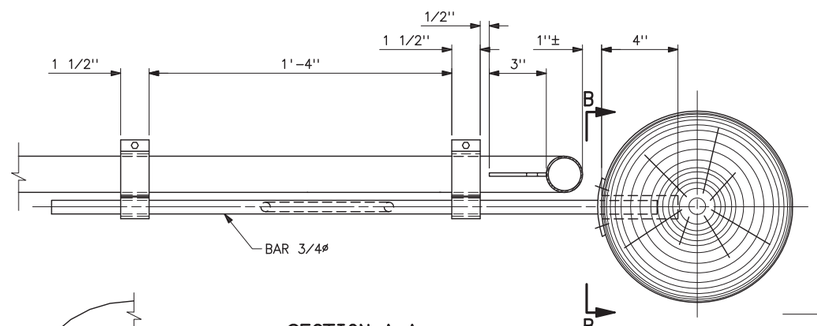

SECTION A-A

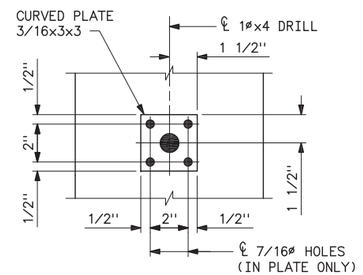

SECTION B-B

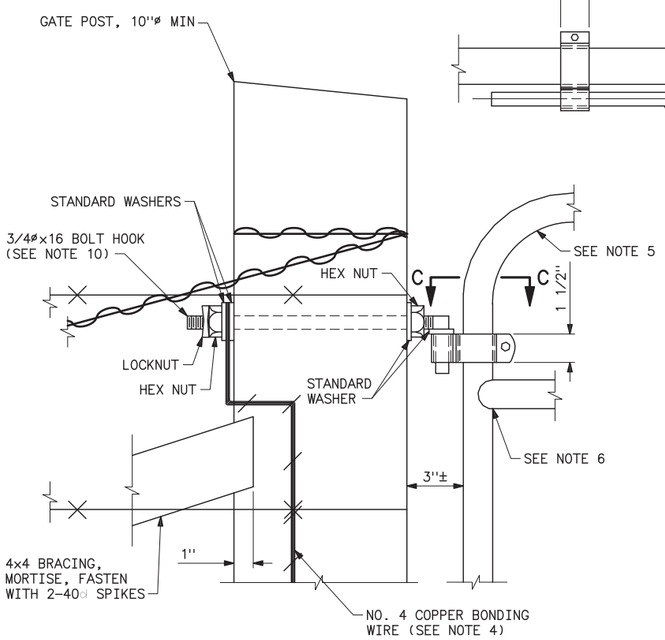

DETAIL A

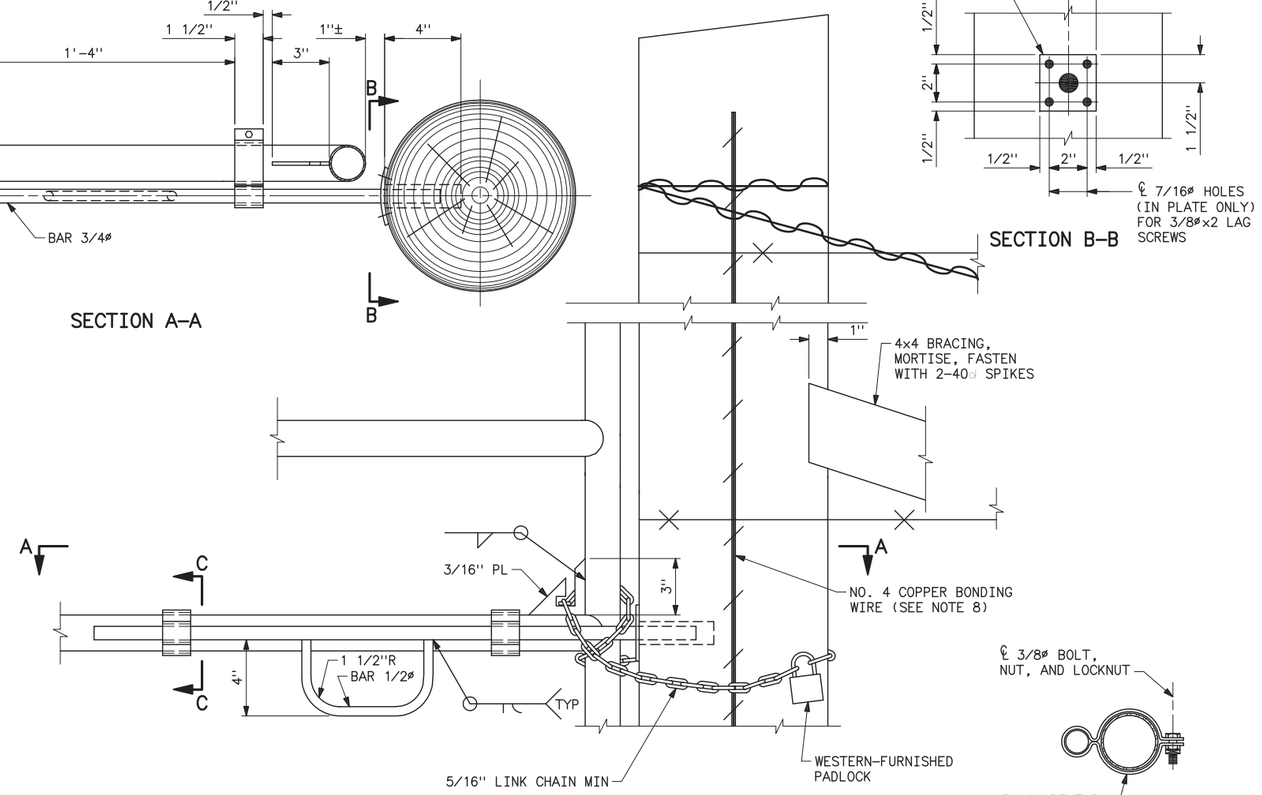

DETAIL B

SECTION C-C

NOTES

1. GATE CONSTRUCTION INCLUDES POSTS AND BRACING.
2. GATE, HARDWARE, AND WIRE SHALL BE ZINC COATED.
3. POSTS AND BRACING SHALL BE PRESSURE-TREATED TIMBER.
4. CONNECT BONDING WIRE TO TOP AND BOTTOM BOLT HOOKS AND STAPLE INTERSECTIONS OF FENCE WIRE AND BONDING WIRE TO GATE POSTS FOR ELECTRICAL GROUNDING.
5. DIAMETER OF TUBING SHALL BE APPROXIMATELY MAINTAINED WHEN BENDING TOP TWO CORNERS OF OUTSIDE GATE FRAME.
6. INTERIOR CROSS TUBES SHALL BE MITERED TO OUTSIDE GATE FRAME.
7. CONNECT EACH NEW FENCE WIRE TO EXISTING FENCE WIRE FOR ELECTRICAL GROUNDING.
8. STAPLE INTERSECTIONS OF FENCE WIRE AND COPPER BONDING WIRE TO GATE POSTS FOR ELECTRICAL GROUNDING.
9. INSTALL BOTTOM COPPER BONDING WIRE BETWEEN GATE POSTS ONLY IF GATE IS WITHIN A FENCE WHICH CROSSES UNDER OR IS PARALLEL TO AND WITHIN 150 FEET OF TRANSMISSION LINE CENTERLINE.
10. INSTALL TOP BOLT HOOK POINTING UPWARD OR DOWNWARD, AS DIRECTED BY THE COR.

D	8-1-05 A7-DH	CHANGED GALVANIZED WIRE TO COPPER AND REVISED NOTES 8, 9, AND 10.
C	7-15-03 A7-DH	REVISED TITLE BLOCK ONLY.
B	8-26-94 A2-WCC	MINOR REVISIONS.
A	3-22-94 A2-WCC	ADDED BURIED BONDING WIRE. MINOR REVISIONS.

UNITED STATES DEPARTMENT OF ENERGY
WESTERN AREA POWER ADMINISTRATION
CORPORATE SERVICES OFFICE – LAKEWOOD, COLORADO

TRANSMISSION LINE STANDARDS

PREFABRICATED TUBULAR STEEL GATE

DESIGNED B.G. HAGLER APPROVED G.O. THOMAS
DIRECTOR, DIVISION OF TRANSMISSION LINE AND BUILDING DESIGN

CAD	JANUARY 23, 1991	41	9024

Mar 23, 2006- 11:15am Plotted By:Seela IMAGES:
P:\41_19024c.dwg Last Saved By: Dave Sanchez on Jun 17, 2005- 12:22pm

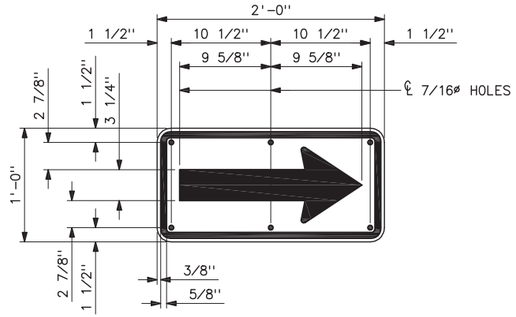

WARNING ARROW

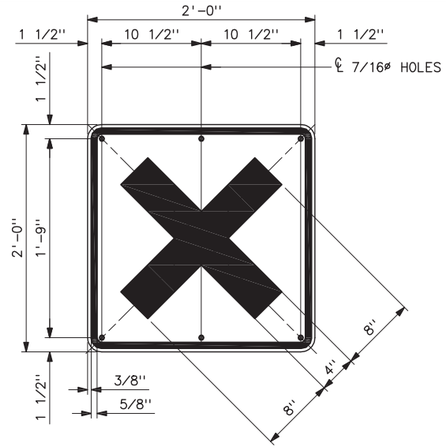

WARNING "X"

AERIAL PATROL WARNING SIGNS

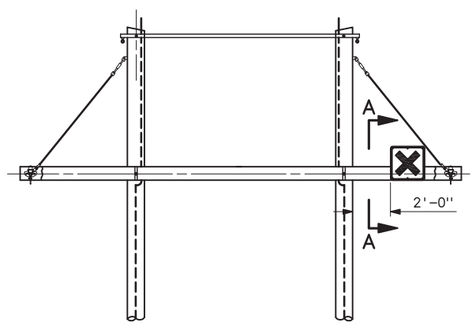

H-FRAME STRUCTURE

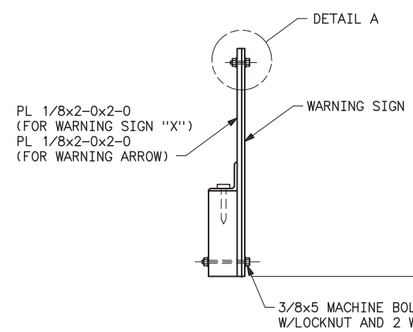

SECTION A-A

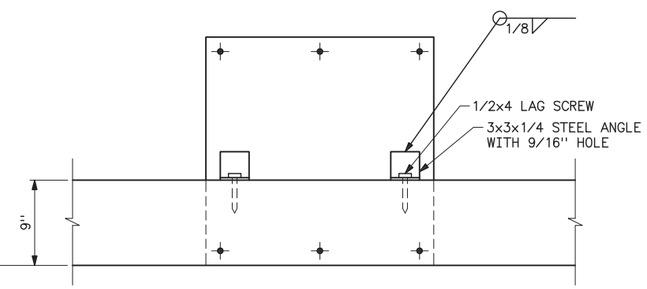

NOTES

1. WARNING "X" SIGN SHALL BE STANDARD UNITED STATES DEPARTMENT OF TRANSPORTATION (DOT) FEDERAL HIGHWAY SIGN, DESIGNATION W2-1, TURNED ONE-FOURTH OF A TURN TO BECOME AN "X".
2. WARNING ARROW SIGN SHALL BE STANDARD DOT SIGN DESIGNATION W1-6.
3. SIGNS SHALL BE MADE OF NO. 18 U.S. GAGE SHEET METAL.
4. FINISH SHALL BE PORCELAIN ENAMEL. BACKGROUND SHEETING COLOR SHALL BE ENGINEER GRADE YELLOW IN ACCORDANCE WITH ASTM D 4956-94. "X" OR ARROW SHALL BE BLACK.
5. EACH SIGN SHALL HAVE HOLES FITTED WITH BRASS EYELETS. FINISHED HOLES SHALL BE LARGE ENOUGH TO TAKE 3/8-INCH BOLTS.
6. MOUNTING PLATES SHALL CONFORM TO ASTM A 36.
7. ALL ATTACHMENT HARDWARE SHALL BE GALVANIZED.
8. HOLES THROUGH CROSSARM SHALL BE FIELD DRILLED 1/8 INCH LARGER THAN BOLT DIAMETER.
9. CLEARANCE SHALL BE MAINTAINED BETWEEN AERIAL WARNING SIGNS AND ALL GUYS AND GROUNDING HARDWARE.
10. FOR STRUCTURE LOCATIONS AND REQUIRED TYPE OF WARNING SIGN, SEE SPECIFICATIONS AND PLAN AND PROFILE DRAWINGS.

REFERENCE DRAWING

AERIAL PATROL WARNING SIGNS AND MARKER BALL MARKING DIAGRAMS_____41 9029

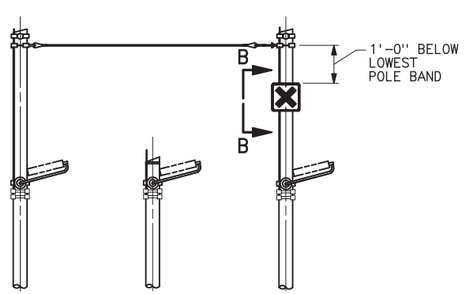

3-POLE STRUCTURE
(SIMILAR FOR 1-POLE STRUCTURES)

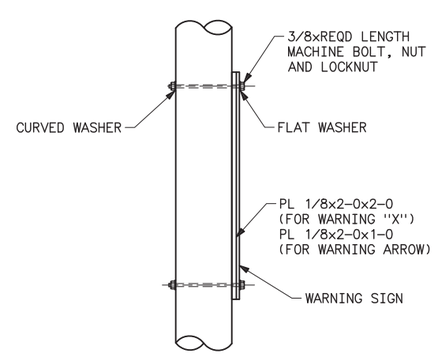

SECTION B-B

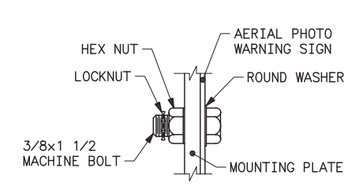

DETAIL A

C	7-15-03 A7-RC	REVISED TITLE BLOCK ONLY.
B	11-7-00 A3-RMC	ADDED REFERENCE DRAWING
A	11-17-95 A2-RMC	UPDATED SIGN DETAILS TO NEW STANDARD

UNITED STATES DEPARTMENT OF ENERGY
WESTERN AREA POWER ADMINISTRATION
CORPORATE SERVICES OFFICE - LAKEWOOD, COLORADO

TRANSMISSION LINE STANDARDS
WOOD POLE STRUCTURES
AERIAL PATROL WARNING SIGNS DETAILS AND LOCATIONS

DESIGNED K. ROWE _____ APPROVED ROSS CLARK _____
CHIEF, TRANSMISSION LINE BRANCH

C A F	AUGUST 21, 1995	41	9026

Mar 23, 2006- 11:16am Plotted By: Seela S:\Engineering\Standard Drawings\41\41_9026c.dwg Last Saved By: palmer IMAGES:

THIS SHEET COVERS AERIAL PATROL MILE MARKER SIGNS AND MOUNTING PLATES FOR NEW STRUCTURES

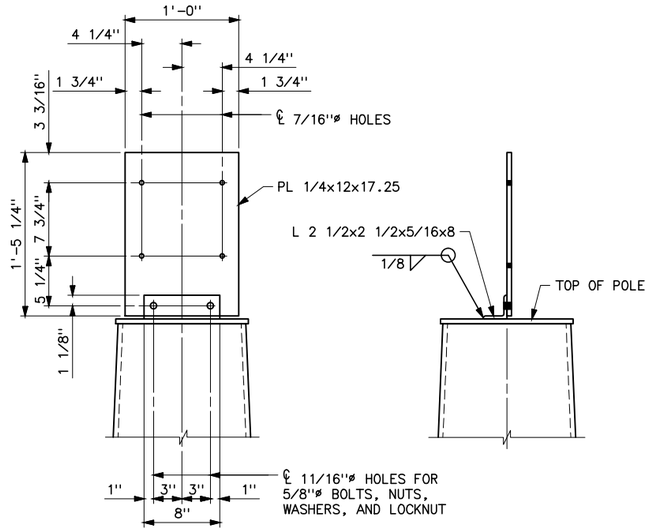

AERIAL PATROL MILE MARKER SIGN MOUNTING PLATE

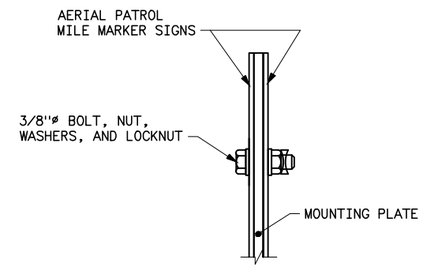

AERIAL PATROL
MILE MARKER SIGN

ATTACHMENT DETAILS
NOTE 7

NOTES

1. AERIAL PATROL MILE MARKER SIGNS SHALL BE NO 18 U.S. GAGE SHEET STEEL.
2. FINISH FOR SIGNS SHALL BE PORCELAIN ENAMEL. BACKGROUND COLOR SHALL BE YELLOW AND FIGURES SHALL BE BLACK.
3. PORCELAIN ENAMEL SHALL BE IN ACCORDANCE WITH THE RECOMMENDED STANDARDS FOR MANUFACTURE OF PORCELAIN ENAMEL SIGNS (PEI: S-103) OF THE SIGN DIVISION OF THE PORCELAIN ENAMEL INSTITUTE, INC.
4. FIGURES SHALL BE "BLOCK" TYPE.
5. HOLES IN SIGNS SHALL BE FURNISHED AND FITTED WITH BRASS EYELETS.
6. AERIAL PATROL MILE MARKER SIGN MOUNTING PLATES SHALL BE THE SAME TYPE OF MATERIAL AND FINISH AS THE STEEL POLE.
7. INSTALL TWO AERIAL PATROL MILE MARKER SIGNS ON THE FIRST STRUCTURE OF EACH MILE SECTION. MOUNTING PLATE SHALL BE PERPENDICULAR TO THE DIRECTION OF THE TRANSMISSION LINE. MOUNT SIGNS BACK-TO-BACK ON MOUNTING PLATE.
8. DRAWING 41 9027-2 COVERS DETAILS FOR STRUCTURE NUMBER SIGNS AND MOUNTING PLATES FOR NEW STRUCTURES.
9. DRAWING 41 9027-3 COVERS DETAILS FOR STRUCTURE NUMBER SIGNS AND MOUNTING PLATES FOR EXISTING STRUCTURES TO BE RETROFITTED.

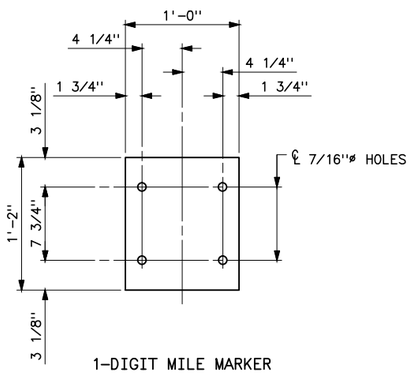

1-DIGIT MILE MARKER

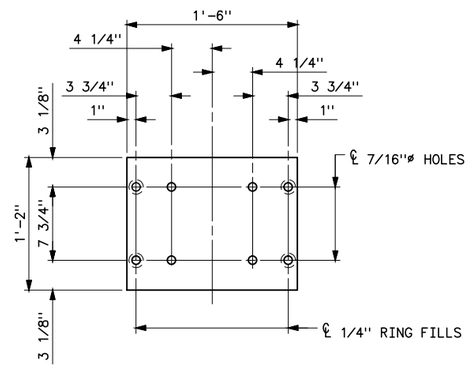

2-DIGIT MILE MARKER

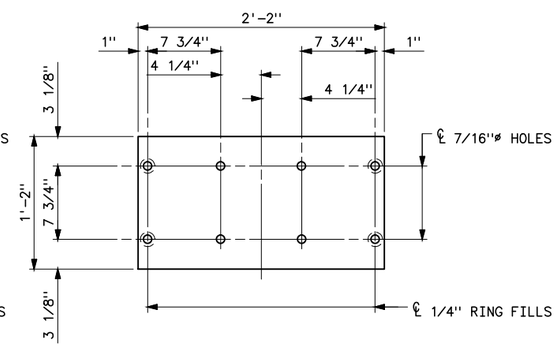

3-DIGIT MILE MARKER

AERIAL PATROL MILE MARKER SIGNS

REFERENCE DRAWINGS

AERIAL PATROL MILE MARKER AND STRUCTURE NUMBER SIGNS (SHEET 2 OF 3)_____41 9027-2
AERIAL PATROL MILE MARKER AND STRUCTURE NUMBER SIGNS (SHEET 3 OF 3)_____41 9027-3

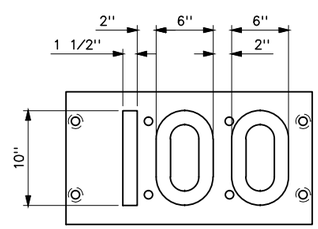

LETTERING TO BE CENTERED HORIZONTALLY AND VERTICALLY

AERIAL PATROL MILE MARKER SIGN LETTER DIMENSIONS

A	07-19-16 A7-BGH	REVISED TITLE BLOCK. ADDEDNOTES 8 AND 9. ADDED REFERENCE DRAWINGS.

SUPERSEDES DWG NO. 41 9027E (IN PART)

UNITED STATES DEPARTMENT OF ENERGY
WESTERN AREA POWER ADMINISTRATION
HEADQUARTERS - LAKEWOOD, COLORADO

TRANSMISSION LINE STANDARDS
STEEL POLE STRUCTURES
AERIAL PATROL MILE MARKER
AND STRUCTURE NUMBER SIGNS (SH. 1 OF 3)

DESIGNED BOBBY HAGLER, P.E. APPROVED DOUG HANSON CIVIL ENGINEERING MANAGER

CAD	NOVEMBER 18, 2015	41	9027-1

Plotted By:ahagler Jul 20, 2016- 10:39am IMAGES:
P:\ahagler\41_9027_1a.dwg Last Saved By: Hagler, Bobby on 7/20/2016 10:39 AM
XREF(S):

THIS SHEET COVERS STRUCTURE NUMBER SIGNS AND MOUNTING PLATES FOR NEW STRUCTURES

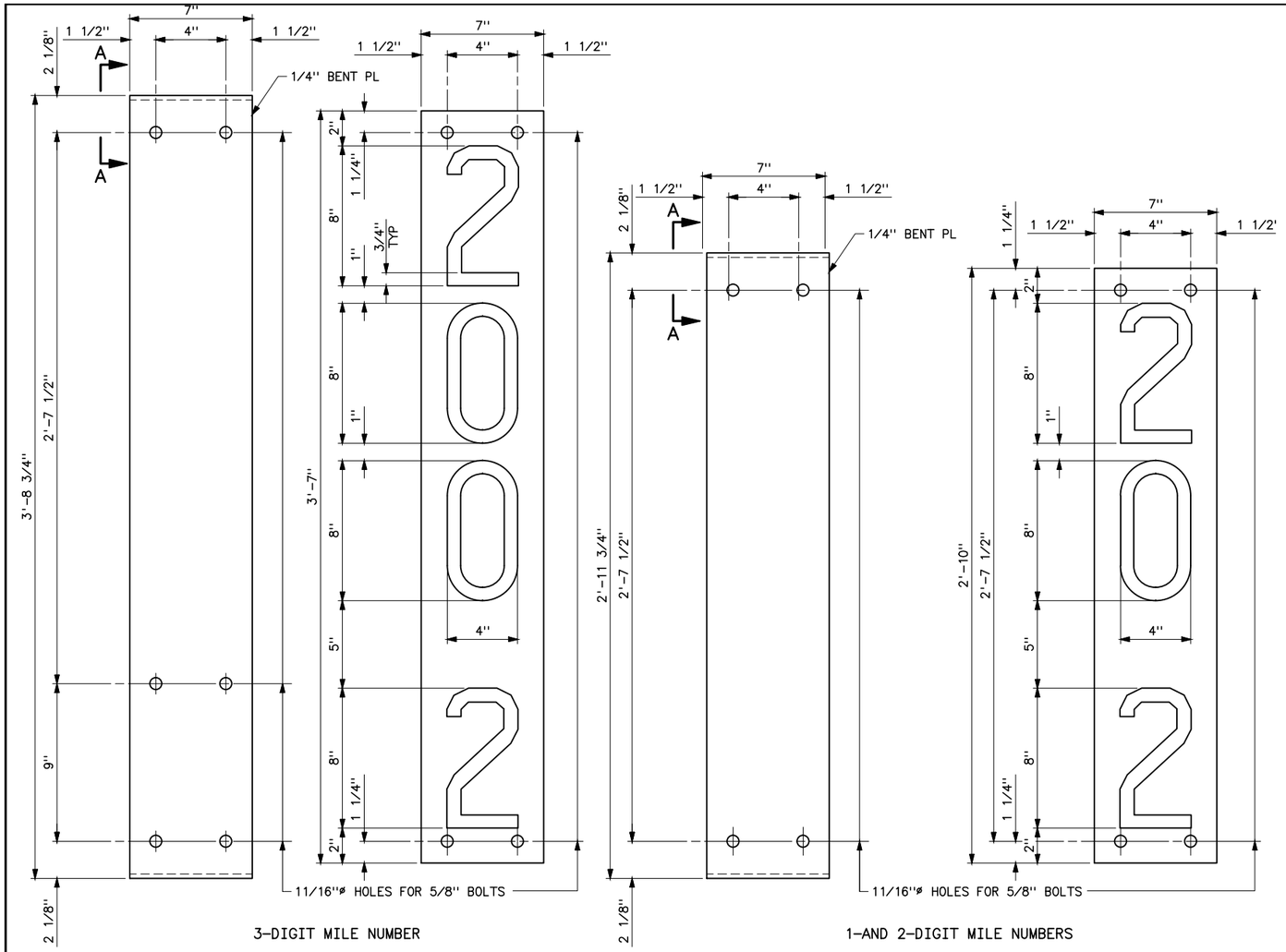

STRUCTURE NUMBER SIGNS, LETTER DIMENSIONS, AND MOUNTING PLATES

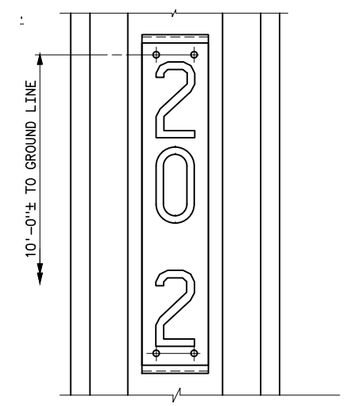

STRUCTURE NUMBER SIGN LOCATION
(NOT TO SCALE)

NOTES

1. STRUCTURE NUMBER SIGNS SHALL BE NO 18 U.S. GAGE SHEET STEEL.
2. FINISH FOR STRUCTURE NUMBER SIGNS SHALL BE PORCELAIN ENAMEL. BACKGROUND COLOR SHALL BE YELLOW AND FIGURES SHALL BE BLACK.
3. PORCELAIN ENAMEL SHALL BE IN ACCORDANCE WITH THE RECOMMENDED STANDARDS FOR MANUFACTURE OF PORCELAIN ENAMEL SIGNS (PEI: S-103) OF THE SIGN DIVISION OF THE PORCELAIN ENAMEL INSTITUTE, INC.
4. FIGURES SHALL BE "BLOCK" TYPE.
5. HOLES IN SIGNS SHALL BE FURNISHED AND FITTED WITH BRASS EYELETS.
6. STRUCTURE NUMBER SIGN BACKER PLATES SHALL BE THE SAME TYPE OF MATERIAL AND FINISH AS THE STEEL POLE.
7. INSTALL STRUCTURE NUMBER SIGNS ON BOTH THE AHEAD AND BACK SPAN SIDE OF EACH STRUCTURE.
8. FOR STRUCTURE NUMBER SIGNS REQUIRING 5 DIGITS; E.G., 135/2A, DIMENSIONS FOR FIGURES SHALL BE 4" WIDE BY 6 1/4" HIGH IN LIEU OF 4" WIDE BY 8" HIGH. 5-DIGIT SIGN DIMENSIONS SHALL BE IN ACCORDANCE WITH THE 3-DIGIT MILE NUMBER DETAIL.
10. DRAWING 41 9027-1 COVERS DETAILS FOR AERIAL PATROL MILE MARKER SIGNS AND MOUNTING PLATES.
11. DRAWING 41 9027-3 COVERS DETAILS FOR STRUCTURE NUMBER SIGNS AND MOUNTING PLATES FOR EXISTING STRUCTURES TO BE RETROFITTED.

REFERENCE DRAWINGS

AERIAL PATROL MILE MARKER AND STRUCTURE NUMBER SIGNS (SHEET 1 OF 3)_____41 9027-1
AERIAL PATROL MILE MARKER AND STRUCTURE NUMBER SIGNS (SHEET 3 OF 3)_____41 9027-3

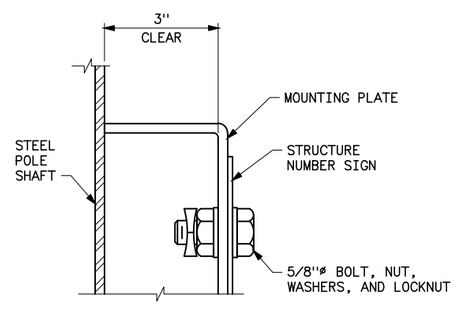

SECTION A-A
MOUNTING PLATE
FOR NEW STRUCTURES

ATTACHMENT DETAILS

A	07-19-16 A7-BGH	REVISED TITLE BLOCK. ADDEDNOTES 10 AND 11. ADDED REFERENCE DRAWINGS.

SUPERSEDES DWG NO. 41 9027E (IN PART)

UNITED STATES DEPARTMENT OF ENERGY
WESTERN AREA POWER ADMINISTRATION
HEADQUARTERS - LAKEWOOD, COLORADO

TRANSMISSION LINE STANDARDS
STEEL POLE STRUCTURES
AERIAL PATROL MILE MARKER
AND STRUCTURE NUMBER SIGNS (SH. 2 OF 3)

DESIGNED BOBBY HAGLER, P.E. APPROVED DOUG HANSON CIVIL ENGINEERING MANAGER

CAE	NOVEMBER 18, 2015	41	9027-2

Plotted By:ahagler Jul 29, 2016- 9:25am
IMAGES:
P:\ahagler\41_9027_2a.dwg Last Saved By: Hagler, Bobby on 7/29/2016 9:24 AM

THIS SHEET COVERS STRUCTURE NUMBER SIGNS AND MOUNTING PLATES FOR EXISTING STRUCTURES

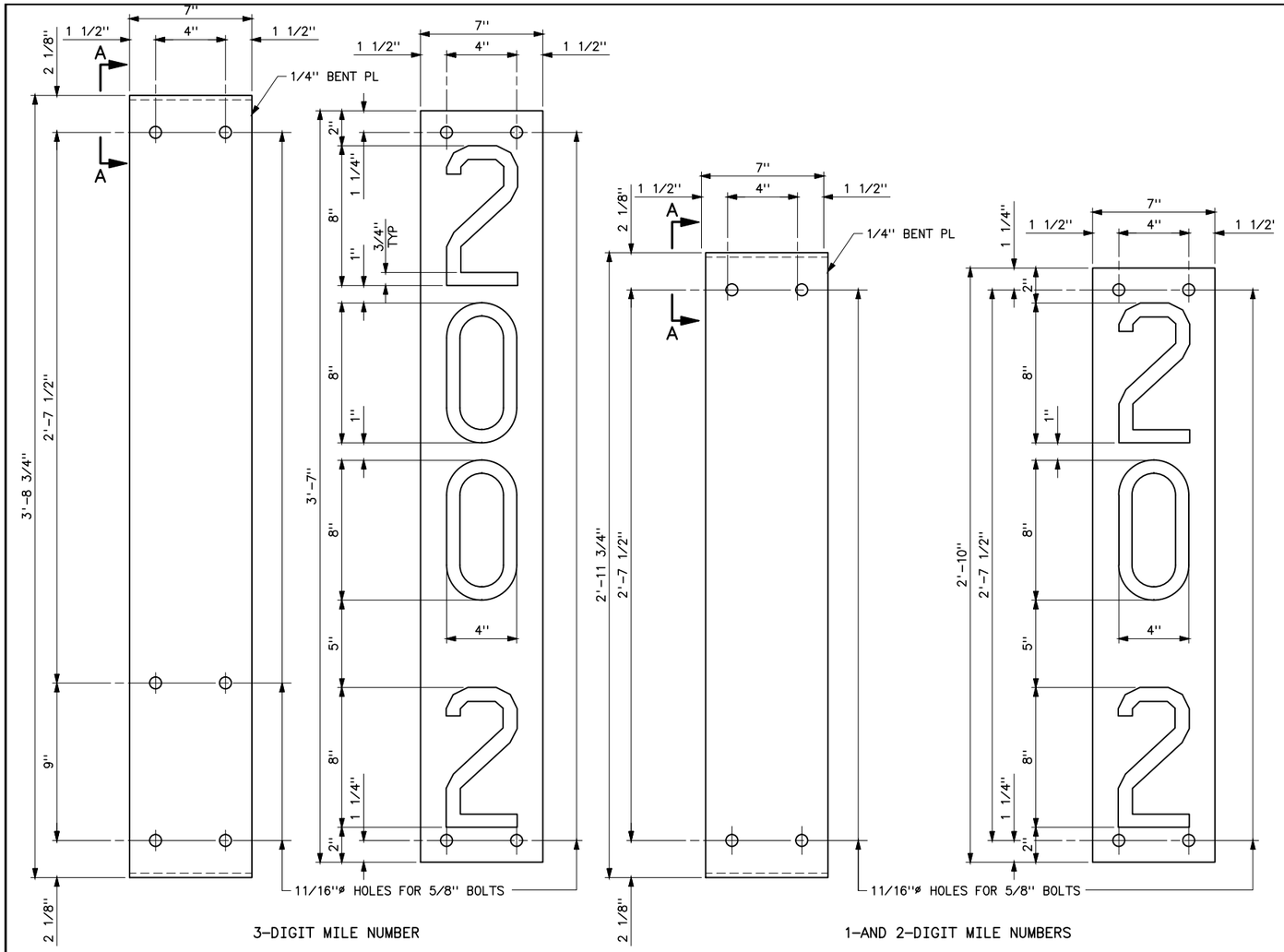

STRUCTURE NUMBER SIGNS, LETTER DIMENSIONS, AND MOUNTING PLATES

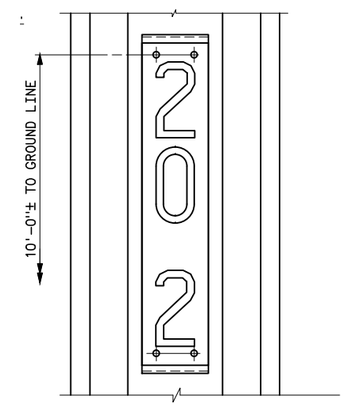

STRUCTURE NUMBER SIGN LOCATION
(NOT TO SCALE)

NOTES

1. STRUCTURE NUMBER SIGNS SHALL BE NO 18 U.S. GAGE SHEET STEEL.
2. FINISH FOR STRUCTURE NUMBER SIGNS SHALL BE PORCELAIN ENAMEL. BACKGROUND COLOR SHALL BE YELLOW AND FIGURES SHALL BE BLACK.
3. PORCELAIN ENAMEL SHALL BE IN ACCORDANCE WITH THE RECOMMENDED STANDARDS FOR MANUFACTURE OF PORCELAIN ENAMEL SIGNS (PEI: S-103) OF THE SIGN DIVISION OF THE PORCELAIN ENAMEL INSTITUTE, INC.
4. FIGURES SHALL BE "BLOCK" TYPE.
5. HOLES IN SIGNS SHALL BE FURNISHED AND FITTED WITH BRASS EYELETS.
6. STRUCTURE NUMBER SIGN BACKER PLATES SHALL BE THE SAME TYPE OF MATERIAL AND FINISH AS THE STEEL POLE.
7. INSTALL STRUCTURE NUMBER SIGNS ON BOTH THE AHEAD AND BACK SPAN SIDE OF EACH STRUCTURE.
8. FOR STRUCTURE NUMBER SIGNS REQUIRING 5 DIGITS; E.G., 135/2A, DIMENSIONS FOR FIGURES SHALL BE 4" WIDE BY 6 1/4" HIGH IN LIEU OF 4" WIDE BY 8" HIGH. 5-DIGIT SIGN DIMENSIONS SHALL BE IN ACCORDANCE WITH THE 3-DIGIT MILE NUMBER DETAIL.
9. FOR EXISTING STRUCTURES SECURE BACKER PLATE TO STRUCTURE WITH 1/2" STAINLESS STEEL BANDING AT TOP AND BOTTOM OF BACKER PLATES.
10. DRAWING 41 9027-1 COVERS DETAILS FOR AERIAL PATROL MILE MARKER SIGNS AND MOUNTING PLATES.
11. DRAWING 41 9027-2 COVERS DETAILS FOR STRUCTURE NUMBER SIGNS AND MOUNTING PLATES FOR NEW STRUCTURES.

REFERENCE DRAWINGS

AERIAL PATROL MILE MARKER AND STRUCTURE NUMBER SIGNS (SHEET 1 OF 3)_____41 9027-1
AERIAL PATROL MILE MARKER AND STRUCTURE NUMBER SIGNS (SHEET 2 OF 3)_____41 9027-2

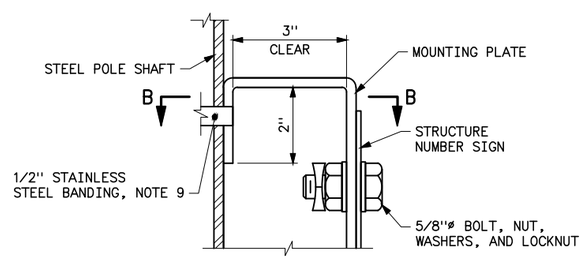

SECTION A-A (SIM)
MOUNTING PLATE FOR EXISTING STRUCTURES

ATTACHMENT DETAILS

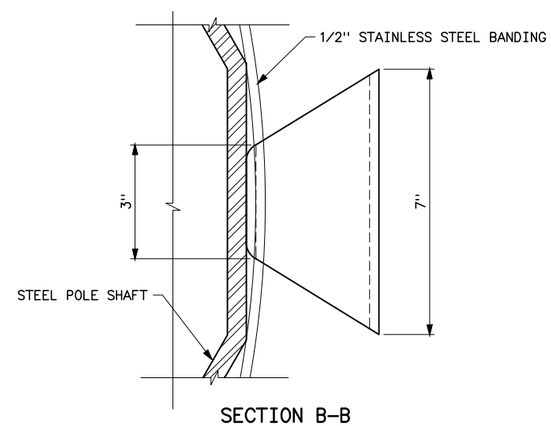

SECTION B-B

SUPERSEDES DWG NO. 41 9027E (IN PART)

UNITED STATES DEPARTMENT OF ENERGY
WESTERN AREA POWER ADMINISTRATION
HEADQUARTERS - LAKEWOOD, COLORADO

TRANSMISSION LINE STANDARDS
STEEL POLE STRUCTURES
AERIAL PATROL MILE MARKER
AND STRUCTURE NUMBER SIGNS (SH. 3 OF 3)

DESIGNED JEFFREY A. MILLER, P.E. APPROVED DOUG HANSON
CIVIL ENGINEERING MANAGER

C A E	JULY 19, 2016	41	9027-3

Plotted By:ahagler Aug 02, 2016- 9:32am
IMAGES:
P:\Ahagler\41_9027_3.dwg Last Saved By: Hagler, Bobby on 8/2/2016 9:31 AM

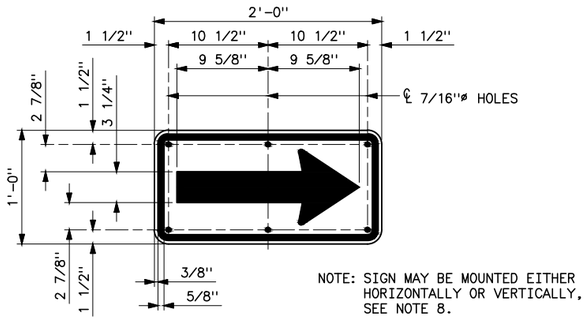

WARNING ARROW

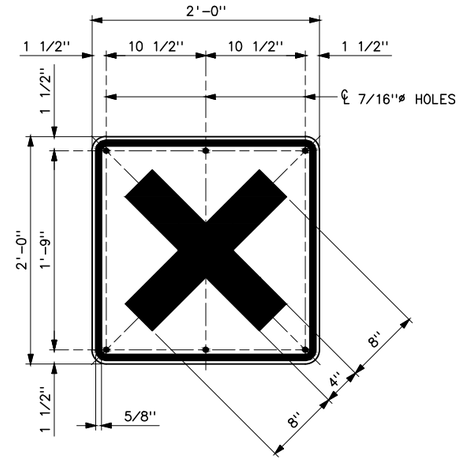

WARNING "X"

AERIAL PATROL WARNING SIGNS

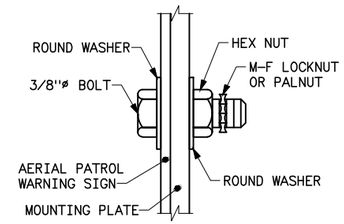

ATTACHMENT DETAIL

NOTES

1. WARNING "X" SIGN SHALL BE STANDARD UNITED STATES DEPARTMENT OF TRANSPORTATION (DOT) FEDERAL HIGHWAY SIGN, DESIGNATION W2-1, TURNED ONE-FOURTH OF A TURN TO BECOME AN "X".
2. WARNING ARROW SIGN SHALL BE STANDARD DOT SIGN DESIGNATION W1-6.
3. SIGNS SHALL BE NO. 18 U.S. GAGE SHEET STEEL.
4. FINISH FOR SIGNS SHALL BE PORCELAIN ENAMEL. BACKGROUND COLOR SHALL BE ENGINEER GRADE YELLOW IN ACCORDANCE WITH ASTM D 4956. "X" OR ARROW SHALL BE BLACK.
5. HOLES IN SIGNS SHALL BE FURNISHED AND FITTED WITH BRASS EYELETS. FINISHED HOLES SHALL BE LARGE ENOUGH TO TAKE 3/8" BOLT.
6. MOUNTING PLATES SHALL CONFORM TO ASTM A36, AND SHALL BE PERPENDICULAR TO THE DIRECTION OF TRANSMISSION LINE.
7. ALL ATTACHMENT HARDWARE SHALL BE GALVANIZED; EXCEPT ANGLES WELDED TO WEATHERING STEEL STRUCTURES SHALL CONFORM TO ASTM A242 OR ASTM A588.
8. FOR STRUCTURE LOCATIONS AND REQUIRED TYPE OF WARNING SIGN, SEE SPECIFICATIONS AND PLAN AND PROFILE DRAWINGS.

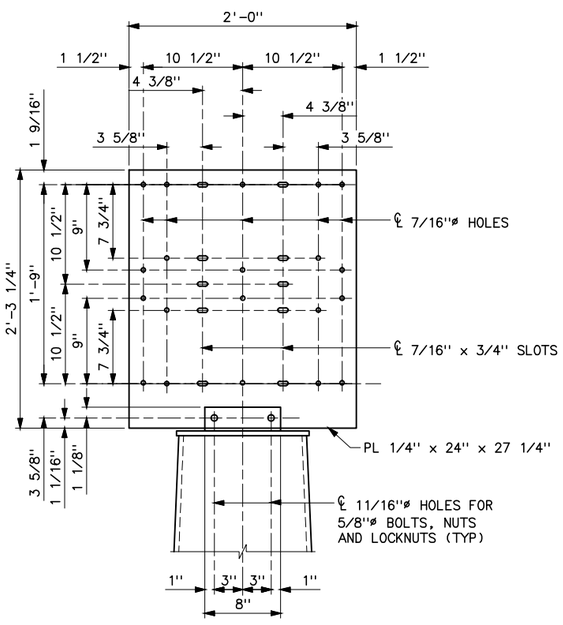

WARNING "X"

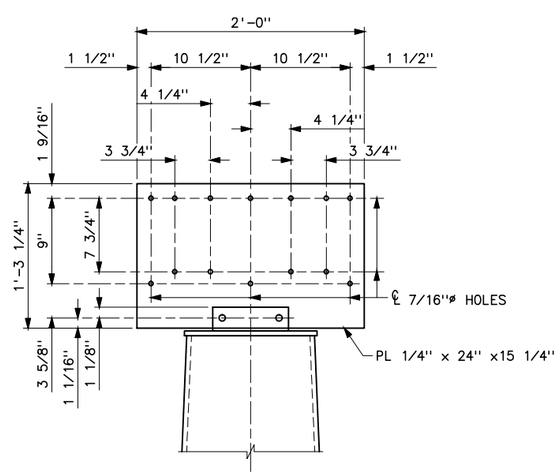

HORIZONTAL WARNING ARROW

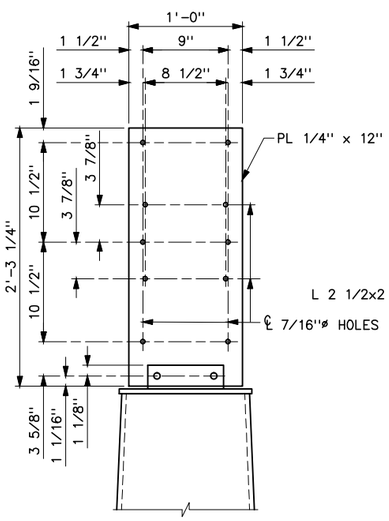

VERTICAL WARNING ARROW

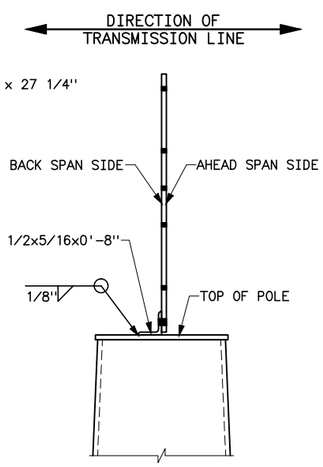

SIDE VIEW (TYPICAL)

AERIAL PATROL WARNING SIGN MOUNTING PLATES

REFERENCE DRAWINGS

AERIAL PATROL MILE MARKER AND STRUCTURE NUMBER SIGNS_____41 9027
AERIAL PATROL WARNING SIGNS AND MARKER BALL MARKING DIAGRAMS_____41 9029

E	1-9-15 A7-BGH	ADDED HOLES IN WARNING "X" MOUNTING PLATE TO ACCOMMODATE WARNING ARROW SIGNS.
D	4-22-09 A7-BGH	ADDED HOLES FOR AERIAL PATROL MILE MARKER SIGNS TO MOUNTING PLATES
C	7-15-03 A7-RC	REVISED TITLE BLOCK ONLY.
B	11-30-01 A7-BH	REVISED NOTE 6.
A	11-7-00 A3-RMC	ADDED REFERENCE DRAWING

UNITED STATES DEPARTMENT OF ENERGY
WESTERN AREA POWER ADMINISTRATION
CORPORATE SERVICES OFFICE - LAKEWOOD, COLORADO

TRANSMISSION LINE STANDARDS
STEEL POLE STRUCTURES
AERIAL PATROL WARNING SIGNS DETAILS AND LOCATIONS

DESIGNED BOBBY HAGLER _____ APPROVED ROSS CLARK _____
CHIEF, TRANSMISSION LINE BRANCH

A	DECEMBER 15, 1995	41	9028

Plotted By: lampman Mar 23, 2015- 2:17pm
IMAGES:
S:\projects\Misc\StandardDrawings\Drawings\DesignDrawings\x0wgsReadyForFinal\Scripts\41_9028e.dwg Last Saved By: Lampman, Eva (CONTR) on 3/23/2015 2:17 PM

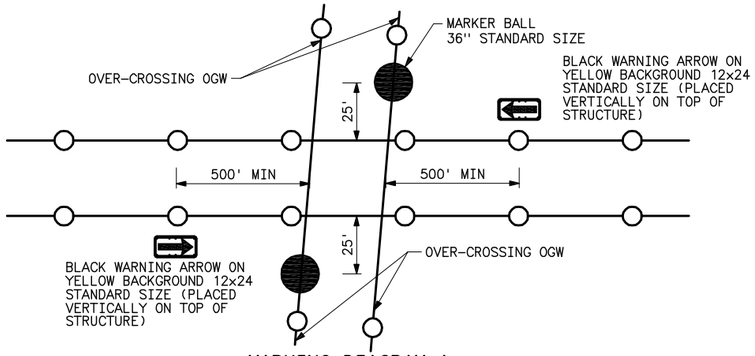

MARKING DIAGRAM-A
TWO MARKER SIGN SYSTEM
TRANSMISSION LINE OVER-CROSSING

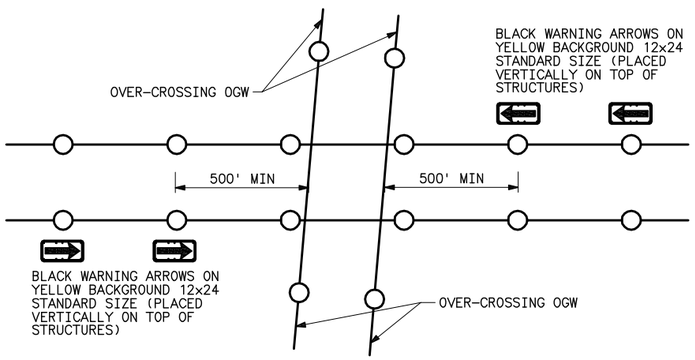

MARKING DIAGRAM-B
(WHEN PERMISSION TO INSTALL BALLS ON OVER-CROSSING IS NOT GRANTED BY OWNER.)
FOUR MARKER SIGN SYSTEM
TRANSMISSION LINE OVER-CROSSING

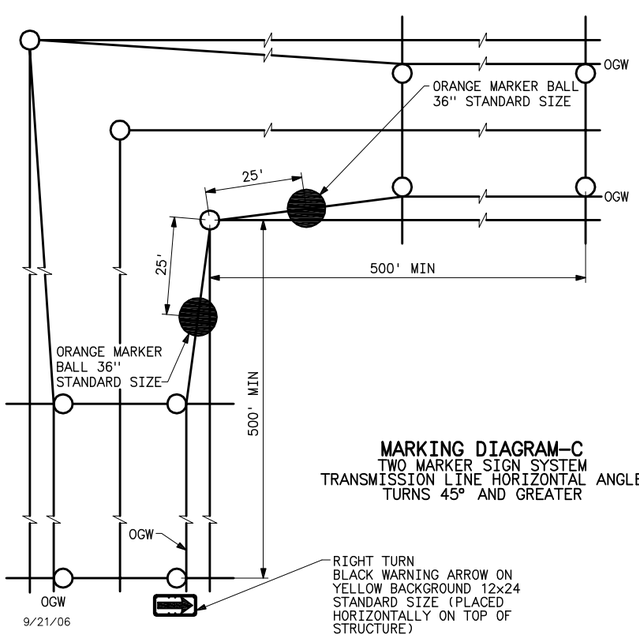

9/21/06

MARKING DIAGRAM-C
TWO MARKER SIGN SYSTEM
TRANSMISSION LINE HORIZONTAL ANGLE
TURNS 45° AND GREATER

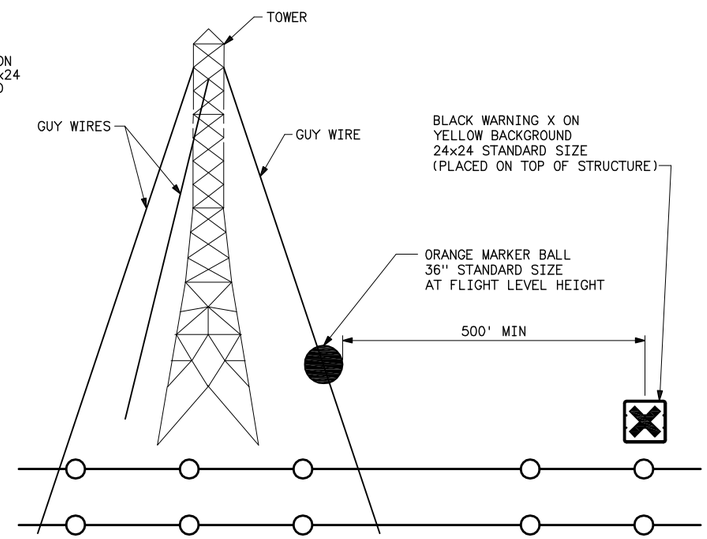

MARKING DIAGRAM-D
TWO MARKER SIGN SYSTEM
(ONE IN EACH APPROACH DIRECTION, AS SHOWN FOR ONE DIRECTION.)
TRANSMISSION LINE, OTHER HAZARDS

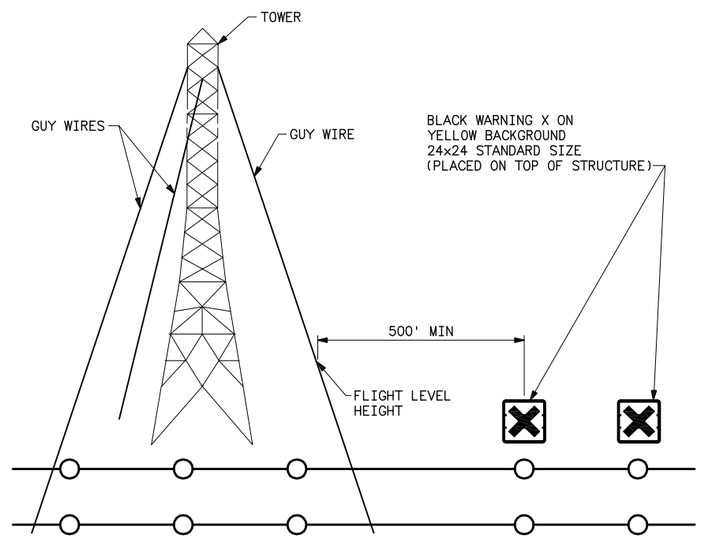

MARKING DIAGRAM-E
FOUR MARKER SIGN SYSTEM
(TWO IN EACH APPROACH DIRECTION, AS SHOWN FOR ONE DIRECTION.)
(WHEN PERMISSION TO INSTALL BALL ON GUY WIRE IS NOT GRANTED BY OWNER.)
TRANSMISSION LINE, OTHER HAZARDS

B	09/20/06 A7-BGH	REVISED WARNING "X" AND WARNING ARROW NOTES 1 AND 2.

TRANSMISSION LINE HAZARD MARKING SYSTEM

1. **GENERAL:**
DOE ORDER 5480.13A, 10.i., DATED 2-23-93, REQUIRES THAT DOE AND COVERED CONTRACTOR ORGANIZATIONS THAT CONDUCT POWERLINE PATROLS AT ALTITUDES OF LESS THAN 500 FEET ABOVE GROUND LEVEL(AGL) SHALL USE A SYSTEM OF WARNING SIGNS AND MARKING BALLS, TO ALERT PILOTS TO HAZARDS WITHIN POWERLINE RIGHT-OF-WAY.

DOE ORDER 5480.13A, 10.J., ALSO STATES THAT FAA ADVISORY CIRCULARS SHOULD BE USED TO THE EXTENT POSSIBLE IN AIRCRAFT AND FACILITY OPERATIONS. FAA ADVISORY CIRCULAR AC 70/7460-1H DESCRIBES FAA STANDARDS FOR MARKING AND LIGHTING STRUCTURES TO PROMOTE AVIATION SAFETY.

THE FOLLOWING TRANSMISSION LINE MARKING SYSTEM UTILIZES, TO THE MAXIMUM EXTENT POSSIBLE, THE SAFETY STANDARDS DESCRIBED IN ADVISORY CIRCULAR AC 70/7460-1H AND IS INTENDED TO PROVIDE WESTERN FIELD OFFICES WITH A STANDARDIZED METHOD FOR MARKING TRANSMISSION LINE SYSTEM HAZARDS.

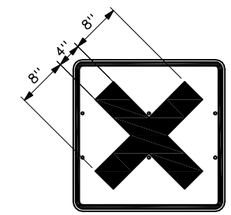

WARNING "X"
SPECIFICATIONS

1. SIGNS SHALL BE MADE OF NO. 18 U.S. GAGE STEEL SHEET. THE STANDARD SIZE SHALL BE 24"x24".
2. FINISH FOR SIGNS SHALL BE PORCELAIN ENAMEL. BACKGROUND COLOR SHALL BE ENGINEER GRADE YELLOW IN ACCORDANCE WITH ASTM D 4956. "X" SHALL BE BLACK.
3. EACH SIGN SHALL HAVE HOLES FITTED WITH BRASS EYELETS. FINISHED HOLES SHALL BE LARGE ENOUGH TO TAKE 3/8" BOLTS.
4. HOLE SPACING SHALL BE PER APPLICABLE REFERENCE DRAWING.
5. DOT HIGHWAY CROSSING SIGN DESIGNATED W2-1 TURNED 1/4 TURN TO BECOME AN "X".

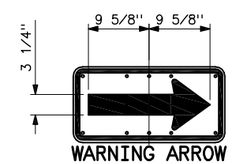

WARNING ARROW
SPECIFICATIONS

1. SIGNS SHALL BE MADE OF NO. 18 U.S. GAGE STEEL SHEET. THE STANDARD SIZE SHALL BE 24"x12".
2. FINISH FOR SIGNS SHALL BE PORCELAIN ENAMEL. BACKGROUND COLOR SHALL ENGINEER GRADE YELLOW IN ACCORDANCE WITH ASTM D 4956. "ARROW" SHALL BE BLACK.
3. EACH SIGN SHALL HAVE HOLES FITTED WITH BRASS EYELETS. FINISHED HOLES SHALL BE LARGE ENOUGH TO TAKE 3/8" BOLTS.
4. HOLE SPACING SHALL BE PER APPLICABLE REFERENCE DRAWING.
5. DOT SIGN DESIGNATED W1-6.

MARKER BALL
SPECIFICATIONS

1. THE STANDARD SIZE SHALL BE A 36" MARKER BALL.
2. AN OPTIONAL 24" BALL MAY BE USED ON POWER LINES BELOW 50 FEET ABOVE GROUND.
3. THE COLOR SHALL BE INTERNATIONAL ORANGE.
4. FAA ADVISORY CIRCULAR AC 70/7460 (CH2) 34a.(1)

TRANSMISSION LINE HAZARD MARKING SYSTEM(CONT)

2. **TRANSMISSION LINE WARNING SIGNS AND MARKER BALLS:**
HAZARDS ALONG WESTERN'S TRANSMISSION LINE PATROL ROUTES SHALL BE MARKED WITH WARNING SIGNS AND MARKER BALLS AS SHOWN ON THIS DRAWING.

3. **TRANSMISSION LINE MARKING PROCEDURES:**
HAZARDS ALONG WESTERN'S TRANSMISSION LINE PATROL ROUTES SHALL BE MARKED AS SHOWN ON THIS DRAWING AND IN THE FOLLOWING MANNER:

OVER CROSSINGS:
OVER CROSSINGS SHALL BE IDENTIFIED WITH A COMBINATION OF ONE WARNING ARROW SIGN AND ONE MARKER BALL IN EACH APPROACH DIRECTION.(MARKING DIAGRAM A)

WARNING ARROW SIGNS, TO IDENTIFY UPCOMING HAZARDS, SHALL BE LOCATED NOT LESS THAN 500 FEET FROM THE OVER-CROSSING. THE ARROW SIGNS SHALL BE ATTACHED DIRECTLY TO THE TOP OF THE STRUCTURES.

MARKER BALLS, USED TO MARK THE OVER-CROSSING OVERHEAD GROUND WIRE(OGW), SHALL BE LOCATED ON THE OVER-CROSSING OGW AT A DISTANCE OF 25 FEET FROM THE OUTSIDE CONDUCTOR PHASE (LOWER CIRCUIT CONDUCTOR). IF THE OVER-CROSSING LINE HAS TWO OGW'S, ONE MARKER BALL SHALL BE ON THE FIRST OGW FOR EACH OVER-CROSSING APPROACH.

ALL WESTERN-OWNED TRANSMISSION CIRCUIT OVERHEAD GROUND WIRES WILL BE MARKED WITH MARKER BALLS AS DESCRIBED ABOVE. OVER-CROSSINGS NOT OWNED BY WESTERN WILL ALSO BE MARKED AS DESCRIBED ABOVE WITH PERMISSION FROM THE OWNER.

IF PERMISSION IS NOT GRANTED BY THE OWNER, TO INSTALL MARKER BALLS ON THE OGW, THEN THE OVER-CROSSING WILL BE MARKED WITH FOUR WARNING ARROWS, TWO IN EACH APPROACH DIRECTION TO IDENTIFY UPCOMING HAZARDS. THE FIRST VERTICAL ARROW, SHALL BE LOCATED NOT LESS THAN 500 FEET FROM THE OVER-CROSSING. THE SECOND VERTICAL ARROW SHALL BE LOCATED AT THE NEXT STRUCTURE AWAY FROM THE FIRST ARROW. THE WARNING ARROWS SHALL BE ATTACHED DIRECTLY TO THE TOP OF THE STRUCTURES. (MARKING DIAGRAM B)

HORIZONTAL ANGLES:
FOR HORIZONTAL LINE ANGLES (RIGHT TURNS) OF 45 DEGREES AND GREATER, ONE WARNING ARROW AND TWO MARKER BALLS SHALL BE REQUIRED TO MARK THE TRANSMISSION LINE ANGLE. (MARKING DIAGRAM C)

A HORIZONTAL ARROW POINTING IN THE DIRECTION OF A RIGHT TURN, SHALL BE LOCATED NOT LESS THAN 500 FEET PRIOR THE ANGLE STRUCTURE. THE ARROW SHOULD BE ATTACHED DIRECTLY TO THE TOP OF THE STRUCTURE.

A MARKER BALL SHALL BE INSTALLED ON THE INSIDE OGW 25 FEET PRIOR TO AND AFTER THE INSIDE ANGLE STRUCTURE.

UNDER CROSSINGS:
UNDER-CROSSINGS, NOT OWNED BY WESTERN NEED NOT BE MARKED.

OTHER HAZARDS:
ALL OTHER AERIAL TRANSMISSION LINE PATROL HAZARDS SHALL BE MARKED USING A WARNING "X" AND A MARKER BALL IN THE TWO APPROACH DIRECTIONS. WARNING "X'S" SHALL BE LOCATED NOT LESS THAN 500 FEET FROM THE HAZARD. AN EXAMPLE MAY BE A TOWER. (MARKING DIAGRAM D)

OTHER HAZARDS NOT OWNED BY WESTERN SHALL ALSO BE MARKED AS DESCRIBED ABOVE WITH PERMISSION OF THE OWNER.

IF PERMISSION IS NOT GRANTED BY THE OWNER TO INSTALL MARKER BALLS ON THE HAZARD, THEN THE HAZARD (ALL HAZARDS OTHER THAN OVER-CROSSING) WILL BE MARKED USING TWO MARKER SIGNS (X'S) IN EACH APPROACH DIRECTION. THE FIRST WARNING "X'S" SHALL BE LOCATED NOT LESS THAN 500 FEET FROM THE HAZARD. THE SECOND WARNING "X'S" SHALL BE LOCATED AT THE NEXT STRUCTURE AWAY FROM THE FIRST WARNING "X'S". AN EXAMPLE MAY BE A TOWER. (MARKING DIAGRAM E)

REFERENCE DRAWINGS

AERIAL WARNING SIGNS
FOR LATTICE STEEL TOWERS _____ 41 9005
FOR WOOD POLE STRUCTURES _____ 41 9026
FOR STEEL POLE STRUCTURES _____ 41 9028

A	7-15-03 A7-RC	REVISED TITLE BLOCK ONLY.

UNITED STATES DEPARTMENT OF ENERGY
WESTERN AREA POWER ADMINISTRATION
CORPORATE SERVICES OFFICE - LAKEWOOD, COLORADO

TRANSMISSION LINE STANDARDS
AERIAL PATROL WARNING SIGNS AND MARKER BALL MARKING DIAGRAMS

DESIGNED C.A. CABRAL APPROVED ROSS M. CLARK
ELECTRICAL ENGINEERING MANAGER

CAE	DECEMBER 4, 2000	41	9029

Plotted By:Seela on 9/20/2006 2:10 PM
IWAS:
S:\Projects\StandardDrawings\Design\Drawings\xDwgsReadyForFinal\Scripts\41_9029b.dwg Last Saved By: Holly Seela on 9/21/2006 7:09 AM

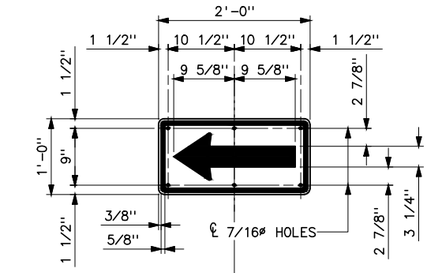

NOTE: SIGN MAY BE MOUNTED EITHER HORIZONTALLY OR VERTICALLY, SEE NOTE 10.

WARNING ARROW

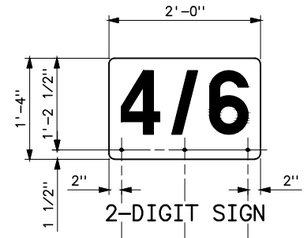

2-DIGIT SIGN

3- AND 4-DIGIT SIGN

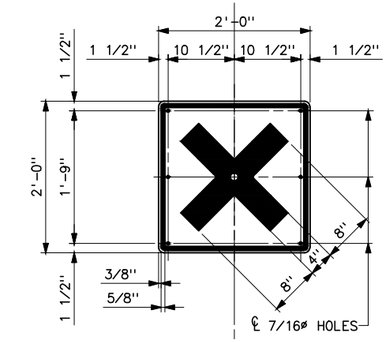

NOTE: FIELD DRILL 7/16ø HOLE IN CENTER OF WARNING "X"SIGN.

WARNING "X"

5-DIGIT SIGN

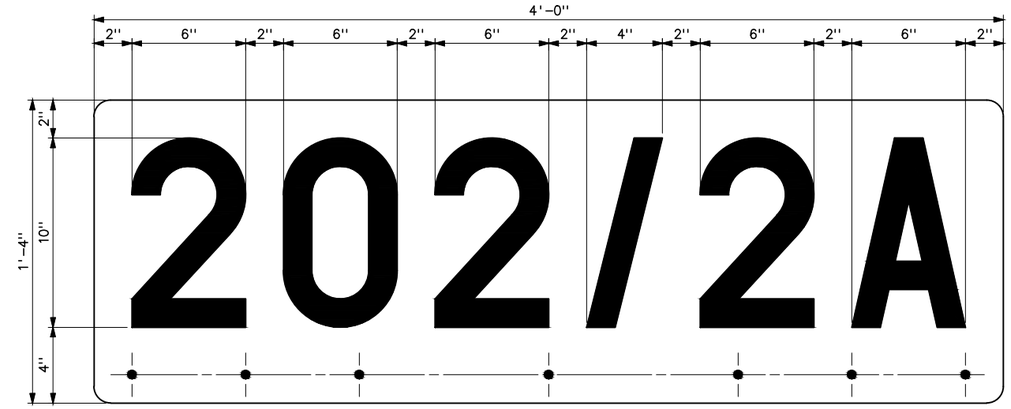

STRUCTURE NUMBER SIGN FIGURE DIMENSIONS
(NOTES 5 AND 6)

℄ LEFT HORIZONTAL WARNING ARROW SIGN OR WARNING "X" SIGN

℄ 7/16ø HOLES

℄ VERTICAL WARNING ARROW SIGN

℄ RIGHT HORIZONTAL WARNING ARROW SIGN OR WARNING "X" SIGN

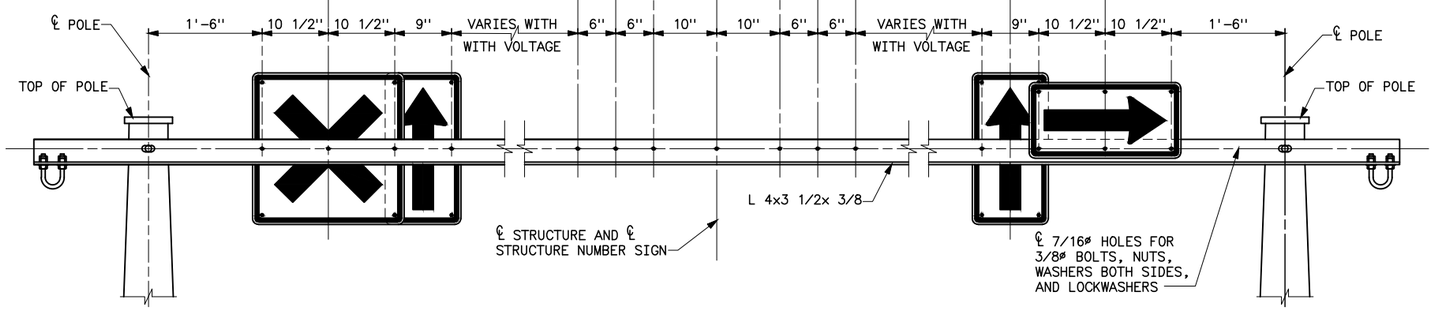

NOTES

1. SIGNS SHALL BE NO. 18 U.S. GAGE STEEL.
2. FINISH FOR SIGNS SHALL BE PORCELAIN ENAMEL. BACKGROUND COLOR SHALL BE YELLOW AND FIGURES SHALL BE BLACK.
3. PORCELAIN ENAMEL SHALL BE IN ACCORDANCE WITH THE RECOMMENDED STANDARDS FOR MANUFACTURE OF PORCELAIN ENAMEL SIGNS (PEI: S-103) OF THE SIGN DIVISION OF THE PORCELAIN ENAMEL INSTITUTE, INC.
4. FIGURES SHALL BE "BLOCK" TYPE.
5. STRUCTURE NUMBER SIGNS SHALL HAVE IDENTICAL HORIZONTALLY-CENTERED FIGURES ON FRONT AND BACK SIDES.
6. DIMENSIONS FOR THE NUMBER "1" SHALL BE 1 1/2" WIDE BY 10" HIGH. DIMENSIONS FOR ALL OTHER FIGURES SHALL BE 6" WIDE BY 10" HIGH. DIMENSION FOR THE "/" SYMBOL SHALL BE 4" WIDE AND 10" HIGH. ALL FIGURES AND SYMBOLS SHALL BE SEPARATED BY 2" SPACES.
7. WARNING "X" SIGN SHALL BE STANDARD UNITED STATES DEPARTMENT OF TRANSPORTATION (DOT) FEDERAL HIGHWAY SIGN, DESIGNATION W2-1, ROTATED 45° TO BECOME AN "X".
8. WARNING ARROW SIGN SHALL BE STANDARD DOT SIGN DESIGNATION W1-6.
9. ALL SIGN MOUNTING HOLES SHALL BE 7/16ø. SIGNS SHALL BE MOUNTED TO PREDRILLED 4" LEG OF L 4x3 1/2x3/8 WITH GALVANIZED 3/8ø BOLTS, NUTS, WASHERS BOTH SIDES, AND LOCKNUTS.
10. FOR SIGN LOCATIONS AND REQUIRED TYPE OF WARNING SIGNS, SEE SPECIFICATIONS AND PLAN AND PROFILE DRAWINGS.

UNITED STATES DEPARTMENT OF ENERGY
WESTERN AREA POWER ADMINISTRATION
CORPORATE SERVICES OFFICE - LAKEWOOD, COLORADO

TRANSMISSION LINE STANDARDS
LIGHT DUTY STEEL POLE H-FRAMES
STRUCTURE SIGNS
DETAILS AND LOCATIONS

DESIGNED BOBBY HAGLER APPROVED DOUG HANSON
CIVIL ENGINEERING MANAGER

CAE	JULY 22, 2002	41	9030

Aug 28, 2014- 8:59am Plotted By: Sweta S:\projects\Transmissionlines\Parker_Gila\Drawings\Final\41_9030.dwg Last Saved By: denton IMAGES:

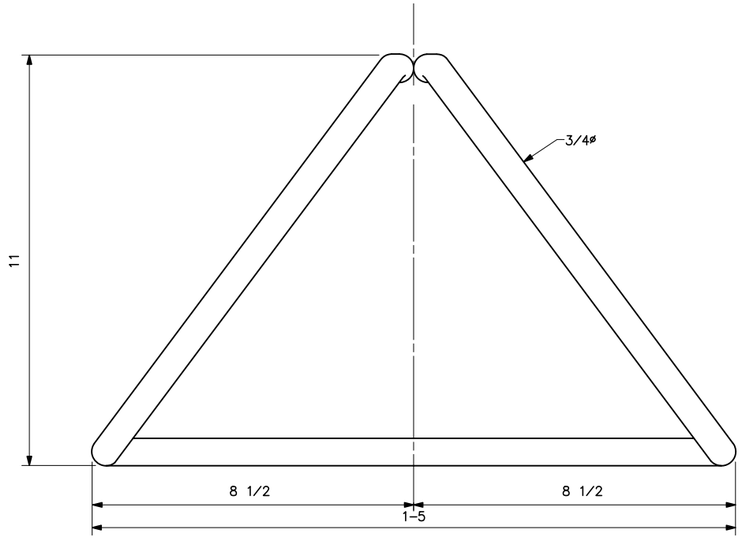

PLAN

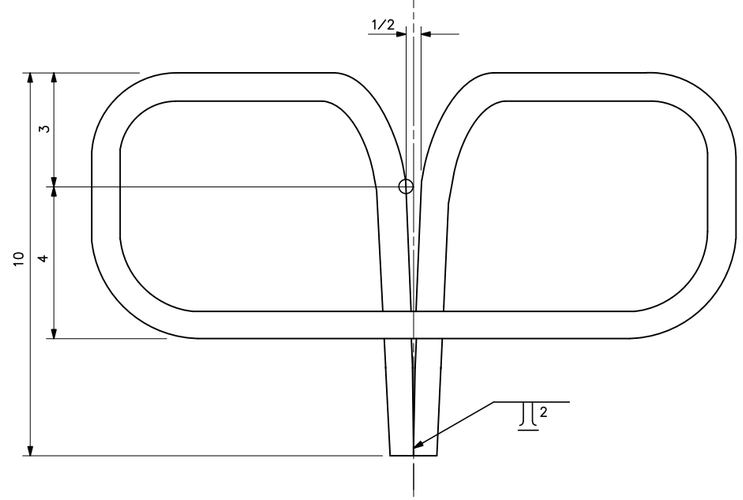

ELEVATION

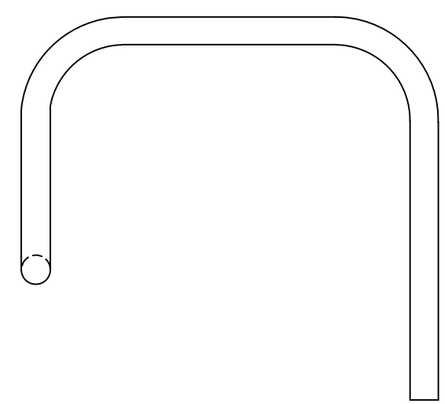

SIDE VIEW

NOTES

1. GALVANIZE MATERIAL AFTER FABRICATION.
2. MINIMUM INSIDE COLD BENDING RADIUS : 2 1/4 INCHES.

REFERENCE DRAWINGS

MAINTENANCE PROVISIONS
OUTLINES_____43 2204 THRU 2209
DETAILS_____43 2202 & 2210

B	7-15-03 A7-DH	REVISED TITLE BLOCK ONLY.
A	7-10-92 A2-WCC	REVISED REFERENCE DRAWINGS

UNITED STATES DEPARTMENT OF ENERGY
WESTERN AREA POWER ADMINISTRATION
CORPORATE SERVICES OFFICE - LAKEWOOD, COLORADO

TRANSMISSION LINE STRUCTURE STANDARDS
STEEL POLE STRUCTURES
MAINTENANCE PROVISIONS-WORK RING

DESIGNED B.G. HAGLER APPROVED W.C. COWAN
DIRECTOR, DIVISION OF TRANSMISSION LINE AND BUILDING DESIGN

A	MARCH 31, 1989	43	2203

Plotted By: lampman Sep 16, 2009- 3:39pm
TIMES: S:\Specifications\2009 Construction Standards\Standard Drawings\copy_43_2203b.dwg Last Saved By: Eva Lampman on 9/16/2009 3:37 PM

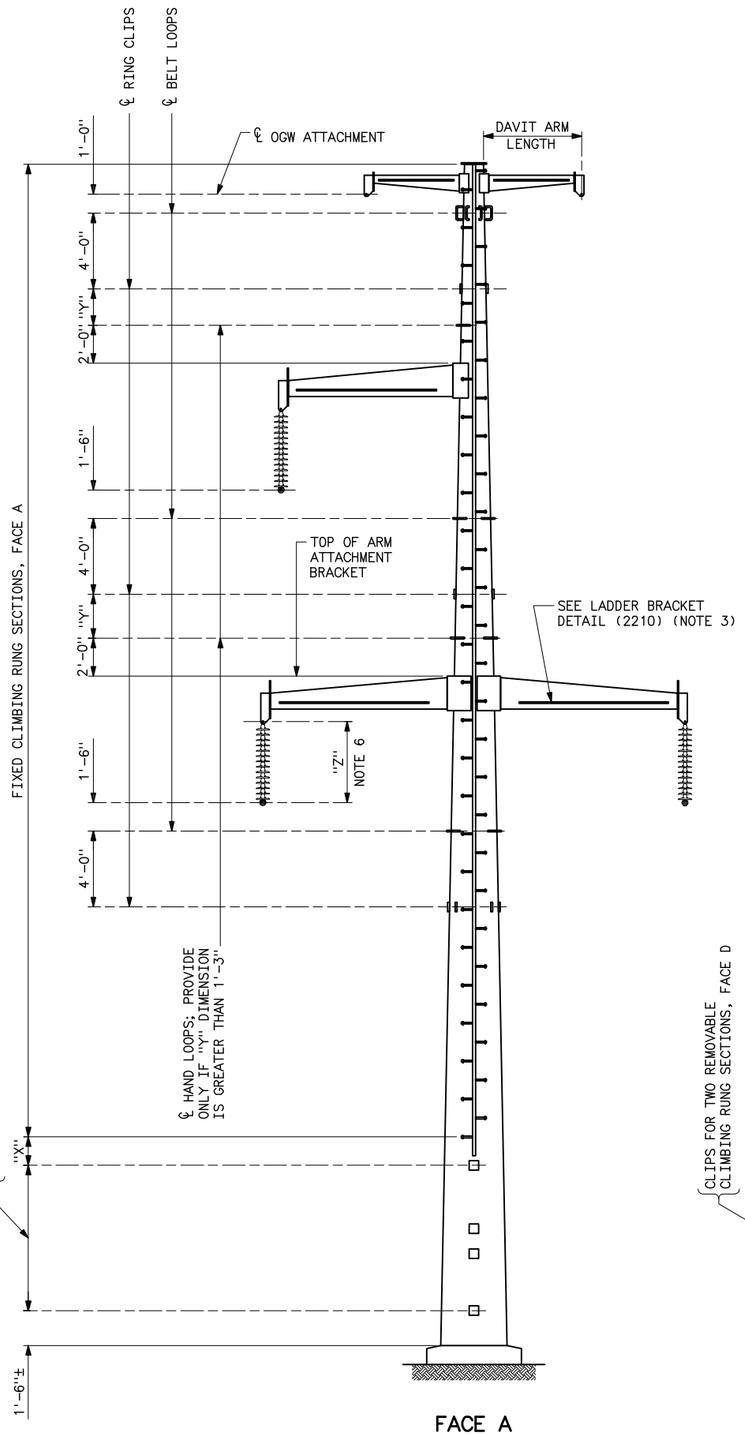

FACE A
TANGENT AND SMALL ANGLE SUSPENSION STRUCTURES

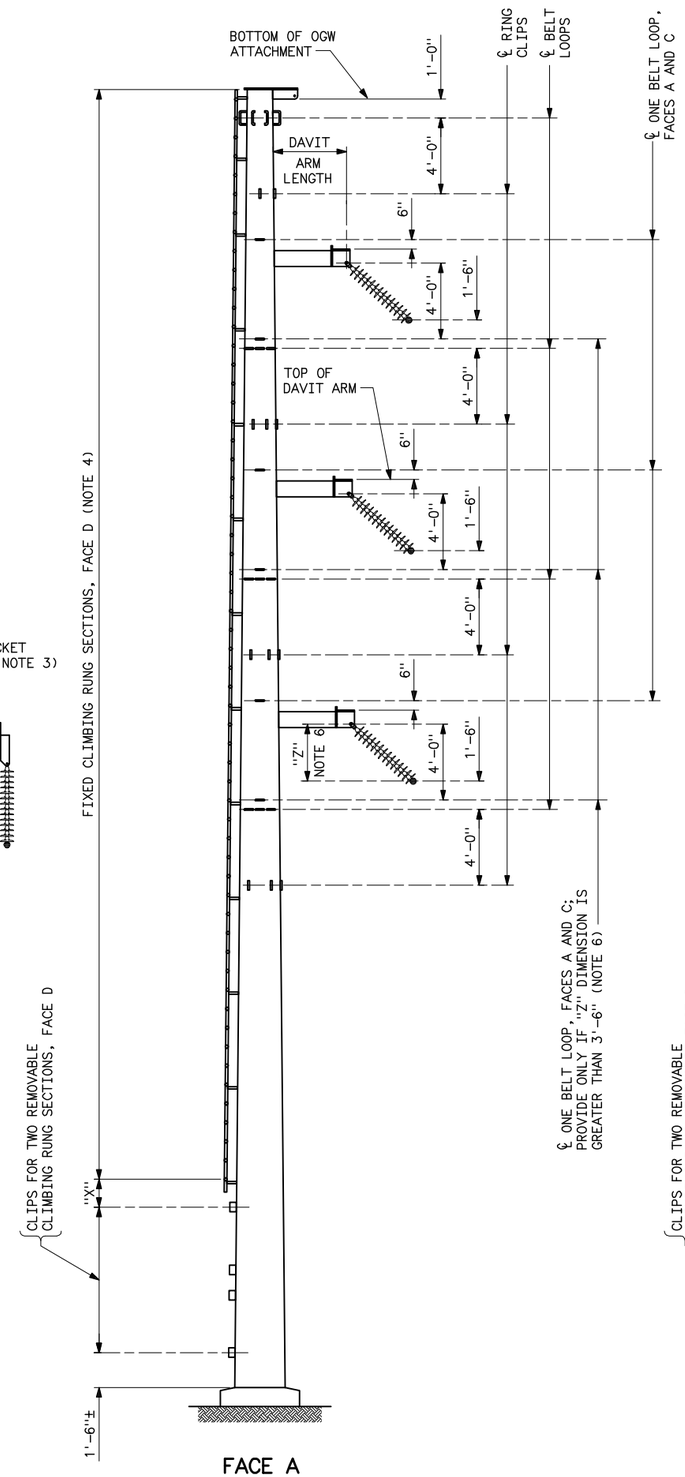

FACE A
MEDIUM AND LARGE ANGLE SUSPENSION STRUCTURES

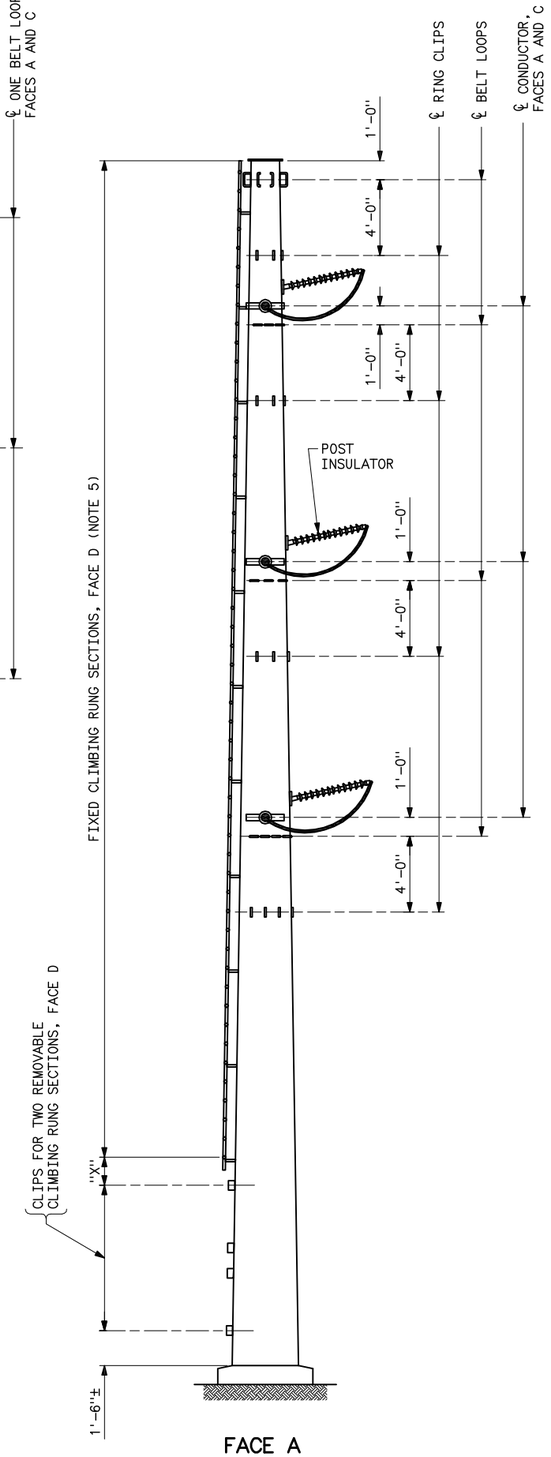

FACE A
TENSION STRUCTURES

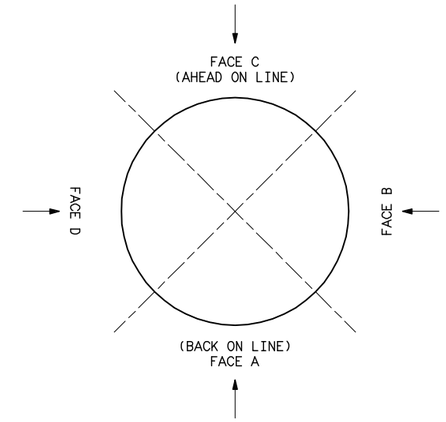

PLAN

(ALL VIEWS TAKEN LOOKING IN DIRECTION OF ARROW)

NOTES

1. "X" DIMENSION SHALL BE MINIMUM REQUIRED TO INSTALL TOP REMOVABLE CLIMBING RUNG SECTION.
2. DISTANCE FROM STEPS TO FACE OF POLE SHAFTS SHALL BE THE SAME FOR FIXED AND REMOVABLE CLIMBING RUNG SECTIONS.
3. PROVIDE LADDER BRACKETS ON DAVIT ARMS LONGER THAN 3'-0", AS SHOWN ON DRAWING 43 2210.
4. FOR MEDIUM AND LARGE ANGLE SUSPENSION STRUCTURES, LOCATE FIXED CLIMBING RUNG SECTIONS AND CLIPS FOR REMOVABLE CLIMBING RUNG SECTIONS ON POLE FACE OPPOSITE SUSPENSION INSULATORS.
5. FOR TENSION STRUCTURES, LOCATE FIXED CLIMBING RUNG SECTIONS AND CLIPS FOR REMOVABLE CLIMBING RUNG SECTIONS ON POLE FACE OPPOSITE POST INSULATORS.
6. FOR VERTICAL COMPONENT OF INSULATOR LENGTH, "Z", SEE SPECIFICATIONS.
7. WELDS TO ATTACH MAINTENANCE PROVISIONS TO STRUCTURES SHALL DEVELOP THE ULTIMATE TENSILE STRENGTH OF THE ATTACHED PART.
8. FOR STRUCTURES WITH CONDUCTOR AND GROUND WIRE ATTACHMENT COMBINATIONS NOT SHOWN, PROVIDE ONLY THOSE MAINTENANCE PROVISIONS WHICH APPLY TO THAT TYPE OF ATTACHMENT.

REFERENCE DRAWING

MAINTENANCE PROVISIONS – DETAILS_ _ _ _ _ _ _43 2210

H	09-12-06 A7-BGH	REVISED LADDER BRACKETS.
G	3-1-06 A7-RMC	CORRECTED MISSPELLED WORD IN NOTE 5.
F	7-15-03 A7-DH	REVISED TITLE BLOCK ONLY.
E	10-11-02 A7-BGH	REDRAWN AND MINOR REVISIONS.

UNITED STATES DEPARTMENT OF ENERGY
WESTERN AREA POWER ADMINISTRATION
CORPORATE SERVICES OFFICE – LAKEWOOD, COLORADO

TRANSMISSION LINE STRUCTURE STANDARDS
STEEL POLE STRUCTURES
MAINTENANCE PROVISIONS – OUTLINES

DESIGNED BOBBY HAGLER _ _ _ _ _ APPROVED DOUG HANSON _ _ _ _ _ _ _ _ _ _
CIVIL ENGINEERING MANAGER

SAE	OCTOBER 11, 2002	43	2206

Plotted By:Lampman on ——
IWAGS:
C:\Documents And Settings\lampman\Desktop\copy_43_2206h.dwg Last Saved By: Lampman, Eva on 11/28/2012 9:10 AM

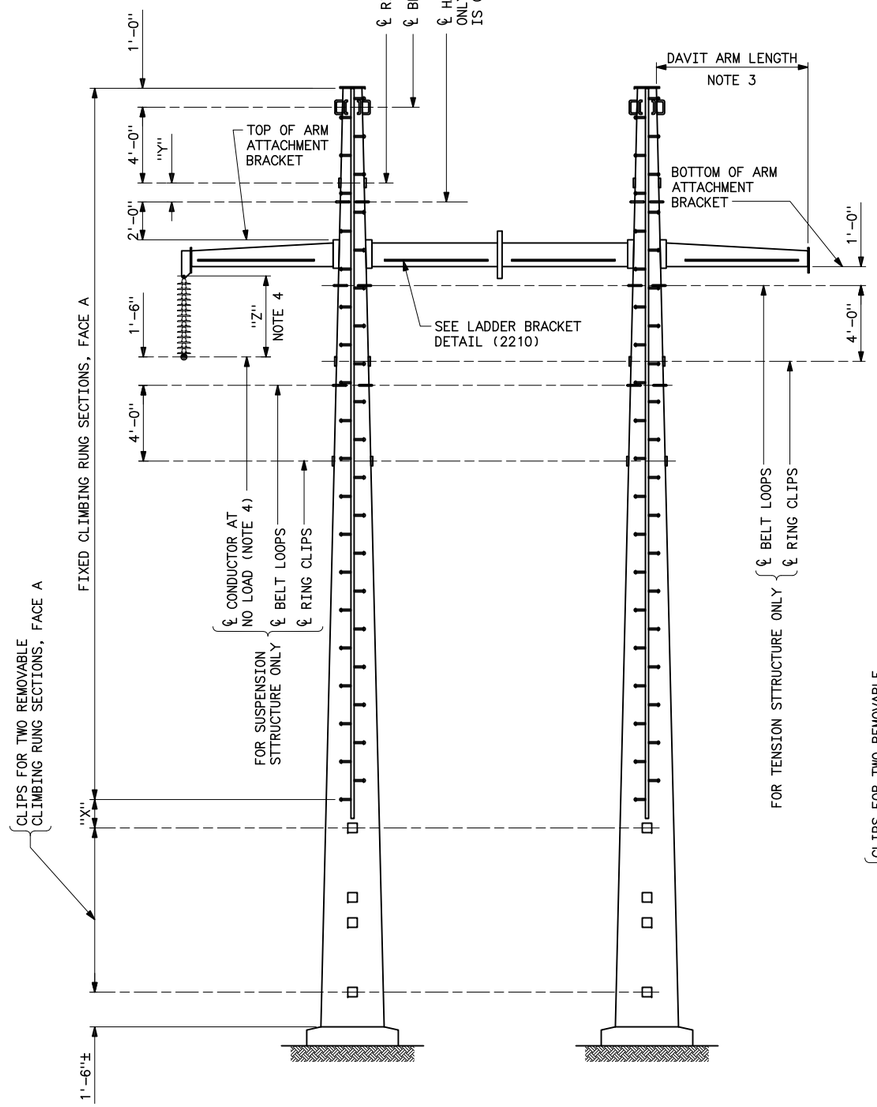

FACE A
H-FRAME STRUCTURES

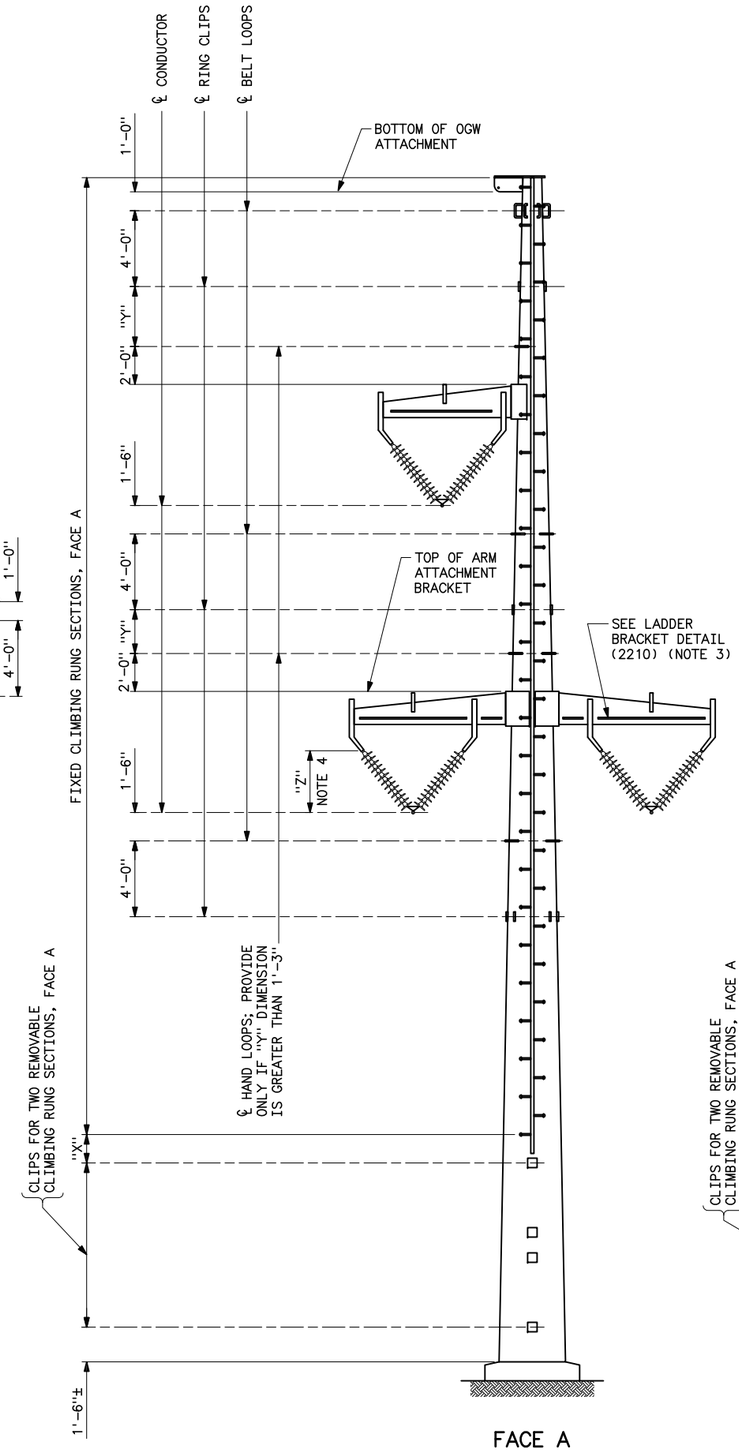

FACE A
STRUCTURES WITH
VEE-STRINGS

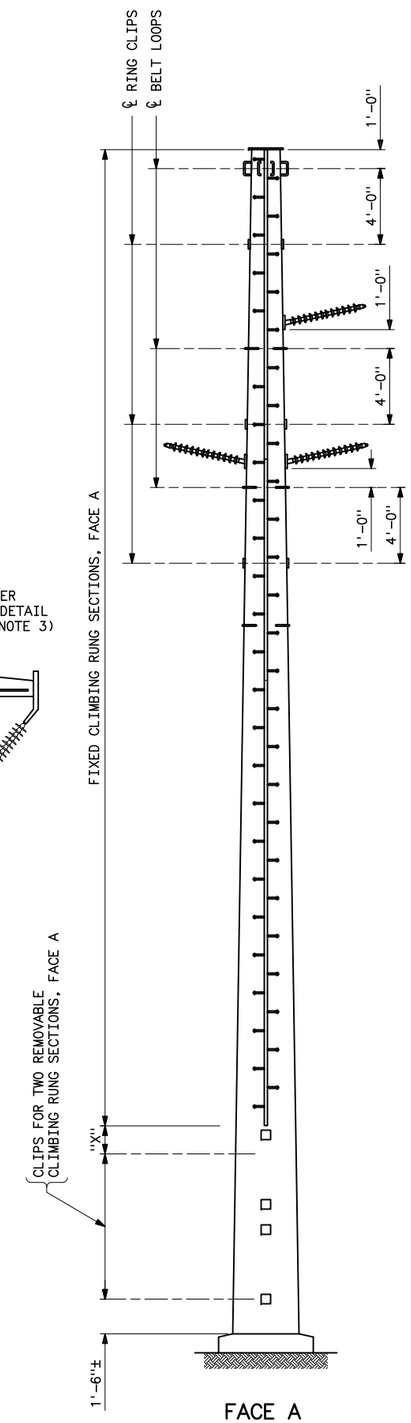

FACE A
STRUCTURES WITH
POST INSULATORS

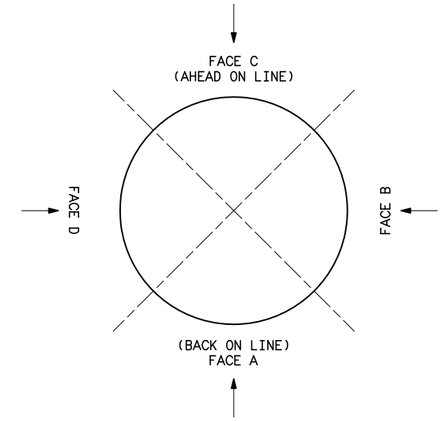

PLAN

(ALL VIEWS TAKEN LOOKING IN DIRECTION OF ARROW)

NOTES

1. "X" DIMENSION SHALL BE MINIMUM REQUIRED TO INSTALL TOP REMOVABLE CLIMBING RUNG SECTION.
2. DISTANCE FROM STEPS TO FACE OF POLE SHAFTS SHALL BE THE SAME FOR FIXED AND REMOVABLE CLIMBING RUNG SECTIONS.
3. PROVIDE LADDER BRACKETS ON DAVIT ARMS LONGER THAN 3'-0", AS SHOWN ON DRAWING 43 2210.
4. FOR VERTICAL COMPONENT OF INSULATOR LENGTH, "Z", SEE SPECIFICATIONS.
5. WELDS TO ATTACH MAINTENANCE PROVISIONS TO STRUCTURES SHALL DEVELOP THE ULTIMATE TENSILE STRENGTH OF THE ATTACHED PART.
6. FOR STRUCTURES WITH CONDUCTOR AND GROUND WIRE ATTACHMENT COMBINATIONS NOT SHOWN, PROVIDE ONLY THOSE MAINTENANCE PROVISIONS WHICH APPLY TO THAT TYPE OF ATTACHMENT.

REFERENCE DRAWING

MAINTENANCE PROVISIONS - DETAILS_____43 2210

G	09-12-06 A7-BGH	REVISED LADDER BRACKETS.
F	7-15-03 A7-DH	REVISED TITLE BLOCK ONLY.
E	10-16-02 A7-BGH	REDRAWN AND MINOR REVISIONS.

UNITED STATES DEPARTMENT OF ENERGY
WESTERN AREA POWER ADMINISTRATION
CORPORATE SERVICES OFFICE - LAKEWOOD, COLORADO

TRANSMISSION LINE STRUCTURE STANDARDS
STEEL POLE STRUCTURES
MAINTENANCE PROVISIONS - OUTLINES

DESIGNED BOBBY HAGLER _____ APPROVED DOUG HANSON _____
CIVIL ENGINEERING MANAGER

CAE	OCTOBER 16, 2002	43	2207

Plotted By: lampman Sep 16, 2009- 4:02pm
FILNAME: S:\Specifications\2009 Construction Standards\Standard Drawings\copy_43_2207g.dwg Last Saved By: Eva Lampman on 9/16/2009 4:02 PM

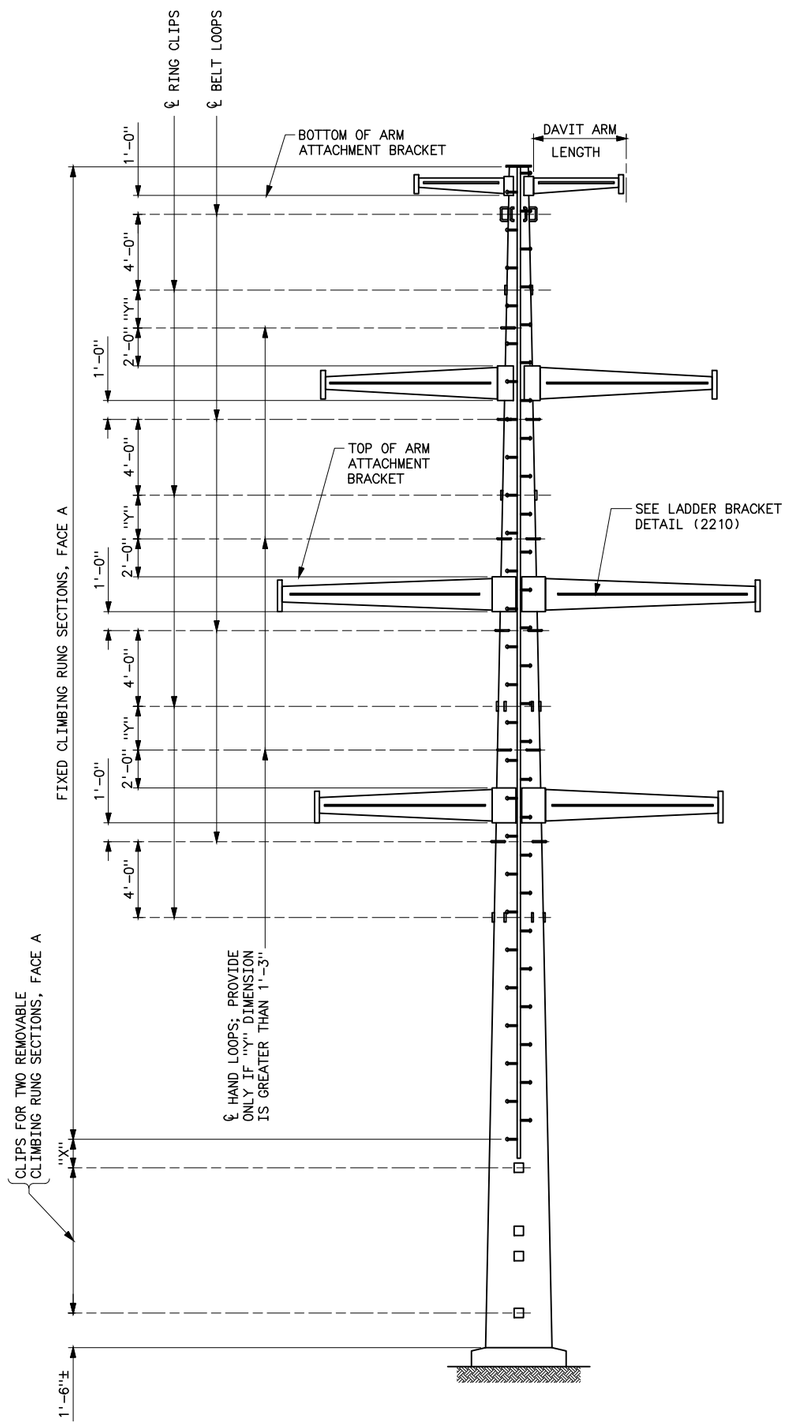

FACE A
TENSION STRUCTURE WITH DAVIT ARMS

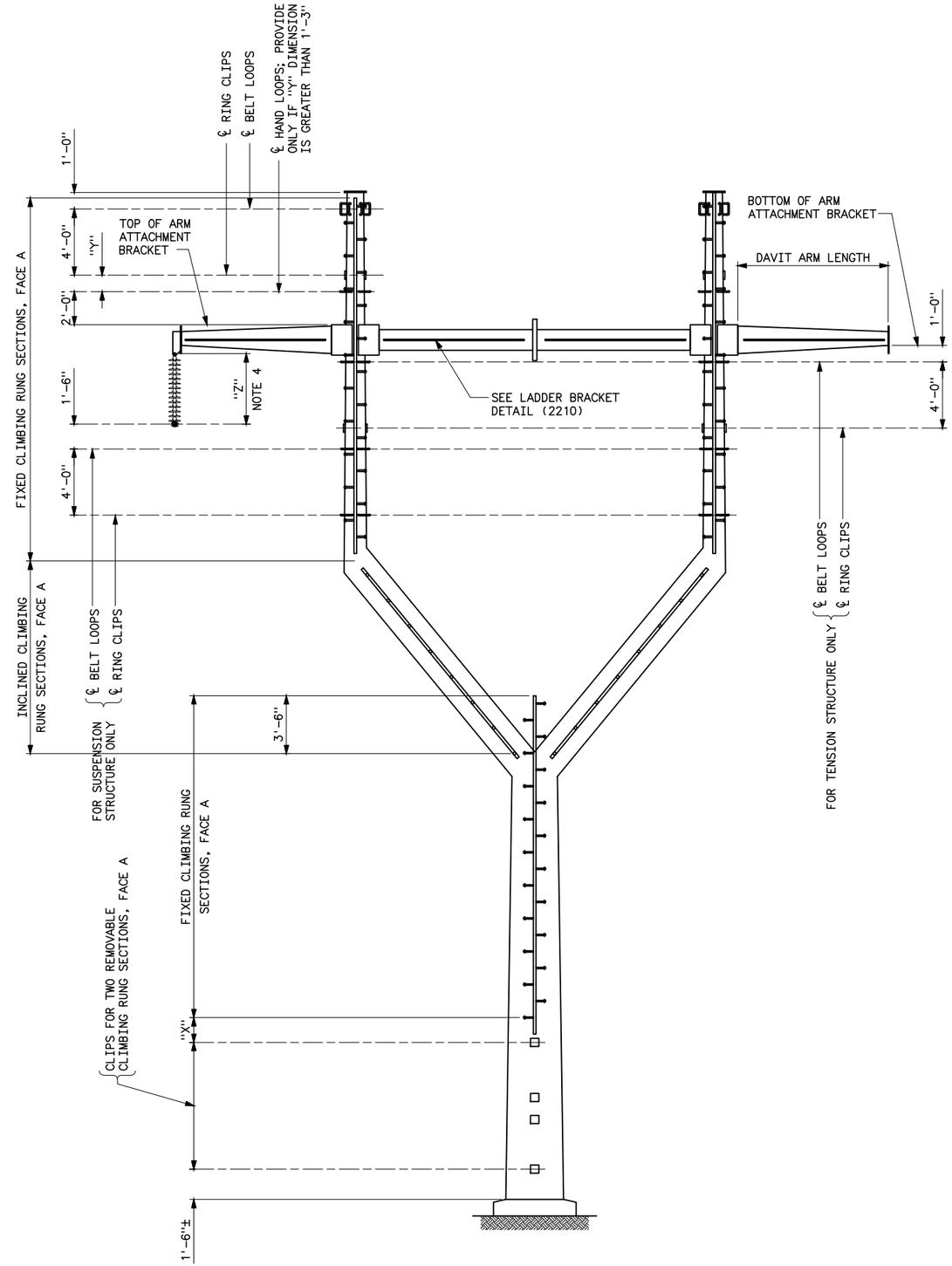

FACE A
Y-TYPE STRUCTURE

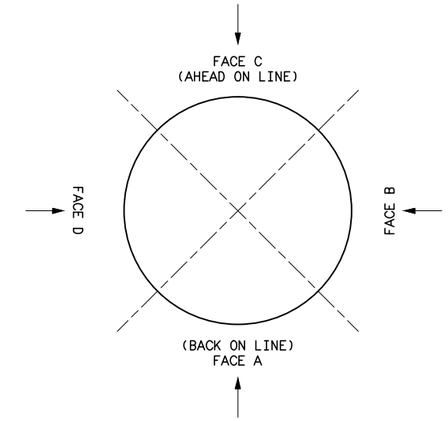

PLAN
(ALL VIEWS TAKEN LOOKING IN DIRECTION OF ARROW)

NOTES

1. "X" DIMENSION SHALL BE MINIMUM REQUIRED TO INSTALL TOP REMOVABLE CLIMBING RUNG SECTION.
2. DISTANCE FROM STEPS TO FACE OF POLE SHAFTS SHALL BE THE SAME FOR FIXED AND REMOVABLE CLIMBING RUNG SECTIONS.
3. PROVIDE LADDER BRACKETS ON DAVIT ARMS LONGER THAN 3'-0", AS SHOWN ON DRAWING 43 2210.
4. FOR VERTICAL COMPONENT OF INSULATOR LENGTH, "Z", SEE SPECIFICATIONS.
5. WELDS TO ATTACH MAINTENANCE PROVISIONS TO STRUCTURES SHALL DEVELOP THE ULTIMATE TENSILE STRENGTH OF THE ATTACHED PART.
6. FOR STRUCTURES WITH CONDUCTOR AND GROUND WIRE ATTACHMENT COMBINATIONS NOT SHOWN, PROVIDE ONLY THOSE MAINTENANCE PROVISIONS WHICH APPLY TO THAT TYPE OF ATTACHMENT.

REFERENCE DRAWING

MAINTENANCE PROVISIONS - DETAILS_____43 2210

H	09-12-06 A7-BGH	REVISED LADDER BRACKETS.
G	7-15-03 A7-DH	REVISED TITLE BLOCK ONLY.
F	10-17-02 A7-BGH	REDRAWN AND MINOR REVISIONS.

UNITED STATES DEPARTMENT OF ENERGY
WESTERN AREA POWER ADMINISTRATION
CORPORATE SERVICES OFFICE - LAKEWOOD, COLORADO

TRANSMISSION LINE
STRUCTURE STANDARDS
STEEL POLE STRUCTURES
MAINTENANCE PROVISIONS - OUTLINES

DESIGNED BOBBY HAGLER _____ APPROVED DOUG HANSON _____
CIVIL ENGINEERING MANAGER

CAE	OCTOBER 17, 2002	43	2208

Plotted By: Lampman on 9/12/2006 1:53 PM
TLWCS
C:\Users\lampman\Desktop\copy_43_2208h.dwg Last Saved By: Lampman, Eva (CONTR) on 5/15/2015 9:46 AM

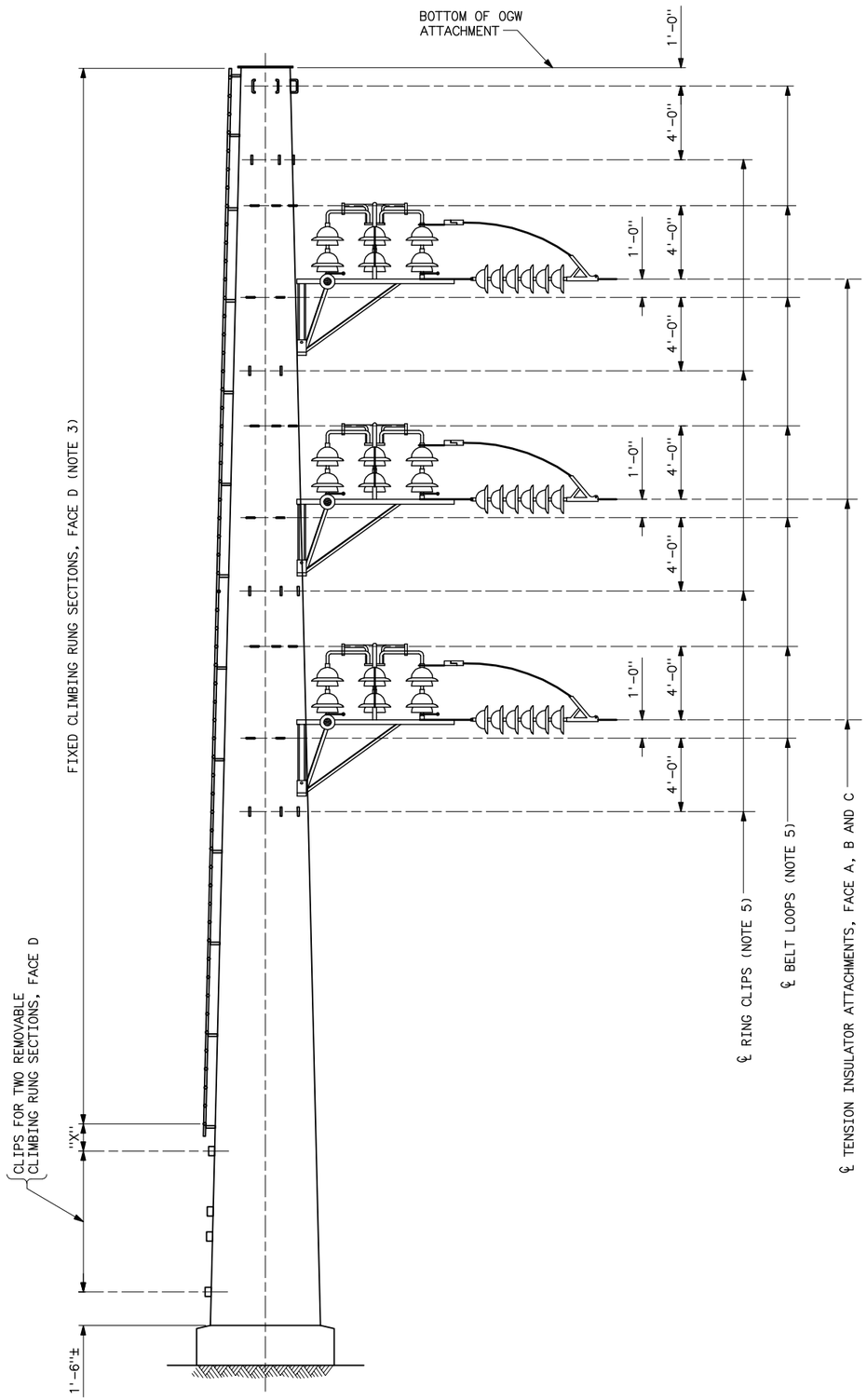

FACE A
SWITCH STRUCTURE

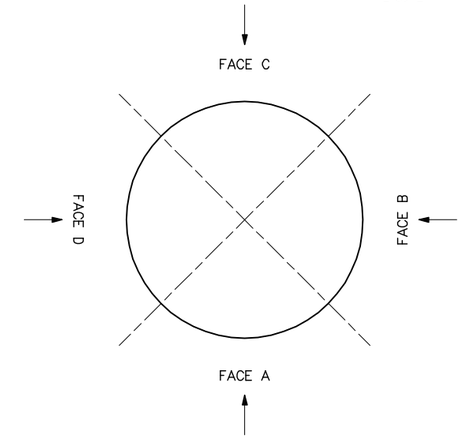

PLAN
(ALL VIEWS TAKEN LOOKING IN DIRECTION OF ARROW)

NOTES

1. "X" DIMENSION SHALL BE MINIMUM REQUIRED TO INSTALL TOP REMOVABLE CLIMBING RUNG SECTION.
2. DISTANCE FROM STEPS TO FACE OF POLE SHAFTS SHALL BE THE SAME FOR FIXED AND REMOVABLE CLIMBING RUNG SECTIONS.
3. FOR SWITCH STRUCTURES, LOCATE FIXED CLIMBING RUNG SECTIONS AND CLIPS FOR REMOVABLE CLIMBING RUNG SECTIONS ON POLE FACE OPPOSITE SWITCHES.
4. WELDS TO ATTACH MAINTENANCE PROVISIONS TO STRUCTURES SHALL DEVELOP THE ULTIMATE TENSILE STRENGTH OF THE ATTACHED PART.
5. DO NOT PROVIDE RING CLIPS OR BELT LOOPS ON FACE B DIRECTLY UNDER SWITCH FRAMES.

REFERENCE DRAWING

MAINTENANCE PROVISIONS - DETAILS_ _ _ _ _ _ _43 2210

G	4-14-09 A7-DH	ADDED NOTE 5.
F	7-15-03 A7-DH	REVISED TITLE BLOCK ONLY.
E	01-23-03 A7-BGH	REDRAWN.

UNITED STATES DEPARTMENT OF ENERGY
WESTERN AREA POWER ADMINISTRATION
CORPORATE SERVICES OFFICE - LAKEWOOD, COLORADO

TRANSMISSION LINE
STRUCTURE STANDARDS
STEEL POLE STRUCTURES
MAINTENANCE PROVISIONS - OUTLINES

DESIGNED BOBBY HAGLER _ _ _ _ _ APPROVED DOUG HANSON _ _ _ _ _ _ _ _ _ _
CIVIL ENGINEERING MANAGER

C/A/E	JANUARY 23, 2003	43	2209

Plotted By: lampman Sep 16, 2009- 3:35pm
IMAGES:
S:\Projects\Substations\TemplateSubstation\SubName.01\Drawings\DesignDrawings\xDwgsReadyForFinal\Scripts\43_2209g.dwg Last Saved By: Holly Seela on 4/14/2009 1:16 PM

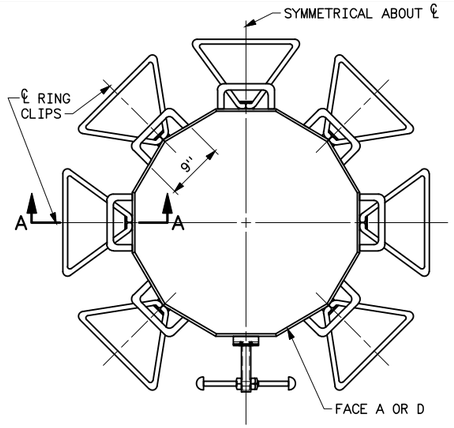

POLE DIAMETER > 36"

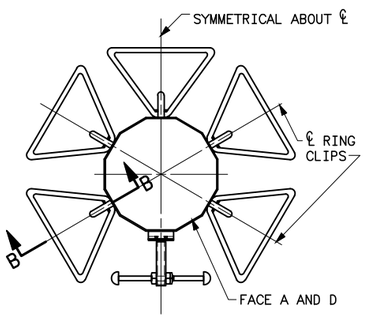

POLE DIAMETER ≤ 36"

TYPICAL BELT LOOP AND WORK RING PLANS

(NOTE 4)

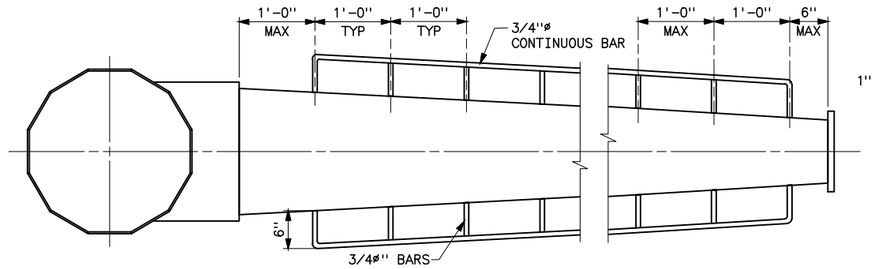

LADDER BRACKET PLAN

FOR DAVIT ARMS LONGER THAN 3'-0"

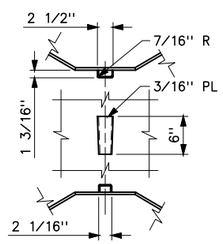

RING CLIP

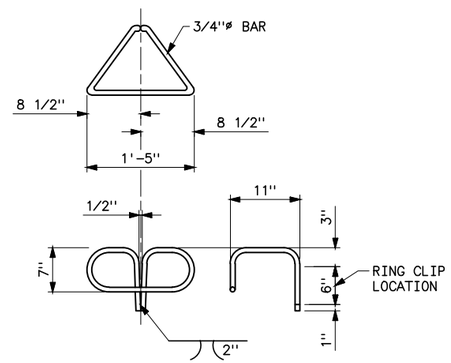

WORK RING

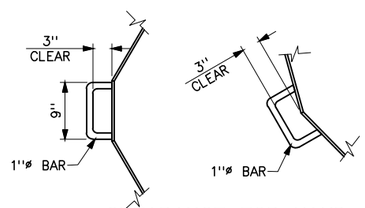

CLEARANCE FOR HAND AND BELT LOOPS

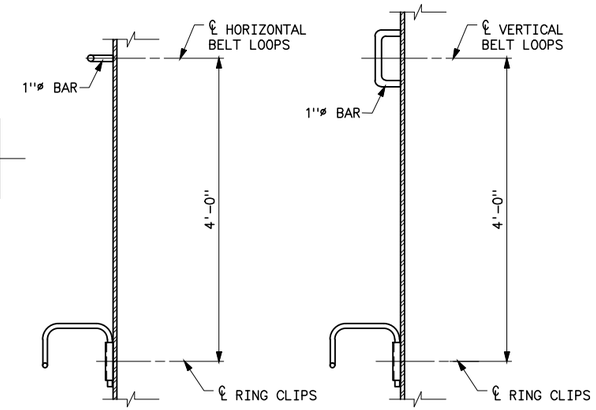

SECTION A–A SECTION B–B

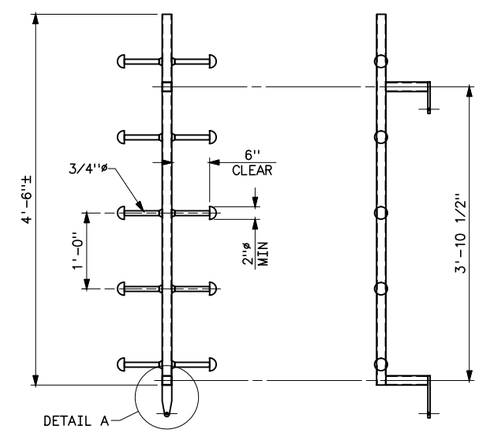

REMOVABLE CLIMBING RUNG SECTION

NOTES

1. MINIMUM INSIDE COLD BENDING RADII (INCHES): 3/4"ø BAR=2 1/4" 1"ø BAR=3"
2. WELDS TO ATTACH MAINTENANCE PROVISIONS TO STRUCTURES SHALL DEVELOP THE ULTIMATE TENSILE STRENGTH OF THE ATTACHED PART.
3. DISTANCE FROM CENTERLINE OF STEP BOLTS TO FACE OF POLE SHAFTS FOR FIXED AND REMOVABLE CLIMBING RUNG SECTIONS SHALL BE 7 INCHES.
4. PROVIDE ONE BELT LOOP ABOVE EACH RING CLIP.
5. FIXED CLIMBING RUNG SECTIONS SHALL BE SPLICED TOGETHER TO FORM A CONTINUOUS CENTER SUPPORT FOR THE FULL HEIGHT OF THE STRUCTURE. SPLICES SHALL BE DESIGNED TO ENSURE FULL STRUCTURAL CONTINUITY OF THE CENTER SUPPORT. SMALL GAPS IN THE CENTER SUPPORT ACROSS SLIP JOINTS ARE ACCEPTABLE.
6. TOP OR BOTTOM CANTILEVERED EXTENSIONS OF FIXED CLIMBING RUNG SECTIONS SHALL NOT EXTEND MORE THAN 27 INCHES BEYOND THE NEAREST CLIP.
7. FOR WEATHERING-STEEL STRUCTURES, AFTER INSTALLING FIXED AND INCLINED CLIMBING RUNG SECTIONS WITH BOLTS, NUTS, AND LOCKNUTS, SPOT WELD THE RUNG SECTION MOUNTING PLATES TO THE ATTACHMENTS ON THE POLE SHAFTS. WELDING SHALL BE SUFFICIENT TO PROVIDE ELECTRICAL CONTINUITY BETWEEN CLIMBING RUNG SECTIONS AND THE POLE SHAFT. PREFERRED WELDING ROD SERIES IS E8018-C3. OTHER ACCEPTABLE SERIES ARE E8018-C1 AND E8018-C2.
8. ALTERNATIVE METHODS FOR ATTACHING FIXED AND INCLINED CLIMBING RUNG SECTIONS MAY BE SUBMITTED FOR APPROVAL.

REFERENCE DRAWINGS

MAINTENANCE PROVISIONS–
WORK RING_____43 2203
OUTLINES_____43 2206 THRU 2209, & 2214

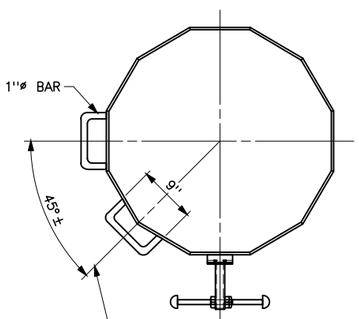

POLE DIAMETER > 36"

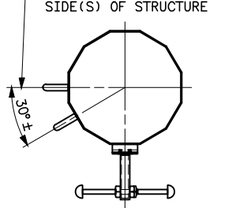

POLE DIAMETER ≤ 36"

HAND LOOP PLANS

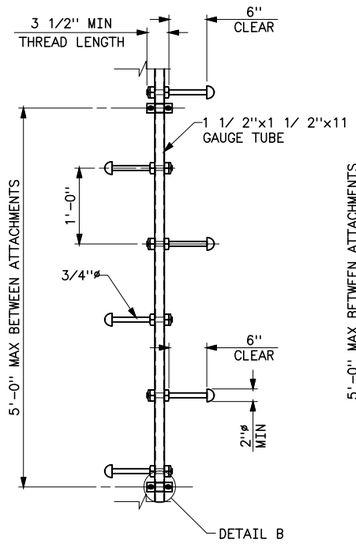

FIXED CLIMBING RUNG SECTION

(NOTES 5 AND 6)

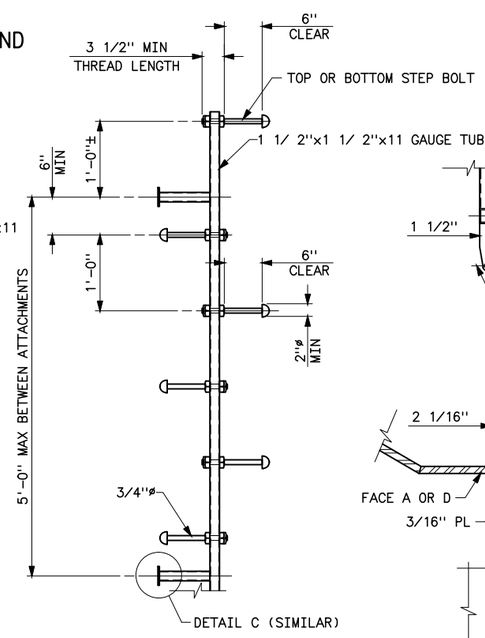

INCLINED CLIMBING RUNG SECTION

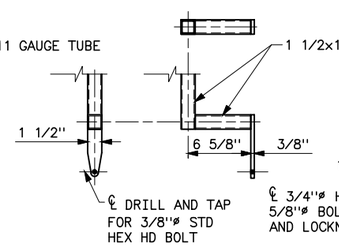

DETAIL A

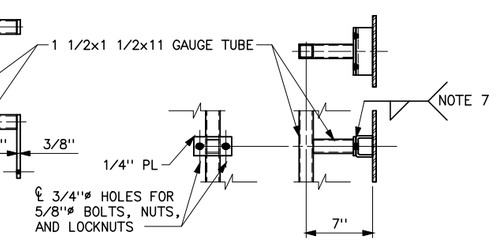

DETAIL B
DETAIL C (SIMILAR)

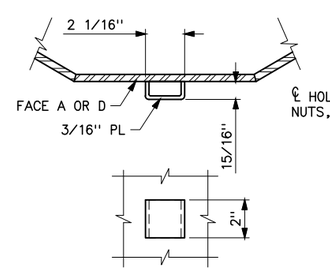

CLIP FOR REMOVABLE CLIMBING RUNG SECTIONS

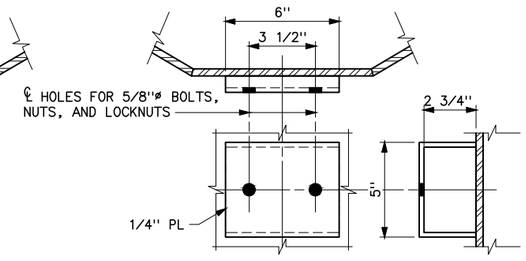

ATTACHMENT FOR FIXED AND INCLINED CLIMBING RUNG SECTIONS

(NOTE 8)

I	9-11-15 A7-BGH	REVISED STEP BOLTS AND ADDED DIMENSIONS FOR ATTACHMENTS FOR FIXED AND INCLINED CLIMBING RUNG SECTIONS. REVISED NOTES 6 AND 7.
H	12-22-05 A7-BH	REVISED LADDER BRACKET PLAN.
G	7-15-03 A7-DH	REVISED TITLE BLOCK ONLY.
F	10-28-02 A7-BGH	REDRAWN. ADDED NOTES 5, 6, AND 8. MINOR REVISIONS.

UNITED STATES DEPARTMENT OF ENERGY
WESTERN AREA POWER ADMINISTRATION
HEADQUARTERS - LAKEWOOD, CO

TRANSMISSION LINE STRUCTURE STANDARDS
STEEL POLE STRUCTURES
MAINTENANCE PROVISIONS - DETAILS

DESIGNED BOBBY HAGLER APPROVED DOUG HANSON CIVIL ENGINEERING MANAGER

CAE	OCTOBER 28, 2002	43	2210

Plotted By: Seela Nov 17, 2015- 12:11pm IMAGES:
S:\projects\Misc\StandardDrawings\DesignDrawings\xDwgsReadyForFinal\Scripts\43_2210I.dwg Last Saved By: Seela, Holly (CONTR) on 11/17/2015 12:11 PM
XREF(S):

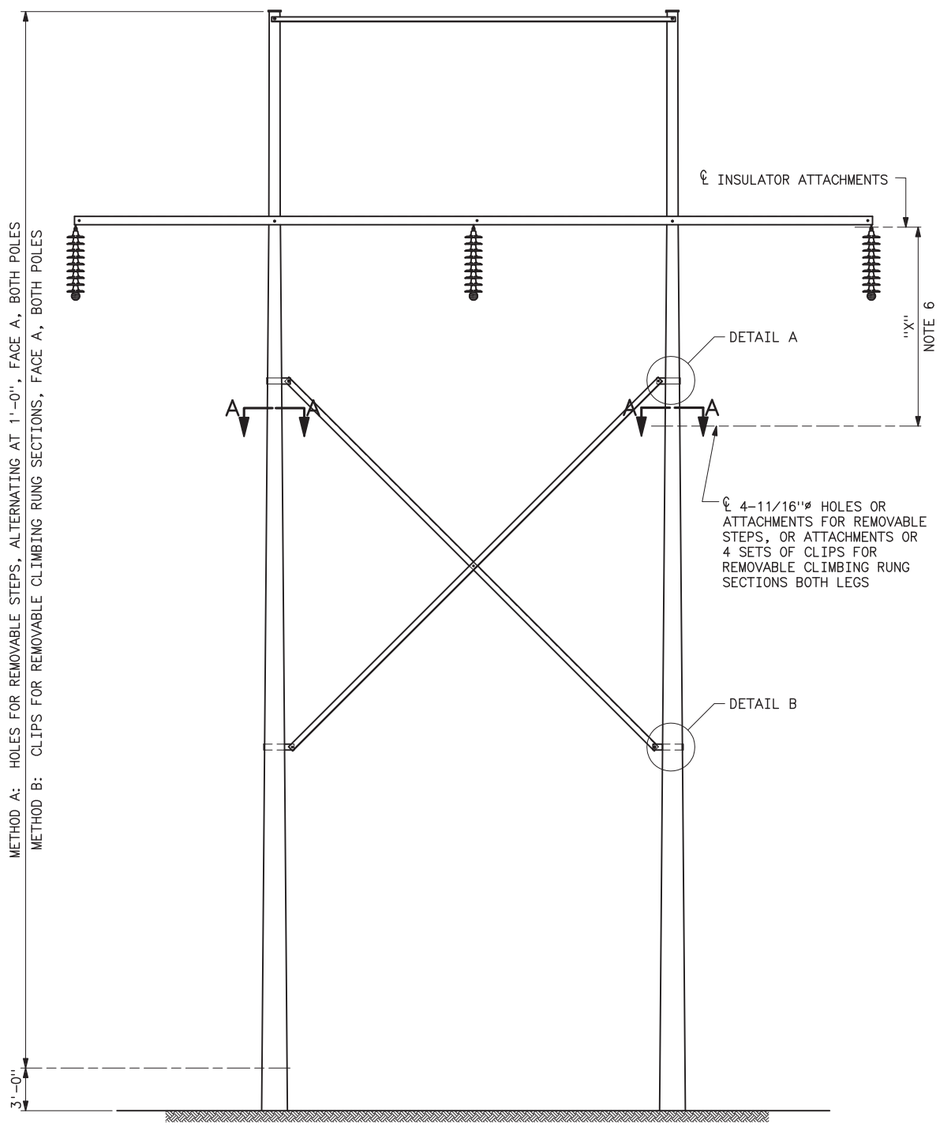

H-FRAME STRUCTURE
FACE A

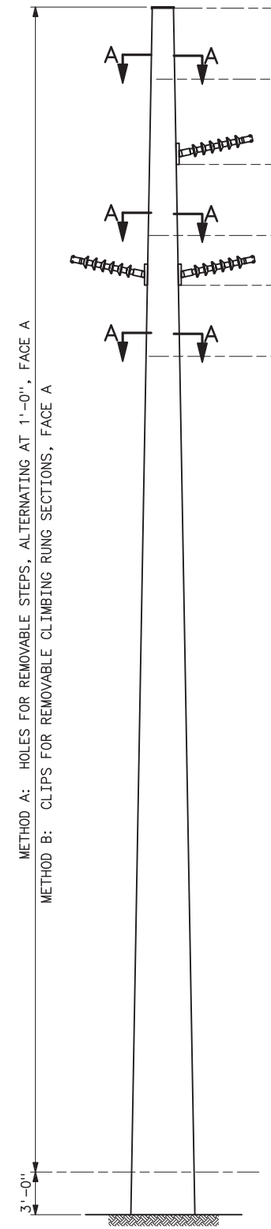

SINGLE POLE
FACE A

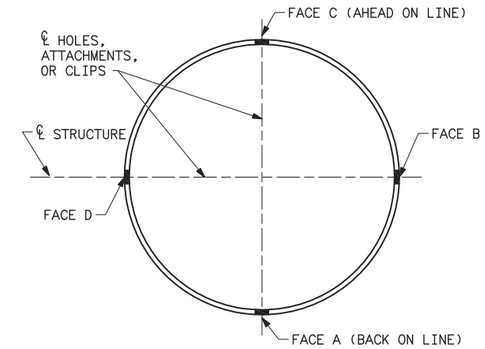

SECTION A-A

METHOD A
4-11/16"ø HOLES FOR REMOVABLE STEPS
METHOD B
4 SETS OF CLIPS FOR REMOVABLE CLIMBING RUNG SECTIONS

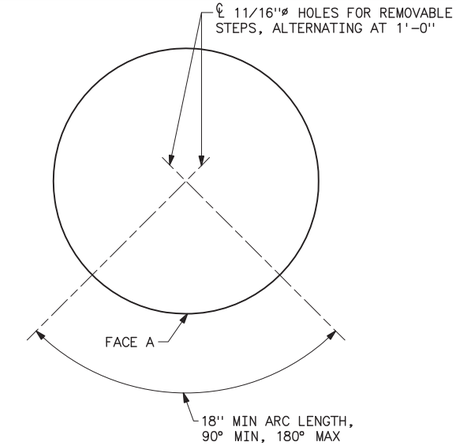

METHOD A
REMOVABLE STEP DETAIL

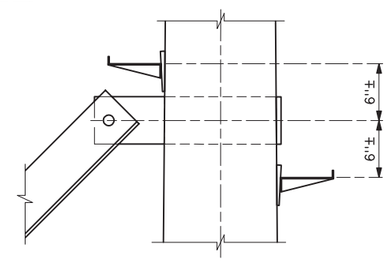

DETAIL A
METHOD A
REMOVABLE STEP SPACING TO LOWER X-BRACE ATTACHMENT

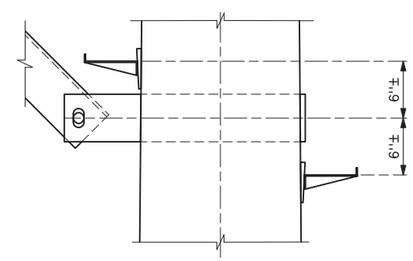

DETAIL B
METHOD A
REMOVABLE STEP SPACING TO LOWER X-BRACE ATTACHMENT

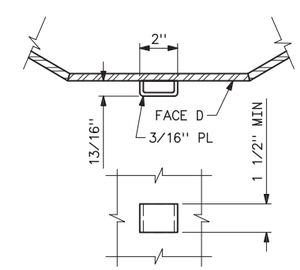

METHOD B
CLIP FOR REMOVABLE CLIMBING RUNG SECTIONS

NOTES

METHOD A:

1. REMOVABLE STEPS AND ATTACHMENTS SHALL BE EQUAL TO SUREFOOT STEPS AND LOCKING WEDGES AS MANUFACTURED BY NORTHPOWER LIMITED, 13 POLARIS PLACE, EAST TAMAKI, NEW ZEALAND, TELEPHONE 0-9-274-4545, FAX 0-9-274-4549.
2. ATTACH STEPS AND WEDGES DIRECTLY INTO 11/16"ø HOLES IN POLE SHAFT WALLS.
3. LOCATION OF HOLES FOR REMOVABLE STEPS SHALL PROVIDE FOR SMOOTH UNOBSTRUCTED CLIMBING FOR THE FULL LENGTH OF ALL POLE SHAFTS.
4. ALTERNATING SPACING FOR HOLES FOR REMOVABLE STEPS = 12" PLUS OR MINUS 1". STEP SPACING MAY VARY WITHIN ALLOWABLE TOLERANCES TO PROVIDE FOR UNOBSTRUCTED CLIMBING ACROSS X-BRACES.

ALTERNATIVE METHOD A:

5. CONTRACTOR PROPOSED AND WESTERN APPROVED EQUIVALENT CLIMBING SYSTEM.

METHODS A AND B:

FOR "X" DIMENSIONS, SEE SPECIFICATIONS.

6. OVERSLIP OF SLIP JOINTS SHALL NOT INTERFERE WITH
7. HOLES FOR REMOVABLE STEPS OR INSTALLATION OF REMOVABLE CLIMBING RUNG SECTIONS.

REFERENCE DRAWING

CLASS 2 EQUIVALENT STEEL
POLE H-FRAMES_____43-HS 2200

B	02-11-05 A7-BGH	ADDED ALTERNATIVE METHOD A.
A	03-06-03 A7-BGH	REVISED REMOVABLE STEP METHOD A TO SUREFOOT STEP AND LOCKING WEDGE SYSTEM.

UNITED STATES DEPARTMENT OF ENERGY
WESTERN AREA POWER ADMINISTRATION
CORPORATE SERVICES OFFICE - LAKEWOOD, COLORADO

LIGHT DUTY TRANSMISSION LINE
STEEL POLE STRUCTURES
CLIMBING PROVISIONS

DESIGNED BOBBY HAGLER _____ APPROVED DOUG HANSON _____
CIVIL ENGINEERING MANAGER

CAE	DECEMBER 07, 2000	43	2211

Mar 23, 2006- 1:53pm Plotted By:Seela IMAGES:
S:\Common\ahagler\43_2211b.dwg Last Saved By: JMCREE on Feb 11, 2005- 2:00pm

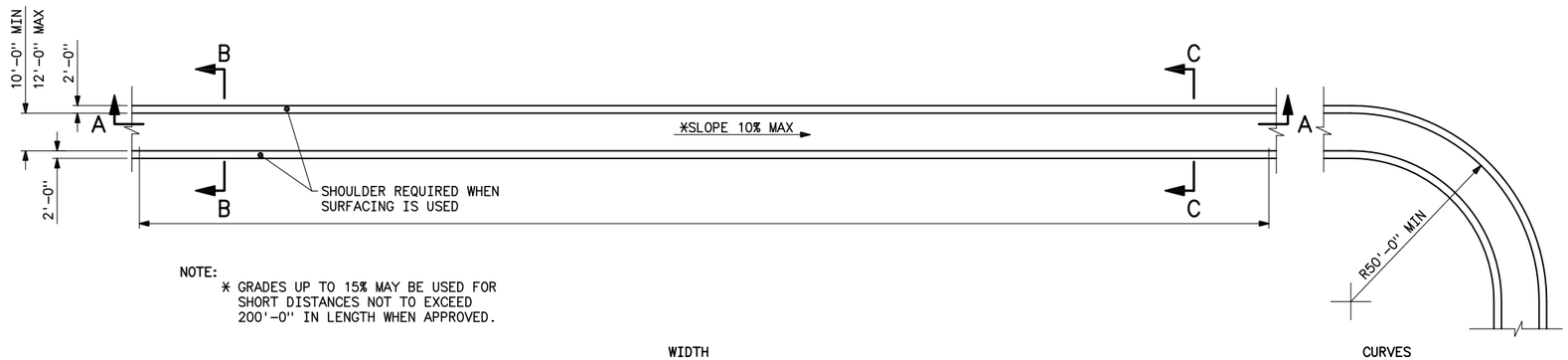

NOTE:
* GRADES UP TO 15% MAY BE USED FOR SHORT DISTANCES NOT TO EXCEED 200'-0" IN LENGTH WHEN APPROVED.

ACCESS ROADS

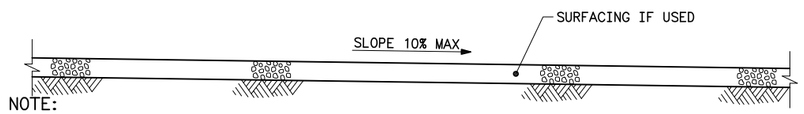

NOTE:
SLOPE GRADE 8% MAX ON SWITCHBACKS WHEN APPROVED.

SECTION A–A

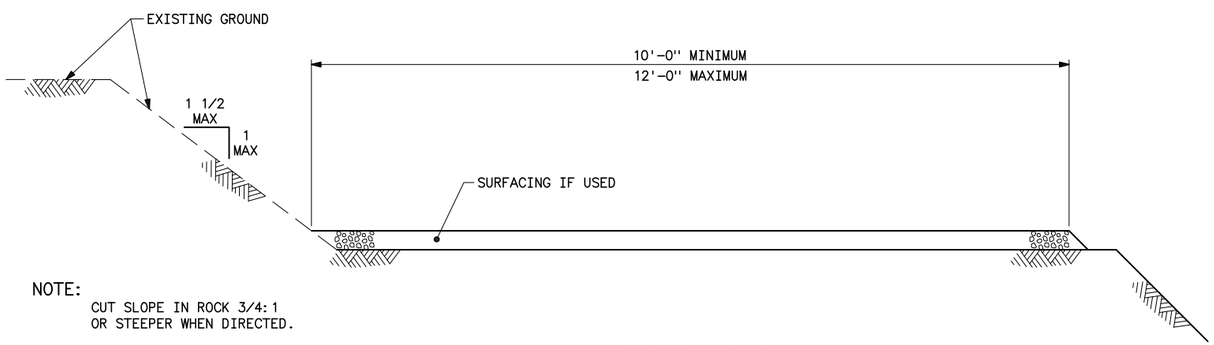

NOTE:
CUT SLOPE IN ROCK 3/4:1 OR STEEPER WHEN DIRECTED.

SECTION B–B

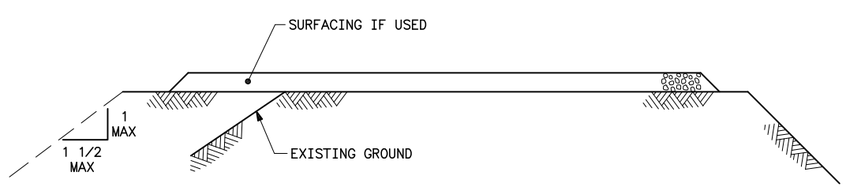

SECTION C–C

UNITED STATES DEPARTMENT OF ENERGY
WESTERN AREA POWER ADMINISTRATION
CORPORATE SERVICES OFFICE – LAKEWOOD, COLORADO

ACCESS ROAD STANDARDS
ACCESS ROADS
GENERAL REQUIREMENTS

DESIGNED DOUG HANSON APPROVED DOUG HANSON
CIVIL ENGINEERING MANAGER

CAE	OCTOBER 25, 2002	43	2212

SUITABLE FOR CONSTRUCTION AS OF: Jan 29, 2003- 3:47pm

Plotted By: lampman Sep 16, 2009- 3:40pm
IMAGES:
S:\Specifications\2009 Construction Standards\Standard Drawings\copy_43_2212.dwg Last Saved By: Eva Lampman on 9/16/2009 3:37 PM

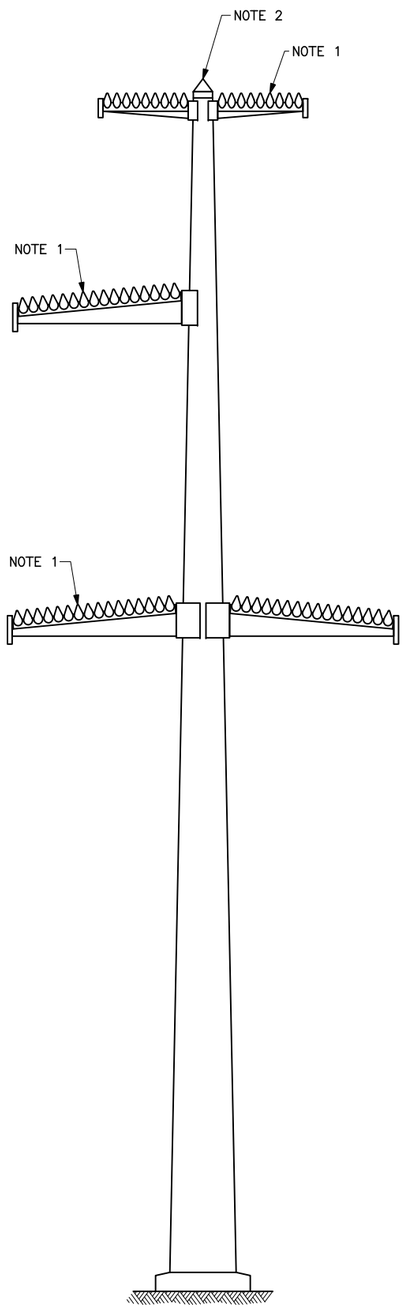

SINGLE POLE STRUCTURE
WITH DAVIT ARMS

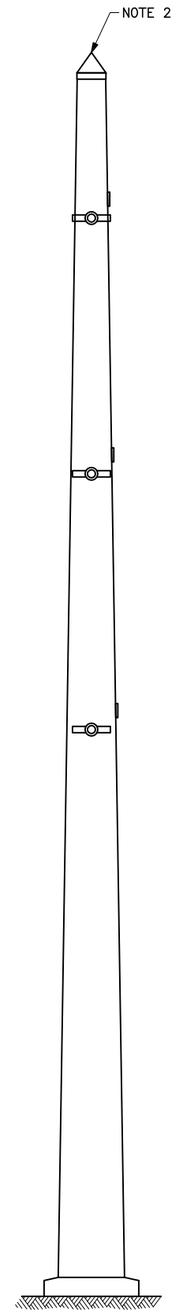

SINGLE POLE STRUCTURE
WITHOUT DAVIT ARMS

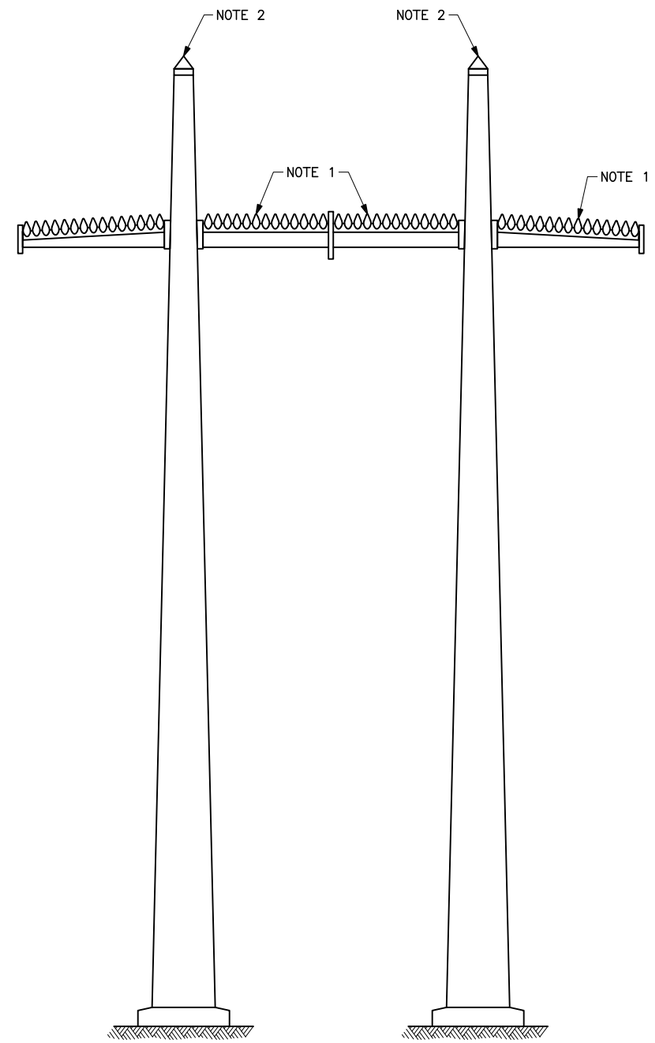

H-FRAME STRUCTURE
(Y-TYPE STRUCTURE SIMILAR)

NOTES

1. ANTI PERCH DEVICES FOR STEEL POLE DAVIT ARMS SHALL BE BLACK POLYETHYLENE WITH UV STABILIZER AND CONICAL IN SHAPE APPROXIMATELY 6" TALL. PERMANENTLY ATTACH THE DEVICES TO THE TOPS OF ALL OVERHEAD GROUNDWIRE AND CONDUCTOR DAVIT ARMS AND CROSSARMS WITH STAINLESS STEEL STRAPS. ANTI PERCH DEVICES SHALL COVER THE ENTIRE LENGTH OF THE ARMS AND SHALL BE EQUAL TO: ZENA PERCH PREVENTER MANUFACTURED BY ZENA OF PROMMEL ENTERPRISES INC., 12551 174TH COURT N., JUPITER. FL 33478.
2. ANTI PERCH DEVICES FOR THE POLE TOPS SHALL BE BLACK POLYETHYLENE WITH UV STABILIZER AND SHALL BE CONE-SHAPED APPROXIMATELY 17" TALL. PERMANENTLY ATTACH THE DEVICES TO ALL POLE TOPS WITH STAINLESS STEEL STRAPS OR BOLTS. DEVICES SHALL BE EQUAL TO: ZENA CONE MANUFACTURED BY ZENA OF PROMMEL ENTERPRISES INC., 12551 174TH COURT N., JUPITER. FL 33478.

EXCEPTION: ANTI PERCH DEVICES FOR THE POLE TOPS ARE NOT REQUIRED ON STRUCTURES WITH AERIAL PATROL MILE MARKER OR WARNING SIGNS MOUNTED TO POLE TOPS.

A	7-15-03 A7-DH	REVISED TITLE BLOCK ONLY.

UNITED STATES DEPARTMENT OF ENERGY
WESTERN AREA POWER ADMINISTRATION
CORPORATE SERVICES OFFICE - LAKEWOOD, COLORADO

TRANSMISSION LINE
STRUCTURE STANDARDS
STEEL POLE STRUCTURES
ANTI PERCH PROVISIONS

DESIGNED BOBBY HAGLER APPROVED DOUG HANSON
CIVIL ENGINEERING MANAGER

CAE	JANUARY 13 ,2003	43	2213

Plotted By: lampman Sep 16, 2009- 3:40pm
IWAGS:
S:\Specifications\2009 Construction Standards\Standard Drawings\copy_43_2213a.dwg Last Saved By: Eva Lampman on 9/16/2009 3:37 PM

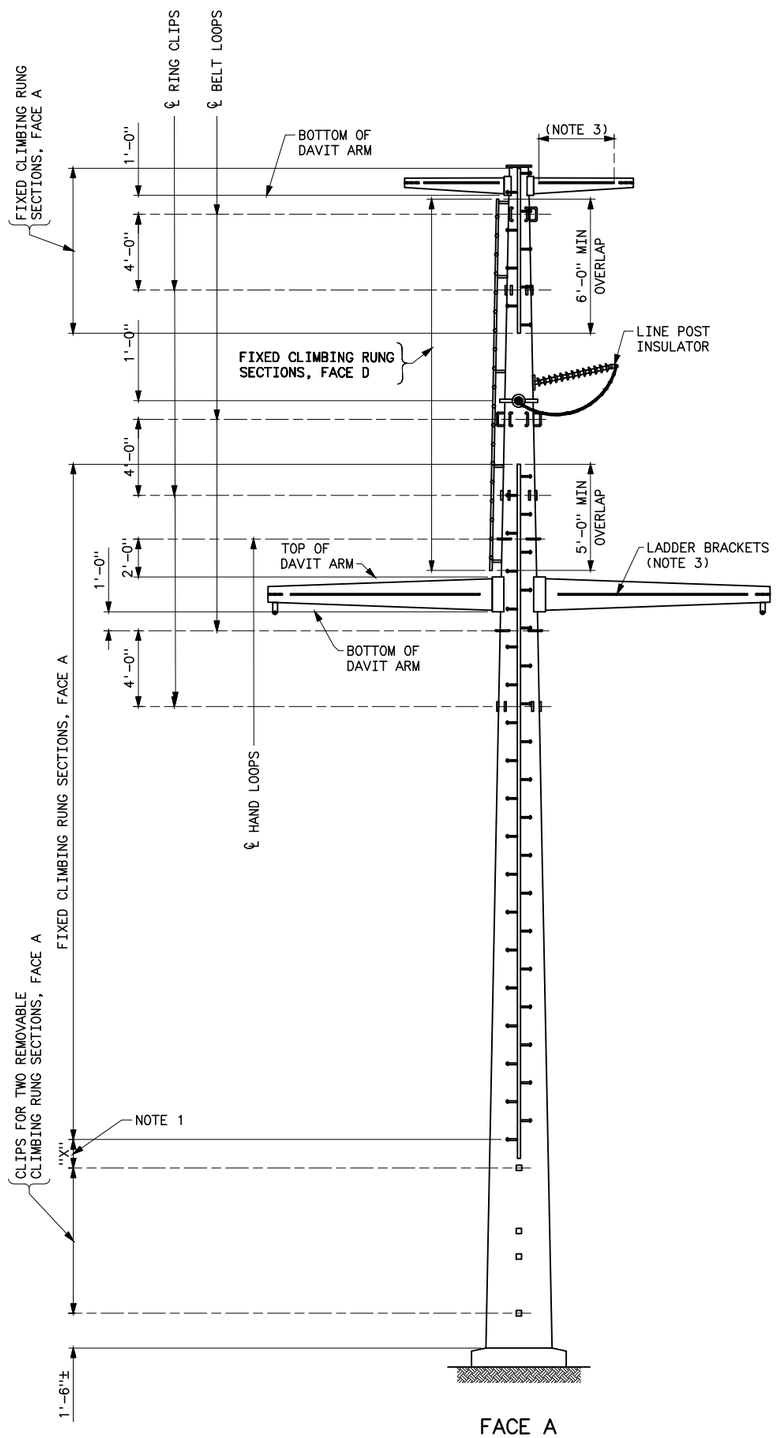

FACE A
SINGLE-CIRCUIT TENSION STRUCTURE
WITH CONDUCTOR & OGW DAVIT ARMS

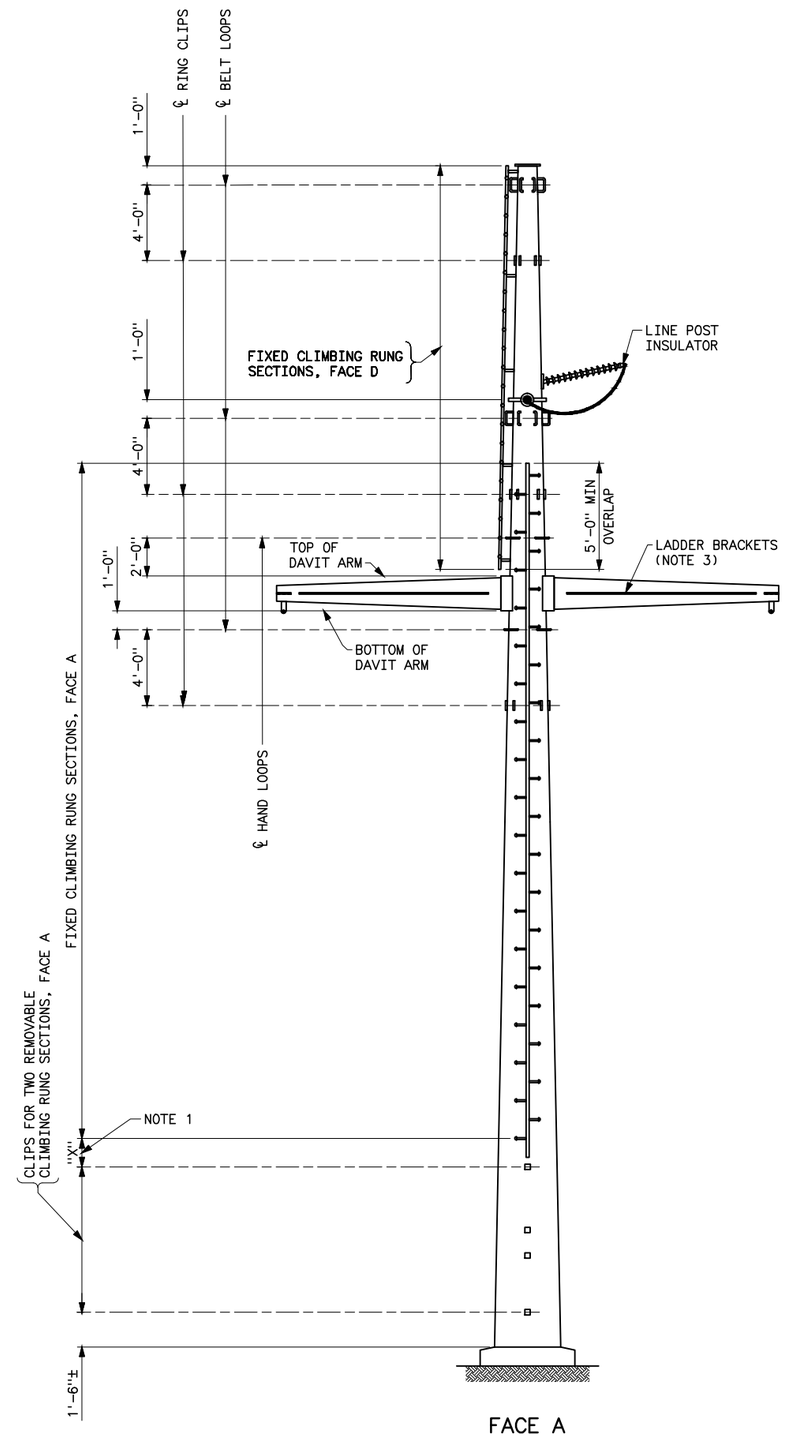

FACE A
SINGLE-CIRCUIT TENSION STRUCTURE
WITH CONDUCTOR DAVIT ARMS

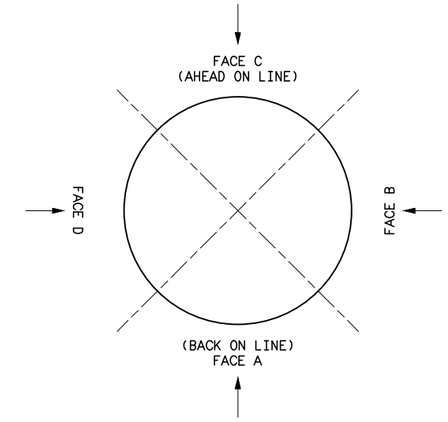

PLAN
(ALL VIEWS TAKEN LOOKING IN DIRECTION OF ARROW)

NOTES

1. "X" DIMENSION SHALL BE MINIMUM REQUIRED TO INSTALL TOP REMOVABLE CLIMBING RUNG SECTION.
2. DISTANCE FROM STEPS TO FACE OF POLE SHAFTS SHALL BE THE SAME FOR FIXED AND REMOVABLE CLIMBING RUNG SECTIONS.
3. PROVIDE LADDER BRACKETS ON DAVIT ARMS LONGER THAN 3'-0", AS SHOWN ON DRAWING 43 2210.
4. WELDS TO ATTACH MAINTENANCE PROVISIONS TO STRUCTURES SHALL DEVELOP THE ULTIMATE TENSILE STRENGTH OF THE ATTACHED PART.
5. FOR STRUCTURES WITH CONDUCTOR AND GROUND WIRE ATTACHMENT COMBINATIONS NOT SHOWN, PROVIDE ONLY THOSE MAINTENANCE PROVISIONS WHICH APPLY TO THAT TYPE OF ATTACHMENT.

REFERENCE DRAWINGS

MAINTENANCE PROVISIONS - DETAILS_ _ _ _ _ _ _43 2210
PERMANENT FALL PROTECTION - DETAILS_ _ _ _ _43 2215

A	2-4-15 A7-BGH	ADDED SINGLE-CIRCUIT TENSION STRUCTURE WITH CONDUCTOR DAVIT ARMS.

UNITED STATES DEPARTMENT OF ENERGY
WESTERN AREA POWER ADMINISTRATION
CORPORATE SERVICES OFFICE - LAKEWOOD, COLORADO

TRANSMISSION LINE
STRUCTURE STANDARDS
STEEL POLE STRUCTURES
MAINTENANCE PROVISIONS - OUTLINES

DESIGNED BOBBY HAGLER _ _ _ _ _ APPROVED DOUG HANSON _ _ _ _ _ _ _ _ _ _ _ _
CIVIL ENGINEERING MANAGER

CAE	JUNE 10, 2014	43	2214

Plotted By:Lampman on 9/12/2006 1:53 PM
IWGCS-S:\projects\Misc\StandardDrawings\Final\43_2214a.dwg Last Saved By: Lampman, Eva (CONTR) on 3/23/2015 2:23 PM

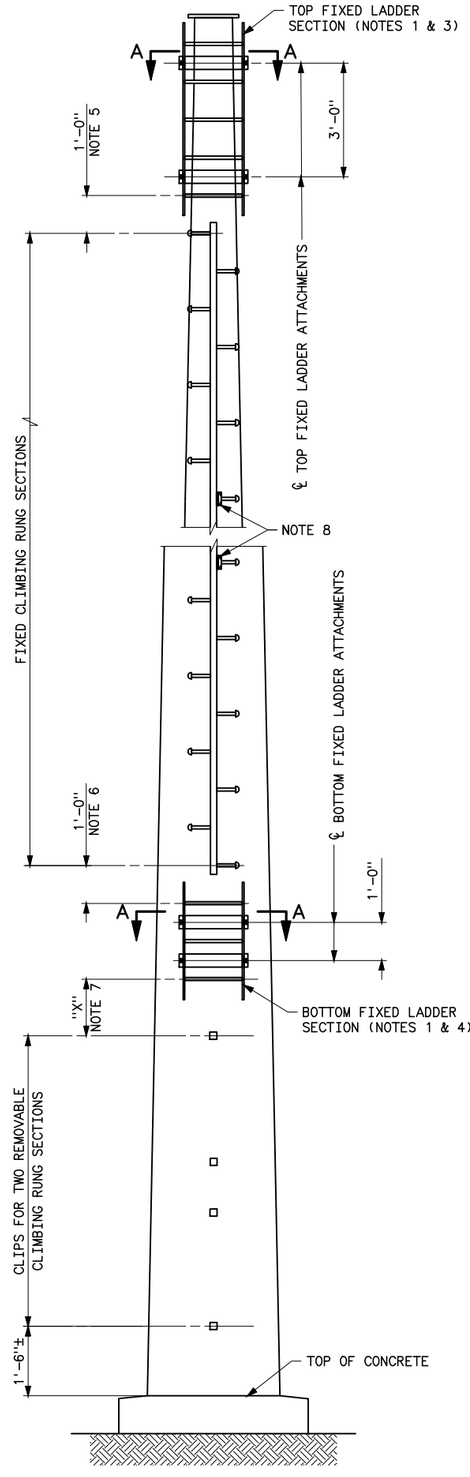

FACE A OR D
ALL POLE SHAFTS

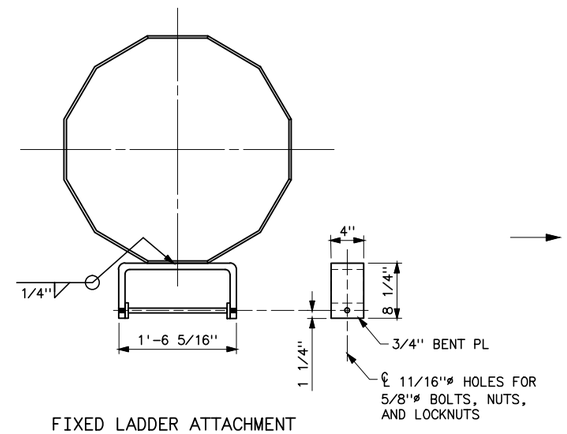

FIXED LADDER ATTACHMENT

SECTION A–A

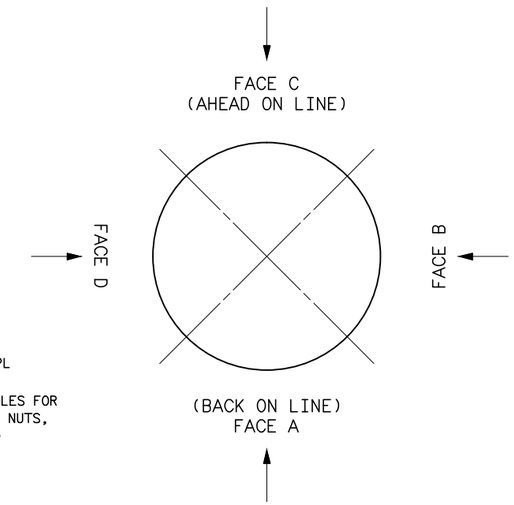

PLAN

(ALL VIEWS TAKEN LOOKING IN DIRECTION OF ARROW)

NOTES

1. ATTACH VERTICAL CABLE LIFELINE SYSTEM EQUAL TO MILLER VI-GO AUTOMATIC PASS-THROUGH VERTICAL CABLE LIFELINE SYSTEM TO TOP AND BOTTOM FIXED LADDER SECTIONS.
2. WHEN PERMANENT FALL PROTECTION IS REQUIRED, PROVIDE ALL MAINTENANCE PROVISIONS SHOWN ON MAINTENANCE PROVISIONS OUTLINES AND DETAILS DRAWINGS, EXCEPT WITH THE MODIFICATIONS LISTED IN NOTES 3 AND 4 BELOW.
3. REPLACE THE TOP 5 FEET OF FIXED CLIMBING RUNG SECTIONS SHOWN ON OUTLINE DRAWINGS WITH A 5-FOOT TOP FIXED LADDER SECTION AND TWO FIXED LADDER ATTACHMENTS. ATTACH TOP BRACKET ASSEMBLY OF FALL PROTECTION SYSTEM TO TOP FIXED LADDER SECTION.
4. REPLACE THE BOTTOM 3 FEET OF FIXED CLIMBING RUNG SECTIONS SHOWN ON OUTLINE DRAWINGS WITH A 3-FOOT BOTTOM FIXED LADDER SECTION AND TWO FIXED LADDER ATTACHMENTS. ATTACH BOTTOM BRACKET ASSEMBLY OF FALL PROTECTION SYSTEM TO BOTTOM FIXED LADDER SECTION.
5. DISTANCE FROM BOTTOM RUNG OF TOP FIXED LADDER SECTION TO TOP STEP OF TOP FIXED CLIMBING RUNG SECTION SHALL BE 1 FOOT.
6. DISTANCE FROM TOP RUNG OF BOTTOM FIXED LADDER SECTION TO BOTTOM STEP OF BOTTOM FIXED CLIMBING RUNG SECTION SHALL BE 1 FOOT.
7. "X" DIMENSION SHALL PROVIDE A DISTANCE OF 1 FOOT FROM BOTTOM RUNG OF BOTTOM FIXED LADDER SECTION TO TOP STEP OF TOP REMOVABLE CLIMBING RUNG SECTION.
8. INSTALL INTERMEDIATE AUTOMATIC PASS-THROUGH CABLE GUIDES AT 25-FOOT MAXIMUM INTERVALS ALONG THE CABLE FROM TOP BRACKET TO BOTTOM BRACKET. ATTACH GUIDES TO STEPS ON FIXED CLIMBING RUNG SECTIONS.

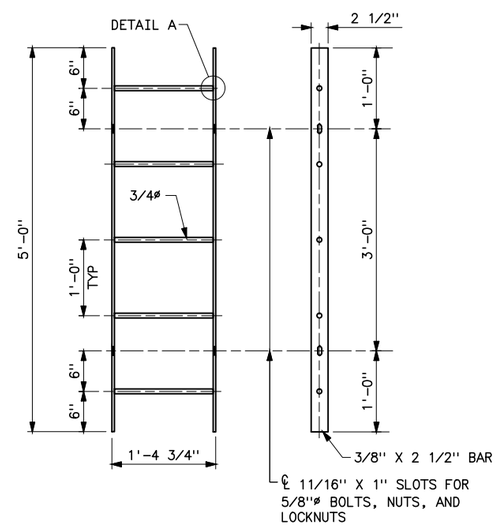

TOP FIXED LADDER SECTION

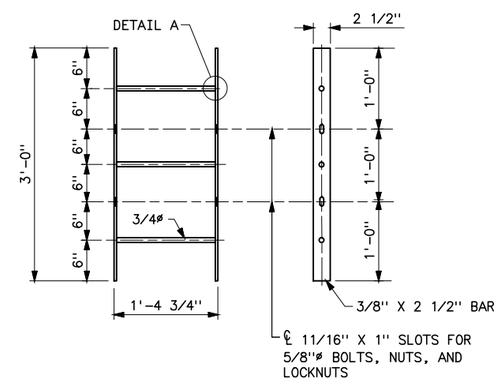

BOTTOM FIXED LADDER SECTION

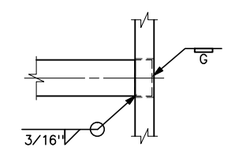

DETAIL A

REFERENCE DRAWINGS

MAINTENANCE PROVISIONS–
OUTLINES_____43 2206 THRU 2209, & 2214
DETAILS_____43 2210

UNITED STATES DEPARTMENT OF ENERGY
WESTERN AREA POWER ADMINISTRATION
CORPORATE SERVICES OFFICE – LAKEWOOD, COLORADO

TRANSMISSION LINE STEEL POLE STRUCTURE STANDARDS

MAINTENANCE PROVISIONS
PERMANENT FALL PROTECTION – DETAILS

DESIGNED BOBBY HAGLER APPROVED DOUG HANSON
CIVIL ENGINEERING MANAGER

CAD	FEBRUARY 5, 2015	43	2215

Plotted By: Lampman Mar 23, 2015– 2:17pm IMAGES:
S:\projects\Misc\StandardDrawings\Drawings\DesignDrawings\xDwgsReadyForFinal\Scripts\43_2215.dwg Last Saved By: Lampman, Eva (CONTR) on 3/23/2015 2:17 PM
XREF(S):

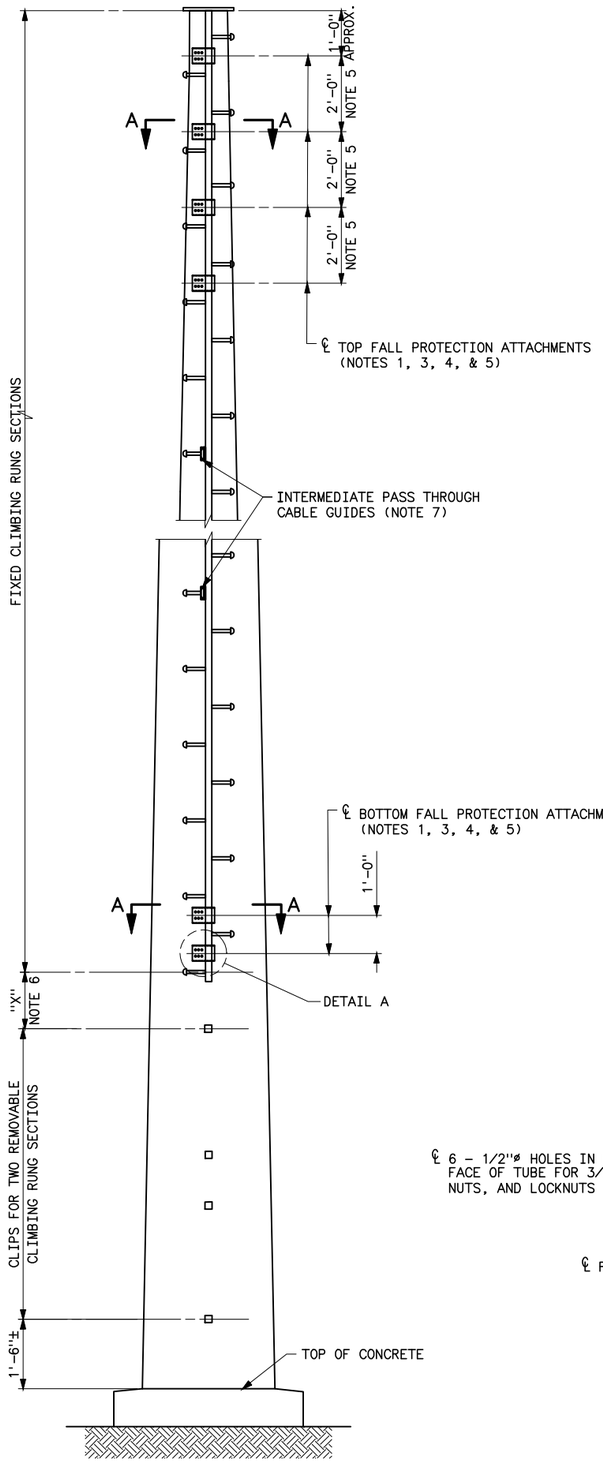

FACE A OR D
ALL POLE SHAFTS

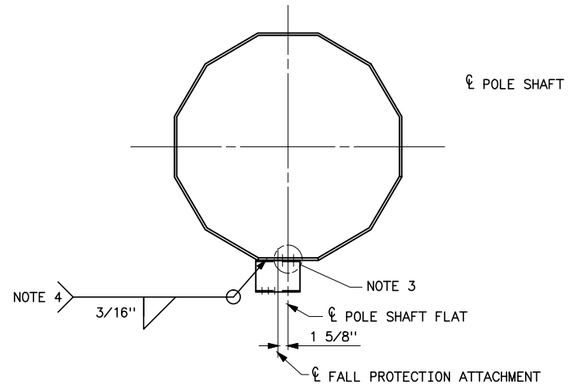

HSS TUBE FALL PROTECTION ATTACHMENT

SECTION A–A
(FIXED CLIMBING RUNG SECTIONS NOT SHOWN)

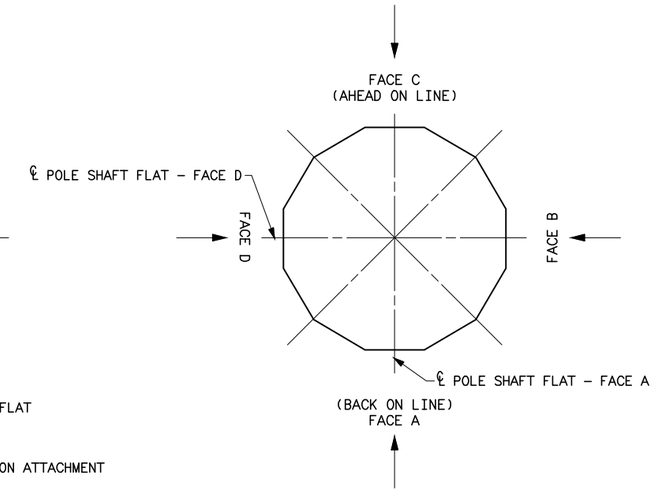

PLAN
(ALL VIEWS TAKEN LOOKING IN DIRECTION OF ARROW)

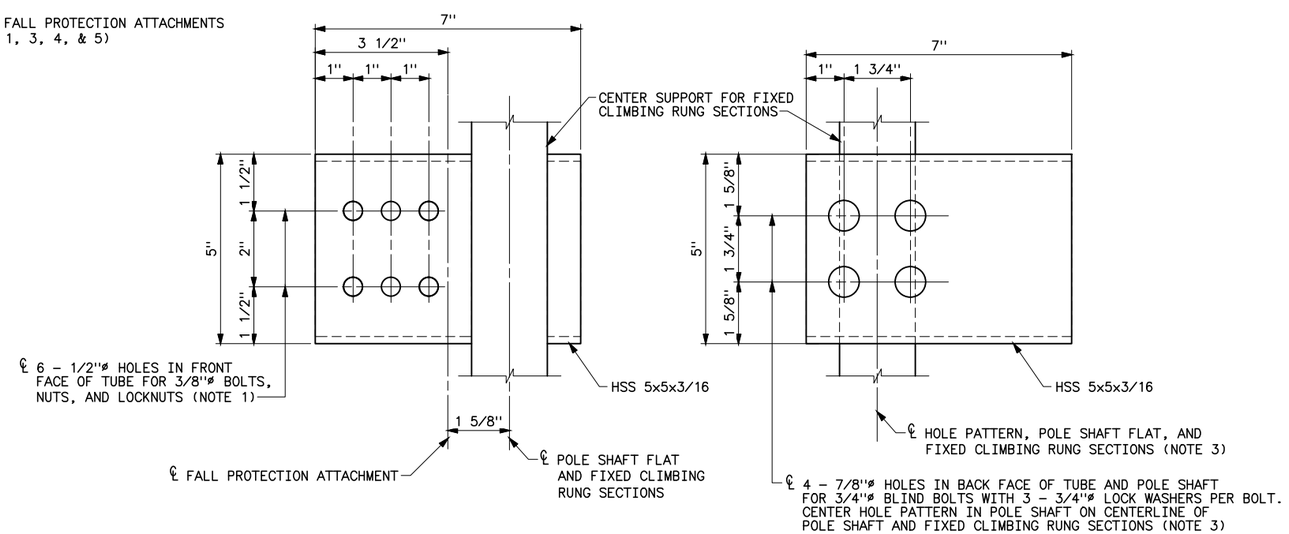

FRONT VIEW

BACK VIEW

HSS TUBE FALL PROTECTION ATTACHMENT

DETAIL A

NOTES

1. ATTACH MILLER VI-GO AUTOMATIC PASS-THROUGH VERTICAL CABLE LIFELINE SYSTEM, OR APPROVED EQUAL, TO TOP AND BOTTOM HSS TUBE FALL PROTECTION ATTACHMENTS WITH 3/8"ø BOLTS, NUTS, AND LOCKNUTS.
2. PROVIDE ALL APPLICABLE MAINTENANCE PROVISIONS SHOWN ON MAINTENANCE PROVISIONS REFERENCE DRAWINGS LISTED BELOW.
3. FOR RETROFIT STRUCTURES ONLY:
   BLIND BOLT ATTACHMENT METHOD:
   SIX (6) FALL PROTECTION ATTACHMENTS ARE REQUIRED FOR EACH POLE SHAFT FACE WITH FIXED CLIMBING RUNG SECTIONS.
   DRILL FOUR (4) 7/8"ø HOLES FOR EACH FALL PROTECTION ATTACHMENT IN POLE SHAFT FLAT DIRECTLY BEHIND FIXED CLIMBING RUNG SECTIONS. HOLE PATTERN SHALL BE AS SHOWN IN DETAIL A – BACK VIEW.
   ATTACH FALL PROTECTION ATTACHMENTS TO POLE SHAFT WITH FOUR (4) – 3/4"ø HIGH TENSILE BLIND BOLTS WITH DACRALON CORROSION RESISTANCE FINISH AS MANUFACTURED BY ABRAFAST, OR APPROVED EQUAL. INSTALL THREE (3) 3/4"ø GALVANIZED LOCK WASHERS PER BLIND BOLT ON INSIDE OF HSS TUBE PRIOR TO TIGHTENING NUTS. TWENTY-FOUR (24) BLIND BOLTS AND SEVENTY-TWO (72) LOCK WASHERS ARE REQUIRED FOR EACH POLE SHAFT FACE WITH VERTICAL CABLE LIFELINE SYSTEM. INSTALL BLIND BOLTS IN ACCORDANCE WITH MANUFACTURER'S INSTRUCTIONS.
   OPTIONAL WELDING ATTACHMENT METHOD:
   WELD FALL PROTECTION ATTACHMENTS TO POLE SHAFT IN ACCORDANCE WITH NOTE 4. FOR GALVANIZED STRUCTURES, GRIND AREAS TO BE WELDED AND REPAIR IN ACCORDANCE WITH ASTM A 780.
4. FOR NEW STRUCTURES ONLY:
   WELD SIX (6) FALL PROTECTION ATTACHMENTS TO EACH POLE SHAFT FACE WITH FIXED CLIMBING RUNG SECTIONS. WELD EACH ATTACHMENT ALL AROUND WITH 3/16" FILLET WELD IN ACCORDANCE WITH AWS D1.1. LOCATE FALL PROTECTION ATTACHMENTS DIRECTLY BEHIND FIXED CLIMBING RUNG SECTIONS AS SHOWN IN FRONT VIEW OF DETAIL A.
5. LOCATE TOP AND BOTTOM FALL PROTECTION ATTACHMENTS AS CLOSE AS POSSIBLE TO TOP AND BOTTOM OF FIXED CLIMBING RUNG SECTIONS TO NOT INTERFERE WITH ATTACHMENTS FOR FIXED CLIMBING RUNG SECTIONS.
6. "X" DIMENSION SHALL PROVIDE A DISTANCE OF 1 FOOT FROM BOTTOM RUNG OF BOTTOM FIXED LADDER SECTION TO TOP STEP OF TOP REMOVABLE CLIMBING RUNG SECTION.
7. INSTALL INTERMEDIATE AUTOMATIC PASS-THROUGH CABLE GUIDES AT 25-FOOT MAXIMUM INTERVALS ALONG THE CABLE FROM TOP BRACKET ASSEMBLY TO BOTTOM BRACKET ASSEMBLY. ATTACH GUIDES TO STEPS ON FIXED CLIMBING RUNG SECTIONS. ALIGN GUIDES WITH CABLE ON VERTICAL CABLE LIFELINE SYSTEM

REFERENCE DRAWINGS

MAINTENANCE PROVISIONS–
OUTLINES_____43 2206 THRU 2209, & 2214
DETAILS_____43 2210

A	3/4/2015 A7-BEP	ADDED ADDITIONAL FALL PROTECTION ATTATCHMENTS

UNITED STATES DEPARTMENT OF ENERGY
WESTERN AREA POWER ADMINISTRATION
CORPORATE SERVICES OFFICE – LAKEWOOD, COLORADO

TRANSMISSION LINE STEEL POLE STRUCTURE STANDARDS
MAINTENANCE PROVISIONS
PERMANENT FALL PROTECTION – DETAILS

DESIGNED BRONSON PERRY APPROVED DOUG HANSON
CIVIL ENGINEERING MANAGER

CAD	FEBRUARY 20, 2015	43	2216

Plotted By: Lampman Mar 23, 2015– 2:18pm IMAGES:
S:\projects\Misc\StandardDrawings\DesignDrawings\DwgsReadyForFinal\Scripts\43_2216a.dwg Last Saved By: Lampman, Eva (CONTR) on 3/23/2015 2:18 PM
XREF(S):

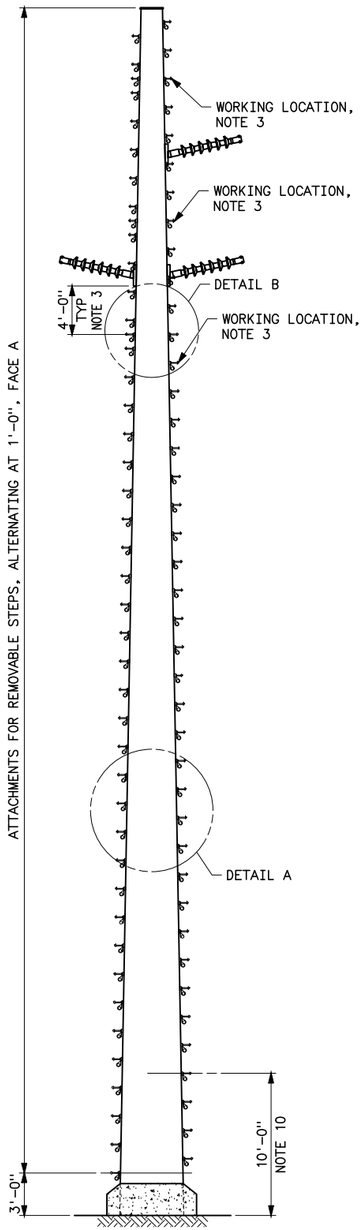

SINGLE POLE
FACE A

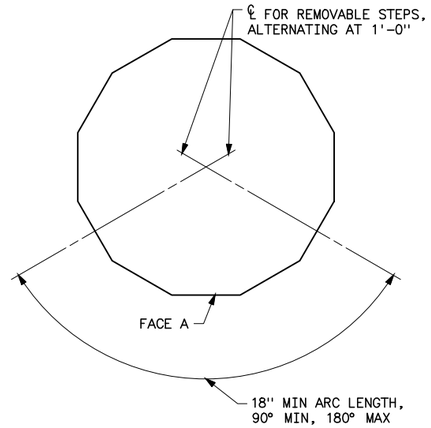

REMOVABLE STEP DETAIL

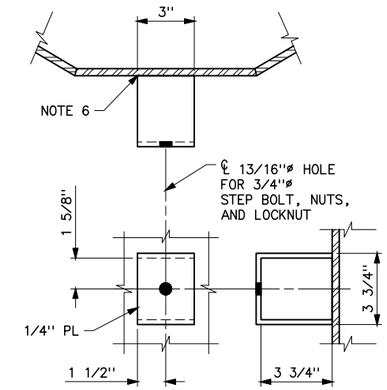

ATTACHMENT FOR REMOVABLE STEPS

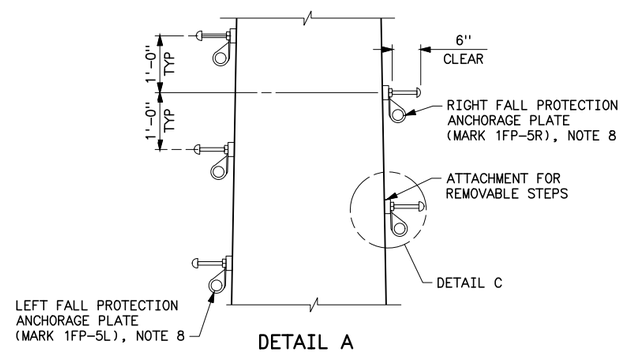

DETAIL A
TYPICAL STEP BOLT ARRANGEMENT

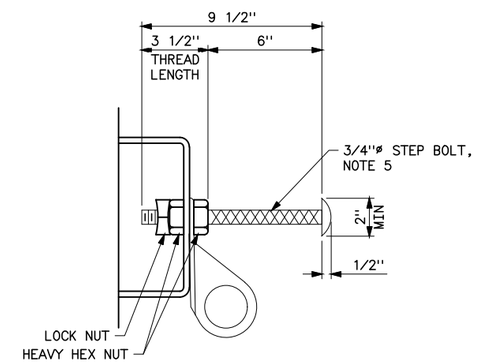

DETAIL C

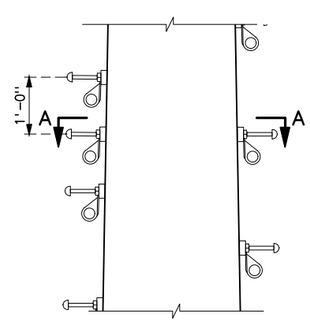

DETAIL B
TYPICAL WORKING LOCATION

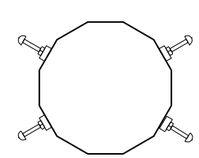

SECTION A–A

NOTES

1. LOCATION OF HOLES FOR REMOVABLE STEPS SHALL PROVIDE FOR SMOOTH UNOBSTRUCTED CLIMBING FOR THE FULL LENGTH OF ALL POLE SHAFTS.
2. ALTERNATING SPACING FOR HOLES FOR REMOVABLE STEPS = 12" PLUS OR MINUS 1". STEP SPACING MAY VARY WITHIN ALLOWABLE TOLERANCES TO PROVIDE FOR UNOBSTRUCTED CLIMBING ACCESS.
3. WORKING LOCATIONS ARE TO BE LOCATED APPROXIMATELY 4'-0" BELOW OGW AND CONDUCTOR ELEVATIONS.
4. STEEL PLATE:
   - GALVANIZED STRUCTURES: ASTM A572. GALVANIZE ALL MATERIAL AFTER FABRICATION.
   - WEATHERING STEEL STRUCTURES: ASTM A242, ASTM A588, OR ASTM A871.
5. STEP BOLTS:
   - GALVANIZED STRUCTURES: ASTM A325, ASTM A354 GRADE BC, OR ASTM A394 TYPE I. GALVANIZE ALL MATERIAL AFTER FABRICATION.
   - WEATHERING STEEL STRUCTURES: ASTM A325 TYPE 3, ASTM A354 GRADE BC MODIFIED, OR ASTM A394 TYPE 3.

   STEP BOLTS SHALL BE CORRUGATED, KNURLED, DIMPLED, OR OTHERWISE TREATED TO MINIMIZE SLIPPING. COATING WITH SKID-RESISTANT MATERIAL IS NOT ACCEPTABLE.
6. WELDS TO ATTACH MAINTENANCE PROVISIONS TO STRUCTURES SHALL DEVELOP THE ULTIMATE TENSILE STRENGTH OF THE ATTACHED PART.
7. INSIDE BEND RADIUS FOR 1/4" PLATE: 3/8".
8. ANCHORAGE PLATE MARK NUMBER – KEY TO DESIGNATIONS:
   - FP DENOTES "FLANGE PLATES";
   - 5 DENOTES STRENGTH OF PLATE IN KIPS;
   - R AND L DENOTE RIGHT AND LEFT ANCHORAGE PLATE.
9. INSTALLATION INSTRUCTIONS:
   - INSTALL ANCHORAGE PLATES FLUSH WITH CENTER OF ATTACHMENT.
   - SECURE ANCHORAGE PLATE TO ATTACHMENT USING 3/4"ø STEP BOLT, 1 NUT ON THE OUTSIDE OF THE PLATE AND 1 NUT AND LOCKNUT ON THE INSIDE OF THE ATTACHMENT.
   - ENSURE THAT PLATES DO NOT MOVE AFTER INSTALLATION.
10. INSTALL BOTTOM 10 FEET OF STEP BOLTS AND ANCHORAGE PLATES ONLY WHEN CLIMBING, AND REMOVE AFTER CLIMBING.
11. ALTERNATIVE METHODS FOR REMOVABLE STEPS AND ATTACHMENTS MAY BE SUBMITTED FOR APPROVAL.

REFERENCE DRAWING

STEEL POLE STRUCTURES AND LATTICE TOWERS – FALL PROTECTION ANCHORAGE PLATES _____ 41 2701

A	10-11-16 A7-JAM	NOTE 5 REVISIONS.

UNITED STATES DEPARTMENT OF ENERGY
WESTERN AREA POWER ADMINISTRATION
HEADQUARTERS – LAKEWOOD, COLORADO

TRANSMISSION LINE
STRUCTURE STANDARDS
LIGHT DUTY STEEL POLE STRUCTURES
MAINTENANCE PROVISIONS – DETAILS

DESIGNED JEFFREY A. MILLER, P.E. APPROVED DOUG HANSON CIVIL ENGINEERING MANAGER

CAD	NOVEMBER 18, 2015	43	2217

Plotted By:denton Oct 11, 2016- 9:38am IMAGES:
S:\projects\Misc\StandardDrawings\DesignDrawings\xDwgsReadyForFinal\Scripts\43_2217a.dwg Last Saved By: Denton, Debra on 10/11/2016 9:37 AM
XREF(S):

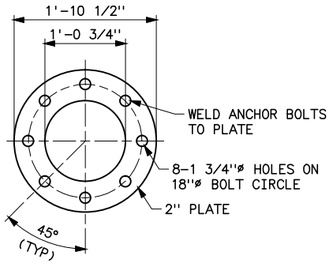

SECTION A-A
BASE PLATE

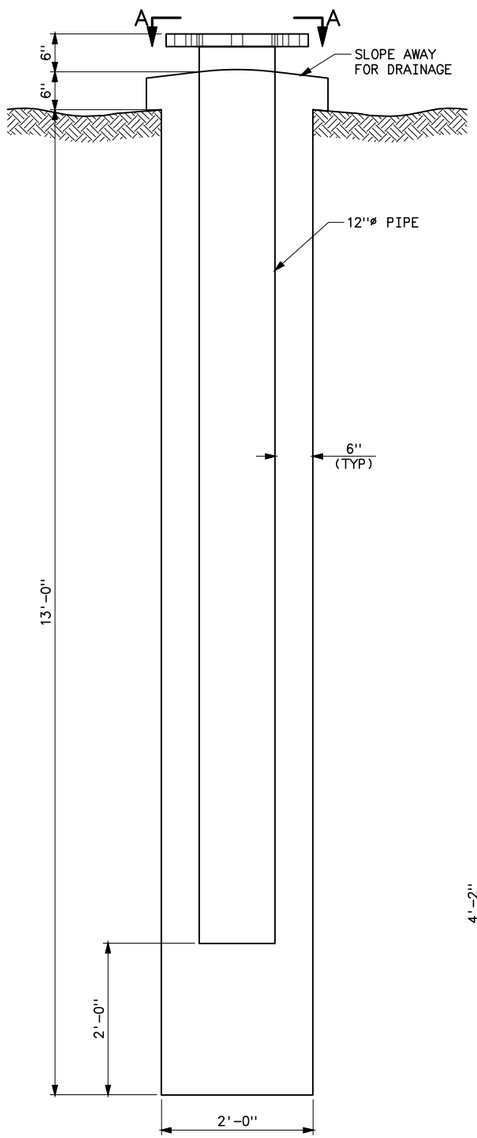

MONOPOLE FOUNDATION
AUGER TYPE

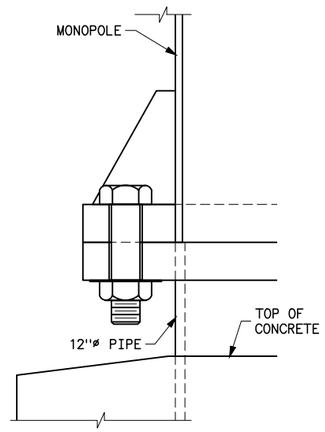

BOLTED
AUGER TYPE

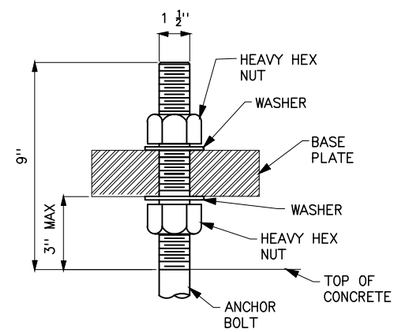

ANCHOR BOLTS
PAD TYPE (TYP)

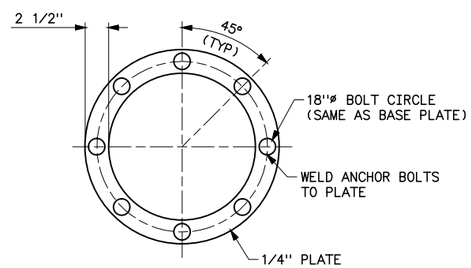

SECTION B-B
ANCHOR BOLT TEMPLATE (2 REQUIRED)

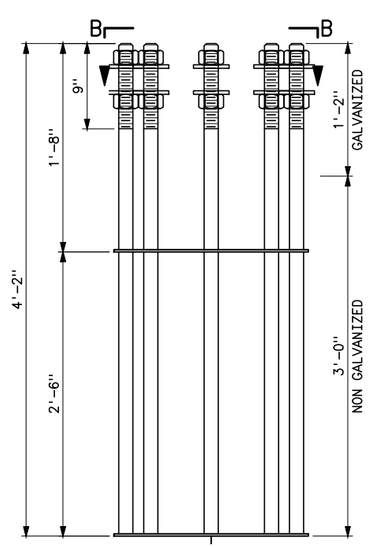

ANCHOR BOLT WELDMENT

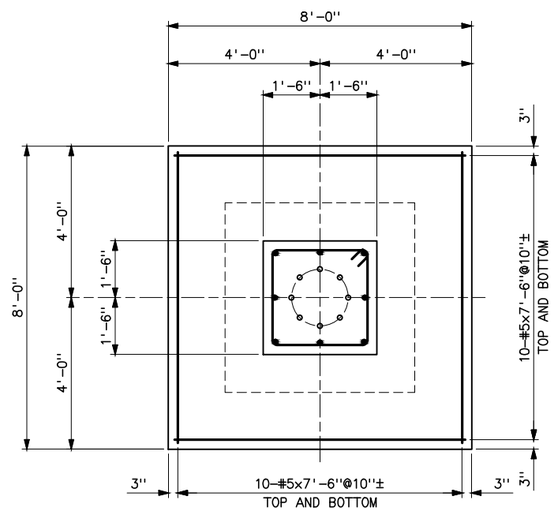

PLAN

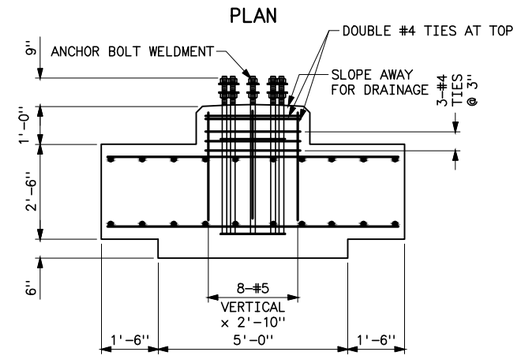

ELEVATION

MONOPOLE FOUNDATION
PAD TYPE

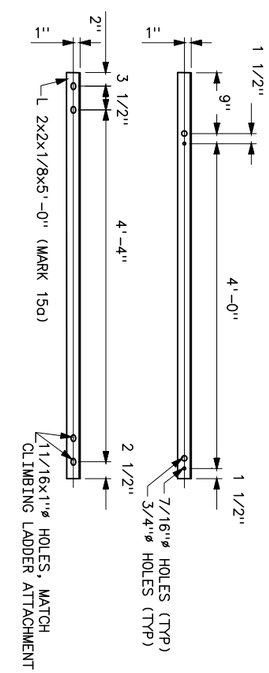

WAVEGUIDE LADDER

NO.	AUGER TYPE PARTS	WT.
1	12"x0.5" WALL BY 12'-0" PIPE	785.0
1	2" BASE PLATE, 1'-10 1/2" DIAMETER	153.0
8	1 1/2"øx6 1/4" - A325 BOLTS	
8	NUTS FOR 1 1/2"ø - A325 BOLTS	22.0
8	PALNUTS FOR 1 1/2"ø - A325 BOLTS	
TOTAL WEIGHT		960.0

NO.	PAD TYPE PARTS	WT.
1	8-1 1/2"øx4'-0" ANCHOR BOLT WELDMENT	215.2
2	1/4" TEMPLATE, 1'-8 1/2"	34.8
16	NUTS AND WASHERS FOR 1 1/2"ø ANCHOR BOLTS	24.8
1	1/2" TEMPLATE, 1'-8 1/2"	34.8
TOTAL WEIGHT		309.6

NOTES

1. USE f'c=4000 PSI CONCRETE, ASTM C150 OR EQUAL, WITH REQUIRED ADMIXTURES OF AIR ENTRAINMENT AND/OR WATER REDUCING AGENTS AS NEEDED.
2. WET HOLE IF REQUIRED TO PREVENT DRYING OF CONCRETE.
3. COVER OVER CONCRETE WITH PLASTIC FOR THE FIRST 24 HOURS.
4. SURFACE CONCRETE CAN BE FORMED ROUND OR SQUARE AS PREFERRED.
5. MINIMUM COVER ON CONCRETE IS 3 INCHES UNLESS SHOWN.
6. ALL REBAR Fy=60,000 PSI.
7. ALL BOLTS AND NUTS SHALL BE GALVANIZED. ENTIRE 12" PIPE AND BASEPLATE SHALL BE GALVANIZED.
8. ANCHOR BOLTS ARE ASTM F1554 GRADE 55 AND ALSO MEET S1 FOR WELDABILITY. NUTS SHALL MEET A563 GRADE 55 AND WASHERS SHALL MEET F436..

REFERENCE DRAWING

20 FT MONOPOLE - OUTLINE_____43-20MW 2200
20 FT MONOPOLE FOUNDATION -
DRILLED AUGER TYPE_____43-20MW 2202

A	9-20-16 A7-CTG	MODIFIED ANCHOR BOLT WELDMENT AND ADDED WAVEGUIDE LADDER.

UNITED STATES DEPARTMENT OF ENERGY
WESTERN AREA POWER ADMINISTRATION
CORPORATE SERVICES OFFICE - LAKEWOOD, COLORADO

STANDARD MICROWAVE TOWER
20 FT MONOPOLE FOUNDATION
AUGER AND PAD TYPE

DESIGNED CHARLIE GARCIA APPROVED DOUG HANSON CIVIL ENGINEERING MANAGER

CAE | OCTOBER 11, 2011 | 43-20MW | 2201

Plotted By:Seela on ----
IMAGES:
S:\projects\Misc\StandardDrawings\Drawings\DesignDrawings\x0wgsReadyForFinal\Scripts\43_20_m_w_2201a.dwg Last Saved By: Seela, Holly (CONTR) on 9/27/2016 2:11 PM

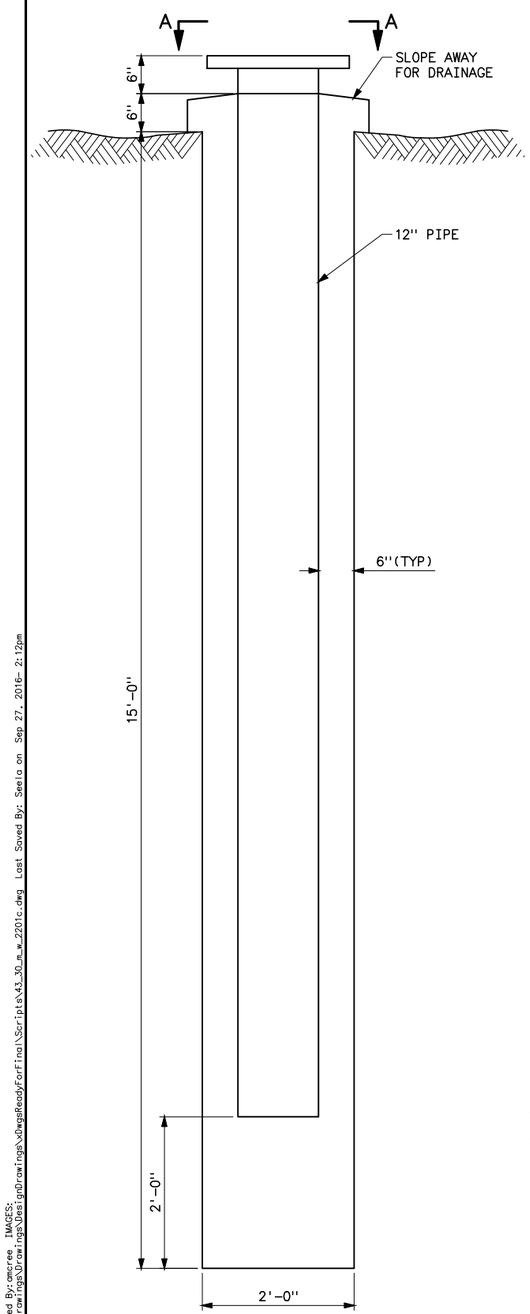

MONOPOLE FOUNDATION
AUGER TYPE

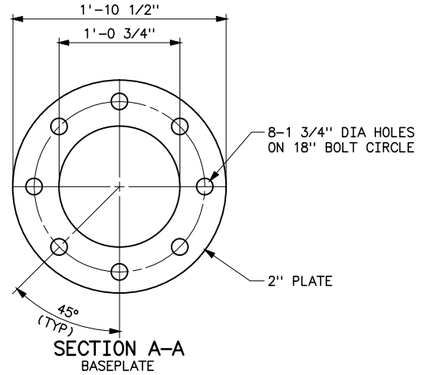

SECTION A-A
BASEPLATE

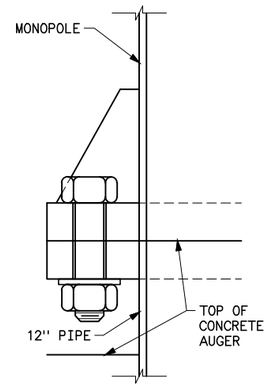

BOLTED
AUGER TYPE

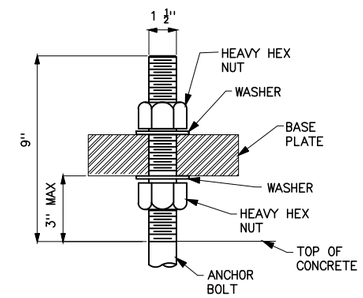

ANCHOR BOLTS
PAD TYPE (TYP)

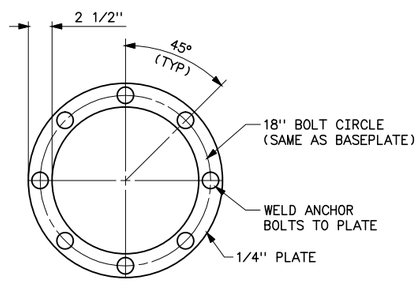

SECTION B-B
ANCHOR BOLT TEMPLATE
2 REQUIRED

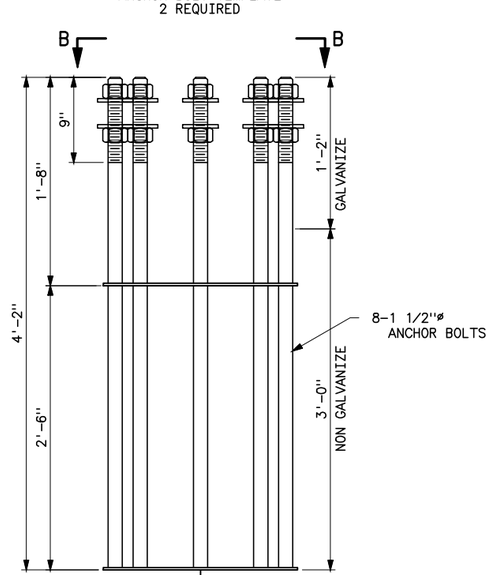

ANCHOR BOLT WELDMENT

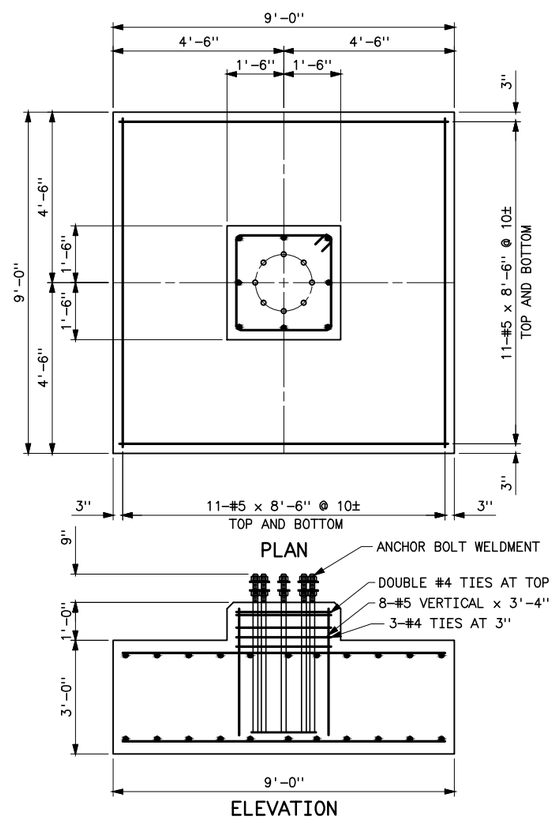

ELEVATION

MONOPOLE FOUNDATION
PAD TYPE
(9.4 CU YDS)

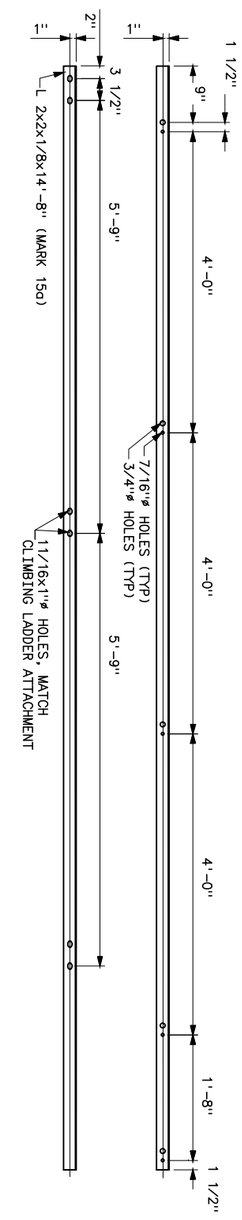

WAVEGUIDE LADDER
(2200)
24.2 LBS

NO.	AUGER TYPE PARTS	WT
1	12"x0.5" WALL BY 14'-0" PIPE	915.9
1	2" SPLICE PLATE, 1'-10 1/2" DIAMETER	153.1
8	1 1/2" DIA x 6 1/4" - A325 BOLTS	
8	NUTS FOR 1 1/2" DIA A325 BOLTS	22
8	WASHERS FOR 1 1/2" DIA A325 BOLTS	
8	PALNUTS FOR 1 1/2" DIA BOLTS	
TOTAL WEIGHT		1091.0

NO.	PAD TYPE PARTS	WT
1	8-1 1/2"x4'-2" ANCHOR BOLT WELDMENT	250.8
16	NUTS AND WASHERS FOR 1 1/2" DIA ANCHOR BOLTS	24
8	PALNUTS FOR 1 1/2" DIA BOLTS	
TOTAL WEIGHT		274.8

NOTES

1. USE f'c = 4000 PSI CONCRETE, ASTM C150 OR EQUAL, WITH REQUIRED ADMIXTURES OF AIR ENTRAINMENT AND/OR WATER REDUCING AGENTS AS NEEDED.
2. WET HOLE IF REQUIRED TO PREVENT DRYING OF CONCRETE.
3. COVER OVER CONCRETE WITH PLASTIC FOR THE FIRST 24 HOURS.
4. SURFACE CONCRETE CAN BE FORMED ROUND OR SQUARE AS PREFERRED.
5. MINIMUM COVER ON CONCRETE IS 3 INCHES UNLESS SHOWN.
6. ALL REBAR Fy = 60,000 PSI.
7. ALL BOLTS AND NUTS SHALL BE GALVANIZED. ENTIRE 12" PIPE AND BASEPLATE SHALL BE GALVANIZED.
8. ANCHOR BOLTS ARE ASTM F1554 GRADE 55 AND ALSO MEET S1 FOR WELDABILITY. NUTS SHALL MEET A563, GRADE 55 AND WASHERS SHALL MEET F436.

REFERENCE DRAWING

30 FT MONOPOLE _____ 43-30MW 2200

C	9-19-16 A7-CTG	MODIFIED ANCHOR BOLTS AND TYPE.
B	10-11-13 A7-CG	ADDED WAVEGUIDE LADDER ANGLES, MATERIAL ON DRAWING 2200, AND CHANGED ANCHOR BOLTS.
A	6-1-11 A7-CG	INCREASED THREADS ON ANCHOR BOLTS AND MODIFIED PAD TYPE FOUNDATION.

UNITED STATES DEPARTMENT OF ENERGY
WESTERN AREA POWER ADMINISTRATION
CORPORATE SERVICES OFFICE - LAKEWOOD, COLORADO

STANDARD MICROWAVE TOWER

MONOPOLE FOUNDATIONS
AUGER AND PAD TYPE

DESIGNED C. GARCIA _____ APPROVED D. HANSON _____
CIVIL ENGINEERING MANAGER

CAE | FEBRUARY 3, 2003 | 43-30MW | 2201

Nov 14, 2005- 5:42pm Plotted By:amcree IMAGES:
S:\projects\Misc\Standard\Drawings\Drawings\DesignDrawings\DwgsReadyForFinal\Scripts\43_30_m_w_2201c.dwg Last Saved By: Seela on Sep 27, 2016- 2:12pm

DRILLED VERTICAL AUGER TYPE

SOIL	N	H (FT.-IN.)	D1 (FT.-IN.)	ANCHOR COMPRESSION (KIPS)	SHEAR (KIPS)	MOMENT (FT/KIPS)	CUBIC YARD	LONGITUDINAL REINFORCEMENT	TIES
SAND OR CLAY	NOTE 5	14'-0"	3'-6"	-6.0	6.5	130.0	5.0	12-#6x13'-6"	21-#4x11'-0"

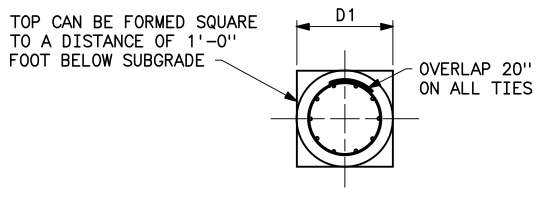

PLAN

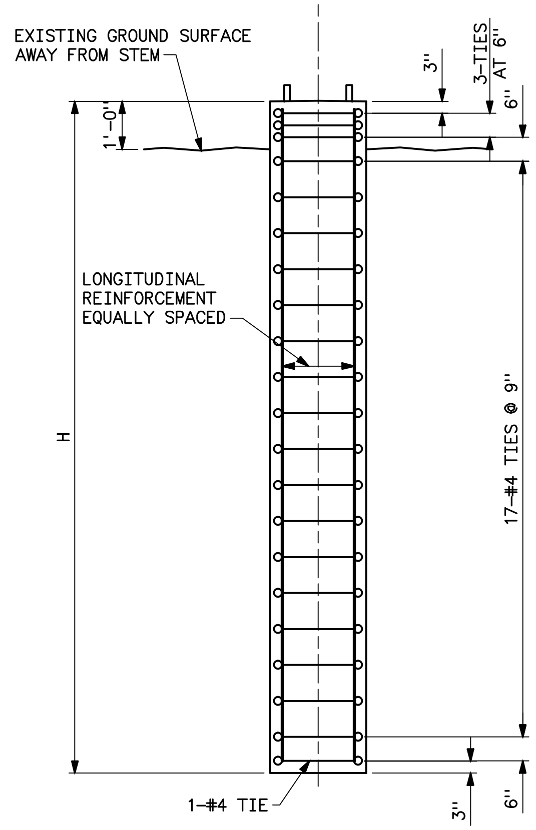

ELEVATION
DRILLED AUGER TYPE

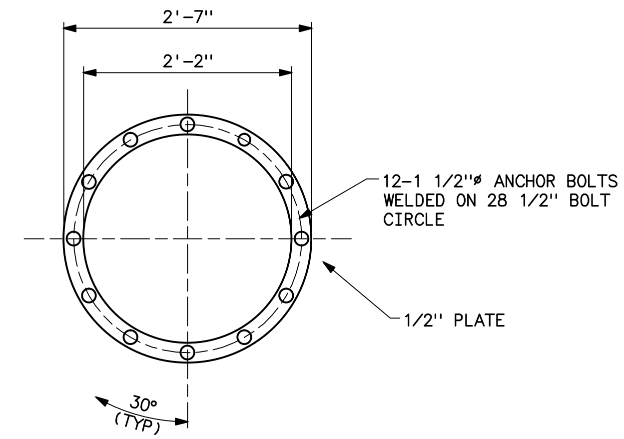

SECTION A-A
BASEPLATE

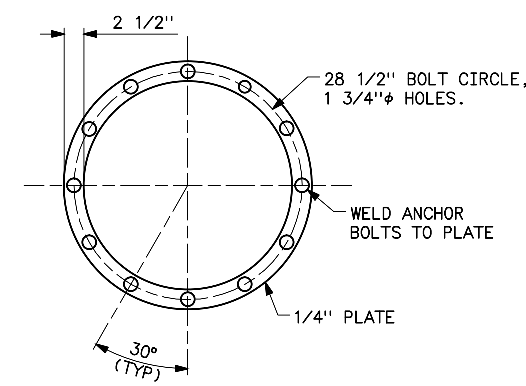

SECTION B-B
ANCHOR BOLT TEMPLATE
2 REQUIRED

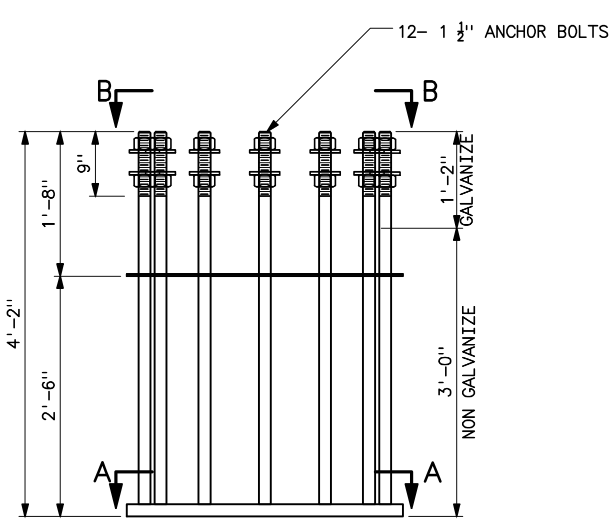

ANCHOR BOLT WELDMENT
WEIGHT = 435 LB

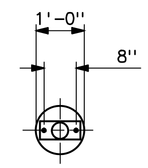

PLAN

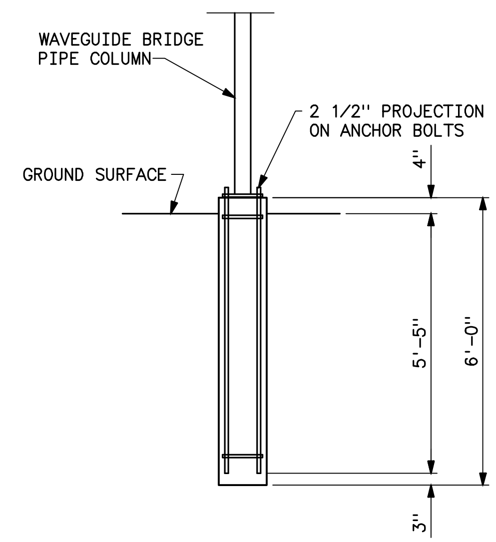

ELEVATION
WAVEGUIDE BRIDGE SUPPORT FOUNDATION

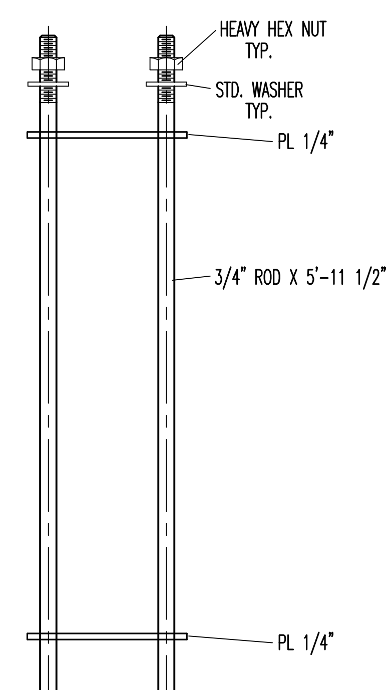

ELEVATION
COAXIAL CABLE SUPPORT ANCHOR BOLTS
(NOTE 6)
WEIGHT = 22 LB

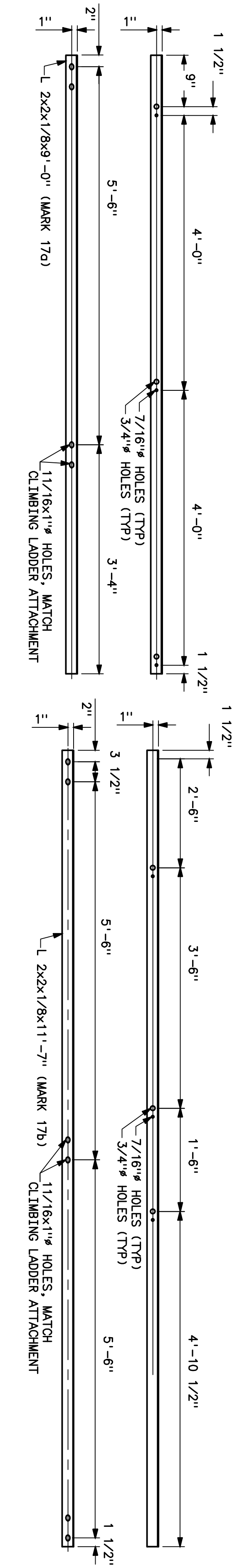

WAVEGUIDE LADDER
(2203)

NOTES

1. CONCRETE: F'c=4000 PSI.
2. NO WELDING SHALL BE PERFORMED UNLESS SHOWN.
3. REINFORCEMENT: Fy=60,000 PSI. MINIMUM 3" COVER ON ALL REINFORCEMENT. TIES SHALL BE #4 BARS.
4. CROWN TOP OF AUGER MINIMUM 1/2" FOR DRAINAGE.
5. THE SOIL DESIGNED FOR SAND N=10, PHI=30 DEGREES, WATER AT 6 FEET, FROST DEPTH OF 5 FEET; CLAY N=8, COHESIION=1.0KSF. THE SOIL WEIGHT USED WAS 110 FOR SAND AND 115 FOR CLAY, POUNDS PER FOOT SQUARE, AND 2 FEET ON NON ACTING SOIL FOR BOTH.
6. WAVEGUIDE BRIDGE SUPPORT ANCHOR BOLTS WILL BE GOVERNMENT FURNISHED.
7. ONE ANCHOR BOLT TEMPLATE IS TO HOLD ANCHOR BOLTS AND THE SECOND ONE IS TO SET THEM IN THE FOUNDATION.
8. ANCHOR BOLTS ARE ASTM F-1554 GRADE 55 AND ALSO MEET S1 FOR WELDABILITY. NUTS SHALL MEET A563, GRADE 55 AND WASHERS SHALL MEET F436.

REFERENCE DRAWINGS

OUTLINE ____ 43-30MW 2203
AUGER & PAD TYPE FOUNDATIONS ____ 43-30MW 2205

A	9-26-16 A7-CTG	CHANGED ANCHOR BOLTS TO ASTM A-1554

UNITED STATES DEPARTMENT OF ENERGY
WESTERN AREA POWER ADMINISTRATION
CORPORATE SERVICES OFFICE - LAKEWOOD, COLORADO

STANDARD MICROWAVE TOWER

MONOPOLE FOUNDATION
DRILLED AUGER TYPE

DESIGNED CHARLIE GARCIA APPROVED DOUG HANSON CIVIL ENGINEERING MANAGER

OCTOBER 18, 2011 | 43-30MW | 2204

Plotted By:Seela Sep 29, 2016- 9:05am
IMAGES:
S:\projects\Misc\StandardDrawings\Drawings\DesignDrawings\xDwgsReadyForFinal\Scripts\43_30_m_w_2204a.dwg Last Saved By: Seela, Holly (CONTR) on 9/29/2016 9:05 AM

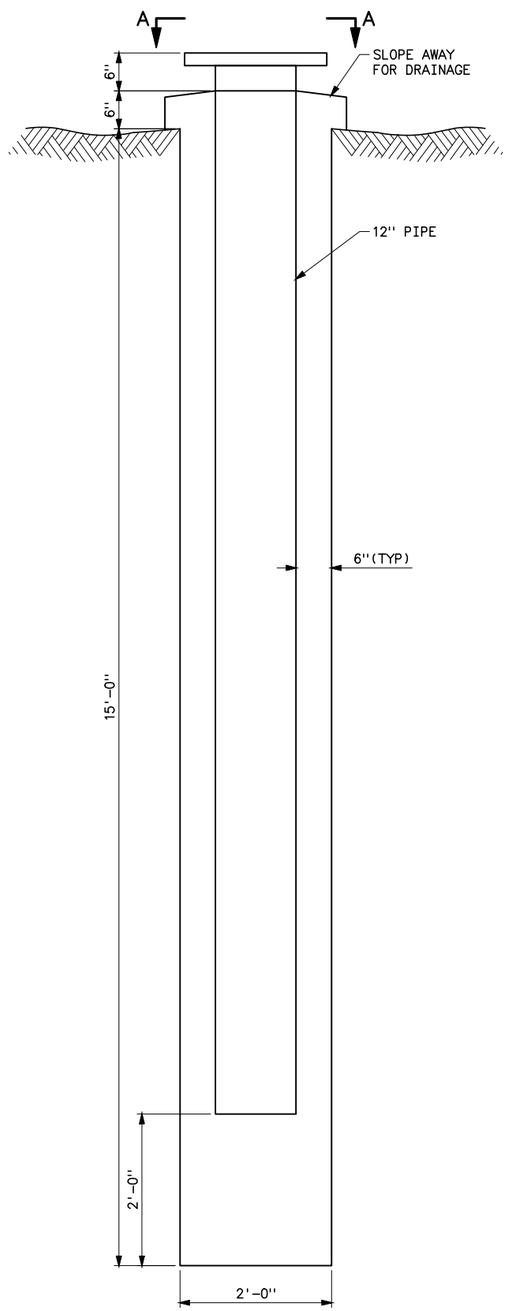

MONOPOLE FOUNDATION
AUGER TYPE

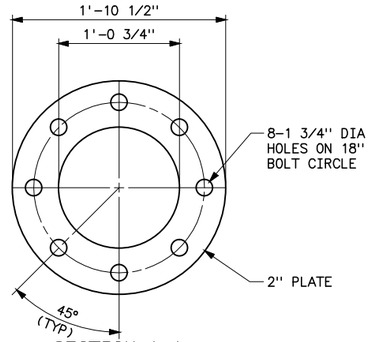

SECTION A-A
BASEPLATE

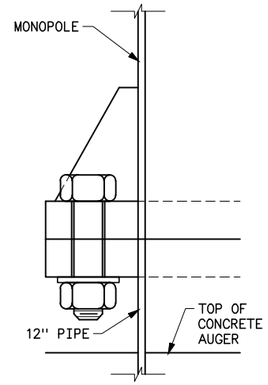

BOLTED
AUGER TYPE

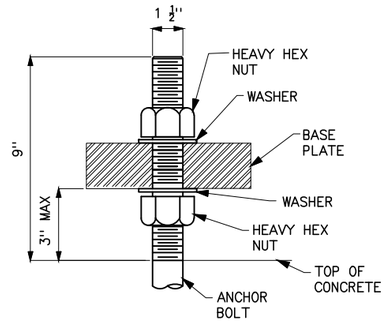

ANCHOR BOLTS
PAD TYPE (TYP)

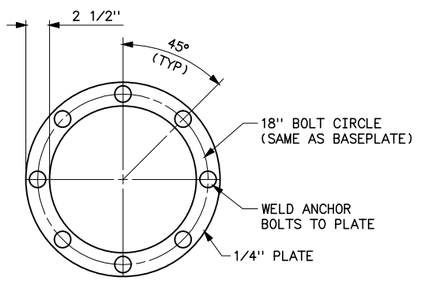

SECTION B-B
ANCHOR BOLT TEMPLATE
2 REQUIRED

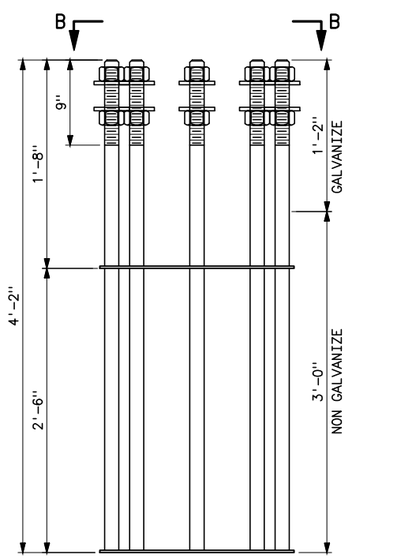

ANCHOR BOLT WELDMENT

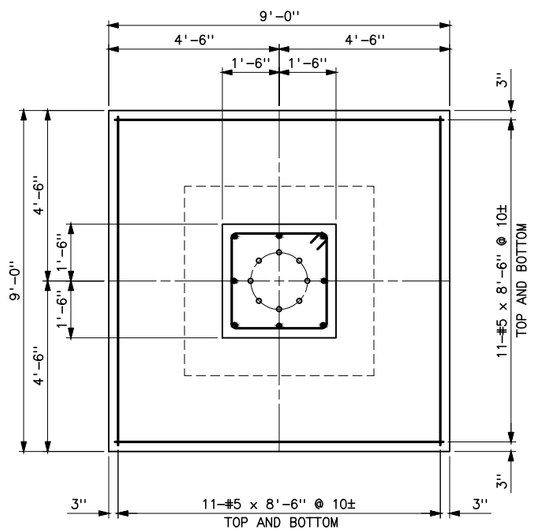

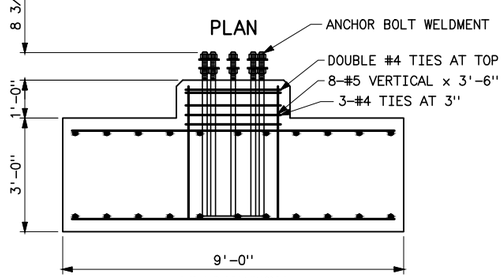

ELEVATION

MONOPOLE FOUNDATION
PAD TYPE

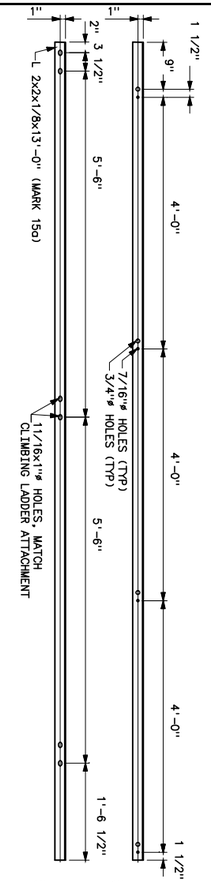

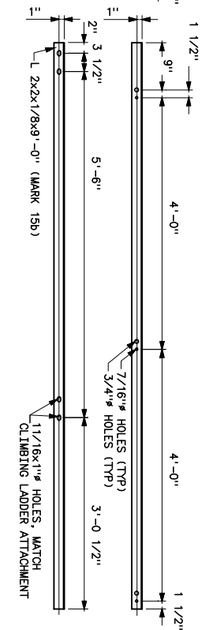

WAVEGUIDE LADDER
(2200)
36.4 LBS

NO.	AUGER TYPE PARTS	WT
1	12"x0.5" WALL BY 14'-0" PIPE	915.9
1	2" SPLICE PLATE, 1'-10 1/2" DIAMETER	153.1
8	1 1/2" DIA x 6 1/4" - A325 BOLTS	
8	NUTS FOR 1 1/2" DIA A325 BOLTS	22
8	WASHERS FOR 1 1/2" DIA A325 BOLTS	
8	PALNUTS FOR 1 1/2" DIA BOLTS	
TOTAL WEIGHT		1091.0

NO.	PAD TYPE PARTS	WT
1	8-1 1/2"x4'-4" ANCHOR BOLT WELDMENT	236.6
16	NUTS AND WASHERS FOR 1 1/2" DIA ANCHOR BOLTS	24.0
16	WASHERS FOR 1 1/2" DIA BOLTS	
TOTAL WEIGHT		260.6

NOTES

1. USE f'c = 4000 PSI CONCRETE, ASTM C150 OR EQUAL, WITH REQUIRED ADMIXTURES OF AIR ENTRAINMENT AND/OR WATER REDUCING AGENTS AS NEEDED.
2. WET HOLE IF REQUIRED TO PREVENT DRYING OF CONCRETE.
3. COVER OVER CONCRETE WITH PLASTIC FOR THE FIRST 24 HOURS.
4. SURFACE CONCRETE CAN BE FORMED ROUND OR SQUARE AS PREFERRED.
5. MINIMUM COVER ON CONCRETE IS 3 INCHES UNLESS SHOWN.
6. ALL REBAR Fy = 60,000 PSI.
7. ALL BOLTS AND NUTS SHALL BE GALVANIZED. ENTIRE 12" PIPE AND BASEPLATE SHALL BE GALVANIZED.
8. ANCHOR BOLTS F1554 GR55 1 1/2" DIAMETER BY 4'-4" LONG, 9" THREAD WITH 9" PROJECTION. PROVIDE TWO NUTS AND WASHERS FOR EACH ANCHOR BOLT.

REFERENCE DRAWING

OUTLINE _____ 43-40MW 2200
FOUNDATION DRILLED AUGER TYPE _____ 43-40MW 2202

A	9-19-16 A7-CTG	MODIFIED ANCHOR BOLT WELDMENT, MATERIAL OF ANCHOR BOLTS & ADDED WAVEGUIDE LADDER.

UNITED STATES DEPARTMENT OF ENERGY
WESTERN AREA POWER ADMINISTRATION
CORPORATE SERVICES OFFICE - LAKEWOOD, COLORADO

STANDARD MICROWAVE TOWER

MONOPOLE FOUNDATIONS

AUGER AND PAD TYPE

DESIGNED C. GARCIA APPROVED D. HANSON
CIVIL ENGINEERING MANAGER

CAE | DECEMBER 1, 2005 | 43-40MW | 2201

Dec 01, 2005- 1:27pm Plotted By:ggarcia IMAGES:
S:\projects\Misc\Standard\Drawings\Design\Drawings\DwgsReadyForFinal\Scripts\43_40_m_w_2201a.dwg Last Saved By: Seela on Sep 27, 2016- 2:12pm

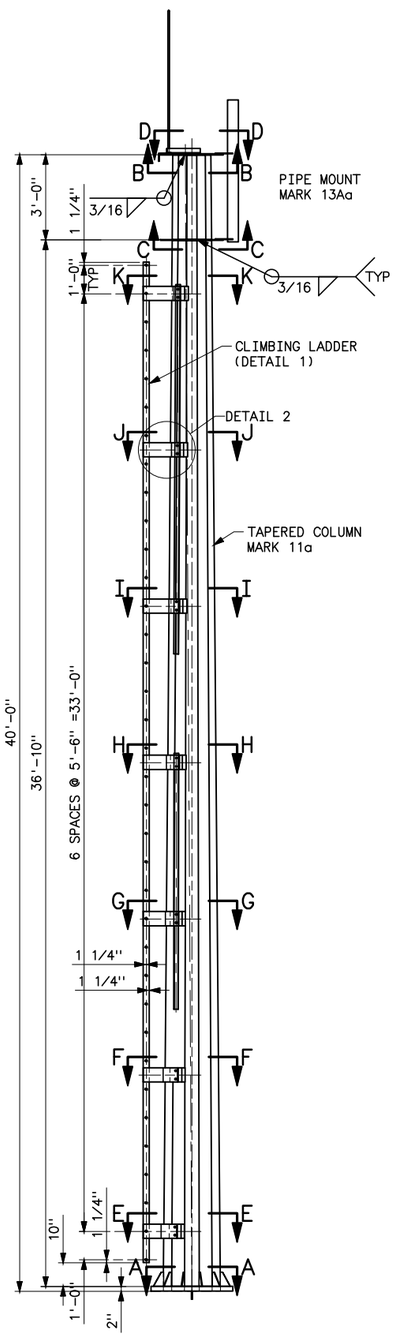

40 FOOT MONOPOLE

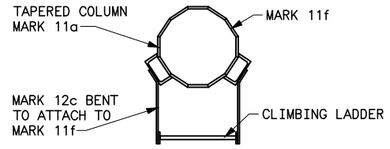

SECTION K-K
CLIMBING LADDER ATTACHMENT
(SIXTH RUNG)

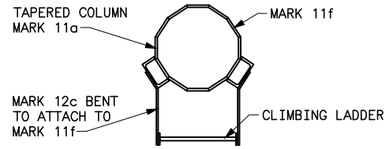

SECTION J-J
CLIMBING LADDER ATTACHMENT
(FIFTH RUNG)

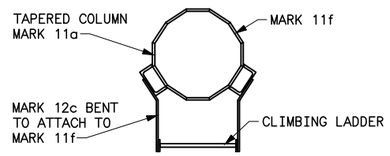

SECTION I-I
CLIMBING LADDER ATTACHMENT
(FOURTH RUNG)

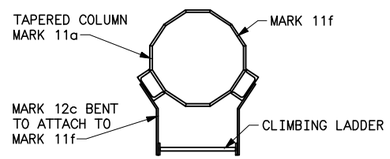

SECTION H-H
CLIMBING LADDER ATTACHMENT
(THIRD RUNG)

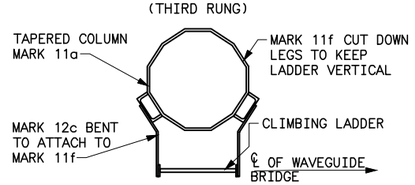

SECTION G-G
CLIMBING LADDER ATTACHMENT
(SECOND RUNG)

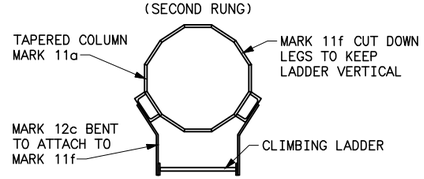

SECTION F-F
CLIMBING LADDER ATTACHMENT
(FIRST RUNG)

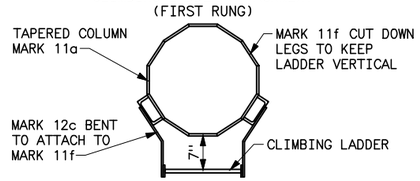

SECTION E-E
CLIMBING LADDER ATTACHMENT
(BOTTOM RUNG)

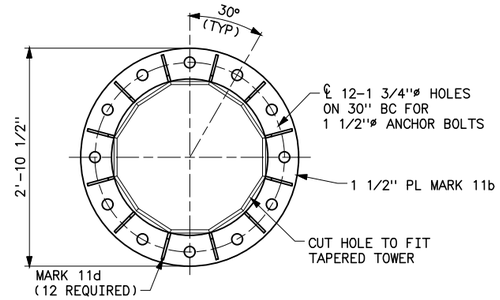

SECTION A-A
BASEPLATE

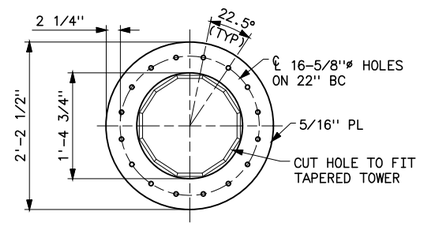

SECTION B-B
UPPER PLATE (NOTE 4)
MARK 11c

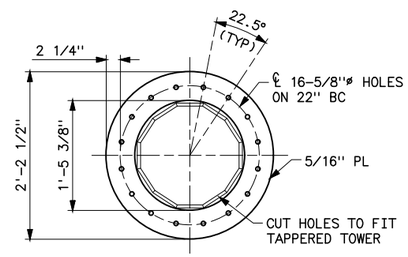

SECTION C-C
LOWER PLATE (NOTE 4)
MARK 11g

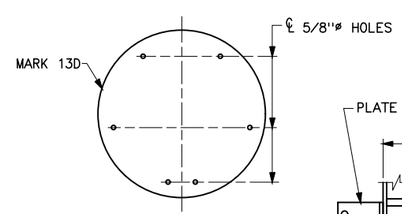

MARK 13D
(COVER PLATE)

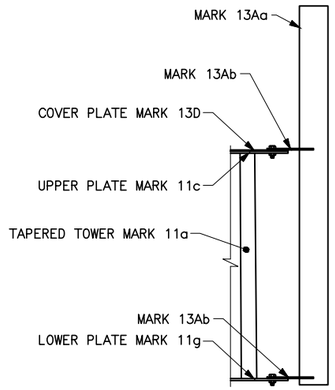

PIPE MOUNT
ATTACHMENT

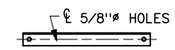

DETAIL 3
MARK 13C

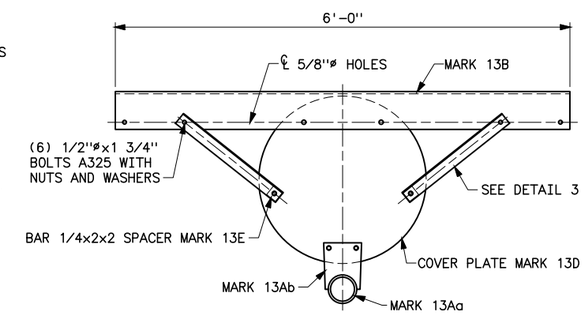

SECTION D-D
COVER PLATE, STABILIZER,
AND PIPE MOUNT

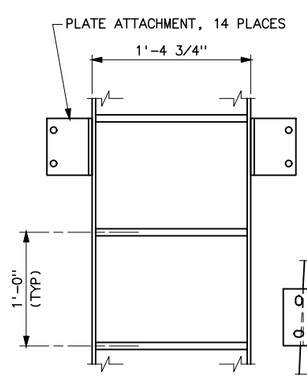

DETAIL 1
(NOTE 3)

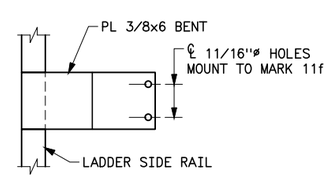

DETAIL 2
MARK 12c

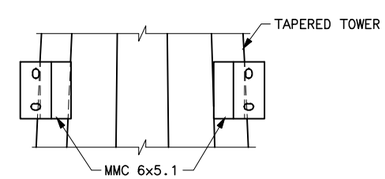

MARK 11f

NO.	PART	LENGTH	MK.	WT.
1	TAPERED TOWER - 1'-6" TOP, 2'-0" BOTTOM, AND 0.1875 WALL THICKNESS	40'-0"	11a	1698.2
1	PL 1 1/2x34 1/2	2'-10 1/2"	11b	506.7
1	PL 5/16x26 1/2 (16 3/4"ø HOLE)	2'-2 1/2"	11c	62.5
6	PL 3/8x5 3/8 (MAKES 12)	0'-6"	11d	24.6
14	MC 6x15.1 (CUT DOWN LEGS AS REQUIRED TO KEEP LADDER VERTICAL)	0'-6"	11f	105.7
1	PL 5/16x26 1/2 (17 3/8"ø HOLE)	2'-2 1/2"	11g	62.5
2	CLIMBING LADDER, BAR 3/8x2 1/2	35'-2 1/2"	12a	224.6
36	LADDER STEPS, ROD 3/4"ø	1'-4 5/8"	12b	75.0
14	LADDER ATTACHMENT PL 3/8x6 BENT	1'-4"	12c	142.6
1	4"x0.337 WALL, PIPE	5'-0"	13Aa	75.0
2	PL 1/4x5 1/2	0'-7 3/8"	13Ab	5.8
1	L 6x3 1/2x5/16 - STABILIZER	6'-0"	13B	58.8
2	L 2x2x1/8 - STABILIZER	1'-8 3/16"	13C	5.6
1	TOP PLATE 10 GAx26 1/2	2'-2 1/2"	13D	27.3
2	BARS 1/4x2 SPACER	0'-2"	13E	0.6
12	5/8"ø BOLTS, NUTS AND WASHERS	0'- 2"		4.5
18	5/8"ø BOLTS, NUTS, AND WASHERS	0'- 2"		9.0
30	5/8"ø PALNUTS			0.4
6	1/2"ø BOLTS, NUTS, AND WASHERS	0'-1 3/4"		1.3
8	1/2"ø BOLTS, NUTS, AND WASHERS	0'-2 1/2"		2.0
14	1/2"ø PALNUTS			0.2
	TOTAL WEIGHT			3090.7

NOTES

1. GALVANIZE MATERIAL AFTER FABRICATION.
2. WELDS ARE TYPICAL FOR SIMILAR CONDITIONS.
3. ATTACH LADDER TO POLE IN 7 PLACES AS SHOWN IN SECTION F-F THRU SECTION K-K. OPTIONAL LADDER ATTACHMENT CAN BE MADE, HOWEVER NEED CENTER OF RUNGS CLEAR FOR CLIMBING DEVICE. IF LADDER MADE IN TWO PIECES, THEN NEED TO BE SPLICED TOGETHER AND BOLTED. THE LADDER IS REMOVABLE, HOWEVER WHEN PLACED ON POLE SHOULD BE DIFFICULT TO REMOVE.
4. UPPER AND LOWER PLATES NEED TO BE LINED UP ON HOLES EXACTLY FOR PIPE MOUNT.
5. PIPE FOR POLE AND PIPE MOUNT IS A500, GRADE B.
6. OPTIONAL PIPE MOUNT CAN BE PLACED AS SHOWN OR MOVED UP ONE MORE ATTACHMENT POINT.
7. MONOPOLE CAN MOUNT 1'-8" SOLID WITH RADOME AT TOP. OTHER OPTIONS NEED TO BE CHECKED.

REFERENCE DRAWINGS

MONOPOLE FOUNDATION DRILLED AUGER ____ 43-40MW 2204
5 FOOT WAVEGUIDE BRIDGE _ _ _ _ _ _ _ _ 43-40MW 2205

A	11-6-16 A7-CTG	CORRECTED WEIGHTS, BOLTS AND ADDED WAVEGUIDE LADDER.

UNITED STATES DEPARTMENT OF ENERGY
WESTERN AREA POWER ADMINISTRATION
CORPORATE SERVICES OFFICE - LAKEWOOD, COLORADO

STANDARD MICROWAVE TOWER

40 FOOT MONOPOLE
OUTLINE

DESIGNED CHARLIE GARCIA APPROVED DOUG HANSON CIVIL ENGINEERING MANAGER

C/A/E | SEPTEMBER 29, 2016 | 43-40MW | 2203

Plotted By:denton Nov 01, 2016- 10:24am
IMAGES:
S:\projects\Misc\StandardDrawings\Final\43_40_mw_2203a.dwg Last Saved By: Denton, Debra on 11/1/2016 10:24 AM

DRILLED VERTICAL AUGER TYPE

SOIL	N	H (FT.-IN.)	D1 (FT.-IN.)	ANCHOR COMPRESSION (KIPS)	SHEAR (KIPS)	MOMENT (FT/KIPS)	CUBIC YARD	LONGITUDINAL REINFORCEMENT	TIES
SAND OR CLAY	NOTE 5	14'-0"	3'-6"	-5.0	5.5	120.0	5.0	12-#6x13'-6"	21-#4x11'-0"

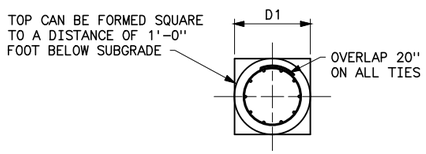

PLAN

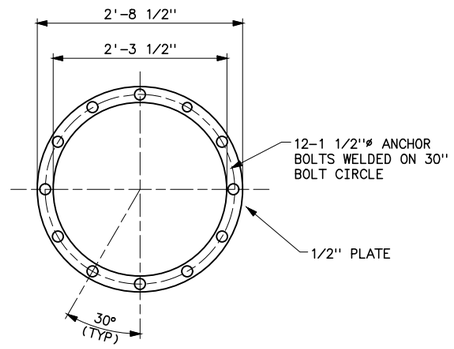

SECTION A-A
BASEPLATE

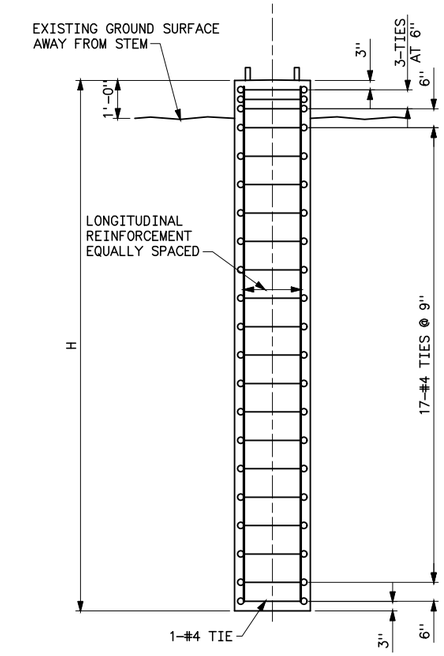

ELEVATION
DRILLED AUGER TYPE

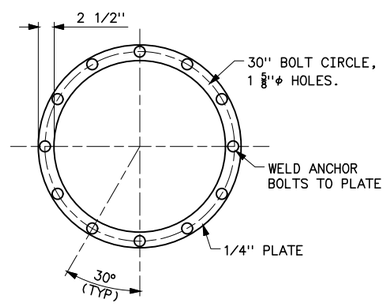

SECTION B-B
ANCHOR BOLT TEMPLATE
2 REQUIRED

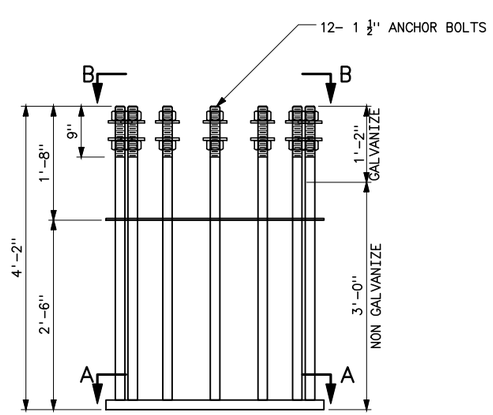

ANCHOR BOLT WELDMENT
WEIGHT = 435 LB

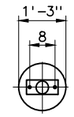

PLAN

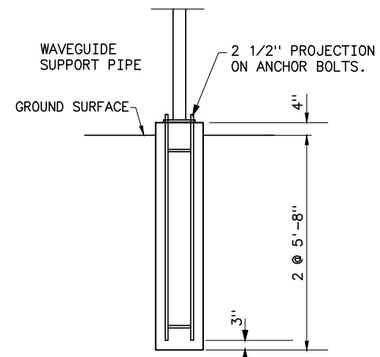

ELEVATION
WAVEGUIDE SUPPORT
FOUNDATION
CU YDS=0.26
(2 REQUIRED)

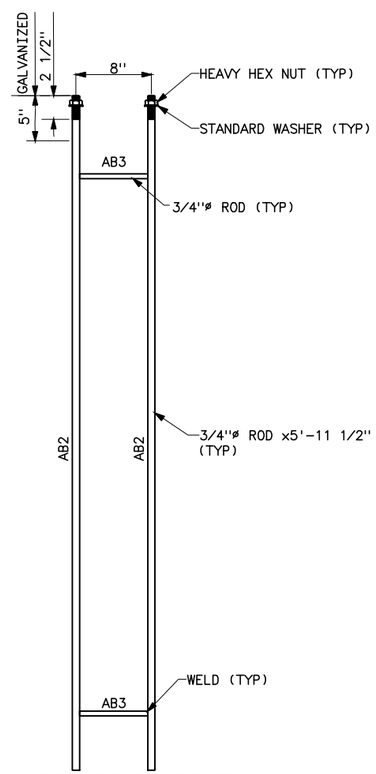

WAVEGUIDE SUPPORT
ANCHOR BOLTS
MARK AB2 AND AB3
WT=21 LBS
(2 REQUIRED)

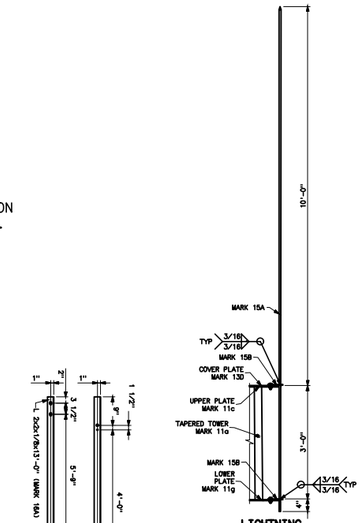

LIGHTNING
ROD
WELDMENT

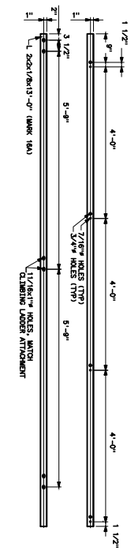

WAVEGUIDE LADDER
(2200)
21.5 LBS

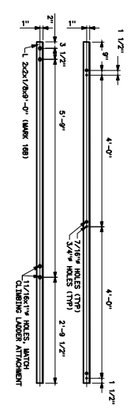

WAVEGUIDE LADDER
(2200)
14.9 LBS

NO.	PART	LENGTH	MK.	WT,
	ANCHOR BOLT WELDMENT			
12	1 1/2"ø ANCHOR BOLTS	4'-2"	AB-1	301.0
2	PL 1/4x32 1/2 (27 1/2"ø HOLES)	2'-8 1/2"	B01	49.6
1	PL 1/2x32 1/2 (27 1/2"ø HOLES)	2'-8 1/2"	C01	49.6
24	1 1/2"ø NUTS	HEAVY HEX		32.2
24	1 1/2"ø WASHERS			2.6
	WAVEGUIDE SUPPORT ANCHOR BOLTS			
2	3/4"ø A36 STEEL ROD	5'-11 1/2"	AB2	18.6
2	3/4"ø A36 STEEL ROD	0'-7 1/4"	AB3	2.0
2	3/4"ø HEAVY HEX HUTS AND WASHERS			0.4
	LIGHTNING ROD WELDMENT			
1	5/8"ø A36 GALVANIZED STEEL ROD	5'-11 1/2"	15A	14.0
2	PL 1/4"x2 1/2"	4 3/4"	15B	1.8
3	1/2"ø BOLTS, NUTS AND WASHERS	0'-1 3/4"		0.5
	WAVEGUIDE LADDER			
1	L 2X2X1/8"	13'-0"	16A	58.7
1	L 2X2X1/8"	9'-0"	16B	5.4

NOTES

1. CONCRETE: F'c=4000 PSI.
2. NO WELDING SHALL BE PERFORMED UNLESS SHOWN.
3. REINFORCEMENT: Fy=60,000 PSI. MINIMUM 3" COVER ON ALL REINFORCEMENT. TIES SHALL BE #4 BARS.
4. CROWN TOP OF AUGER MINIMUM 1/2" FOR DRAINAGE.
5. THE SOIL DESIGNED FOR SAND N=10, PHI=30 DEGREES, WATER AT 6 FEET, FROST DEPTH OF 5 FEET; CLAY N=8, COHESIION=1.0KSF. THE SOIL WEIGHT USED WAS 110 FOR SAND AND 115 FOR CLAY, POUNDS PER FOOT SQUARE, AND 2 FEET ON NON ACTING SOIL FOR BOTH.
6. WAVEGUIDE BRIDGE SUPPORT ANCHOR BOLTS WILL BE GOVERNMENT FURNISHED.
7. ONE ANCHOR BOLT TEMPLATE IS TO HOLD ANCHOR BOLTS AND THE SECOND ONE IS TO SET THEM IN THE FOUNDATION.
8. ANCHOR BOLTS ARE ASTM F1554 GRADE 55 AND ALSO MEET S1 FOR WELDABILITY. NUTS SHALL MEED A563 GRADE 55 AND WASHERS SHALL MEET F436.

REFERENCE DRAWINGS

40 FOOT MONOPOLE OUTLINE_____43 40MW 2203

A	11-23-16 A7-CTG	MODIFIED ANCHOR BOLT THREADS AND WEIGHTS, BRIDGE SUPPORTS AND SUPPORT BOLTS.

UNITED STATES DEPARTMENT OF ENERGY
WESTERN AREA POWER ADMINISTRATION
CORPORATE SERVICES OFFICE - LAKEWOOD, COLORADO

STANDARD MICROWAVE TOWER

MONOPOLE FOUNDATION
DRILLED AUGER TYPE

DESIGNED CHARLIE GARCIA APPROVED DOUG HANSON
CIVIL ENGINEERING MANAGER

A F	SEPTEMBER 29, 2016	43-40MW	2204

Plotted By:denton Nov 01, 2016- 10:25am
IMAGES:
S:\projects\Wisc\StandardDrawings\Final\43_40_m_w_2204a.dwg Last Saved By: Denton, Debra on 11/1/2016 10:25 AM

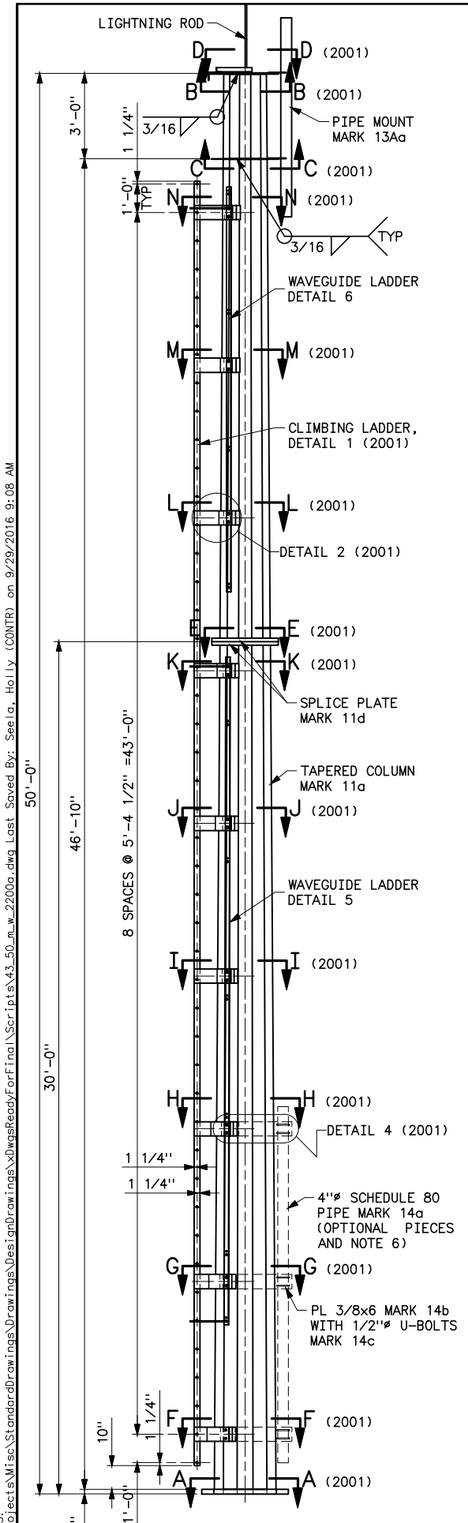

50 FOOT MONOPOLE

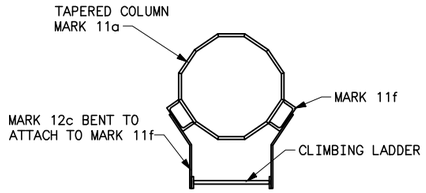

SECTION J–J
CLIMBING LADDER ATTACHMENT
(FOURTH RUNG)

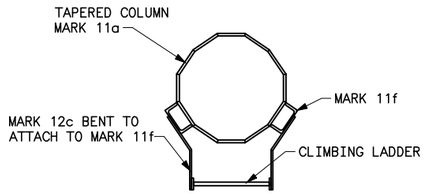

SECTION I–I
CLIMBING LADDER ATTACHMENT
(THIRD RUNG)

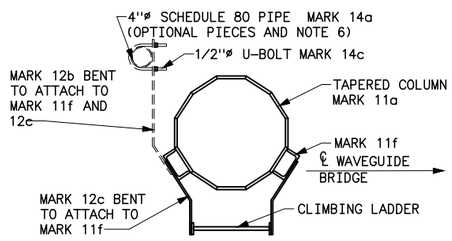

SECTION H–H
CLIMBING LADDER ATTACHMENT
(SECOND RUNG)

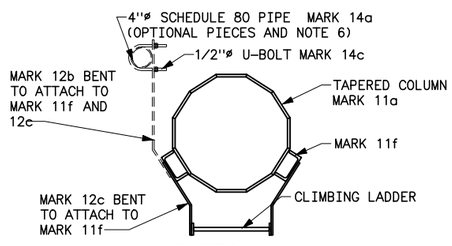

SECTION G–G
CLIMBING LADDER ATTACHMENT
(FIRST RUNG)

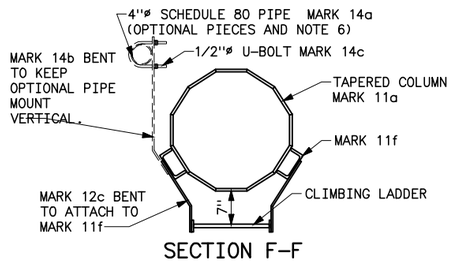

SECTION F–F
CLIMBING LADDER ATTACHMENT
(BOTTOM RUNG)

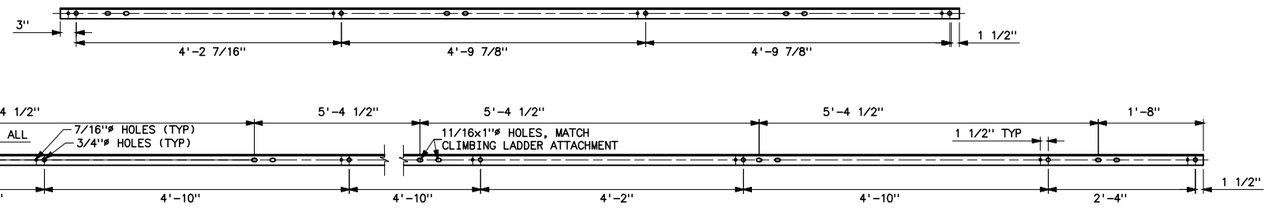

DETAIL 5

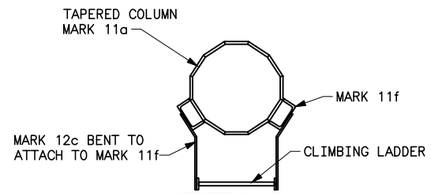

SECTION N–N
CLIMBING LADDER ATTACHMENT
(EIGHTH RUNG)

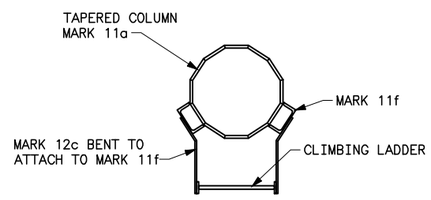

SECTION M–M
CLIMBING LADDER ATTACHMENT
(SEVENTH RUNG)

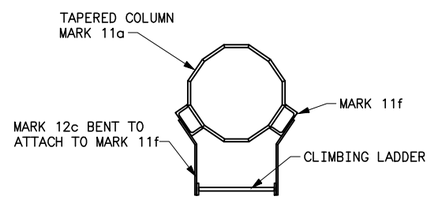

SECTION L–L
CLIMBING LADDER ATTACHMENT
(SIXTH RUNG)

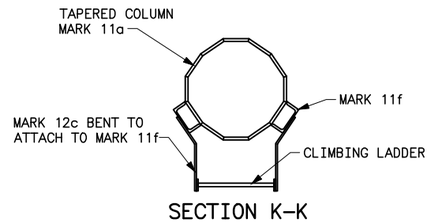

SECTION K–K
CLIMBING LADDER ATTACHMENT
(FIFTH RUNG)

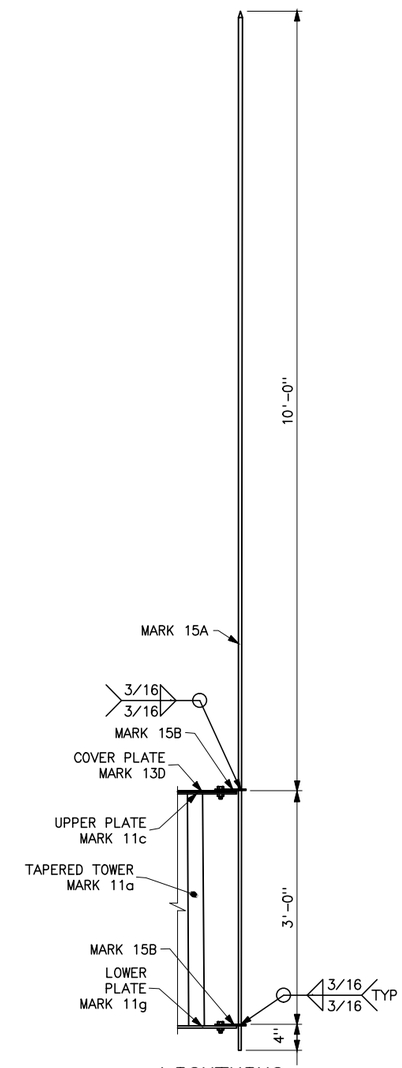

LIGHTNING
ROD
WELDMENT

NOTES

1. GALVANIZE MATERIAL AFTER FABRICATION.
2. WELDS ARE TYPICAL FOR SIMILAR CONDITIONS.
3. ATTACH LADDER TO TAPERED COLUMN IN 9 PLACES AS SHOWN IN SECTION E–E THRU SECTION N–N. IF LADDER MADE IN TWO PIECES, THEN NEED TO BE SPLICED TOGETHER AND BOLTED. THE LADDER IS REMOVABLE, HOWEVER WHEN PLACED ON POLE SHOULD BE DIFFICULT TO REMOVE.
4. UPPER AND LOWER PLATES NEED TO BE LINED UP ON HOLES EXACTLY FOR PIPE MOUNT.
5. TAPERED COLUMN FOR POLE AND PIPE MOUNT IS A500, GRADE B.
6. OPTIONAL PIPE MOUNT CAN BE PLACED AS SHOWN OR MOVED UP ONE MORE ATTACHMENT POINT.
7. MONOPOLE CAN MOUNT 1–8' SOLID WITH RADOME AT TOP.CAN ALSO PLACE 1–6' SOLID WITH RADOM AT TOP AND 1–6' SOLID WITH RADOME AT BOTTOM ON OPTIONAL PIPE MOUNT. OTHER OPTIONS NEED TO BE CHECKED.
8. ALL BOLTS, NUTS, WASHERS ARE ASTM A325.

REFERENCE DRAWINGS

50 FT MONOPOLE SECTIONS AND DETAILS_____43–50MW 2201
50 FT MONOPOLE DRILLED AUGER TYPE FOUNDATION____43–50MW 2202
50 FT WAVEGUIDE BRIDGE_____43 50MW 2203

A	11-6-15 A7-CTG	ADDED WAVEGUIDE LADDER AND LIGHTNING ROD

UNITED STATES DEPARTMENT OF ENERGY
WESTERN AREA POWER ADMINISTRATION
CORPORATE SERVICES OFFICE – LAKEWOOD, COLORADO

STANDARD MICROWAVE TOWER
50 FOOT MONOPOLE
ELEVATION AND SECTIONS

DESIGNED CHARLES GARCIA APPROVED DOUG HANSON CIVIL ENGINEERING MANAGER

CAE	APRIL 28, 2008	43–50MW	2200

Plotted By: Seela Sep 29, 2016- 9:08am
IMAGES:
S:\Projects\Wisc\StandardDrawings\Drawings\DesignDrawings\xDwgsReadyForFinal\Scripts\43_50_m_w_2200a.dwg Last Saved By: Seela, Holly (CONTR) on 9/29/2016 9:08 AM

DRILLED VERTICAL AUGER TYPE

SOIL	N	H (FT.-IN.)	D1 (FT.-IN.)	ANCHOR					
				COMPRESSION (KIPS)	SHEAR (KIPS)	MOMENT (FT/KIPS)	CUBIC YARD	LONGITUDINAL REINFORCEMENT	TIES
SAND OR CLAY	NOTE 5	14'-0"	4'-0"	-5.0	7.0	160.0	6.6	12-#8x13'-6"	21-#4x12'-6"

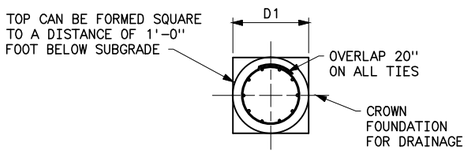

PLAN

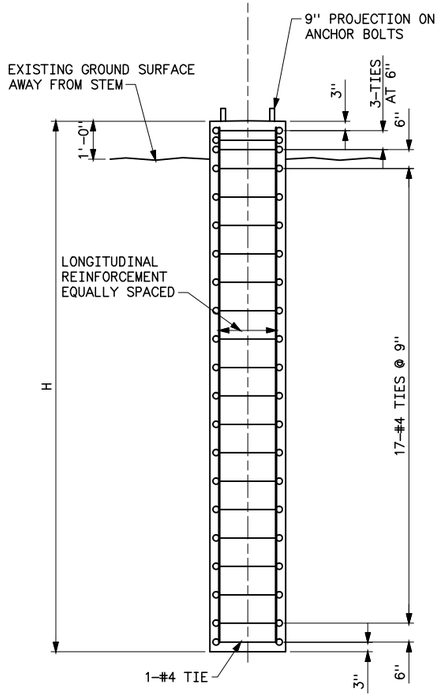

ELEVATION
DRILLED AUGER TYPE

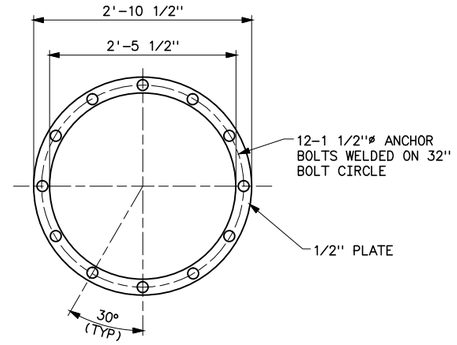

SECTION A-A
BASEPLATE

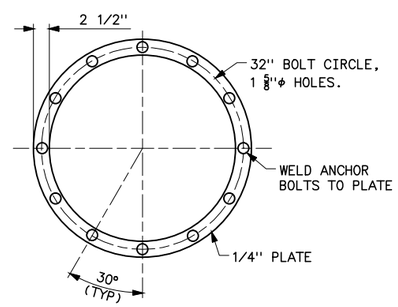

SECTION B-B
ANCHOR BOLT TEMPLATE
2 REQUIRED

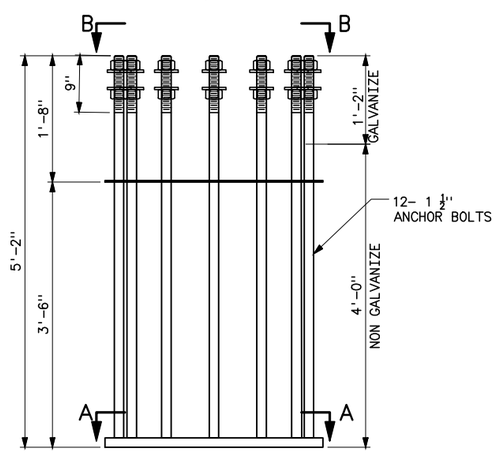

ANCHOR BOLT WELDMENT
WEIGHT = 502 LB
(1 REQUIRED)

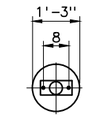

PLAN

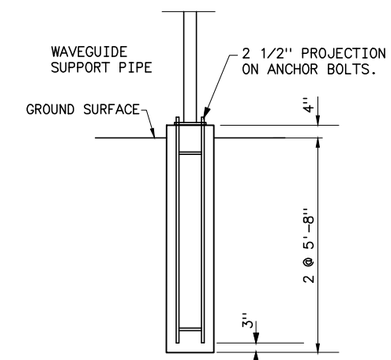

ELEVATION
WAVEGUIDE SUPPORT FOUNDATION
CU YDS=0.26
(2 REQUIRED)

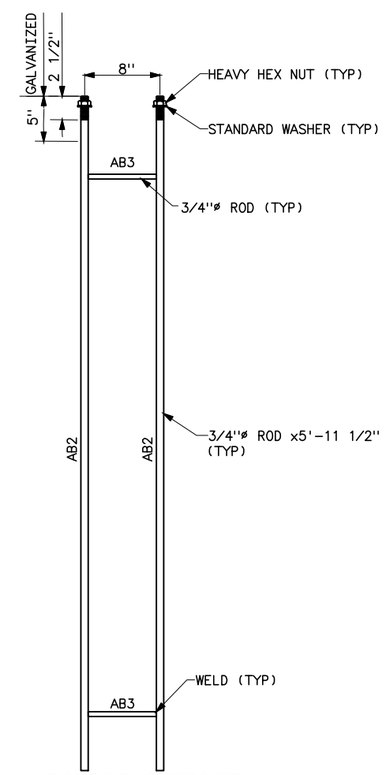

WAVEGUIDE SUPPORT
ANCHOR BOLTS
MARK AB2 AND AB3
WT=21 LBS
(2 REQUIRED)

NOTES

1. CONCRETE: F'c=4000 PSI.
2. NO WELDING SHALL BE PERFORMED UNLESS SHOWN.
3. REINFORCEMENT: Fy=60,000 PSI. MINIMUM 3" COVER ON ALL REINFORCEMENT. TIES SHALL BE #4 BARS.
4. CROWN TOP OF AUGER MINIMUM 1/2" FOR DRAINAGE.
5. THE SOIL DESIGNED FOR SAND N=10, PHI=30 DEGREES, WATER AT 6 FEET, FROST DEPTH OF 5 FEET; CLAY N=8, COHESIION=1.0KSF. THE SOIL WEIGHT USED WAS 110 FOR SAND AND 115 FOR CLAY, POUNDS PER FOOT SQUARE, AND 2 FEET ON NON ACTING SOIL FOR BOTH.
6. WAVEGUIDE BRIDGE SUPPORT ANCHOR BOLTS WILL BE GOVERNMENT FURNISHED.
7. ONE ANCHOR BOLT TEMPLATE IS TO HOLD ANCHOR BOLTS AND THE SECOND ONE IS TO SET THEM IN THE FOUNDATION.
8. ANCHOR BOLTS ARE ASTM A36 STEEL.

REFERENCE DRAWINGS

50 FOOT MONOPOLE ELEVATION AND SECTIONS__43 50MW 2200
50 FOOT MONOPOLE SECTIONS AND DETALIS___43 50MW 2201
50 FOOT MONOPOLE WAVEGUIDE BRIDGE_____43 50MW 2203

B	11-23-15 A7-CTG	REVISED ANCHOR BOLTS, WAVEGUIDE FOUNDATION AND ANCHOR BOLTS.
A	12/2/09 A3-CTG	REVISED ANCHOR BOLT WEIGHT.

UNITED STATES DEPARTMENT OF ENERGY
WESTERN AREA POWER ADMINISTRATION
CORPORATE SERVICES OFFICE - LAKEWOOD, COLORADO

STANDARD MICROWAVE TOWER

50 FOOT MONOPOLE
DRILLED AUGER TYPE FOUNDATION

DESIGNED CHARLES GARCIA APPROVED DOUG HANSON CIVIL ENGINEERING MANAGER

CAD	NOVEMBER 17, 2008	43-50MW	2202

Plotted By:Seela Sep 29, 2016- 9:09am
IWAGES:
S:\Projects\Wisc\StandardDrawings\Drawings\DesignDrawings\xDwgsReadyForFinal\Scripts\43_50_m_w_2202b.dwg Last Saved By: Seela, Holly (CONTR) on 9/29/2016 9:09 AM

DRILLED VERTICAL AUGER TYPE

SOIL	N	H (FT.-IN.)	D1 (FT.-IN.)	ANCHOR					
				COMPRESSION (KIPS)	SHEAR (KIPS)	MOMENT (FT/KIPS)	CUBIC YARD	LONGITUDINAL REINFORCEMENT	TIES
SAND OR CLAY	NOTE 5	17'-0"	4'-0"	-10.0	7.0	330.0	8.0	12-#8x16'-6"	25-#4x12'-6"

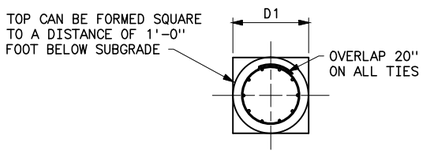

PLAN

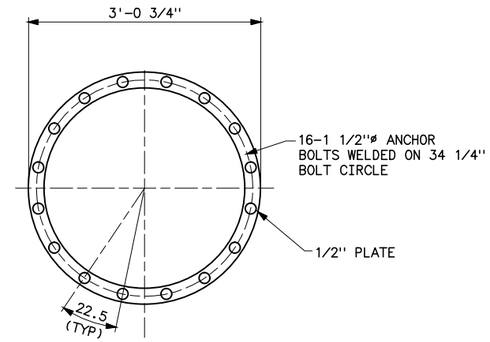

SECTION A-A
BASEPLATE

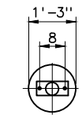

PLAN

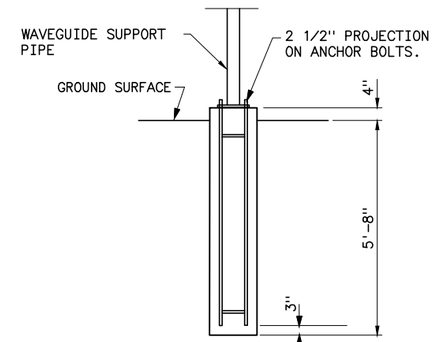

ELEVATION
WAVEGUIDE SUPPORT
FOUNDATION
CU YDS=0.26
(2 REQUIRED)

NOTES

1. CONCRETE: F'c=4000 PSI.
2. NO WELDING SHALL BE PERFORMED UNLESS SHOWN.
3. REINFORCEMENT: Fy=60,000 PSI. MINIMUM 3" COVER ON ALL REINFORCEMENT. TIES SHALL BE #4 BARS.
4. CROWN TOP OF AUGER MINIMUM 1/2" FOR DRAINAGE.
5. THE SOIL DESIGNED FOR SAND N=10, PHI=30 DEGREES, WATER AT 6 FEET, FROST DEPTH OF 5 FEET; CLAY N=8, COHESIION=1.0KSF. THE SOIL WEIGHT USED WAS 110 FOR SAND AND 115 FOR CLAY, POUNDS PER FOOT SQUARE, AND 2 FEET ON NON ACTING SOIL FOR BOTH.
6. WAVEGUIDE BRIDGE SUPPORT ANCHOR BOLTS WILL BE GOVERNMENT FURNISHED.
7. ONE ANCHOR BOLT TEMPLATE IS TO HOLD ANCHOR BOLTS AND THE SECOND ONE IS TO SET THEM IN THE FOUNDATION.
8. ANCHOR BOLTS ARE ASTM A36 STEEL.

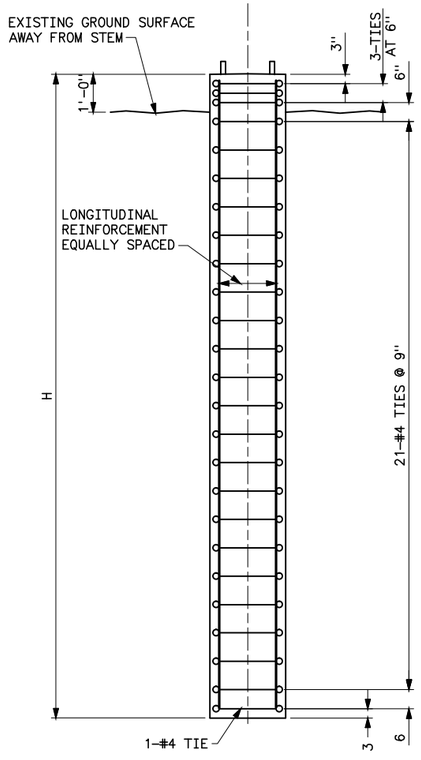

ELEVATION
DRILLED AUGER TYPE

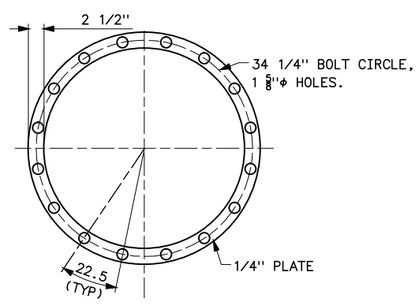

SECTION B-B
ANCHOR BOLT TEMPLATE
2 REQUIRED

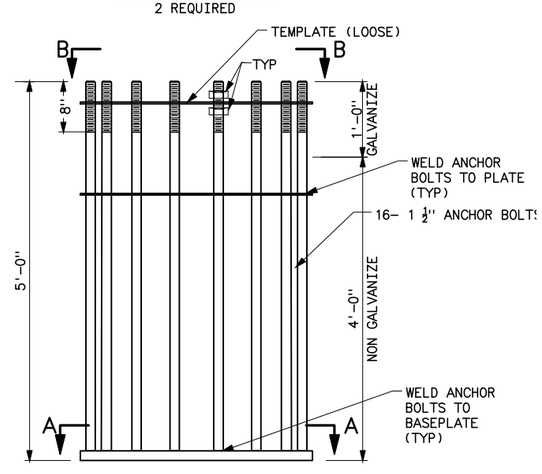

ANCHOR BOLT WELDMENT
WEIGHT = 889 LB

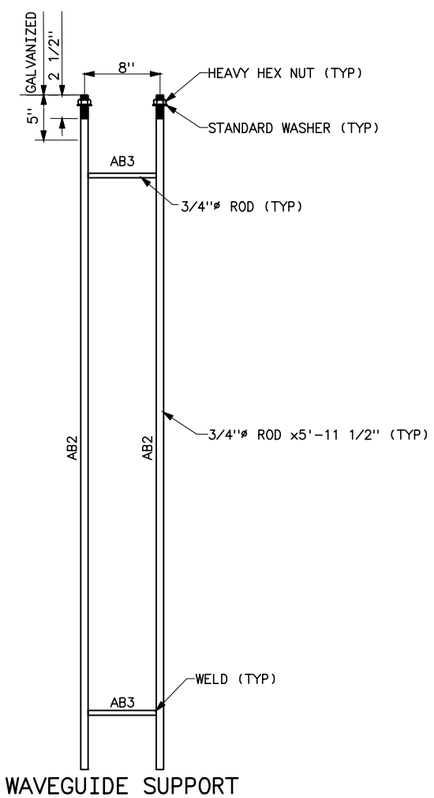

WAVEGUIDE SUPPORT
ANCHOR BOLTS
MARK AB2 AND AB3
WT=21 LBS
(2 REQUIRED)

REFERENCE DRAWINGS

70 FOOT MONOPOLE ELEVATION AND SECTIONS ---- 43 70MW 2200
70 FOOT MONOPOLE SECTIONS AND DETALIS ------ 43 70MW 2201
70 FOOT MONOPOLE WAVEGUIDE BRIDGE -------- 43 70MW 2203

UNITED STATES DEPARTMENT OF ENERGY
WESTERN AREA POWER ADMINISTRATION
CORPORATE SERVICES OFFICE - LAKEWOOD, COLORADO

STANDARD MICROWAVE

70 FOOT MONOPOLE
DRILLED AUGER TYPE FOUNDATION

DESIGNED CHARLES GARCIA APPROVED DOUG HANSON
CIVIL ENGINEERING MANAGER

C A F	SEPTEMBER 23, 2011	43 70MW	2202

Plotted By:Seela Sep 29, 2016- 9:09am
IWAGES:
S:\projects\Misc\StandardDrawings\DesignDrawings\xDwgsReadyForFinal\Scripts\43_70_m_w_2202.dwg Last Saved By: Seela, Holly (CONTR) on 9/29/2016 9:09 AM

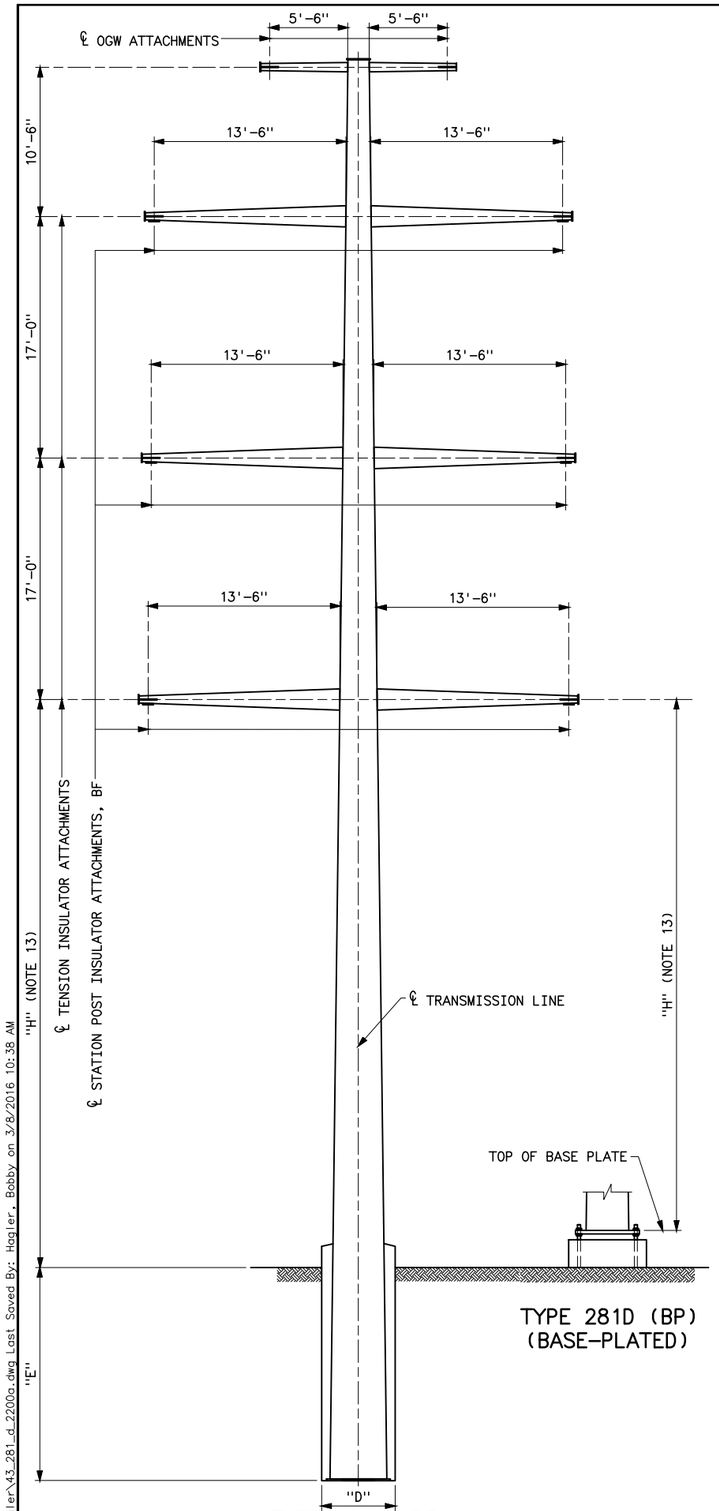

TYPE 281D (DE)
(DIRECT-EMBEDDED)

TYPE 281D (BP)
(BASE-PLATED)

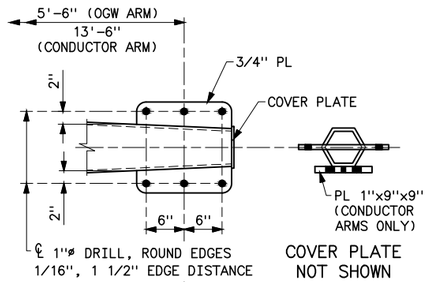

TYPICAL OGW AND TENSION
INSULATOR ATTACHMENTS

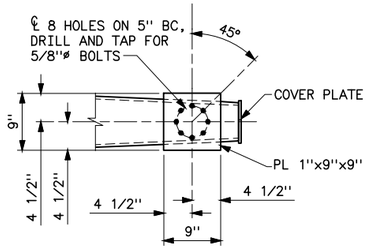

TYPICAL STATION POST
INSULATOR ATTACHMENT
(CONDUCTOR ARMS ONLY)

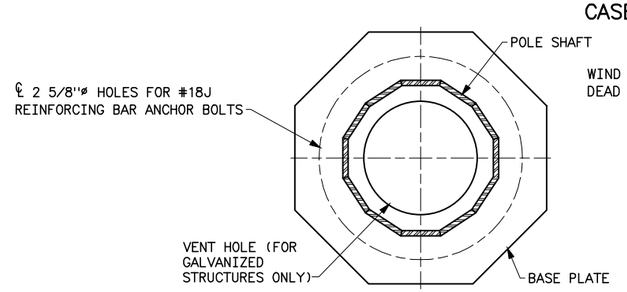

SECTION A-A

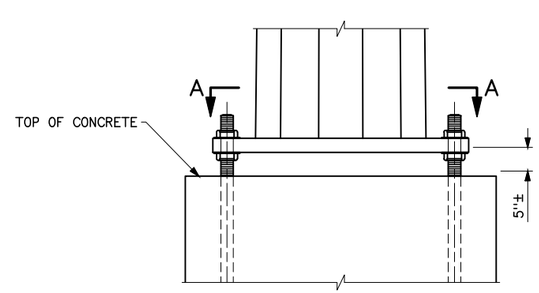

TYPE 281D (BP)
BASE DETAIL

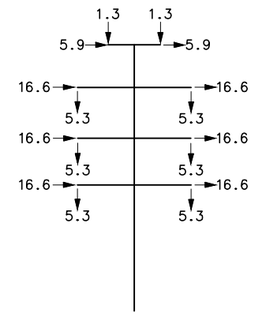

CASE A – NESC
LIGHT INTACT
50° LINE ANGLE
WIND ON STRUCTURE = 22.5 PSF
DEAD LOAD OF STRUCTURE x 1.5

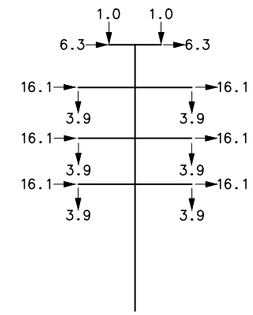

CASE B – HIGH
WIND INTACT
50° LINE ANGLE
WIND ON STRUCTURE = 31 PSF
DEAD LOAD OF STRUCTURE x 1.1

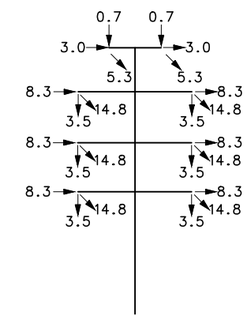

CASE C – NESC LIGHT
DEADEND
50° LINE ANGLE
WIND ON STRUCTURE = 22.5 PSF
DEAD LOAD OF STRUCTURE x 1.5

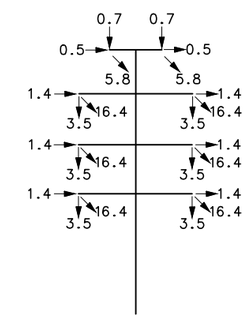

CASE D – NESC LIGHT
DEADEND
0° LINE ANGLE
WIND ON STRUCTURE = 22.5 PSF
DEAD LOAD OF STRUCTURE x 1.5

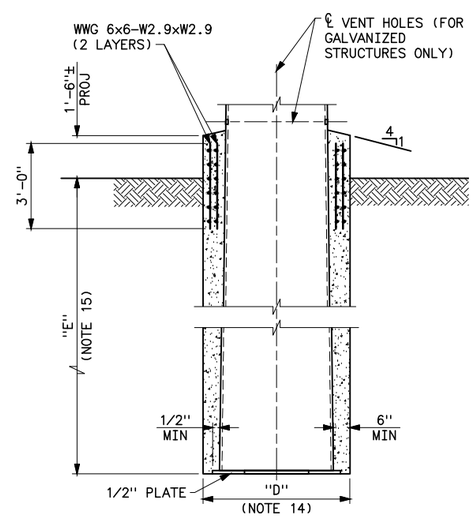

TYPE 281D (DE)
BASE DETAIL

NOTES

1. LOADS ARE ULTIMATE VALUES AND INCLUDE OVERLOAD FACTORS.
2. WIRE LOADS ARE IN KIPS AND ARE TOTAL FOR ALL SPANS.
3. STRUCTURE AND ATTACHMENTS SHALL BE DESIGNED FOR THE SIMULTANEOUS APPLICATION OF DEAD LOAD, WIND ON THE STRUCTURE, AND WIRE LOADS FOR EACH LOADING CASE.
4. STRUCTURE SHALL BE DESIGNED SELF SUPPORTING; GUYS ARE NOT PERMITTED.
5. WIND PRESSURE SHOWN ON LOADING DIAGRAMS ARE BASED ON A SHAPE FACTOR OF 1.0 FOR CIRCULAR SECTIONS. FOR SECTIONS OTHER THAN CIRCULAR, MULTIPLY THE PRESSURES BY THE FOLLOWING SHAPE FACTORS:
   ELLIPTICAL=1.2 (MAJOR AXIS)
   0.9 (MINOR AXIS)
   16-SIDED=1.0
   12-SIDED=1.1
   8-SIDED=1.4
   6-SIDED=1.4
   4-SIDED=2.0
6. DESIGN LOADS ARE BASED ON 1272 KCMIL ACSS 54/19 "PHEASANT" CONDUCTOR AND 1/2ø, 7-STRAND, HIGH-STRENGTH STEEL OVERHEAD GROUND WIRES.
7. SUM OF ADJACENT SPANS_____2150 FT
8. LOW POINT DISTANCE_____1500 FT
9. LINE ANGLE_____0-50°
10. RULING SPAN_____1000 FT
11. NESC LIGHT: 0 RADIAL ICE, 9 PSF WIND AT 30°F.
    TENSIONS: CONDUCTOR_____9900 LB
    OGW_____3500 LB
12. HIGH WIND: 100 MPH 3-SECOND GUST AT 60°F IN ACCORDANCE WITH NESC C2-2012.
    TENSIONS: CONDUCTOR_____13,500 LB
    OGW_____5400 LB
    WIND ON WIRES_____26 PSF
13. "H" INDICATES HEIGHT PORTION OF POLE STRUCTURE DESIGNATIONS LISTED IN SPECIFICATIONS WHICH IS HEIGHT FROM TOP OF BASE PLATE OR GROUNDLINE TO BOTTOM INSULATOR ATTACHMENT.
14. DIAMETER "D" SHALL BE MAXIMUM POLE BASE DIAMETER PLUS 1 FOOT.
15. EMBEDMENT DEPTH "E" SHALL BE AS SHOWN IN SPECIFICATIONS.

A	2-11-16 A7-BGH	REVISED NOTES 12, 13, 14, AND 15. MINOR REVISIONS.

UNITED STATES DEPARTMENT OF ENERGY
WESTERN AREA POWER ADMINISTRATION
HEADQUARTERS – LAKEWOOD, COLORADO

TRANSMISSION LINE STRUCTURES
281D STEEL POLE STRUCTURES
OUTLINE AND DESIGN LOADS

DESIGNED BOBBY HAGLER APPROVED DOUG HANSON
CIVIL ENGINEERING MANAGER

CAD	AUGUST 16, 2010	43-281D	2200

Plotted By:ohagler Mar 08, 2016- 10:47am
IMAGES:
P:\ohagler\43_281_d_2200a.dwg Last Saved By: Hagler, Bobby on 3/8/2016 10:38 AM

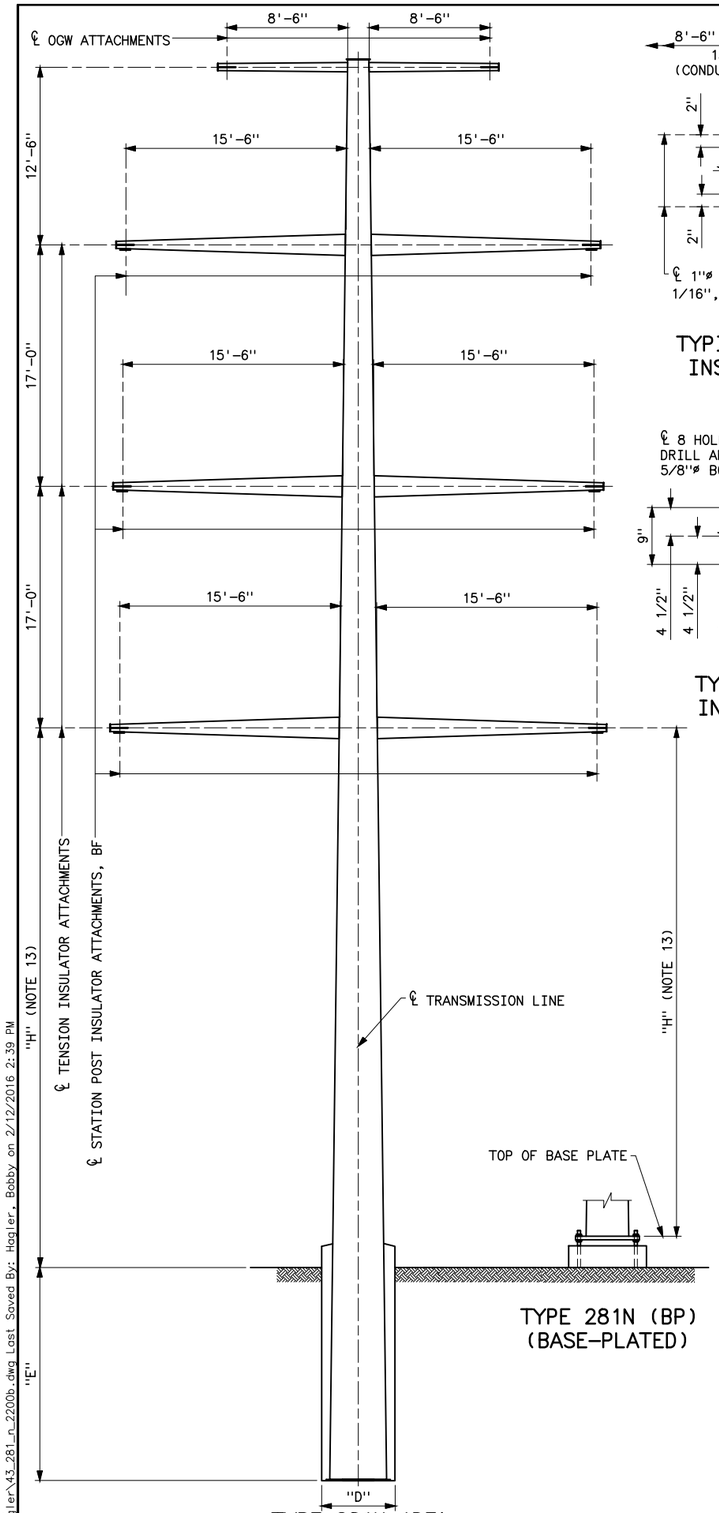

TYPE 281N (BP)
(BASE-PLATED)

TYPE 281N (DE)
(DIRECT-EMBEDDED)

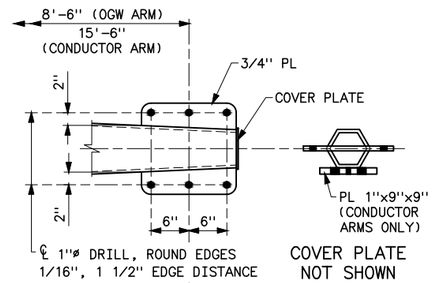

TYPICAL OGW AND TENSION
INSULATOR ATTACHMENTS

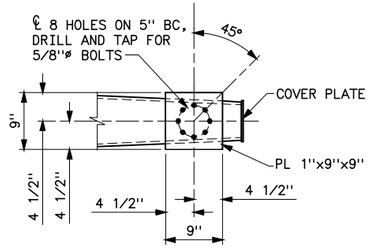

TYPICAL STATION POST
INSULATOR ATTACHMENT
(CONDUCTOR ARMS ONLY)

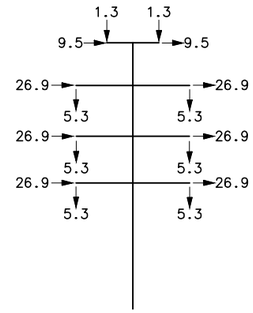

CASE A – NESC
LIGHT INTACT
95° LINE ANGLE
WIND ON STRUCTURE = 22.5 PSF
DEAD LOAD OF STRUCTURE x 1.5

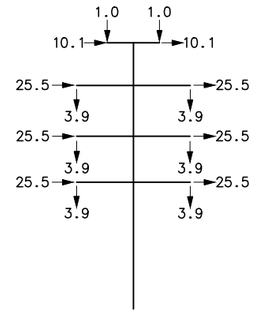

CASE B – HIGH
WIND INTACT
95° LINE ANGLE
WIND ON STRUCTURE = 31 PSF
DEAD LOAD OF STRUCTURE x 1.1

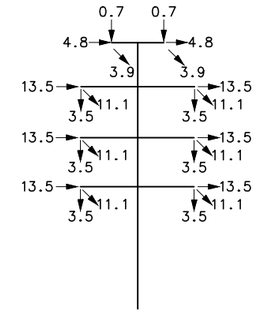

CASE C – NESC LIGHT
DEADEND
95° LINE ANGLE
WIND ON STRUCTURE = 22.5 PSF
DEAD LOAD OF STRUCTURE x 1.5

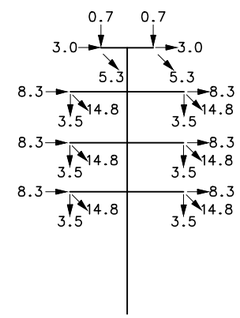

CASE D – NESC LIGHT
DEADEND
50° LINE ANGLE
WIND ON STRUCTURE = 22.5 PSF
DEAD LOAD OF STRUCTURE x 1.5

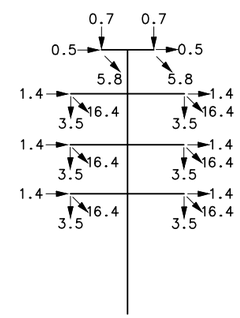

CASE E – NESC LIGHT
DEADEND
0° LINE ANGLE
WIND ON STRUCTURE = 22.5 PSF
DEAD LOAD OF STRUCTURE x 1.5

NOTES

1. LOADS ARE ULTIMATE VALUES AND INCLUDE OVERLOAD FACTORS.
2. WIRE LOADS ARE IN KIPS AND ARE TOTAL FOR ALL SPANS.
3. STRUCTURE AND ATTACHMENTS SHALL BE DESIGNED FOR THE SIMULTANEOUS APPLICATION OF DEAD LOAD, WIND ON THE STRUCTURE, AND WIRE LOADS FOR EACH LOADING CASE.
4. STRUCTURE SHALL BE DESIGNED SELF SUPPORTING; GUYS ARE NOT PERMITTED.
5. WIND PRESSURE SHOWN ON LOADING DIAGRAMS ARE BASED ON A SHAPE FACTOR OF 1.0 FOR CIRCULAR SECTIONS. FOR SECTIONS OTHER THAN CIRCULAR, MULTIPLY THE PRESSURES BY THE FOLLOWING SHAPE FACTORS:
   ELLIPTICAL=1.2 (MAJOR AXIS)
   0.9 (MINOR AXIS)
   16-SIDED=1.0
   12-SIDED=1.1
   8-SIDED=1.4
   6-SIDED=1.4
   4-SIDED=2.0
6. DESIGN LOADS ARE BASED ON 1272 KCMIL ACSS 54/19 "PHEASANT" CONDUCTOR AND 1/2ø, 7-STRAND, HIGH-STRENGTH STEEL OVERHEAD GROUND WIRES.
7. SUM OF ADJACENT SPANS_____2150 FT
8. LOW POINT DISTANCE_____1500 FT
9. LINE ANGLE_____50-95°
10. RULING SPAN_____1000 FT
11. NESC LIGHT: 0 RADIAL ICE, 9 PSF WIND AT 30°F.
    TENSIONS: CONDUCTOR_____9900 LB
    OGW_____3500 LB
12. HIGH WIND: 100 MPH 3-SECOND GUST AT 60°F IN ACCORDANCE WITH NESC C2-2012.
    TENSIONS: CONDUCTOR_____13,500 LB
    OGW_____5400 LB
    WIND ON WIRES_____26 PSF
13. "H" INDICATES HEIGHT PORTION OF POLE STRUCTURE DESIGNATIONS LISTED IN SPECIFICATIONS WHICH IS HEIGHT FROM TOP OF BASE PLATE OR GROUNDLINE TO BOTTOM INSULATOR ATTACHMENT.
14. DIAMETER "D" SHALL BE MAXIMUM POLE BASE DIAMETER PLUS 1 FOOT.
15. EMBEDMENT DEPTH "E" SHALL BE AS SHOWN IN SPECIFICATIONS.

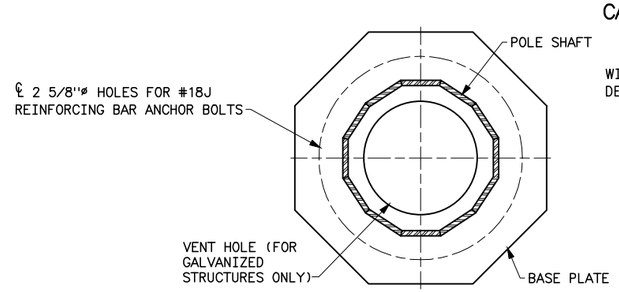

SECTION A–A

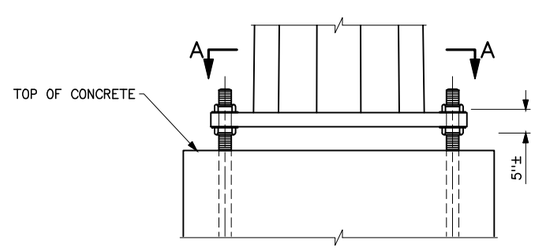

TYPE 281N (BP)
BASE DETAIL

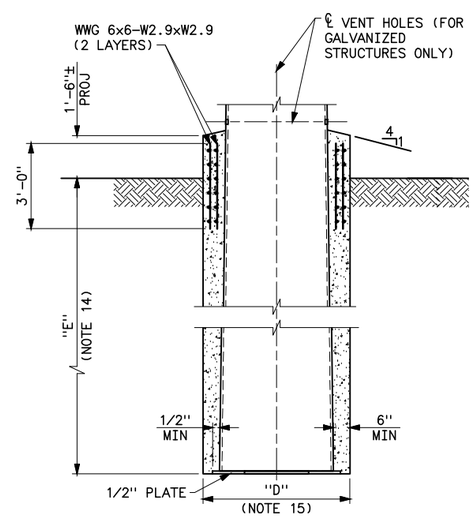

TYPE 281N (DE)
BASE DETAIL

B	2-11-16 A7-BGH	REVISED NOTES 12, 13, 14, AND 15. MINOR REVISIONS.
A	9-22-15 A7-BGH	REVISED TITLE BLOCK. ADDED NOTE 15. REVISED "H" DIMENSION TO TOP OF BASE PLATE.

UNITED STATES DEPARTMENT OF ENERGY
WESTERN AREA POWER ADMINISTRATION
HEADQUARTERS – LAKEWOOD, COLORADO

TRANSMISSION LINE STRUCTURES
281N STEEL POLE STRUCTURES
OUTLINE AND DESIGN LOADS

DESIGNED BOBBY HAGLER APPROVED DOUG HANSON
CIVIL ENGINEERING MANAGER

CA	AUGUST 16, 2010	43-281N	2200

Plotted By:ahagler Feb 12, 2016- 2:46pm
IMAGES:
P:\ahagler\43_281_n_2200b.dwg Last Saved By: Hagler, Bobby on 2/12/2016 2:39 PM

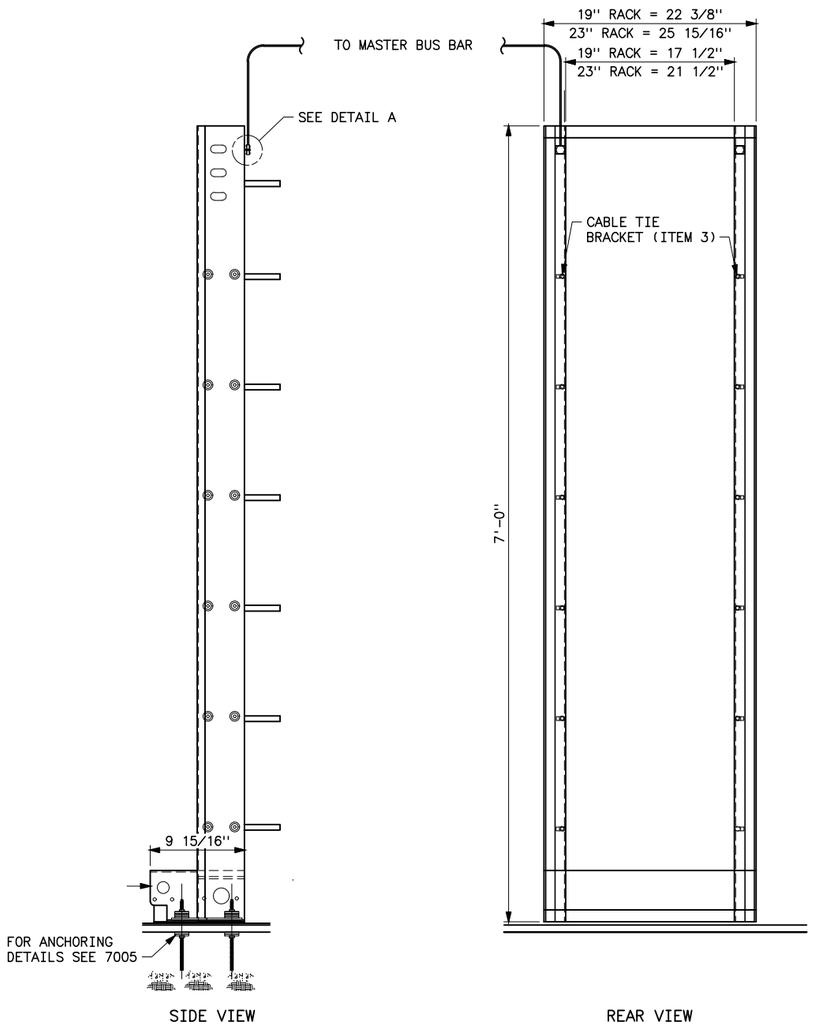

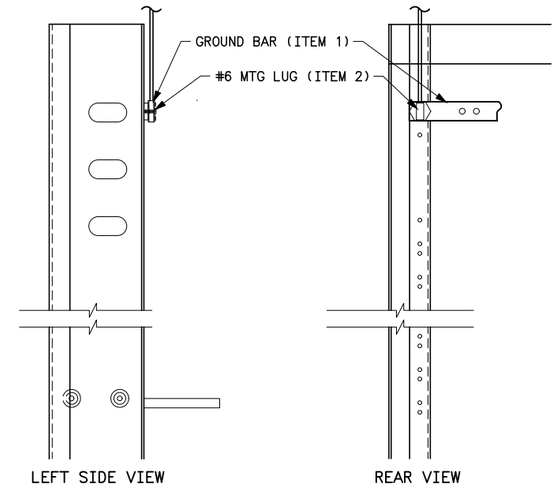

DETAIL A

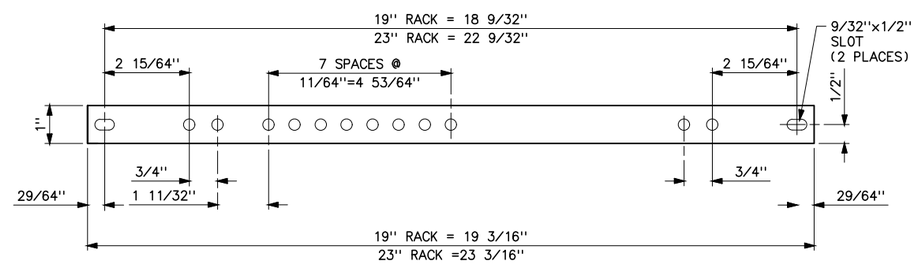

ITEM 1
1/4x1 COPPER GROUND BAR

ITEM 2
#6 MTG LUG

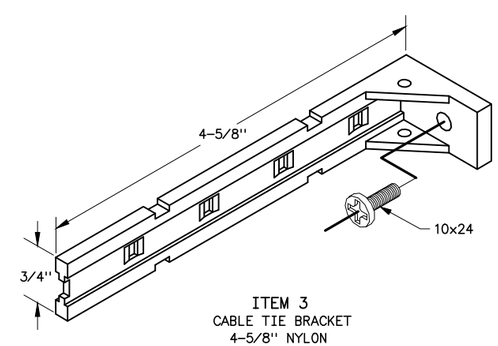

ITEM 3
CABLE TIE BRACKET
4-5/8" NYLON

REFERENCE DRAWING

EQUIPMENT RACK
ANCHORING & GROUNDING DETAILS _____53 7051

NOTES

1. UNLESS OTHERWISE NOTED, ALL RACKS ARE 7'-0" HIGH AND 19" WIDE.
2. RACK FLANGES ARE DRILLED FRONT AND REAR WITH EIA STANDARD 1.75" RACK UNIT (RU) HOLE PATTERNS.
3. ALL RACKS HAVE FRONT MOUNTED COVERED BASE GUARD RAIL.
4. SEE BUILDING DRAWINGS FOR FLOOR LAYOUT AND RACK LOCATION AND DESIGNATION.
5. EQUIPMENT RACKS FROM OTHER MANUFACTURERS CAN BE USED WITH ACCEPTANCE FROM COR.

SUPERSEDES DWG NO. 41 7004

UNITED STATES DEPARTMENT OF ENERGY
WESTERN AREA POWER ADMINISTRATION
HEADQUARTERS - LAKEWOOD, COLORADO

COMMUNICATIONS
STANDARD
EQUIPMENT RACK
LAYOUT & DETAILS

DESIGNED SCOTT JOHNSON APPROVED DAN HAMAI
SYSTEM CONTROL MANAGER

CAE	OCTOBER 25, 2016	53	7050

Plotted By:denton Oct 26, 2016- 6:36am IMAGES:
S:\projects\Misc\Standard\Drawings\Final\53_7050.dwg Last Saved By: Denton, Debra on 10/26/2016 6:35 AM
XREF(S):

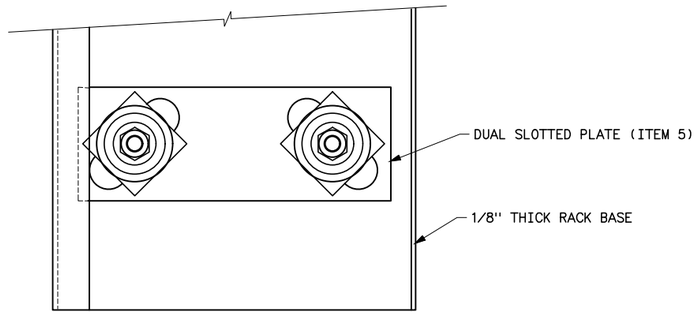

VIEW A–A

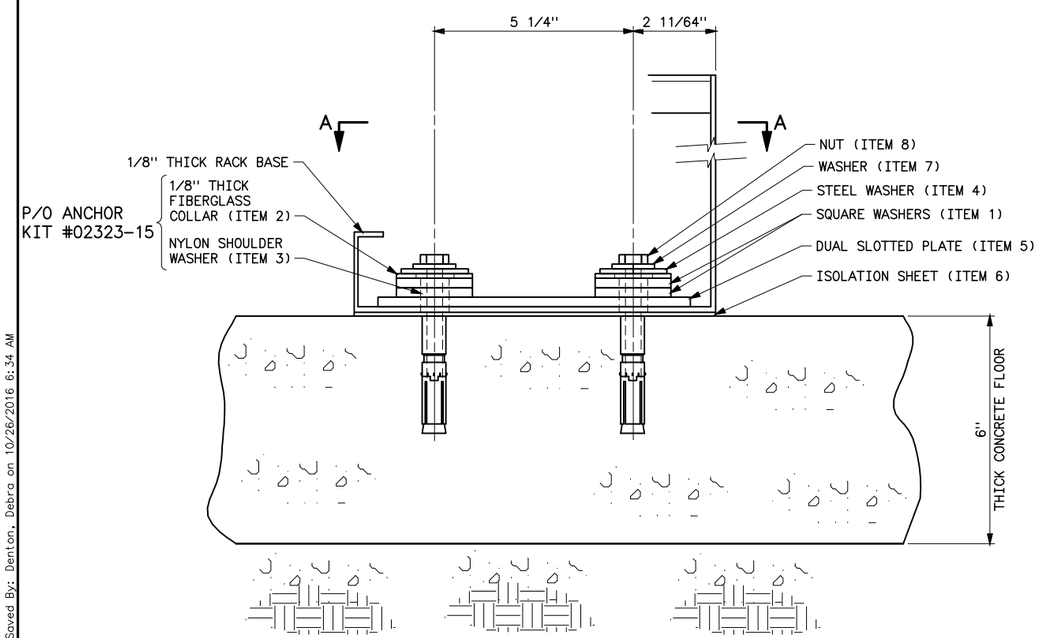

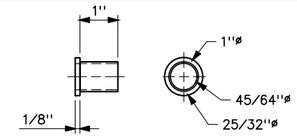

NYLON SHOULDER WASHER
ITEM 3

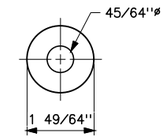

1/8" THICK STEEL WASHER
ITEM 4

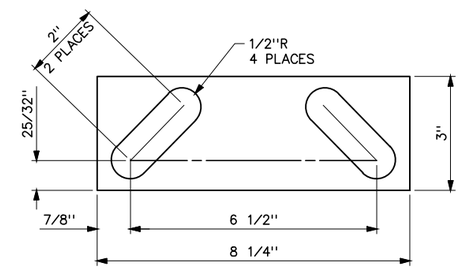

1/4" THICK DUAL SLOTTED PLATE
ITEM 5

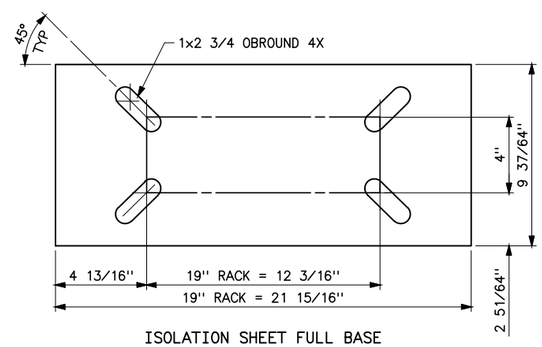

ISOLATION SHEET FULL BASE
1/16" THICK FIBERGLASS
ITEM 6

0 3 6 9 12
SCALE OF INCHES
3"=1'-0"

NOTES

1. ANCHOR KIT #02323-15 COMES WITH ANCHOR BOLTS USED TO MOUNT RACKS ON CONCRETE FLOORS.
2. RACKS MOUNTED ON RAISED FLOORS, USE ISOLATED KIT #01464-01, HILTI ANCHOR #HSL-I-12M, AND 12MM THREADED ROD.
3. EQUIVALENT RACKS FROM DIFFERENT MANUFACTURERS CAN BE USED WITH ACCEPTANCE FROM COR.

REFERENCE DRAWING

EQUIPMENT RACK – LAYOUT & DETAILS_____53 7050

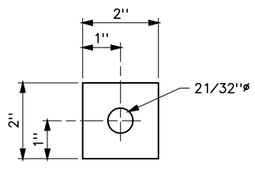

1/4" THICK SQUARE WASHER
ITEM 1

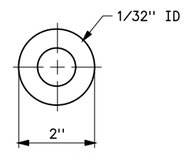

1/8" THICK FIBER WASHER
ITEM 2

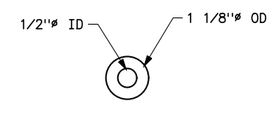

1/8" THICK HILTI WASHER
ITEM 7

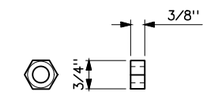

12mm HILTI NUT
ITEM 8

0 1 2 3 4 5 6
SCALE OF INCHES
6"=1'-0"

SUPERSEDES DWG NO. 41 7005

UNITED STATES DEPARTMENT OF ENERGY
WESTERN AREA POWER ADMINISTRATION
HEADQUARTERS – LAKEWOOD, COLORADO

COMMUNICATIONS
STANDARD
EQUIPMENT RACK
ANCHORING & GROUNDING DETAILS

DESIGNED SCOTT JOHNSON APPROVED DAN HAMAI
SYSTEM CONTROL MANAGER

C A E	OCTOBER 25, 2016	53	7051

Plotted By:denton Oct 26, 2016- 6:37am IMAGES:
S:\projects\Misc\StandardDrawings\Drawings\Final\53_7051.dwg Last Saved By: Denton, Debra on 10/26/2016 6:34 AM
XREF(S):