Western
AREA POWER
ADMINISTRATION

CONSTRUCTION STANDARDS

STANDARD 1

GENERAL REQUIREMENTS

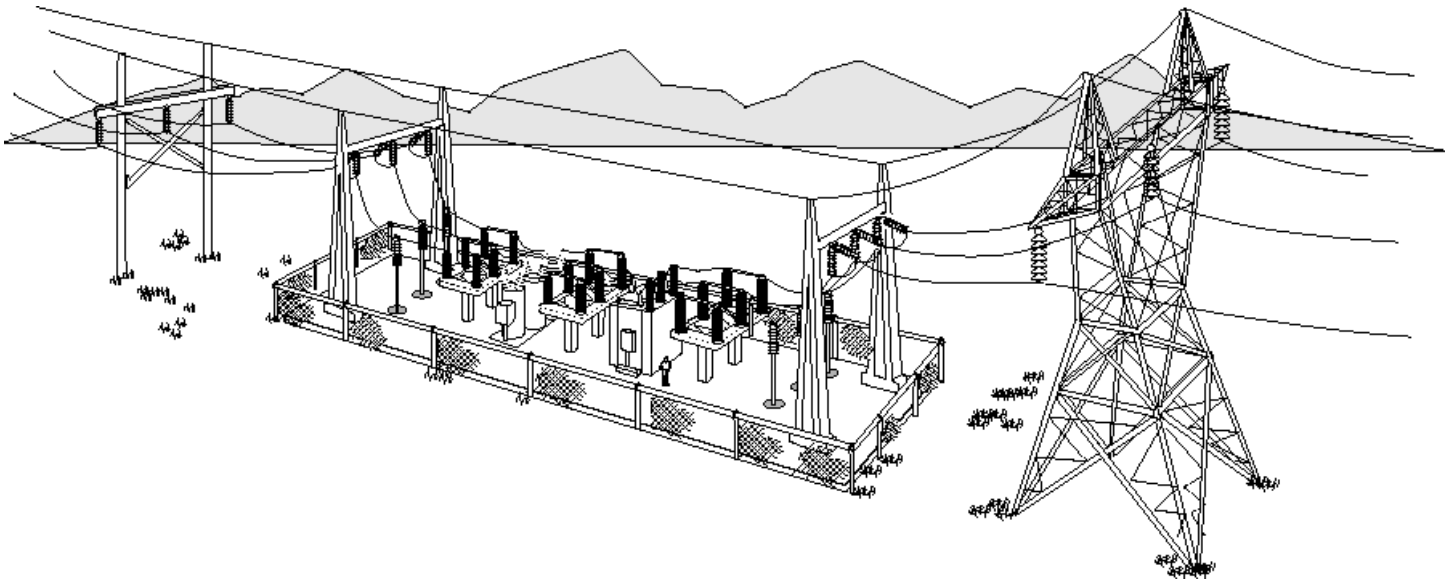

July 2009

SAFETY
A HABIT TO LIVE BY

STANDARD 1 - GENERAL REQUIREMENTS

TABLE OF CONTENTS

Page Number

SECTION 1.1--GENERAL CONDITIONS 5

1.1.1 STANDARDS AND PROJECT SPECIFICATIONS 5
1. General 5
2. Standards 5
3. Project Specifications 5
4. Bidding Schedule 5
5. Applicability of Standards 5
6. Conflict in Requirements 5

1.1.2 GENERAL CONTRACT DEFINITIONS 5

1.1.3 COMMENCEMENT, PROSECUTION, AND COMPLETION OF WORK 6
1. Prosecution of the Work 6
2. Safety and Health Program 6
3. Outage Restrictions 6
4. Submittal Approval Time 6

1.1.4 CONSTRUCTION PROGRAM 6
1. General 6
2. Estimate of Earnings 6
3. Submittals 6
4. Format and Detail 7

1.1.5 CONSTRUCTION SURVEYS 7
1. General 7
2. Submittals 7
3. Personnel Qualifications 7
4. Equipment and Material 7
5. Records 8
6. Data Collectors 8
7. Field Books 8
8. Differing Conditions 8
9. Cleanup 8
10. Access Roads 8
11. Degree of Accuracy 8

1.1.6 BREAKDOWN OF CONTRACT PRICES 10
1. General 10
2. Submittals 10
3. Format and Detail 10
4. Subcontractor's Prices 10
5. Forms 10

SECTION 1.2--MATERIAL 11

1.2.1 GOVERNMENT-FURNISHED MATERIAL 11
1. Estimated Delivery Dates 11
2. Estimated Costs 11
3. Points of Delivery 11

4. Unloading of Material 11
5. Drawings and Data 11

1.2.2 CONTRACTOR-FURNISHED MATERIAL 11
1. General 11
2. Drawings and Data 11

1.2.3 MATERIAL INSPECTION 11
1. General 11
2. Substitution of Material 12
3. Inspection of Material 12

1.2.4 REFERENCE STANDARDS 12
1. General 12
2. Obtaining Reference Standards 12
3. Addresses 12

SECTION 1.3--LOCAL CONDITIONS 15

1.3.1 RIGHTS-OF-WAY 15

1.3.2 ACCESS TO THE WORK AND HAUL ROUTES 15
1. General 15
2. Investigations 15
3. Existing Roads 15
4. Haul Routes 15

1.3.3 USE OF LAND FOR CONSTRUCTION PURPOSES 15
1. Government Land 15
2. Private Land 15

1.3.4 PROTECTION OF EXISTING INSTALLATIONS 15
1. General 15
2. Submittals 15
3. Protective Installations 16
4. Contractor’s Noncompliance 16

1.3.5 RAILROADS, HIGHWAYS, AND UTILITY LINES 16
1. General 16
2. Protective Measures 16
3. Stringing Over Energized Power Lines 16

SECTION 1.4--SAFETY AND HEALTH 17

1.4.1 SAFETY AND HEALTH, GENERAL 17
1. General 17
2. Conflict in Requirements 17
3. Compliance with Codes and Standards 17
4. Superintendent Qualifications and Responsibilities 17
5. Contractor's Safety and Health Program 18
6. Job Hazard Analysis 19
7. Joint Western and Contractor Safety Meetings 19
8. Failure to Comply 20
9. Accident Records and Reporting 20

10. Testing and Data 20

1.4.2 PUBLIC SAFETY 21
1. Roads 21
2. Railroads 21

1.4.3 EMPLOYEE REQUIREMENTS 21
1. General 21
2. Training 21
3. Physical Examination 21
4. Operators 22
5. Qualified Climber 22

1.4.4 PERSONAL PROTECTIVE EQUIPMENT 22
1. General 22
2. Minimum Wearing Apparel 22
3. Hard Hats 22
4. High-Visibility Clothing 22
5. Fall Prevention Systems and Fall Arresting Devices 22
6. Scaffolding 23
7. Ladders 23
8. Respiratory Protection 23
9. Chemical Protection Equipment 24
10. Protective Chaps 24
11. Foot Protection During Chain Saw Use 24

1.4.5 EXCAVATION 24
1. Buried Utilities 24
2. Method of Cable Location 24
3. Unattended Excavation 24
4. Equipment Access 24
5. Employee Protection 24

1.4.6 EXPLOSIVES AND BLASTING 25
1. General 25
2. Blasting Plans 25
3. Explosives 25
4. Drilling Dust Control 25
5. Vibration and Damage Control 25
6. Blaster Certification 25

1.4.7 MATERIAL HANDLING AND STORAGE 25
1. General 25
2. Critical Lifts 25

1.4.8 STRUCTURE ERECTION 26
1. General 26
2. Communication 26
3. Temporary Structure Support 26
4. Tools 26

1.4.9 ELECTRICAL MINIMUM APPROACH DISTANCE 26

1.4.10 EQUIPMENT 27
1. General 27
2. Rollover Protective Structures and Seat Belts 27

1.4.11 LIFTING DEVICES 27
1. General 27
2. Mobile Cranes 27
3. Aerial Work Devices 27
4. Forklifts as Elevated Platforms 27
5. Work Platforms 27
6. Fabricated Mobile Lifting Devices 28
7. Load Performance Test 28
8. Repairs 28
9. Rigging 28
10. Unknown Loads 28

1.4.12 CONDUCTOR OR OVERHEAD GROUND WIRE SUSPENDED WORK CARTS 28
1. Design 28
2. Hoisting and Installing 28
3. Existing Facilities 28

1.4.13 HELICOPTERS 29
1. General 29
2. Program Requirements 29

1.4.14 GROUNDS, BONDS, AND OTHER PROTECTIVE DEVICES 30
1. General 30
2. Definitions 30
3. Testing and Certification 32
4. Installation and Removal of Protective Ground Leads 33

1.4.15 CLEARANCES, HOT LINE ORDERS, AND SPECIAL WORK PERMITS 33
1. General 33
2. Definitions 33
3. Procedures to Obtain Clearances and Hot Line Orders 33
4. Special Work Permit Procedures 34
5. Procedures for Release of a Special Work Permit 34
6. Transfer of Responsibility for Special Work Permit 35

1.4.16 SUBSTATION SAFETY 35
1. General 35
2. Supervision and Authorization 35
3. Restricted Areas 35
4. Electrical Equipment Containing Sf_6 35
5. Additional Requirements 36

1.4.17 TRANSMISSION LINE SAFETY 36
1. General 36
2. Supervision and Authorization 36
3. Stringing Plan 36
4. Conductor and Overhead Ground Wire Stringing 36

1.4.18 REMOVAL OR UPGRADING OF EXISTING TRANSMISSION LINE 40

STANDARD 1 - GENERAL REQUIREMENTS

SECTION 1.1--GENERAL CONDITIONS

1.1.1 STANDARDS AND PROJECT SPECIFICATIONS:

1. GENERAL: Western uses standards and project specifications for constructing substation and transmission line projects. The standards, project specifications, standard drawings, and project drawings together completely describe the project to be constructed.

2. STANDARDS: The standards contain general requirements for constructing substation and transmission line projects. The standards are specifications that describe material, standards of quality, and requirements that are applicable to Western construction projects.

3. PROJECT SPECIFICATIONS: Project specifications are issued for each project. The project specifications describe the specific requirements for the construction project, describe the work contained in Bidding Schedule items, and may specify measurement for payment. The project specifications may list requirements that are in addition to the standards and may list requirements that modify or take exception to the standards.

4. BIDDING SCHEDULE: The Bidding Schedule is listed in Section B of the contract. If the Bidding Schedule contains a single item for the entire project, then the cost of performing work under the contract shall be included in the single item. If the Bidding Schedule contains numerous items, then the cost of performing work shall be included in the appropriate items as listed in the project specifications. If work, required by the specifications and drawings, is not listed as included in a separate item, then the cost of the work shall be included in other Bidding Schedule items as applicable.

5. APPLICABILITY OF STANDARDS: Use only the portions of each standard that are relevant to work described in the project specifications.

6. CONFLICT IN REQUIREMENTS: If a conflict occurs between the project specifications and the standards, the project specifications shall govern.

1.1.2 GENERAL CONTRACT DEFINITIONS:

In addition to the terms and abbreviations covered in Section 1.2.4, “Reference Standards” and the “Definitions” and “Specifications and Drawings for Construction” Contract Clauses, the terms and definitions listed below apply:

“Western” or “Western Area Power Administration” as used herein means the Government.

“COR” as used herein means the person duly appointed as the Contracting Officer’s Representative.

“Approved” or “approval” as used herein shall mean approved by the COR, except where another specific authority is designated.

“Material” or “materials,” as used herein to denote items furnished by the Contractor or by Western, mean machinery, equipment, components, products, or any other item incorporated in the work.

“Provide” or “providing” as used herein shall mean “furnish and install” or “furnishing and installing,” including labor and material to construct or install an item complete and ready for use.

Where “provide,” “install,” “furnish,” “repair,” or words of similar import are used, it shall be understood that reference to the Contractor is intended unless clearly indicated otherwise.

“Section” as used in the standards shall mean written text designated by a section number (e.g., 1.1.6) and include subsections under the referenced designation.

“PCB” or “PCBs” as used herein shall mean polychlorinated biphenyl or polychlorinated biphenyls.

“Bidding Schedule” as used herein shall mean Section B of this solicitation.

“Removing” as used herein shall mean remove and dispose unless otherwise directed.

1.1.3 COMMENCEMENT, PROSECUTION, AND COMPLETION OF WORK:

1. PROSECUTION OF THE WORK: The capacity of the Contractor's construction plant, sequence of operations, method of operation, and the forces employed shall be subject to the COR's approval and shall ensure the completion of the work within the specified period of time.

2. SAFETY AND HEALTH PROGRAM: Prior to start of field construction operations at the job site, submit a Safety and Health Program as specified under Section 1.4, "Safety and Health.”

3. OUTAGE RESTRICTIONS: Western’s substations and transmission lines are under the jurisdiction of Western's power operation and maintenance staff and are subject to their standard operating procedures and regulations. Provisions will be made to de-energize only those buses and circuits necessary to accomplish the work. Western will give outages based on system operating conditions at the time outages are requested. Time and length of outages will be at Western's discretion. Certain operating facilities will be released only at prescheduled times in order to maintain the continuity of commercial electrical service.

4. SUBMITTAL APPROVAL TIME: The standards and project specifications list approval times for submittals. These review times apply to each separate submittal or resubmittal whether drawings or data are approved, not approved, or returned for revision. If Western uses time in excess of the above-stated number of days for reviewing any submittal or resubmittal, the excess time will be added to time allowed for completion of the work affected by such excess time; except, if the review of two or more separate submittals or resubmittals is late and results in concurrent days of excess time, such days will be counted only once in computing an extension of completion date. Number of calendar days required for review of drawings or data submitted or resubmitted for approval will include the date drawings or data are received by Western and will extend through date of return mailing to the Contractor.

1.1.4 CONSTRUCTION PROGRAM:

1. GENERAL: Submit a construction program for approval in accordance with the contract clause titled "Schedules for Construction Contracts.” Pending approval of the program, proceed with work in accordance with the proposed construction program.

2. ESTIMATE OF EARNINGS: Construction program shall show the percentage of work for each line item or portion of work scheduled for completion each month and include an estimate of earnings by months. Program approval shall not obligate Western to provide funds in any manner other than as provided in the contract clauses and special contract requirements.

3. SUBMITTALS:

   (1) Form of Submittal: Submit three prints of construction program and each revised program.

(2) Revisions: Revise construction program to keep it current; enter on program actual progress at end of each progress payment period, or at such other intervals as directed, and submit two marked prints of program to the COR.

4. FORMAT AND DETAIL: Construction program shall show in detail the Contractor's schedule of operations and shall provide for orderly performance of the work. Construction program shall show the following:

(1) Sequence of operations.

(2) Dates for commencing and completing work on the controlling features.

(3) Order issue and delivery dates for Contractor-furnished material.

(4) Lead times required for Government-furnished construction drawings. Lead times greater than 75 days shall be justified.

(5) Dates Contractor-prepared drawings will be submitted for approval.

(6) Dates and duration of required power outages.

1.1.5 CONSTRUCTION SURVEYS:

1. GENERAL: Conform to the requirements of the contract clause titled "Layout of Work" and to the following requirements:

(1) Establish lines and grades from existing structures or survey control as directed by the COR for control and measurements at the site.

(2) Establish lines and grades that control the work at the location so that they are set to the limit marks and tolerances identified in Section 1.1.5.11 “Degree of Accuracy" or as shown on the drawings.

(3) No payment will be made for work necessary to correct misaligned tangent or facility structures or features in either the horizontal or vertical plane.

2. SUBMITTALS:

(1) Prior to beginning any phase of the survey work, submit to the COR a proposed plan that demonstrates that the lines and grades, established by the Contractor for control of the work, will meet the requirements of the project specifications.

(2) Submit data collector dump, computer printout, and field books to the COR.

3. PERSONNEL QUALIFICATIONS: Survey work shall be done under the direction of a qualified surveyor or engineer approved by the COR. The number of qualified surveying personnel required will vary with the work loads, and sufficient qualified survey personnel shall be available to perform the required work.

4. EQUIPMENT AND MATERIAL: Furnish labor, equipment, supervision, transportation, operation supplies, and incidentals for the work.

5. RECORDS: Survey notes that show field procedures and field data shall be recorded and certified by the person in responsible charge of the survey work.

6. DATA COLLECTORS: If data collectors are utilized in conjunction with total station equipment, the COR shall be provided with a certified copy of the data collector dump and the computer printout of the survey calculations showing initial and finalized data. The data collector dump shall be annotated to reflect, at each occupied station, the date and time data is collected, stations occupied, back sight, foresight, angle turned, distance measured, and difference in vertical elevation.

7. FIELD BOOKS: If field books are utilized in conjunction with conventional equipment, the original field notes, computations, and other records for the purpose of layout and quantity surveys shall be recorded in duplicating field books. Immediately upon completing and reducing the notes for a survey or portion of a survey, furnish a duplicate copy to the COR. Upon completing a field book, submit the original field survey book to the COR for filing.

8. DIFFERING CONDITIONS: Conditions encountered during construction that are different from those represented on the drawings shall be brought to the attention of Western's Field Representative. Once verified by Western's Field Representative, the Contractor shall accurately record the condition and furnish the corrected drawing to Western in accordance with Standard 15 - Drawings Section 15.2, "As-Built Drawings".

9. CLEANUP: Except for permanent survey markers and material that locate proposed facilities, stakes, pins, rebar, spikes, and other material shall be removed from the surface and within the top 15 inches of the topsoil as a part of final cleanup.

10. ACCESS ROADS: Stake and mark Western-provided access road rights-of-way in accordance with the legal descriptions and tract plats furnished by Western.

11. DEGREE OF ACCURACY: Provide the following:

    (1) Substations: Points for cross sections shall be located to the nearest 0.1 (1/10th) of a foot horizontally and vertically. Levels shall close within 0.05 (5/100th) of a foot times the square root of the length of the circuit in miles. Final grade stakes (blue tops) for concrete shall be set to 0.01 (1/100th) of a foot. Alignment of tangents and curves shall be within 0.1 (1/10th) of a foot. Points for structures shall be set to the nearest 0.01 (1/100th) of a foot, except where operational function of special features or installations of metalwork and equipment require closer tolerances.

    (2) Access Roads: On land in rural areas, establish the centerline of the access road with a horizontal positional closure of 1:2500 or better. On land in residential or commercial areas, establish the centerline of the access road with a horizontal positional closure of 1:5000 or better.

    (3) Transmission Lines:

        1) Lattice Steel Towers:

        Survey Marks for Points of Intersection (P.I.) and Tangent Transmission Line Structures: In grassland, pasture, desert, or grazing areas, the rebar is flush with the ground. In crop land, the rebar is buried 12 inches to 14 inches below ground surface. Western has located the center of each transmission line P.I. structure on the transmission line centerline and marked it with a #5 rebar (5/8 inch) affixed with an aluminum cap imprinted with the survey control number and punch mark.

Western has located the center of each tangent transmission line structure on the transmission line centerline and marked it with a #4 rebar (1/2 inch). Western will only provide survey crew services to re-establish transmission line P.I.

a. Leg Extension Determination Sheets: After award of contract, the COR will provide the Contractor with copies of Western's "Leg Extension Determination Sheet."

b. Horizontal and Vertical Control: After award of contract, the COR will furnish the Contractor with data that may include a set of drawings titled "Schematic Control and Land Monumentation Diagram" which identifies the horizontal and vertical control network established by Western. Using the horizontal control at the P.I.'s furnished by Western:

(a) Stake auger points for footings and construct the transmission line towers to plus or minus 1/10th foot of the base elevation shown on the plan and profile drawings.

(b) Recover structure sites and verify or re-establish the horizontal location of tangent structures sites; and insure the centerline point of each transmission line structure site is within 0.2 foot of the true tangent line between P.I.'s and within plus or minus 1.0 foot of the correct centerline station.

(c) Verify that the ahead and back span lengths at recovered tangent structure sites agree with the plan and profile drawings. The results, including the magnitude of any difference, shall be given to the COR prior to foundation construction.

2) Single Shaft Steel, H-Frame Steel Pole, Wood Pole Single, and Wood Pole H-Frame:

3) Steel Pole Structures, Light Duty Steel Pole Structures, and Wood Pole Structures:

Survey Marks for P.I. and Tangent Transmission Line Structures: In grassland, pasture, desert, or grazing areas, the rebar is flush with the ground. In crop land, the rebar is buried 12 inches to 14 inches below ground surface.

Western has located the center of each transmission line P.I. structure on the transmission line centerline and marked it with a #5 rebar (5/8-inch-diameter) affixed with an aluminum cap imprinted with the survey control number and punch mark. Western has located the center of each tangent transmission line structure on the transmission line centerline and marked it with a #4 rebar (1/2-inch-diameter). Western will only provide survey crew services to re-establish transmission line P.I.

a. Horizontal and Vertical Control: After award of contract, the COR will furnish the Contractor with data that may include a set of drawings titled "Schematic Control and Land Monumentation Diagram" which identifies the horizontal and vertical control network established by Western. Using the horizontal control at the P.I.'s furnished by Western:

(a) Recover structure sites and verify or re-establish the horizontal location of tangent structure sites; and insure the centerline point of each transmission line structure site is within 0.2 foot of the true tangent line between P.I.'s and within plus or minus 1.0 foot of the correct centerline station.

(b) Verify that the ahead and back span lengths at recovered tangent structure sites agree with the plan and profile drawings. The results, including the magnitude of any differences, shall be given to the COR prior to foundation construction.

(c) Stake auger points for the footings or structures and, if required, the guys for tangent and P.I. structures. Guys shall be located with an accuracy of plus or minus 1 foot (1.0). The accuracies shall be measured from angle points shown on the plan and profile drawings.

(4) Microwave Stations: In remote areas, Western will locate and mark tower and support centers with #4 or #5 rebar. Western will provide a reference azimuth from the tower center.

1) In remote areas, establish three protected reference points for the Western-established tower or support center. These reference points shall be established outside of the area under construction.

2) Antennas shall be oriented within 1°, plus or minus, of the azimuth specified. Towers shall be constructed so the antenna is located within 6 inches (0.5 foot), plus or minus, of the height specified.

1.1.6 BREAKDOWN OF CONTRACT PRICES:

1. GENERAL: In addition to the requirements of the contract clause titled "Payments Under Fixed Price Construction Contracts," submit a detailed breakdown of the total contract price.

2. SUBMITTALS: Within 30 calendar days after the date of the Notice to Proceed, submit three copies of a breakdown of contract prices to the Electrical Engineer and one copy to the COR.

3. FORMAT AND DETAIL: The breakdown of contract costs shall be arranged by bid item, and each bid item shall further be divided into the various kinds of work which make up the item. Whether there are a few bid items or where there is only one lump-sum bid item, contract costs shall be furnished for the various kinds of work covered in the project specifications. The cost breakdown shall show the quantity of each type of work; the unit price for the material, labor, and equipment; and the total price.

4. SUBCONTRACTOR'S PRICES: Obtain cost information from subcontractors as required to provide the Government with the actual breakdown of the bid price.

5. FORMS: Western may furnish forms for the Contractor's use in providing the cost breakdown.

SECTION 1.2--MATERIAL

1.2.1 GOVERNMENT-FURNISHED MATERIAL:

Government-furnished material shall be in accordance with the following:

1. ESTIMATED DELIVERY DATES: Estimated delivery dates are provided for developing a construction program. These delivery dates are not guaranteed, but Western will make reasonable efforts to secure delivery of the items within the time period shown.

2. ESTIMATED COSTS: Estimated costs are provided so bidders may include applicable Federal, State, and local taxes and duties on Government-furnished material. These costs are not guaranteed, but are Western's best estimates at time of bidding.

3. POINTS OF DELIVERY: Load and haul material from the delivery points to the work.

4. UNLOADING OF MATERIAL: Provide prompt unloading of material. Western will back charge the Contractor for demurrage charges incurred due to failure to unload trucks promptly. Report to the COR, in writing, within 24 hours after unloading, any shortage or damage to material when delivered.

5. DRAWINGS AND DATA: Western will furnish one print of wiring diagrams for Government-furnished control, metering, relaying, and communications equipment when the equipment is delivered.

1.2.2 CONTRACTOR-FURNISHED MATERIAL:

1. GENERAL: Furnish material for completing the work. Material shall be new and of current manufacture. Refer to the contract clause titled "Material and Workmanship" for additional material requirements.

2. DRAWINGS AND DATA: Western will furnish wiring diagrams of Contractor-furnished equipment 90 days after receipt of informational drawings and data as required in Standard 9 - Substation - Electrical, Section 9.1.3 fill in section number.

1.2.3 MATERIAL INSPECTION:

1. GENERAL: Submit purchase orders and advance notification as follows:

   (1) Purchase Orders: Submit purchase orders for the electrical equipment and for the steel structures. Within 10 working days after purchase orders are awarded, submit one copy of electrical equipment purchase orders to the Electrical Engineer and one copy of steel structure purchase orders to the Civil Engineer. The purchase orders shall describe the material and give the Bidding Schedule item number. To permit scheduling of Government inspection, furnish the following information for each purchase order: the manufacturer, manufacturer location, name of contact and phone number, start date and duration of fabrication, applicable dates of testing, and shipping date.

   (2) Advance Notification: To permit scheduling of Government inspection, provide at least 7 workdays' advance notification of when Government inspection of material or witness of test is required. Seven workdays' advance notification shall also be given prior to shipping material.

2. SUBSTITUTION OF MATERIAL: Provide the type and grade of material specified from any source. If the specified material is not available, substitute material, approved in writing, may be used. Adjustment will be made in favor of Western if the substitute material costs less to the Contractor than the material specified.

   If the substitution involves an adjustment in Western's favor, then a contract change will be issued in accordance with the "Changes" clause.

3. INSPECTION OF MATERIAL: Inspect material in accordance with the “Inspection of Construction” clause.

1.2.4 REFERENCE STANDARDS:

1. GENERAL: Reference to ANSI, ASTM, and other reference standards and codes shall be to the most current edition. If material is not specified by ANSI, ASTM, or other standards or codes, material furnished shall be of standard commercial quality. Where types, grades, or other options offered in the referenced specifications are not specified in these standards or project specifications, material furnished will be acceptable if in accordance with any one of the types, grades, or options offered.

2. OBTAINING REFERENCE STANDARDS: Standards, and codes published by associations or other standardizing agencies shall be obtained directly from those agencies.

3. ADDRESSES: Obtain other referenced specifications, standards, and codes from the addresses listed below. Information on specifications, standards, and codes not listed below may be obtained from the Civil or Electrical Engineer.

   AA-Aluminum Association, Inc., 900 19th Street NW., Suite 300, Washington, DC 20006-2168

   AAMA-American Architectural Aluminum Manufacturers Association, 1540 East Dundee Road, Suite 310, Palatine, IL 60067

   AASHTO-American Association of State Highway and Transportation Officials, 444 North Capitol Street NW., Suite 249, Washington, DC 20001

   ACI-American Concrete Institute, 22400 West 7 Mile Road, Detroit, MI 48219-1849

   AISC-American Institute of Steel Construction, 1 East Wacker Drive, Suite 3100, Chicago, IL 60601-2001

   AISI-American Iron and Steel Institute, 1101 17th Street NW., Suite 1300, Washington, DC 20036

   AMCA-Air Movement and Control Association, Inc., 30 West University Drive, Arlington Heights, IL 60004-1893

   ANSI-American National Standards Institute, 11 West 42nd Street, 13th Floor, New York, NY 10036

   APA-American Plywood Association, 7011 South 19th Street, P.O. Box 11700, Tacoma, WA 98411-0700

   ASHRAE-American Society of Heating, Refrigerating, and Air-Conditioning Engineers, Inc., 1791 Tullie Circle NE., Atlanta, GA 30329-2305

STANDARD 1 - GENERAL REQUIREMENTS

ASME-American Society of Mechanical Engineers, 345 East 47th Street, New York, NY 10017

ASTM-American Society for Testing and Materials, 1916 Race Street, Philadelphia, PA 19103-1187

AWI-Architectural Woodwork Institute, P.O. Box 1550, Centerville, VA 22020

AWPA-American Wood-Preservers' Association, P.O. Box 286, Woodstock, MD 21163-0286

AWS-American Welding Society, Inc., 550 NW. Le Jeune Road, P.O. Box 351040, Miami, FL 33125

AWWA-American Water Works Association, 6666 West Quincy Avenue, Denver, CO 80235

BIA-Brick Institute of America, 1750 Old Meadow Road, McLean, VA 22102

BuRec-Bureau of Reclamation, Engineering and Research Center, Denver Federal Center, Building 67, Denver, CO 80225

CFR-Consumer Product Safety Commission, Washington, DC 20207

CISCA-Ceilings and Interior Systems Contractors Association, 579 West North Avenue, Elmhurst, IL 60126

EIA-Electronic Industries Association, c/o Global Engineering, 15 Inverness Way East, Englewood, CO 80112-5704

EPA-Environmental Protection Agency, Washington, D.C.

FM-Factory Mutual Engineering and Research Corp., 1151 Boston-Providence Turnpike, Norwood, MA 02062

IEEE-Institute of Electrical and Electronic Engineers, 445 Hoes Lane, P.O. Box 1331, Piscataway, NJ 08855-1331

IES-Illuminating Engineering Society, 345 East 47th Street, New York, NY 10017

IPCEA-Insulated Cable Engineers Association, P.O. Box P, South Yarmouth, MA 02664

JIC-Joint Industrial Council, 7901 Westpark Drive, McLean, VA 22101

LRFD - Load and Resistance Factor Design, AISC, Manual of Steel Construction, American Institute of Steel Construction, 1 East Wacker Drive, Suite 3100, Chicago, IL 60601-2001.

MBMA-Metal Building Manufacturers Association, Inc., 1300 Sumner Avenue, Cleveland, OH 44115

NAAMM-National Association of Architectural Metal Manufacturers, 600 South Federal Street, Suite 400, Chicago, IL 60605

NACE-National Association of Corrosion Engineers, 1440 South Creek Drive, P.O. Box 218340, Houston, TX 77218-8340

NEC-National Electrical Code, National Fire Protection Association, One Batterymarch Park, P.O. Box 9101, Quincy, MA 02269-9101

NEMA-National Electrical Manufacturers Association, 2101 L Street NW., Suite 300, Washington, DC 20037

NESC-National Electrical Safety Code, Institute of Electrical and Electronic Engineers, 445 Hoes Lane, P.O. Box 1331, Piscataway, NJ 08855-1331

NFPA-National Fire Protection Association, One Batterymarch Park, P.O. Box 9101, Quincy, MA 02269

NFOPA-National Forest Products Association, 1619 Massachusetts Avenue NW, Washington, DC 20036

NKCA-National Kitchen Cabinet Association, P.O. Box 6830, Falls Church, VA 22046

NSF-NSF International, P.O. Box 130140, Ann Arbor, MI 48113-0140

OSHA-Occupational Safety and Health Administration, 3rd and Constitution Avenues, Washington, DC 20210

PCA-Portland Cement Association, Old Orchard Road, Skokie, IL 60076

PCI-Precast/Prestressed Concrete Institute, 175 West Jackson Boulevard, Suite 1859, Chicago, IL 60604

PS-Product Standard, U.S. Department of Commerce, Washington, DC 20203

RIS-Redwood Inspection Service, One Lombard Street, San Francisco, CA 94111

SAE-SAE International, 400 Commonwealth Drive, Warrendale, PA 15096-0001

SDI-Steel Deck Institute, P. O. Box 9506, Canton, OH 44711-9506

SJI-Steel Joist Institute, 1205 48th Avenue North, Suite A, Myrtle Beach, SC 29577

SMACNA-Sheet Metal and Air-Conditioning Contractors National Association, Inc., 4201 Lafayette Center Drive, Chantilly, VA 22021

SSPC-Steel Structures Painting Council, 4516 Henry, Pittsburgh, PA 15213

TCA-Tile Council of America, Inc., P. O. Box 326, Princeton, NJ 08542-0326

TPI-Truss Plate Institute, Inc., 583 D'Onofrio Drive, Suite 200, Madison, WI 53719

UBC-Uniform Building Code, International Conference of Building Officials, 5360 South Workman Mill Road, Whittier, CA 90601

UL-Underwriters' Laboratories, Inc., 333 Pfingsten Road, Northbrook, IL 60062

UPC-Uniform Plumbing Code-International Association of Plumbing and Mechanical Officials, 5032 Alhambra Avenue, Los Angeles, CA 90032

WWPA-Western Wood Products Association, 522 SW. 5th Avenue, Yeon Building, Portland,OR 97204-2122

SECTION 1.3--LOCAL CONDITIONS

1.3.1 RIGHTS-OF-WAY:

Western will furnish the right-of-way or site for the work and the right-of-way for access to the work over routes established by Western.

1.3.2 ACCESS TO THE WORK AND HAUL ROUTES:

1. GENERAL: Rights-of-way for access to the work from existing roads will be provided as specified above. Perform work on the rights-of-way necessary for access to the site. Construct and maintain haul roads, access roads, bridges, and drainage structures required for construction operations.

2. INVESTIGATIONS: Investigate the condition and availability of public and private roads and clearances, restrictions, bridge-load limits, bond requirements, and other limitations that may affect transportation and ingress and egress at the job site. Unavailability of transportation facilities or limitations thereon shall not become a basis for claims for damages or extension of time.

3. EXISTING ROADS: Existing roads are available subject to applicable restrictions. Meet conditions imposed upon the use of existing roads by those having jurisdiction, including seasonal environmental and other limitations or restrictions. Pay excess size and weight fees, and post bonds conditioned upon repair of road damage.

4. HAUL ROUTES: Intra job hauling over public highways, roads, and bridges shall be in accordance with applicable local regulations and shall minimize interference with local traffic. Where haul routes cross railroads, public highways or roads, provide barricades, flag persons, and other necessary precautions for safety of the public as required by Section 1.4, "Safety and Health."

1.3.3 USE OF LAND FOR CONSTRUCTION PURPOSES:

1. GOVERNMENT LAND: Government land, controlled by Western, may be used for field offices, storage yards, shops, and other facilities if such use will not interfere with work of other contractors or of the Government in the vicinity, or with reservations made by Western for use of the land. Refer to the contract clause titled "Operations and Storage Areas" for additional requirements. The COR's approval shall be obtained prior to use of Government land.

2. PRIVATE LAND: If private land is used, make necessary arrangements with the owner and pay rentals or other costs.

1.3.4 PROTECTION OF EXISTING INSTALLATIONS:

1. GENERAL: In addition to the contract clause titled "Protection of Existing Vegetation, Structures, Equipment, Utilities, and Improvements," obtain the location of buried conduit, pipe, cable, ground mat, and other buried items prior to performing excavations in the existing installation. Use proper methods for protecting existing installations during excavating and backfilling operations and when installing equipment and material.

   Fences on right-of-way shall be removed where necessary and replaced to the original condition or better when the work is finished.

2. SUBMITTALS: Prior to starting excavation in an energized substation, submit to the COR for approval a cable location plan and print of locations. The plan shall give proposed methods of

locating existing buried cable and include methods of identifying subsurface cable installations within the work area and methods of surface marking of cable locations and lines of excavation. When locating cable, wires shall not be loosened or removed from the terminals, and signals shall not be induced into the control circuit. The substation shall remain operational and the methods used for cable location shall not interfere with operation of the substation. Excavation will not be allowed until cable location has been marked on the ground and the COR has received a marked print showing the cable location.

3. PROTECTIVE INSTALLATIONS: Protective installations shall permit operation of existing equipment and facilities while construction work is in progress. Remove protective installations after they have served their purpose. Material furnished to provide protection shall remain the Contractor's property.

   Where existing fences are removed to facilitate the work, temporary fence protection for lands adjacent to the right-of-way shall be provided at all times during the continuation of the contract. Such temporary fence protection shall be adequate to prevent public access to restricted areas. Temporary fencing constructed on the right-of-way shall be removed by the Contractor as part of the cleanup operations prior to final acceptance of the completed work.

4. CONTRACTOR'S NONCOMPLIANCE: If the Contractor does not provide the necessary fences and gates to adequately protect property adjacent to the right-of-way within a reasonable time after need for such protection arises, Western will have the work performed and back charge the Contractor.

1.3.5 RAILROADS, HIGHWAYS, AND UTILITY LINES:

1. GENERAL: Make necessary provisions and perform work required to avoid interference with the operation or maintenance of railroads, highways, and overhead utility lines, including transmission, telegraph, and telephone lines, in a manner satisfactory to the owners or operators thereof and to Western. If required, furnish liability insurance, indemnity and other bonds, and required permits.

2. PROTECTIVE MEASURES: Provide and maintain required watchmen, signals, guards, and temporary structures in accordance with Section 1.4.2, "Public Safety."

3. STRINGING OVER ENERGIZED POWER LINES: When stringing transmission line conductors or overhead ground wires over energized electric power lines, notify the owners or operators thereof of the period of time required for stringing, and obtain a written acknowledgment of such notice. Present the acknowledgment to the COR before stringing of the crossing span is started. Stringing operations shall conform to the applicable safety and transmission line stringing provisions of Section 1.4, "Safety and Health."

SECTION 1.4--SAFETY AND HEALTH

1.4.1 SAFETY AND HEALTH, GENERAL:

1. GENERAL: In addition to the contract clause titled "Accident Prevention," conduct a Safety and Health Program and take necessary precautions to protect the safety and health of employees and members of the public and to prevent damage to public and private property. Do not allow employees, whether directly employed or employed through subcontract or onsite supply contract, to work in surroundings or under working conditions which are unsanitary, hazardous, or dangerous to their health or safety.

   Western's commitment and policy concerning occupational safety and health is printed on the inside back cover of the project specifications. This statement is incorporated into these standards and shall be incorporated into the Contractor's safety program.

2. CONFLICT IN REQUIREMENTS: If there is a conflict between the requirements of the standards, project specifications, and applicable Federal, State, or local safety, health, or industrial regulations or codes, the more stringent requirements shall prevail.

3. COMPLIANCE WITH CODES AND STANDARDS: Comply with the latest effective Occupational Safety and Health Administration (OSHA) Standards 29 CFR 1910 and 29 CFR 1926 and other applicable Federal, State, and local regulations. In any State where the State OSHA's plan is accepted by the Federal Government, comply with the State OSHA regulations. Keep a copy of applicable OSHA standards at the job site. Certain OSHA standards have been referenced for emphasis. OSHA standards shall apply, whether referenced or not.

4. SUPERINTENDENT QUALIFICATIONS AND RESPONSIBILITIES:

   (1) General:

      1) De-energized Substation Construction: For work in a de-energized substation, the superintendent shall have a minimum of 3 years' experience as a superintendent or foreman in high-voltage substation construction.

      2) Energized Substation Construction: For work in an energized substation, the superintendent shall have a minimum of 3 years experience as a superintendent or foreman in high-voltage substation construction, including 1 year of experience in energized substations.

      3) Transmission Line Construction: The superintendent shall have a minimum of 3 years experience as a superintendent or foreman in high-voltage transmission line construction.

      4) General Construction: The superintendent shall have a minimum of 3 years experience as a superintendent or foreman in the type of construction contained in the project specifications.

      5) OSHA Knowledge: The superintendent shall have demonstrated knowledge of applicable OSHA construction safety standards.

   (2) Superintendent's Resume: The superintendent's resume shall be submitted as part of the Contractor's Safety and Health Program and shall include the following:

      1) Work history relating to above requirements.
      2) Three job-related references.

3) Current first aid and CPR certificates.
4) Listing of safety and health training.

(3) Responsibilities: The superintendent's primary responsibilities shall be to provide oversight and supervision of onsite work activities. Superintendents shall be in a non-work status during work requiring a Hot Line Order, Clearance, or other critical phases of work as determined by the COR.

5. CONTRACTOR'S SAFETY AND HEALTH PROGRAM: Submit six printed copies or one electronic copy of a proposed Safety and Health Program (Program) to the COR for approval at least 10 days prior to start of construction operations. The Contractor will keep one hard copy of the approved Program on-site at all times. On-site construction operations shall not begin until approval of the Program. Approval of the Program, including amendments and supplements thereto, is for the purpose of determining compliance with the standards and project specifications only and shall not relieve the Contractor of the responsibility for the safety and health of persons and property. The Program shall include, but not be limited to, the following:

(1) Designation of the on-site superintendent to carry out the Program. Include superintendent's resume of qualifications and experience in the type of work to be performed and safety and hazard recognition training.

(2) Statement of company Safety and Health Policy encompassing compliance with applicable Federal, State, and local safety standards and the safety and health requirements of the standards and project specifications.

(3) Provision for first aid, medical care of injured employees, and emergency response telephone numbers as required by OSHA 1926.50, "Medical Services and First Aid." For fieldwork involving two or more employees at a work location, at least two trained persons shall be available. For fixed work locations, the number of trained persons available shall be sufficient to enable emergency treatment to begin within four minutes of an accident.

(4) Provision for training employees in the recognition and avoidance of unsafe conditions using methods such as new employee orientation, weekly "tool box" meetings, and job hazard analysis.

(5) Fire protection procedures and facilities, including requirements in OSHA 1926, Subpart F, "Fire Protection and Prevention."

(6) Health and sanitation facilities, including requirements in OSHA 1926.51, "Sanitation."

(7) Procedures for specific sequences of work to ensure adequate activity hazard analysis of hazards and provision of protective measures (e.g., demolition, excavation, structure erection, stringing operations, grounding, working adjacent to energized electrical equipment, etc.).

(8) Provisions for the use and furnishing of personal protective equipment.

(9) Procedures for protecting the public.

(10) Company policy and procedures for enforcing safety and health regulations.

(11) Copy of the current certificate of compliance with industrial compensation insurance statutes.

(12) Procedures as required by OSHA 1926, Subpart D, "Occupational Health and Environmental Controls".

(13) A comprehensive daily inspection program for inspecting tools, equipment, and facilities. The inspection program shall document observed hazards and the corrective actions taken.

(14) Fall protection policy and program identifying hazards and listing equipment and procedures the Contractor is planning on using for this specific project that meets the requirements of OSHA 1910.269. The Contractor has the option of certifying those employees considered to be qualified climbers. A list of qualified climbers shall be provided to the COR. The Contractor shall provide to each employee and inspector who will climb an orientation that will address the following:

1) Climbing with fall protection.
2) Rescue procedures to be used.
3) Certification as a qualified employee for climbing.
4) Fall arrest and protection equipment maintenance and testing.
5) Hazard recognition.

(15) Lockout/Tagout Program: Submit a lockout/tagout program, specific to equipment and circuits being worked on, which complies with the requirements listed in OSHA 1926.417, "Lockout and Tagging of Circuits"; OSHA 1926.957, "Construction in Energized Substations"; and OSHA 1910.269, effective May 31, 1994.

(16) Provision for line-clearance tree trimming operations including requirements in OSHA 1910.266 logging operations and 1910.269(r) Electrical power generation, transmission, and distribution. Include qualifications and certification of training.

6. JOB HAZARD ANALYSIS:

(1) A JHA is a study of a job or activity to identify hazards or potential accidents associated with each step or task, and develop solutions that will eliminate, modify, or prevent such hazards or accidents. For simple tasks, the JHA may be a thought process for a single employee task; it may be a verbal discussion as part of a tailgate safety meeting; or it may be a verbal discussion between a Supervisor and employee when work is assigned.

(2) For complex, high risk tasks, or as directed by the COR, a written Job Hazard Analysis (JHA) shall be prepared by the Supervisor in consultation with the employees. It also may involve second level or higher supervision, as in the case of a separate written work procedure. In all cases, the analysis shall include those participating in the task, and a signature or initials of all participants shall be required.

(3) The JHA shall consist of the following: date; identification of Employee Group(s); location and directions to the work site; Narrative description of work to be accomplished; list of identified hazards and how to minimize or eliminate, including specific personal protective equipment; special instructions or limitations; list of all special equipment and tools; and sequence of steps, or, when required, a detailed step-by-step work procedure.

7. JOINT WESTERN AND CONTRACTOR SAFETY MEETINGS:

(1) Commencement of Construction: Prior to beginning onsite construction, a preconstruction safety meeting will be conducted with the Contractor's supervisory personnel and Western for review of the Contractor's Safety and Health Program.

(2) Management Safety Awareness Meeting: After commencement of construction, the Contractor's management, subcontractor's management, and Western's management shall conduct a management safety awareness meeting, including the Contractor's supervisors and work force. This meeting shall be for the purpose of demonstrating to project personnel that the Contractor and Western are totally committed to providing a safe work place.

Additional meetings will be required as necessary to ensure a majority of employees have participated.

(3) Periodic Joint Safety Meetings: Periodic joint safety meetings with the Contractor's supervisory personnel and Western will be conducted throughout the contract.

8. FAILURE TO COMPLY: Failure to implement, monitor, and enforce the Safety and Health Program and the requirements of the standards and project specifications may result in the Contracting Officer's directed removal of the job superintendent or may result in suspension of work as provided by the contract clause titled "Accident Prevention", or both. Western's failure to order discontinuance of the Contractor's operations shall not relieve the Contractor of responsibility for the safety and health of personnel and property.

9. ACCIDENT RECORDS AND REPORTING: Maintain and furnish accurate records and reports to Western as directed by the COR. Verbal notifications are required immediately, and written reports are required within 48 hours on job-related deaths, occupational diseases, traumatic injuries to employees or the public, and property damage caused by an accident as follows:

(1) Personal Injury/Illness:

1) Job-Related Injuries/Illnesses: Job-related injuries/illnesses to Contractor employees shall be reported to the COR. Injuries/illnesses shall be posted to the OSHA 300 Log and OSHA Form 301 and shall be available for review by the COR.

2) Public Injury: Injuries to the public arising out of this contract shall be reported to the COR.

(2) Equipment and Motor Vehicle Accidents: Work site equipment and motor vehicle accidents, regardless of extent of injury or cost, shall be reported to the COR.

(3) Property Damage: Property damage or loss in excess of $1,000 resulting from any accident shall be reported to the COR. Damage to Government or public property, regardless of cost, shall be reported to the COR.

When requested by the COR, participate in any investigation of accidents or incidents, including near-miss-type incidents.

10. TESTING AND DATA: Prior to onsite use, furnish the COR with copies of certifications, test records, and technical data as follows:

(1) Load performance tests in accordance with Section 1.4.11, "Lifting Devices."

(2) Annual inspections for cranes and aerial lifts shall be performed by a qualified, independent party, accredited by the Crane Certification Association of America, or the manufacturer. Crane annual inspection records shall be in accordance with OSHA 1926.550, “Cranes and Derricks”, and annual inspection reports of aerial lift equipment in accordance with ANSI A92. Copies of the reports and any deficiencies corrected for repairs made since the inspection

was performed shall be provided to the COR. Copies of the reports and certifications shall also be maintained in the lifting device.

(3) Brake performance test in accordance with Section 1.4.10 "Equipment."

(4) Test results of protective ground leads in accordance with Section 1.4.14 "Grounds, Bonds, and Other Protective Devices."

(5) Material safety data sheets (MSDS) for each paint, oil, epoxy, insulating medium, curing compound, herbicide, and other hazardous material.

(6) The manufacturer's load rating for each hoist and grip.

(7) Certification of fabricated mobile lifting devices and field-fabricated rigging devices in accordance with Section 1.4.11 "Lifting Devices."

(8) Medical Examiner's certificate in accordance with Section 1.4.3 "Employee Requirements."

(9) Data for excavation protective system in accordance with Section 1.4.5 "Excavation."

1.4.2 PUBLIC SAFETY:

1. ROADS: Roads subject to interference by the work shall be kept open without unreasonable delays or suitable detours shall be provided and maintained. Protection of the public shall be provided as required by OSHA 1926, Subpart G, "Signs, Signals, and Barricades," and by the public agency having law enforcement jurisdiction for the roadway.

2. RAILROADS: Provide, erect, and maintain barricades, flasher lights, flag persons, danger signals, and signs where access roads and haul routes cross railroads.

1.4.3 EMPLOYEE REQUIREMENTS:

1. GENERAL: Employees shall be qualified to perform their assigned duties. Employees shall not work while their ability or alertness is impaired because of fatigue, illness, medications, drugs or alcohol, or any other reason that may expose them or others to injury.

2. TRAINING: Ensure that each employee entering the work site has experience, training, and, where required, the certification, skills, and knowledge necessary to safely perform their assigned tasks. In addition, ensure each employee receives initial work site safety orientation and continued safety and health training addressing the hazards associated with the work and the measures necessary to control or eliminate the hazards.

3. PHYSICAL EXAMINATION: Each employee who operates the following listed equipment shall be given and pass a Department of Transportation (DOT 49 CFR 391.43) physical examination once every 24 months:

   (1) Cranes.
   (2) Aerial lift equipment.
   (3) Other vehicles as required by Federal and State laws and regulations.

   A copy of the Medical Examiner's certificate shall be furnished to the COR prior to the employee operating the listed equipment. The certificate shall state that the physical examination met the requirements of DOT 49 CFR 391.43.

4. OPERATORS: Employees operating motor vehicles and other equipment shall be licensed in accordance with applicable Federal and State laws and regulations.

   Provide the COR with assurance of competency of employees operating cranes, aerial lift equipment, heavy equipment, and other motor vehicles by documentation of their experience, training, and licensing. Qualified operators must meet ASME B30.5 (OSHA Ref. 29 CFR 1926.550).

5. QUALIFIED CLIMBER: For substation and transmission line construction, the Contractor may use qualified employees for climbing duties as defined by OSHA 1910.269. Employee's qualifications shall be available upon request by the COR. Qualified employees with climbing duties shall be subject to the following requirements:

   (1) Climbing duties are part of routine job activity.

   (2) Documented training and experience that includes hazard recognition and appropriate safe climbing practices and rescue training.

   (3) Demonstrated experience within the past 12 months on similar structure types to be climbed.

1.4.4 PERSONAL PROTECTIVE EQUIPMENT:

1. GENERAL: Identify the need for personal protective equipment in work activities and require wearing of appropriate personal protective equipment in accordance with OSHA requirements and the following requirements.

2. MINIMUM WEARING APPAREL: Employees shall wear, as a minimum, full-length pants, short sleeve or T-shirt, and above-the-ankle leather work boots.

3. HARD HATS: Employees entering the area where construction work is in progress, with the exception of the parking area and the interior of shops and offices, shall wear hard hats. Provide hard hats for visitors entering hard hat areas. "Hard Hat Area" signs shall be furnished and erected.

4. HIGH-VISIBILITY CLOTHING: Personnel working on the ground on or near public thoroughfares, personnel working in areas open to big game hunting, and flag persons shall wear safety color fluorescent clothing with a reflective area of at least 400 square inches above the waist.

5. FALL PREVENTION SYSTEMS AND FALL ARRESTING DEVICES: Fall arresting systems shall incorporate full body harness in conjunction with shock absorbing or retractable lanyards. Lanyards shall be equipped with double locking snaphooks or carabiners.

   (1) Substations, Transmission Lines, and Microwave Towers: Positioning straps and fall arresting devices shall be worn and used in accordance with OSHA 1926.951(b) during construction of electric transmission and distribution lines, substations, and microwave towers. Climbing procedures that do not provide positive fall protection while aloft (e.g., unhooking of a single shock absorbing or retractable lanyard while moving from one work position to another, freehand climbing of structure step bolts while unbelted, etc.) are not acceptable. Positive protection shall be provided via the use of shock absorbing lanyards, retractable lanyards, shock absorbing "Y" lanyards, or other approved methods. Provide positive fall protection when more than four feet above a lower level while climbing, moving, and working on structures and on fixed electrical equipment in substations. Using bushings on substation equipment for anchorage or climbing will not be allowed.

Attachment is optional for qualified climbers only for the following situations:

1) On wood pole structures, when climbing with the aid of a body belt and safety strap for positioning. Attachment via a fall prevention system is required when transitioning crossarms (vertically and horizontally) and multiple stacked pole bands, and upon reaching the work location.

2) To ascend/descend structures using devices designed for safe climbing such as step bolts and ladders. Existing safe climbing devices involving attachment, such as T-rail systems, shall be used by all climbers.

3) When moving horizontally between work locations on steel lattice transmission line structures, three-point contact is required.

4) When a hazard analysis (prepared by the work supervisor, in consultation with the employees and Western's onsite construction representative, and approved by a second level supervisor) determines that a protected procedure would create a greater hazard than "free-climbing" practices.

(2) Building Construction and Roofing: Except where OSHA 1926 specifies a lower height, provide positive fall protection when more than 10 feet above a lower level while climbing, moving, and working. Body belts are not acceptable for fall protection. On low sloped roofs of 50 feet or less in width, the use of a monitoring system alone is not acceptable.

(3) Aerial Work Devices: Fall arresting systems shall be worn and used when in aerial work devices. Transitioning to a structure will only be allowed if the aerial work device has a door, step, or ladder designed for that purpose. The lanyard shall be unhooked from the work device and attached to the structure prior to transitioning.

6. SCAFFOLDING: Scaffolding shall be in accordance with OSHA 1926, Subpart L, "Scaffolding". Scaffolds shall be used in lieu of ladders for long-term work procedures.

7. LADDERS: Ladders shall be in accordance with OSHA 1926, Subpart X, "Stairways and Ladders," and the following:

(1) Suspended Ladders: Provide positive fall protection when climbing, moving, or working on suspended ladders.

(2) Ladders of Conductive Material: Ladders with side rails constructed of conductive material shall not be used in substations or on transmission lines.

(3) Ladder Stability: Ladders, except stepladders, shall be held or tied off when being climbed, when being worked from, or when a worker is getting on or off at an elevated position.

(4) Ladder Rungs: Ladder rungs shall have skid-resistant surfaces and shall be maintained as such.

8. RESPIRATORY PROTECTION: Provide a respirator program that meets the requirements of OSHA 1926.103, "Respiratory Protection," and OSHA 1910.134, "Respiratory Protection." Employees exposed to airborne contaminants shall wear respirators. Examples of contaminants include, but are not limited to, asbestos, fumes released by welding and cutting on galvanized steel, and fiberglass insulation.

A copy of the program required by OSHA 1910.134(b)(1) through 1910.134(b)(11) shall be submitted prior to use of chemicals or processes requiring respiratory protection, such as sandblasting, etc.

9. CHEMICAL PROTECTION EQUIPMENT: When exposed to chemicals or hazardous materials, employees shall wear personal protective equipment such as full face shield, chemical splash goggles, impermeable gloves and boots, disposable coveralls or impermeable clothing, respirators, and any other items recommended by the MSDS or label instructions. If impermeable clothing required for chemical application becomes contaminated on the inside, it shall be disposed of and not returned to service.

10. PROTECTIVE CHAPS: When using chain saws, protective chain saw chaps shall be worn. Chaps shall be constructed of four layers of Kevlar or ballistic nylon.

11. FOOT PROTECTION DURING CHAIN SAW USE: Use boots made with material (such as layered Kevlar) capable of meeting ASTM standard F1818 (Standard Specification for Foot Protection for Chain Saw Users).

1.4.5 EXCAVATION:

1. BURIED UTILITIES: Prior to excavation, examine the area and determine the location of buried utilities as required by OSHA 1926.651, "General Requirements," subparagraph (b). Utilities shall be identified with a marker denoting the type of service.

2. METHOD OF CABLE LOCATION: Prior to starting excavation in an energized substation, submit a plan to the COR, for approval giving proposed methods of locating existing buried cable. The plan shall include methods of identifying subsurface cable locations within the work area, and methods of surface marking of cable locations and lines of excavation. When locating control cable, wires shall not be loosened or removed from the terminals and signals shall not be induced into the control circuit. The substation shall remain operational and methods used for cable location shall not interfere with operation of the substation. Excavation will not be allowed until cable location has been marked on the ground and the COR has received a marked print showing the cable location.

   Hand dig to confirm the location and identities of the cable. Before digging in an existing substation, review as built drawings, cable trenches, any equipment not shown on the drawings, and terminal box inlets to identify any cables that may not be shown on a drawing.

   For work in an energized substation, have a cable locator onsite. Cable and magnetic locator equal to Model MAC-51B, as manufactured by Schonstedt Instrument Company, 1775 Wiehle Avenue, Reston, VA 22090, telephone (703) 471-1050.

3. UNATTENDED EXCAVATION: Protection of unattended excavations shall be as required by OSHA 1926, 501(b)(7)(ii).

4. EQUIPMENT ACCESS: Precautions shall be taken to prevent slides or cave-ins when excavations or trenches are made in locations adjacent to backfilled excavations, or where excavations are subjected to vibrations from adjacent traffic, the operation of equipment, or any other source. A spotter shall assist operators of trucks and equipment when adjacent to excavations as required by OSHA 1926.601, "Motor Vehicles."

5. EMPLOYEE PROTECTION: Protection of employees entering excavations shall be as required by OSHA 1926.651, "General Requirements," and OSHA 1926.652, "Requirements for Protective Systems." Select the protective system appropriate for the excavation and submit data relevant to

selection of the protective system, including soil classification, qualifications for competent person, and any other data listed in OSHA 1926.652, "Requirements for Protective Systems."

1.4.6 EXPLOSIVES AND BLASTING:

1. GENERAL: Transportation, handling, storage, and use of explosives shall comply with OSHA 1926, Subpart U, "Blasting and the Use of Explosives." Blasting will be permitted only after adequate provisions have been made for the protection of persons, the work, and public or private property. Blasting shall be done between sunrise and sunset. Repair blasting damage to the work and public or private property.

2. BLASTING PLANS:

   (1) General: Submit three copies of a blasting plan to the COR for approval. No blasting activity shall begin prior to approval of the blasting plan and submission of individual shot plans.

   (2) Blasting Plan: Plan shall detail the Contractor's proposals for compliance with this section and shall detail the general concepts proposed to achieve the desired excavations using individual shot plans. In addition, the plan shall address proposed methods for controlling fly rock, for blasting warnings, and for use of electrical blasting systems. Provide data to support the adequacy of the proposed efforts regarding the safety of structures and slopes and to assure that an adequate foundation is obtained.

   (3) Shot Plans: Shot plans shall detail, including sketches, the drilling and blasting procedures; the number, location, diameter, and inclination of drill holes; the amount, type, and distribution of explosive per hole and delay; and pounds of explosive per square foot for pre-splitting and smooth blasting.

3. EXPLOSIVES: Explosive logs shall be available for review by the COR.

4. DRILLING DUST CONTROL: When drilling control the dust within safe hygienic limits as required by OSHA 1926.55, "Gases, Vapors, Fumes, Dusts, and Mists."

5. VIBRATION AND DAMAGE CONTROL: Blasting in the vicinity of buildings, structures, and other facilities susceptible to vibration or air blast damage shall be carefully planned and controlled to eliminate possibility of damage to such facilities and structures. Include in blasting plan provisions for control to eliminate vibration and air blast damage.

6. BLASTER CERTIFICATION: Blasters shall be qualified as required by OSHA 1926.901, "Blaster's Qualifications". In States having jurisdiction for enforcement and requirements for formal certification or licensing blasters and explosives purchasers, comply fully with those requirements. The blasting plan shall contain documentation of the blaster's certifications, qualifications, and experience.

1.4.7 MATERIAL HANDLING AND STORAGE:

1. GENERAL: Material handling and storage shall be as required by OSHA 1926, Subpart H, "Materials Handling, Storage, Use, and Disposal," and OSHA 1926, Subpart V, "Power Transmission and Distribution." Stack heavy material on adequate lagging to prevent shifting. Cylindrical-shaped material such as poles and pipe shall be handled with extra caution to prevent unplanned movement.

2. CRITICAL LIFTS: The contractor shall prepare a written plan for critical lifts. All personnel involved with the lift shall review and sign the Critical Lift Plan.

A critical lift is defined as a lift requiring detailed planning and additional safety precautions, including:

(1) Lifts being made under a hotline order next to energized conductors.

(2) Lifts made when the load is 75% or more than the rated capacity of the crane or hoisting device.

(3) When crane supported personal platforms are being used.

(4) Any lift the operator or COR believes critical.

The plan shall include, but not be limited to:

(1) Exact size and weight of the load, including the crane and rigging components.

(2) Exact information about the sequence of the lift.

(3) Rigging plans with lift points and hardware requirements.

1.4.8 STRUCTURE ERECTION:

1. GENERAL: Procedures for erecting structures shall be made a part of the Safety and Health Program. The structure erection plan shall include, but not be limited to, the following subjects: assembly, lifting, shoring, size and type of hoisting equipment, operator qualifications, crane signal/communication, connecting rigging, guying, moving equipment, and protection for adjacent energized power facilities.

   Structure and building assembly and erection shall be conducted with a minimum exposure to employees from overhead loads and work activities. No one shall be permitted under the load while it is being hoisted into position, except as required to secure the load being set. No one shall be allowed to ride the hook, line, or load.

2. COMMUNICATION: A two-way radio device shall be used to relay information between the spotter and the crane operator when vision is obstructed.

3. TEMPORARY STRUCTURE SUPPORT: Structures shall have adequate temporary guy cables or other structural support during erection procedures. Temporary structure support shall be approved by a registered Professional Engineer. Temporary guys or structural supports shall remain in place until the permanent guys or structural supports are in place.

4. TOOLS: Tools and material shall not be thrown or dropped from structures. Handlines and tool bags shall be used.

1.4.9 ELECTRICAL MINIMUM APPROACH DISTANCE:

Equipment, conductive objects, and personnel shall not be brought closer to energized high-voltage facilities (600 V or greater) than the distances listed in the applicable parts of OSHA 1910 and 1926 as listed below. Adequate means of preventing violations of the electrical minimum approach distances shall be used, such as spotters and equipment stops.

As a general requirement, equipment, conductive objects, or personnel shall not be brought closer to energized facilities than the electrical minimum approach distances established by OSHA 1926.550,

"Cranes and Derricks." The less stringent equipment clearance distances established by OSHA 1926.950, "General Requirements, Table V-1," may be used only when approved in writing by the COR.

A notice of the electrical minimum approach distance limitations required by OSHA 1926.550, "Cranes and Derricks" shall be permanently posted in the operator's cab of cranes, shovels, backhoes, and related equipment.

1.4.10 EQUIPMENT:

1. GENERAL: Equipment shall be designed, manufactured, maintained, and operated as required by OSHA 1926 and OSHA 1910 and the requirements contained in this section. Equipment shall be used only for the manufacturer's intended purpose.

   (1) Riding on Equipment: Riding on equipment is prohibited unless a safe place to ride is provided. A safe place to ride is defined as a permanently affixed seat with passenger restraint device. Getting on or off equipment while in motion is prohibited.

   (2) Brakes: When directed by the COR and when otherwise required, carry out a braking performance test on onsite equipment. Test shall be conducted in the presence of the COR and recorded on the form prescribed by the COR.

2. ROLLOVER PROTECTIVE STRUCTURES AND SEAT BELTS: Equipment defined by OSHA 1926.1000, "Rollover Protective Structures (ROPS) for Material Handling Equipment," shall be equipped with rollover protective structures (ROPS) meeting the performance requirements of OSHA 1926.1001, "Minimum Performance Criteria for Rollover Protective Structures for Designated Scrapers, Loaders, Dozers, Graders, and Crawler Tractors." Equipment defined by OSHA 1926.602, "Material Handling Equipment," shall be equipped with seat belts in accordance with the requirements of that section. Agricultural, industrial tractors, and off-road utility vehicles shall be equipped with the ROPS and seat belts, regardless of date of manufacture. Seat belts shall be worn when operating equipment that is required to be equipped with seat belts.

1.4.11 LIFTING DEVICES:

1. GENERAL: Lifting devices shall be designed and manufactured or fabricated for their intended use and shall conform to applicable ANSI standards; OSHA 1910, Subpart N, "Materials Handling and Storage"; OSHA 1926, Subpart N, "Cranes, Derricks, Hoists, Elevators, and Conveyors"; and the requirements of this section.

2. MOBILE CRANES: Crawler, truck, and wheel-mounted cranes shall conform to applicable requirements for design, inspection, construction, testing, maintenance, and operation as prescribed in ANSI B30. The exception in the last sentence of B30.15-0.1 shall not apply. Submit annual inspection records to the COR in accordance with ANSI B30.

3. AERIAL WORK DEVICES: Aerial work devices used to raise, shift, and lower personnel shall conform to applicable requirements for design, inspection, construction, testing, maintenance, and operation as prescribed by ANSI A92, regardless of date of manufacture. Submit annual inspection records to the COR in accordance with the applicable ANSI standard.

4. FORKLIFTS AS ELEVATED PLATFORMS: Forklifts used as elevated platforms will be subject to approval of the COR for each application. Forklifts and platforms will conform to B56.1.

5. WORK PLATFORMS: Work platforms suspended from crane load lines will be subject to the approval of the COR for each application. The design, use, and testing of the work platforms shall be in accordance with OSHA 1926.550, "Cranes and Derricks."

6. FABRICATED MOBILE LIFTING DEVICES: Fabricated mobile lifting devices such as truck-mounted A-frames, gin poles, and similar equipment shall be designed, constructed, and certified based on the determinations of a registered Professional Engineer competent in this field. A written contract specific certification shall be provided to the COR. Design capacity shall be posted at the operator's station.

7. LOAD PERFORMANCE TEST: Prior to initial use and following modification, alteration, or repair of any component, load test mobile cranes and fabricated mobile lifting devices at the job site and in the presence of the COR. Provide test results on forms supplied by Western. Load test shall involve lifting, swinging, and brake holding a load of 100 percent of the load chart rating for a specific configuration and load radius. Configuration, load radius, and test weight shall be chosen to prove the machine's capability and load chart accuracy for its anticipated use. Configuration shall provide a boom angle of at least 30 degrees above the horizontal.

8. REPAIRS: Repairs shall be in strict compliance with manufacturer's instructions. The manufacturer or a registered Professional Engineer shall certify repairs to structural load carrying parts competent in structural analysis. Submit certification to the COR.

9. RIGGING:

   (1) General: The handling, use, and inspection of rigging shall be in accordance with OSHA 1926.251, "Rigging Equipment for Material Handling."

   (2) Rigging Selection and Analysis: Analyze the requirements and select the rigging equipment appropriate for the load based upon thorough analysis of load data, rated capacities, and manufacturer's recommendations. A copy of the analysis and selection of equipment shall be submitted to the COR.

   (3) Field-Fabricated Devices: The design of field-fabricated rigging equipment and devices shall be certified by a registered Professional Engineer.

10. UNKNOWN LOADS: When lifting an unknown load or a load that cannot be calculated, a load indicating device shall be used.

1.4.12 CONDUCTOR OR OVERHEAD GROUND WIRE SUSPENDED WORK CARTS:

The use of work carts suspended from conductors or overhead ground wires will be subject to the approval of the COR for each application. A detailed work procedure shall be submitted for approval by the COR that, as a minimum, addresses the following:

1. DESIGN: Work cart design or modifications shall be certified by a registered Professional Engineer or the manufacturer. Cart capacity will be clearly displayed on the cart exterior. Cart design shall be such that no single component failure will separate cart from conductor or overhead ground wires.

2. HOISTING AND INSTALLING: Method of hoisting and installing the cart on the conductor and procedure for powering the cart along the conductor.

3. EXISTING FACILITIES: Prior to working on existing facilities, evaluate the condition of existing structures, conductors, suspension hardware, and overhead ground wires.

   Fall protection procedures that will be used.

The use of work carts will be approved only when less hazardous methods of performing the work are not feasible.

1.4.13 HELICOPTERS:

1. GENERAL: Helicopter operations shall conform to applicable FAA standards contained in 14 CFR 91, 133, and 135 and OSHA 1926.551, "Helicopters." Prior to starting an operation, submit six copies of a written operations and safety program to the COR for review and approval at least 15 days prior to start of helicopter operations. Replacement of a pilot or helicopter will be allowed only after the existing program has been revised, submitted for approval, and approved by the COR. Helicopter operations will not be allowed until the revised program has been approved.

2. PROGRAM REQUIREMENTS: Program submittals shall include copies of the following:

   (1) Affidavit signed by the chief pilot of the helicopter operator certifying credentials of pilot for the work to be performed addressing the following:

      1) Evidence (e.g., pilot's log, resume, etc.) of experience in class load, make, and model of aircraft, including affidavit certifying currency of training in aircraft make and model. Training must have included emergency procedures, weight and balance computations, performance charts, and training in the approved flight manual.

      2) If the pilot is not experienced in class load, make, and model, provide onsite training and supervision by the chief pilot until the pilot has demonstrated that they can perform the work safely. Minimum training period shall be at least 10 flying hours.

   (2) Affidavit signed by the helicopter operator certifying compliance with 14 CFR 91, Subpart E, and possession of current:

      1) Airworthiness certificate.
      2) Aircraft registration.
      3) Radio station license.
      4) Current weight and balance.
      5) Operator's manual.

   (3) Job hazard analyses shall be submitted for procedures addressing the following concerns:

      1) Emergency procedures.

      2) Communications between pilot and ground.

      3) Hazards involved in rigging components between the helicopter and any external loads (e.g., "weak link") in Class C loads, etc.

      4) Hazards involving aircraft flight attitudes.

      5) Hazards for load combinations that require hot-line crossings.

      6) Static electricity discharge.

      7) An evaluation of the selection of the wire stringing direction that has considered direction of prevailing winds, relationship to adjacent lines, terrain, or other hazard factors.

(4) In addition, a job hazard analysis shall be performed and procedures established and submitted for those tasks identified as high risk or of a recurring nature--e.g., installing spacers, travelers, marker balls, conductor repair, etc., from the helicopter skid; Class B loads--e.g., hanging ladders, travelers, steel tower erection, concrete placement, etc.; Class C loads--e.g., sockline and overhead ground wire stringing, center phase pass through, "needle" stringing for center phase, tower catch off of sockline or overhead ground wire, etc. These are examples of tasks requiring development and submittal of a job hazard analysis.

(5) External Load Operations:

1) A spotter shall be utilized during stringing operations to observe and warn the pilot of impending hazards during tower threading operations.

1.4.14 GROUNDS, BONDS, AND OTHER PROTECTIVE DEVICES:

1. GENERAL: Electrical circuits, equipment, and conductors; construction equipment; and other conductive apparatus used in proximity of energized facilities shall be considered an electrical hazard to personnel and shall be considered energized until grounded in an approved manner. No work shall be performed on energized equipment and circuits.

2. DEFINITIONS: The following definitions of terms apply to the protection of personnel from electrical shock:

(1) Approved Ground: Approved grounds shall be as follows:

1) A station ground mat.

2) An installed structure or electrical equipment ground.

3) 5/8-inch-diameter copperweld or galvanized rod driven or screwed to a depth of at least 5 feet. If a rod cannot be installed to a depth of 5 feet, install additional rods such that a total of at least 5 feet of rod is buried. Bond these rods together with grounding cables of adequate size based on maximum fault current.

4) In parallel conditions, or when energized lines are being crossed, ground rods shall be driven until the total resistance, between the grounding system and remote earth, falls below 50 ohms. If the grounding system does not result in less than 50 ohms, ground rods shall be driven until the reduction in worksite resistance is less than 10 ohms. Ground impedance shall be measured in accordance with IEEE Standard 81.

(2) Hot-Stick: A hot-stick is a nonconductive tool designed, certified, and approved by the manufacturer for the installation of protective ground leads in accordance with OSHA 1926.951, "Tools and Protective Equipment". Wood hot-sticks shall not be used.

(3) Protective Ground Leads: Protective ground leads (protective ground cable assemblies) are those utilized for grounding electrical apparatus and construction equipment. Protective ground leads shall be a minimum No. 1/0 AWG extra-flexible copper or equivalent. Some areas of work may require protective ground leads with greater current-carrying capacity than No. 1/0 AWG due to available fault current.

(4) Ground leads shall be sized to handle the available fault current in accordance with ASTM Standard F855. When the fault current capability at a specific location exceeds the capacity of the standard grounding set, two or more sets of grounds of the same size and approximate length shall be used. The cables shall be placed as close together as possible to minimize

coupling, and a fault current capability derating factor of 0.9 shall be used for each cable. Multiple cables shall be bound or twisted together to maximize the current carrying capacity of the cable set. Protective ground leads shall be constructed with commercial connectors installed in accordance with manufacturer's instructions.

(5) Protective Ground Lead Connector: A protective ground lead connector is one designed for installation with an insulated hot-stick. A hot-stick may be an integral part of the connector, or the connector may be designed for use with a universal or utility-type hot-stick. Connectors shall be the self-cleaning clamp type and shall have a current-carrying capacity equal to the capacity of the protective ground lead.

(6) Grounding: Grounding is electrically connecting a conductive object to an approved ground with a protective ground lead.

(7) Bonding: Bonding is electrically connecting a conductive object to other conductive objects with a protective ground lead.

(8) Drag-Chain Ground Lead: A drag-chain ground lead is a steel or a steel alloy chain securely bolted to the chassis of rubber tired mobile construction equipment. Chain shall have links at least 1 inch in length, and the overall chain length shall be sufficient to provide 1 foot of ground contact when the equipment is not moving. A drag chain is allowable only when no other ground lead is feasible and equipment grounding is required.

(9) Three-Phase Grounded Short: Three-phase grounded short means bonding three phases of an electrical circuit and connecting to a common approved ground.

(10) Barricades: A barricade is a highly visible physical obstruction intended to warn and limit access to a hazardous area. Construct barricades of high-visibility, weather-resistant material such as yellow 1 1/2-inch plastic tape or yellow synthetic fiber rope. Support barricades to avoid displacement and to maintain a height of approximately 42 inches above walking surface. Locate barricades in such a manner that persons obeying the barricade are restricted from contacting conductive objects within the barricade.

(11) Barriers: A barrier is a physical obstruction which is intended to prevent contact with energized lines or equipment and to physically prevent access to other hazardous areas. Barriers are intended to physically prevent children and livestock from entering an area and make the existence of a hazard apparent other persons. Fence-type barriers shall be at least 48 inches high and supported to prevent displacement. Supports shall be constructed and located so as to not enhance climbing. If constructed of conductive material, the barrier shall be connected to an approved ground with a protective ground lead. Signs shall be placed on the barrier and shall be 10 inches x 14 inches in size, visible from any direction, and read "Danger High Voltage."

(12) Grounded Travelers: Grounded travelers are stringing sheaves or blocks used to make electrical ground connection to conductors and conductive pulling lines. They shall be designed and constructed for this purpose. Western requires the use of grounded travelers that incorporate a separate spring-tensioned sheave to provide the contact surface. Grounded travelers shall not be used or considered as a personal protective ground.

(13) Isolation Platform: An isolation platform is a working or walking surface used to prevent personnel from contacting two conductive objects or a conductive object and the ground simultaneously. Isolation platforms shall be constructed of plastic or fiberglass, shall be at least 5 inches in height, have 9 square feet of working surface, and shall be able to support dynamic loads up to 4,000 pounds. Wood platforms will not be allowed. Isolation platforms

shall be maintained free of dirt, dust, and contamination. When used on wet or soft ground, additional supports shall be provided to ensure the entire platform stays above the ground surface.

(14) Electrical Insulating Boots: Electrical insulating boots shall not be used as a primary means of electrical protection unless other methods of performing the work are not feasible and they have been approved by the COR. If used as secondary protection, boots shall be dielectric rubber boots with an electrical insulation value equal to or greater than 18-kV as tested in accordance with ANSI Z41.4. A program shall be developed and implemented requiring daily inspection of the boots, the testing of the insulating property of the boots on a regular basis, boot replacement criteria, and the instruction of workers on the care and use of the boots.

(15) Grounded Work Mat: A grounded work mat is a working or walking surface used to eliminate step potentials in a work area. The mat may be constructed of woven wire fencing or concrete reinforcing mesh and shall be grounded to an approved ground within 10 feet of the mat. Access to the mat shall be accomplished with an isolation platform and barriers or barricades as required shall be installed.

3. TESTING AND CERTIFICATION:

(1) Protective Ground Leads: Each protective ground lead shall have a permanent identification tag with unique identification number, certified wire size, and test date. Each protective ground lead shall be tested complete with connectors, in accordance with ASTM F 2249. Protective ground leads shall be retested and recertified annually. A protective ground lead without an identification tag to relate it to the annual certification of that protective ground lead shall not be used. Test results shall be submitted to the COR for approval prior to use of the grounds. The test report, Table 1-1, shall include the test method used, measured results, and be signed by the person performing the test.

Personal Protective Grounds Test Report

Project Title _____

Contract No. _____

Test Equipment & Method

TABLE 1-1 PERSONAL PROTECTIVE GROUNDS TEST REPORT

Cable ID Number	Copper Cable Wire Size	Cable Length	Test Voltage	Test Current	Resistance

Tester's Signature _____

Test Date _____

Withstand ratings for reference (ASTM Standard F855):

1/0 AWG copper	21,000 amperes for 15 cycles or 15,000 amperes for 30 cycles
2/0 AWG copper	27,000 amperes for 15 cycles or 20,000 amperes for 30 cycles
3/0 AWG copper	34,000 amperes for 15 cycles or 25,000 amperes for 30 cycles
4/0 AWG copper	43,000 amperes for 15 cycles or 30,000 amperes for 30 cycles
250 kcmil copper	54,000 amperes for 15 cycles or 39,000 amperes for 30 cycles
350 kcmil copper	74,000 amperes for 15 cycles or 54,000 amperes for 30 cycles

(2) Grounded Travelers: Grounded travelers with a separate spring-tensioned sheave shall be designed, installed, and tested to provide 1 ohm or less resistance between the moving conductor and the protective ground lead connection. Tests shall be performed at the work site in the presence of a Western representative before initial use of grounded travelers. Periodic retesting shall be performed as requested by the COR.

4. INSTALLATION AND REMOVAL OF PROTECTIVE GROUND LEADS: Installation and removal of protective ground leads shall be in accordance with OSHA 1926.954, "Grounding for Protection of Employees." While applying or removing the hot end of the personal protective grounds, workers shall not be in contact with the ground cable.

1.4.15 CLEARANCES, HOT LINE ORDERS, AND SPECIAL WORK PERMITS:

1. GENERAL: Secure information concerning which facilities are energized at or near each work site. Take precautions for the safety of personnel, and keep employees fully informed of the work situation and safe work limits. Information concerning Western facilities or other facilities under the operational control of Western shall be obtained from the COR.

2. DEFINITIONS:

(1) Clearance: Clearance is a procedure whereby energized electrical facilities are de-energized; and switches, disconnects, and circuit breakers are tagged or locked to prevent re-energization.

(2) Hot Line Order: Hot Line Order is a procedure whereby adjacent electrical facilities may remain energized during Contractor operations, but provides that if any circuit breaker connected to the facility opens under fault conditions, it will not be reclosed until employees and equipment working in the area are determined to be in the clear.

(3) Special Work Permit: Written permit issued by Western's inspector which indicates the limits of the work areas, restrictions, and conditions pertinent to the work. It is issued to the Contractor's authorized representative for Contractor activities on or near facilities under the operational control of Western. The Contractor's authorized representative shall be the superintendent or other supervisors designated by the superintendent in writing.

3. PROCEDURES TO OBTAIN CLEARANCES AND HOT LINE ORDERS:

(1) Clearance and Hot Line Order requests shall be made in writing to the COR at least 10 working days prior to the anticipated work. Special Work Permit requests shall be made in writing at least 10 working days prior to the anticipated work. Request shall include the plan of operation indicating the Contractor's authorized representative under whose direction the work will be performed, the work to be done, sequence of operations, time to start work, duration of work, number of employees and their classifications, safety precautions to be

taken, type and location of barricades, warning signs, protective grounds, and description of equipment to be used in performing the work.

(2) Following approval of the Contractor's plan of operation, and after obtaining a Clearance or Hot Line Order, Western's inspector will issue a Special Work Permit to the Contractor's authorized representative.

4. SPECIAL WORK PERMIT PROCEDURES:

(1) Special Work Permit will indicate the limits of the work area, restrictions and conditions pertinent to the work including Clearance or Hot Line Order, or both issued by Western. Both the Contractor's authorized representative and Western's inspector shall sign the Special Work Permit and each retain a copy. The Contractor's authorized representative shall remain onsite when work is being performed under a Clearance or Hot Line Order.

(2) Review the Special Work Permit and limits of the work area with employees before proceeding with the work, and as frequently thereafter as necessary to ensure that employees are knowledgeable of the work program and the required safety precautions.

(3) After receipt of a Special Work Permit for a Clearance and prior to commencement of any work, install 3-phase grounded shorts in the following sequence.

1) Using a hot-stick of sufficient length to maintain the electrical minimum approach distance contained in Table V-1 of OSHA 1926, Subpart V, "Power Transmission and Distribution," test the circuit to ascertain it is de-energized. The voltage detector shall be able to measure and display primary and induced voltages, and shall be equal to model number VDAH300 manufactured by The White Rubber Corporation, 835 Cleveland Road, P.O. Box 230, Ravenna OH 44266.

2) Install the protective ground leads by first attaching the leads to the approved ground.

3) Attach the protective ground leads to the de-energized circuit with a hot-stick maintaining electrical minimum approach distances contained in Table V-1 until ground leads are attached. This electrical minimum approach distance requirement shall be maintained between parts of the workman's body and the protective ground lead being attached.

4) Document location of protective ground leads on the Special Work Permit.

Additional grounding may be required depending on type and location of work being performed.

5. PROCEDURES FOR RELEASE OF A SPECIAL WORK PERMIT: After the work has been completed, advise Western's inspector and the following will occur:

(1) Western's inspector will check to determine that the equipment installed or modified is satisfactory for normal service or energization, or is in safe condition for the action to be released.

(2) Remove protective ground leads, bonds, and other protective devices in the reverse procedure specified in Section 4.(3) above.

(3) The Contractor's authorized representative holding the Special Work Permit shall sign both copies of the release of the Special Work Permit certifying that personnel and equipment are

in the clear, and will remain in the clear, and that protective ground leads, bonds, and protective devices have been removed.

6. TRANSFER OF RESPONSIBILITY FOR SPECIAL WORK PERMIT: If necessary to transfer responsibility for work under a Special Work Permit from one Contractor's authorized representative to another, the following shall occur:

   (1) A new Special Work Permit will be issued to the Contractor's new authorized representative by Western's inspector with an explanation of the limits of the work defined thereon.

   (2) Western's inspector and the Contractor's new authorized representative will review the location and integrity of protective ground leads, bonds, and other protective devices.

   (3) The old Special Work Permit will then be released.

1.4.16 SUBSTATION SAFETY:

1. GENERAL: In addition to the requirements contained in OSHA 1926, Subpart V, "Power Transmission and Distribution," and other applicable OSHA requirements, the requirements contained in this section apply.

2. SUPERVISION AND AUTHORIZATION: Work shall be performed under the immediate supervision of the Contractor's superintendent. No work shall be performed in or near an energized facility that is under the operational control of Western until authorization to proceed and a Special Work Permit is obtained from Western's inspector, when appropriate.

   Provide documentation of obtaining protection and permission before performing any work on or near any electrical facility under the operational control of a non-Western agency or utility.

3. RESTRICTED AREAS: Areas of the substation other than de-energized areas and access ways specifically designated by Western's inspector shall be considered restricted areas and shall be barricaded. The Contractor's employees shall not enter a restricted area.

4. ELECTRICAL EQUIPMENT CONTAINING SF_6:

   (1) General: The SF_6 insulating gas in electrical equipment poses a potential health problem to exposed employees. In its pure state, SF_6 gas is about five times heavier than air and is a simple asphyxiate. Electrical arcing can cause SF_6 gas to separate into chemical components. When the arc is removed, the chemical components will recombine to form SF_6 gas but may leave extremely hazardous by-products. It is imperative to avoid skin contact with, inhalation of, and ingestion of these by-products. The solid portions of these by-products are usually in the form of a white or gray powder which may be found on the interior of gas confinement areas of the equipment.

   (2) Instructions and Standards: Prior to opening the SF_6 gas containment areas of the equipment, employees shall be informed of the pertinent sections of the MSDS for SF_6 gas and the manufacturer's instructions for equipment disassembly. Manufacturer's instructions on opening up the electrical equipment containing SF_6 gas shall be followed to prevent accidents from sudden release of high-pressure gas. Comply with OSHA 1926.21, "Safety, Training, and Education," subparagraph (b)(6), for confined space entry where employees must enter the electrical equipment.

   (3) Protective Equipment: Because of the danger to employees of SF_6 by-products, do not open any piece of electrical equipment containing SF_6 gas which has been exposed to electrical

arcing unless the employees involved are protected with the equipment listed below. The protective equipment as specified in the MSDS and as listed below shall be worn until a thorough examination reveals that no SF_6 by-products are present.

1) Either self-contained breathing apparatus or airline respirators supplying breathing quality air.

2) Chemical safety goggles if eyes are not protected by the above mask.

3) Impermeable gloves.

4) Disposable coveralls.

(4) Portable Eye Wash/Shower: A portable eye wash capable of 15 minutes of flushing at .4 gpm shall be located within 20 feet for emergency decontamination of employees.

(5) Disposal of SF_6 By-Products: Disposal of SF_6 by-products shall be in accordance with Federal, State, and local regulations. Certificates of disposal shall be provided to the COR.

5. ADDITIONAL REQUIREMENTS:

(1) Control Panels: Work on energized control panels shall be in accordance with OSHA 1926.957, "Construction in Energized Substations", and shall include the use of accident prevention tags.

(2) Substation Fences: Obtain the COR's approval prior to removing substation fencing. Temporary protection for removed fences and controlled access to the substation shall be in accordance with OSHA 1926.957, "Construction in Energized Substations."

1.4.17 TRANSMISSION LINE SAFETY:

1. GENERAL: In addition to the requirements contained in OSHA 1926, Subpart V, "Power Transmission and Distribution," and other applicable OSHA requirements, the requirements contained in this section apply.

2. SUPERVISION AND AUTHORIZATION: Work shall be performed under the general supervision of the Contractor's superintendent. No work shall be performed in or near an energized facility that is under the operational control of Western until authorization to proceed and a Special Work Permit is obtained from Western's inspector, when appropriate.

   Provide documentation of obtaining protection and permission before performing any work on or near any electrical facility under the operational control of a non-Western agency or utility.

3. STRINGING PLAN: Procedures for stringing, including sagging and clipping operations, shall be made a part of the Safety and Health Program. The plan shall consist of a description of the stringing method proposed and include: the type of stringing equipment to be used; grounding and bonding devices and procedures; barrier and barricade design as applicable; isolation platform design and use; utility, highway, railway, and waterway crossing methods including guard structure design; clearances required; and locations and procedures for stringing adjacent to energized lines.

4. CONDUCTOR AND OVERHEAD GROUND WIRE STRINGING: Overhead ground wire and conductive pulling lines shall be considered the same as conductor in terms of required safety

precautions during installation or removal. Stringing operations shall be in accordance with OSHA 1926.955, "Overhead Lines," and the following additional requirements:

(1) Equipment and Pulling Operations:

1) Pulling machines (tuggers), braking machines (tensioners), and reel jacks shall be in accordance with OSHA 1926.955, "Overhead Lines," subparagraph (c)(12), and the following additional requirements. Stringing equipment and catch off points shall be firmly anchored against displacement. Reels shall be firmly attached to the reel jacks, and the reel jacks shall be anchored to prevent displacement or overturning in the event of a fouled reel or brake lockup.

2) Operators of pulling and braking machines shall be totally protected from contact with bullwheels, cable drums, and tension line snap back.

3) A designated person, in direct voice communication with the pulling machine operator, shall watch the attachment between the pulling line and the conductor as it travels through each stringing block.

4) If a conductor should catch under any firm object, the pulling shall stop and the tension shall be slacked off prior to attempting to free the conductor.

5) No person shall be allowed on any structure through which a conductor is being pulled (in motion).

6) A barricade shall be used to enclose the area between the tensioner and reel setup. Entering the area will be permitted only with the knowledge of the tension and pulling machine operators and when pulling is stopped and undesired tension released.

(2) Grounding and Bonding:

1) General: Comply with OSHA 1926.954, "Grounding for Protection of Employees," and 1926.955, "Overhead Lines." The following additional requirements apply to stringing work:

a. Pulling equipment, reels, and tensioning equipment shall be grounded to an approved ground. Equipment that can be touched simultaneously at a work site shall be bonded together and grounded to a single approved ground.

b. A moving-type ground (traveling ground) shall be installed and attached to an approved ground at the tensioning setup or bonded to the tensioner.

c. A 3-phase grounded short shall be maintained on the last suspension structure on each end of each isolated line section and shall remain in place until aerial work is complete. These shall be progressively removed as part of the final aerial cleanup.

d. When splicing, making up jumpers, and working around unspliced conductors on sequential pulls, employees shall not contact two conductors simultaneously until both conductors are bonded together.

e. Dead end structure jumpers shall be left off (open) to isolate line sections, and grounds shall not be left in place on these structures. Jumpers may be installed when aerial cleanup is completed on adjacent line sections.

f. Clipping work shall be performed between 3-phase grounded shorts.

g. Insulated aerial lifts shall not be utilized as primary employee protection from sources of electrical hazard. When grounding is required, insulated aerial lifts shall be bonded and grounded the same as noninsulated aerial lifts.

2) Grounding and Bonding for Stringing Over Energized Line Crossings: Comply with subsection (a) above and the following:

a. Conductive pulling lines and conductors shall be grounded at each structure adjacent to energized line crossings. This shall be accomplished with grounded travelers during stringing operations. Prior to removal of grounded travelers for conductor clipping, protective grounds leads shall be installed. These protective ground leads shall remain until clipping is completed for that line section.

b. Conductor clipping shall be completed on structures adjacent to energized crossings, prior to clipping the remaining structures in that line section.

c. Employees shall not contact two conductors simultaneously until both conductors are grounded to a common point, unless protective ground leads are installed and conductor clipping is completed on structures adjacent to energized line crossings.

d. Aerial lifts shall be grounded and bonded to the structure or conductor, as appropriate, until conductor clipping is completed on structures adjacent to energized crossings.

3) Grounding and Bonding for Stringing Adjacent to Energized Lines: Comply with Sections (a) and (b) above and the following:

a. Protective ground leads shall be placed at each structure during aerial work on conductors at that structure.

b. Aerial lifts shall be grounded and bonded to the structure or conductor as appropriate for aerial work.

c. When splicing, making up jumpers, and working around unspliced conductors on sequential pulls, employees shall not contact two conductors simultaneously until both conductors are bonded together and grounded to a common point.

(3) Crossing Energized Lines, Highways, Railroads, and Telephone Lines: The owner, utility, or authority having jurisdiction shall be notified in advance of making such crossings and necessary permits obtained. The following safety precautions and procedures shall be followed:

1) Prior to stringing over or under an existing power line, inform the owner or utility company and request the existing line be de-energized. Secure Hot Line Orders and/or Clearances from the respective utilities on non-Western lines. Western shall be kept fully informed, in writing, of such Hot Line Orders and Clearances or denials of such requests prior to the work being performed.

2) Protective guard structures shall be designed and installed at crossings to ensure that adequate clearance is continually maintained between the pulling lines or conductors and the facility being crossed. Clearances of guard structures, pulling lines, and conductors from energized lines shall be at least 5 feet but never less than the distance in Table V-1

of OSHA 1926, Subpart V, "Power Transmission and Distribution," for the voltage being crossed.

The protective guard structures shall be installed with the following minimum distances.

Type of Road	*Minimum Distance from Edge of Road
Gravel road	9 feet
Paved two lane road (county and State)	15 feet
Multilane road	30 feet
Railroad	As required by railroad agency

*If the agency in charge of the road to be crossed determines that greater minimum distances are needed, their minimum distance controls and shall be used.

The protective guard structures shall not be removed until the adjacent transmission line structures are clipped in.

3) Ropes utilized as lead lines at energized crossings shall be nonconductive and shall be kept clean and dry to protect their dielectric strength.

4) Crossings shall be attended when wire is being pulled. Each attendant shall be provided a means of direct communication with the pulling and tensioning machine operator.

5) Equipment at the pulling and tensioning sites, catch off points, conductor tails, and splice areas shall be enclosed by a barricade with access to equipment or conductor accomplished by isolation platforms. When work procedures require contact with a conductor or anything bonded to the conductor, employees shall work from isolation platforms or grounded work mats. If left unattended, the barricades shall be replaced with barriers and access points closed. The above requirements apply until after conductor clipping is completed on the structures adjacent to the energized line crossing.

(4) Stringing Adjacent to Energized Lines: For stringing operations adjacent to energized lines, comply with OSHA 1926.955, "Overhead Lines," subparagraph (d), and the following additional requirements:

1) Requirements for stringing operations adjacent to energized lines shall apply until stringing operations have progressed beyond the adjacent energized line and the conductor being strung is isolated by open jumpers.

2) Equipment at the pulling and tensioning sites, catch off points, conductor tails, and splice areas shall be enclosed by a barricade with access to equipment or conductor accomplished by isolation platforms. When work procedures require contact with a conductor or anything bonded to the conductor, employees shall work from isolation platforms or grounded work mats. If left unattended, the barricades shall be replaced with barriers and access points closed.

3) Aerial lifts used for splicing or clipping shall be barricaded and an isolation platform used for access to the equipment.

4) Barrier and barricade placement shall be a minimum of 10 feet away from grounds, grounded equipment, and conductors.

5) Guy and guy anchors shall be grounded to the worksite ground.

1.4.18 REMOVAL OR UPGRADING OF EXISTING TRANSMISSION LINE:

Prior to removal or upgrading of the existing transmission line, submit for approval a detailed removal plan. Plan shall include at least the following: method, equipment, and safety precautions to be used in removing the line with specific attention given to condition of existing poles for climbing, including both shell rot and structural integrity; parallel energized facilities, other hot line crossings, and railroad and road crossings; method or procedure for releasing the tension on the conductor to prevent structural failure; and procedures for cross arm, pole, and anchor removal. Removal of existing conductor and overhead ground wire requires the same grounding and safety precautions as installing new conductor and overhead ground wire. Requirements contained in Section 1.4.17, "Transmission Line Safety."

Western
AREA POWER
ADMINISTRATION

CONSTRUCTION STANDARDS

STANDARD 2
SITEWORK

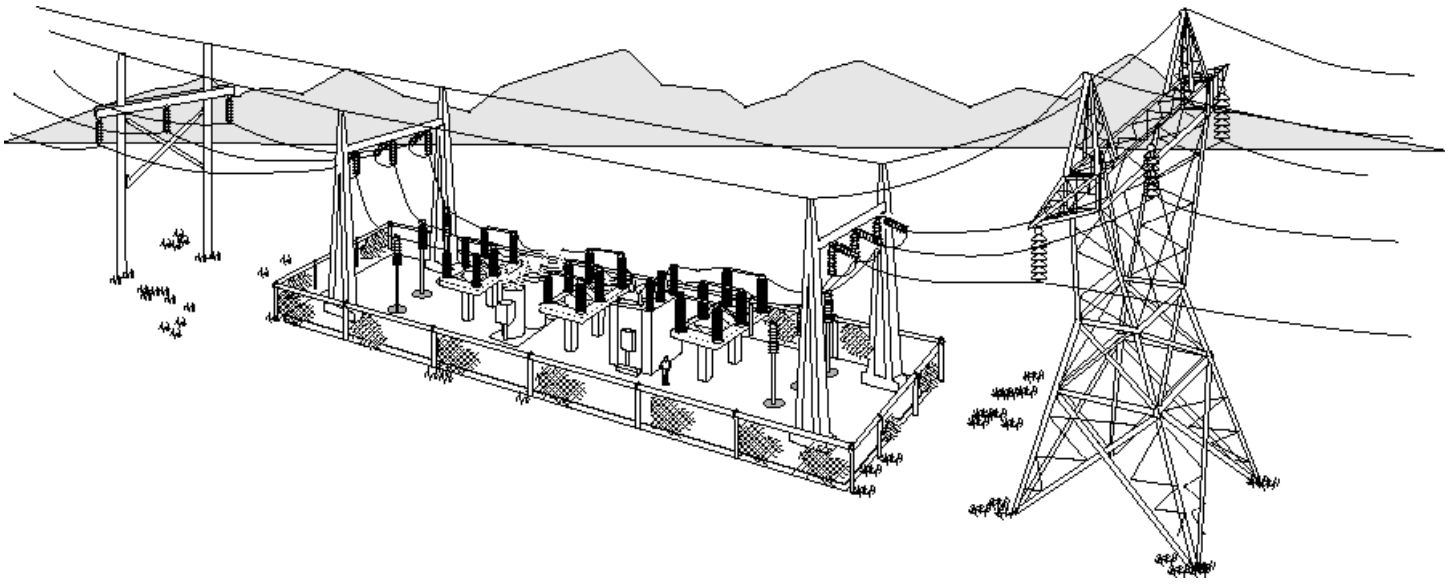

July 2009

SAFETY
A HABIT TO LIVE BY

STANDARD 2 – SITEWORK

TABLE OF CONTENTS

Page Number

SECTION 2.1--GENERAL 6

2.1.1 CONTRACTOR-FURNISHED DRAWINGS AND DATA 6
1. General 6
2. Compacting Earth Material 6
3. Approval Drawings for Cattle Guards 6
4. Gravel Surfacing 6
5. Soil-Applied Herbicide 6
6. Seeding 8
7. Asphalt Paving 8

SECTION 2.2--DEMOLITION 9

2.2.1 REMOVING BURIED ITEMS, FENCING, AND GRAVEL SURFACING AND CUTTING OFF FOUNDATIONS 9
1. Cutting Off Foundations 9
2. Excavation 9
3. Fence and Gate Removal 9
4. Refill 9
5. Existing Facilities To Remain 9
6. Material Disposal 9

2.2.2 REMOVING AND STORING STRUCTURES 9
1. General 9
2. Steel Structure Removal 9
3. Wood Pole Removal 9

SECTION 2.3--CLEARING AND GRUBBING FOR FAUCILITY SITES AND ACCESS ROADS 10

2.3.1 CLEARING AND GRUBBING 10
1. Clearing 10
2. Grubbing 10
3. Refill 10
4. Material Disposal 10
5. Timber Utilization 10

SECTION 2.4--CLEARING FOR TRANSMISSION LINE RIGHT-OF-WAYS AND ACCESS ROADS 11

2.4.1 CLEARING, GENERAL 11
1. General 11
2. Definitions 11
3. Tree Removal 11
4. Pine Needles 11

2.4.2 CLEARING CRITERIA 11
1. Access Clearing 11
2. Structure Vicinity Clearing 11
3. Conductor-To-Tree Clearance Clearing 11

2.4.3 CLEARED MATERIAL DISPOSAL 12

2.4.4 QUALIFICATIONS FOR TREE TRIMMERS 12

SECTION 2.5--EXCAVATION 13

2.5.1 EXCAVATION, GENERAL 13
1. Excavation Surfaces 13
2. Over Excavation 13

2.5.2 GRADING FOR TRANSMISSION LINE TOWER SITES AND LINE CLEARANCE 13
1. Drainage And Line Clearance 13
2. Stripping 13
3. Embankments 14

2.5.3 STRIPPING 14

2.5.4 EXCAVATION FOR FAUCILITY SITES AND ACCESS ROADS 14

2.5.5 EXCAVATION FOR FOUNDATIONS AND STRUCTURES 14
1. General 14
2. Excavations 14

2.5.6 EXCAVATION FOR TRENCHES 14
1. General 14
2. Excavation 14

2.5.7 EXCAVATION FROM BORROW 15
1. Off-Government Property and Rights-Of-Way 15
2. On-Government Property 15
3. Material 15

2.5.8 DISPOSAL OF EXCAVATED MATERIAL 15
1. General 15
2. Transmission Line Structure Sites 15

2.5.9 UNWATERING EXCAVATIONS 15
1. Information on Water Level 15
2. Concrete Placement 16
3. Water Pollution Prevention 16

2.5.10 CASING AUGER EXCAVATIONS 16
1. Concrete Placement 16

2.5.11 TRIAL AUGERING 16
1. General 16
2. Augering Operations 16

SECTION 2.6--EMBANKMENTS 17

2.6.1 CONSTRUCTING AND COMPACTING EMBANKMENTS 17
1. General 17
2. Preparing Foundation Material Under Embankments 17
3. Placing Material 17

SECTION 2.7--COMPACTION 18

2.7.1 COMPACTING EARTH MATERIAL 18
1. General 18
2. Testing 18
3. Compacting Clayey and Silty Material 18
4. Compacting Cohesionless Material 19

SECTION 2.8--BACKFILL 20

2.8.1 PLACING AND COMPACTING BACKFILL 20
1. General 20
2. Material 20
3. Placing 20
4. Compacting 20

2.8.2 GRAVELFILLS AND SANDFILLS 20
1. Material 20
2. Placing 21

2.8.3 SAND BACKFILL AND LUMBER PROTECTION FOR BURIED INSULATED ELECTRICAL CABLES AND CONDUITS 21
1. Material 21
2. Placing Backfill and Lumber Covers 21

SECTION 2.9--SITE DRAINAGE 22

2.9.1 CORRUGATED METAL PIPES 22
1. General 22
2. Material 22
3. Hauling and Handling 22
4. Installation 22

2.9.2 RIPRAP 23
1. Material 23
2. Placing 23

2.9.3 GRAVEL BLANKETS 23
1. Material 23
2. Placing 23

2.9.4 CONCRETE PIPE CULVERTS 23
1. Material 23
2. Installation 24

2.9.5 ROCK WATER CROSSING 24
1. Layout, Slope, and Location 24
2. Material 24
3. Placement 24

2.9.6 CONCRETE TRENCH DRAINS 25
1. Material 25
2. Fabrication 25
3. Installation 25

2.9.7 PRECAST CONCRETE DROP INLETS 25
1. General 25
2. Material 25
3. Fabrication 26
4. Inspection 26

SECTION 2.10--FENCING 27

2.10.1 CHAIN LINK FENCE 27
1. General 27
2. Material 27
3. Erection 28

2.10.2 BARBED WIRE FENCE 28
1. Material 28
2. Erection 28

2.10.3 CATTLE GUARDS 29
1. Design Requirements 29
2. Material 29
3. Construction 29

2.10.4 PERMANENT GATES IN EXISTING BARBED WIRE FENCES FOR TRANSMISSION LINE ACCESS ROADS 29
1. Material 29
2. Installation 29

2.10.5 FENCE GROUNDS FOR TRANSMISSION LINES 29
1. Material 29
2. Installation 30

SECTION 2.11--SURFACING 31

2.11.1 GRAVEL SURFACING 31
1. Material 31
2. Placing 31

2.11.2 REPLACING AND PROTECTING GRAVEL SURFACING 31
1. General 31
2. Protecting Gravel Surfacing 32

2.11.3 SOIL-APPLIED HERBICIDE 32
1. General 32
2. Herbicide Applicator's Qualifications 32
3. Regulations 32
4. Material 32
5. Application 32
6. Damage 33
7. Release of Hazardous Substances 33
8. Warranty 33

SECTION 2.12--LANDSCAPING 34

2.12.1 SEEDING 34
1. General 34
2. Material 34
3. Preparation 34
4. Application 34

SECTION 2.13--ASPHALT PAVING 36

2.13.1 GENERAL 36
1. Quality Assurance 36
2. Material 36
3. Mix Design 36
4. Batching and Mixing 36
5. Testing 36
6. Preparation of Subgrade 37
7. Placing of Gravel Base 37
8. Conditioning of Adjoining Surfaces 37
9. Spreading and Compacting Asphalt Paving 37
10. Tolerances 37
11. Pavement Marking Material 38

2.13.2 ASPHALT PAVING RECYCLING 38
1. General 38
2. Hot Mix Recycling 38
3. Cold Mix Recycling 38

2.13.3 GEOTEXTILE FABRIC 38

STANDARD 2 – SITEWORK

SECTION 2.1--GENERAL

2.1.1 CONTRACTOR-FURNISHED DRAWINGS AND DATA:

1. GENERAL: Use United States standard units of measurement and English words, signs, and symbols.

   Data and drawings shall be thoroughly checked for accuracy and completeness before submittal. Western will not check details and intermediate dimensions.

   Western will return one copy of each drawing and data sheet marked to indicate required changes and approved or not approved. Change the details which Western determines necessary to make the finished construction conform to these specifications.

   Western's review time is specified in the project specifications in the "Commencement, Prosecution, and Completion of Work" paragraph of Division 1 “General Requirements”. Western approval shall not relieve the Contractor from meeting the specifications requirements nor the responsibility for drawing correctness. Fabrication or material placement prior to approval will be at the Contractor's risk.

2. COMPACTING EARTH MATERIAL: Submit the following to the COR:

   (1) Name and qualifications of a testing laboratory at least 20 calendar days prior to start of compaction operations. The testing laboratory shall meet the requirements of ASTM D 3740.

   (2) Compaction test reports immediately after completion. Reports shall specify location by elevation and horizontal coordinates for each test taken. Testing requirements are provided in Section 2.7.1, “Compacting Earth Material”.

3. APPROVAL DRAWINGS FOR CATTLE GUARDS: Prior to providing the cattle guards, submit for approval two copies of the following drawings and data to the Civil Engineer and a copy of the transmittal letter to the COR:

   (1) Complete details covering the cattle guards to be furnished including length, width, and size of the foundation, framework, anchor bolts, end wings, and other items as appropriate.

   (2) Concrete compressive strength and type of reinforcement.

   (3) Type of finish for metal products.

   (4) Certifications and/or calculations showing that the foundation and framework are designed for the truck loading. Certifications and/or calculations shall include design loadings, foundation reactions, soil bearing pressure, and other appropriate design parameters.

4. GRAVEL SURFACING: Prior to placing, the Contractor shall certify material gradation with test data representing the gravel surfacing to be used. After placing, the Contractor shall certify in-place density and compaction with tests obtained from locations as determined by the COR. The in-place density test results shall be furnished to the COR within 7 days after completion of the tests. One test per 250 cubic yards of material, or fraction thereof, shall be performed for gradation, Atterberg Limits Tests, and density testing. The gradation analysis and the Atterberg Limits Tests shall be performed either at the batch plant or on the site, as directed by the COR.

5. SOIL-APPLIED HERBICIDE: Submit the following:

STANDARD 2 – SITEWORK

(1) Herbicide Applicator's References: At least 30 calendar days prior to the date of intended application, submit two copies to the COR and one copy to the Environmental Specialist of a list of references. The list of references shall include clients (with telephone numbers) previously worked for during the past 2 years.

(2) Herbicide Applicator's Certification/License: At least 30 calendar days prior to the date of intended application, submit to the COR one copy of the herbicide applicator's certification/license number for the State in which herbicides will be applied.

(3) Herbicide Application Plan: At least 30 calendar days prior to the date of intended application, submit two copies to the COR and one copy to the Environmental Specialist of a written Herbicide Application Plan. The plan shall specify the following:

1) Planned date of application.

2) Herbicide products to be applied and planned application rates (pounds of active ingredient per acre or quantity of product per acre). Spray marking dye name and manufacturer.

3) Method of application (equipment to be used to apply herbicide).

4) Herbicide manufacturer's product specimen label (include directions for use of material, use precautions, and storage and disposal directions).

5) Material Safety Data Sheets (MSDS).

6) Safety procedures that will be followed (including safety equipment and clothing).

(4) Final Report: Within 7 calendar days after each application, submit two copies to the COR and one copy to the Environmental Specialist of a written report which provides the record keeping information required by Federal and State regulations. The report shall include the following:

1) A synopsis of the services provided.

2) Date of application.

3) Place (facility) and size of area (square feet or acreage) treated.

4) Name and manufacturer of herbicide applied, together with the EPA pesticide registration number and product lot number from the labels. Include name and manufacturer of spray marking dye.

5) Method of application (equipment used, carrier).

6) Weather conditions at time of application (wind speed, wind direction, temperature, rainfall, and humidity).

7) Quantity/rate of herbicide applied pounds of active ingredient per acre or quantity of product per acre.

8) Problems that occurred such as any health effects and noncompliance with environmental and health/safety laws or regulations.

9) Other information/data as required by applicable local, Federal and State regulations.

6. SEEDING: Submit two copies of the following to the COR prior to seeding:

   (1) Seed Certification: For each seed type include botanical name; common name; percentage in mixture by weight; and percentage of purity, germination, and weed seed. Include all other data required by State seed regulations. Data for germination tests shall be dated no earlier than 3 months prior to seed delivery at job site.

   (2) Fertilizer Certification: Certificate of inspection required by State seed regulations and manufacturer's or vendor's certified analysis of fertilizer material.

7. ASPHALT PAVING: The following shall be submitted to the COR for approval at least 20 days prior to placement of asphalt paving:

   (1) Testing Laboratory: Submit name and qualifications of testing laboratory.

   (2) Mix Design: Submit mix designs in accordance with Marshall Series ASTM D 1559 or Hveem ASTM D 1560.

   (3) Asphalt Cement: Submit manufacturer's certification that asphalt cement grade specified meets the requirements of ASTM D 3381.

   (4) Aggregate for Paving Courses: Submit certification showing that fine and coarse aggregates meet the requirements of ASTM D 692 and ASTM D 1073.

   (5) Submit certification showing that the gravel base meets the requirements of ASTM D 2940.

   (6) Submit batch certificate, including batch weight and time of batching to the COR when each load of asphalt is delivered.

SECTION 2.2--DEMOLITION

2.2.1 REMOVING BURIED ITEMS, FENCING, AND GRAVEL SURFACING AND CUTTING OFF FOUNDATIONS:

1. CUTTING OFF FOUNDATIONS: Cut off foundations 30 inches below the ground surface.

2. EXCAVATION: Excavate as required for removal and cutting off operations.

3. FENCE AND GATE REMOVAL:

   (1) Chain Link Fence: Remove existing chain link fence in accordance with the Standard 1 - General Requirements, Section 1.5.16 "Substation Safety". It is a standard 7-foot-high chain link fence with a guard of three strands of barbed wire. The fenceposts are set in concrete.

   (2) Disconnect ground cable risers from the fence and bury a minimum of 18 inches below finished grade.

   (3) Remove warning and safety signs and reinstall as directed by the COR.

   (4) Barbed Wire Fence: Existing barbed wire fence consists of three or four strands of barbed wire supported on wood or steel posts.

   Posts and concrete footings shall be completely removed. If fenceposts are reused, concrete or earth material adhering to the posts shall be removed prior to reinstallation.

4. REFILL: Remove loosened and disturbed earth material from the excavation resulting from removal or cutting off operations. Refill the excavation to the adjacent ground surface or subgrade with earth material approved by the COR. Compact the earth material in accordance with Section 2.8.1, "Placing and Compacting Backfill". Replacement of gravel surfacing shall be in accordance with Section 2.11.2, "Replacing and Protecting Gravel Surfacing". Refill for barbed wire fencepost holes need not be compacted but shall be mounded to allow for settlement.

5. EXISTING FACILITIES TO REMAIN: During removal or cutting off operations, take necessary precautions not to loosen or damage existing facilities that are to remain in place. Existing facilities that are loosened or damaged as a result of the Contractor's operations shall be replaced or repaired as approved by the COR.

6. MATERIAL DISPOSAL: Dispose of removed concrete, spalls, metalwork, fence, wood poles, guys, and anchors that are not reused, and other debris in accordance with Standard 13 – Environmental Quality Protection, Section 13.8 "Disposal of Waste Material".

2.2.2 REMOVING AND STORING STRUCTURES:

1. GENERAL: Removed material shall become the Contractor’s property and shall be promptly removed from the right-of-way by the Contractor.

2. STEEL STRUCTURE REMOVAL: Remove and store structures in accordance with Standard 4 - Substation Metalwork and Transmission Line Lattice Towers, Section 4.1.13 “Relocating, Modifying, and Storing Steel Structures and Towers”.

3. WOOD POLE REMOVAL: Completely remove wood poles. Completely remove guys and anchors or cut off the guys and anchors 30 inches below ground surface in cultivated areas and 12 inches below ground surface in uncultivated areas.

SECTION 2.3--CLEARING AND GRUBBING FOR FACILITY SITES AND ACCESS ROADS

2.3.1 CLEARING AND GRUBBING:

1. CLEARING: Brush, trees, rubbish, and other objectionable matter shall be cleared. Trees designated by the COR shall be protected from damage. Clear to a minimum of 3 feet outside of the cut and fill slope lines, but not past the right-of-way.

2. GRUBBING: Ground surfaces under embankments and ground surfaces of excavations to be used for embankments or backfill material shall be cleared of stumps, roots, and vegetable matter. Stumps shall be removed and roots grubbed to a depth of 18 inches below ground surface.

3. REFILL: Refill holes resulting from stump and associated root removal with earth material approved by the COR.

   Compact the earth material in accordance with 2.8.1, "Placing and Compacting Backfill".

4. MATERIAL DISPOSAL: Burning or burying material on the right-of-way is not permitted. Disposal of cleared and grubbed material shall be in accordance with Standard 13 – Environmental Quality Protection, Section 13.8 "Disposal of Waste Material".

5. TIMBER UTILIZATION: In accordance with the Government's policy for maximum utilization of timber, the Contractor shall channel merchantable timber into beneficial use.

SECTION 2.4--CLEARING FOR TRANSMISSION LINE RIGHT-OF-WAYS AND ACCESS ROADS

2.4.1 CLEARING, GENERAL:

1. GENERAL: Clearing shall be performed so as to minimize marring and scarring the countryside and preserve the natural beauty to the maximum extent possible. Except for danger trees, no clearing shall be performed outside the limits of the right-of-way.

2. DEFINITIONS: The word "trees" includes "brush" and "shrubs". The words "shelter belt" include grove of trees which has been purposely planted. The words "danger tree" mean a tree located within or adjacent to the easement or permit area that present an immediate hazard to the facility or have the potential to encroach within the safe distance to the conductor or structure as a result of bending, growing, swinging, or falling toward the conductor.

3. TREE REMOVAL: Trim or remove trees only as necessary to clear for access roads, including roads through shelter belts which extend across the right-of-way; to provide land access to transmission structures; to maintain electrical clearances to conductors; and to prevent structure damage due to falling danger trees.

   Trees which would require removing the major portion shall be completely removed. Trees which are removed shall be cut off at the ground surface. Operations for felling and removing trees shall be accomplished so as to protect and preserve trees which are to remain.

4. PINE NEEDLES: Excessive amounts of pine needles left by clearing of trees, as determined by the COR, shall be removed for the right-of-way and disposed of in a location to prevent harm to grazing domestic animals.

2.4.2 CLEARING CRITERIA:

1. ACCESS CLEARING: Clear a 15-foot-wide strip for access to structure sites which are in timbered areas. Trees shall be cleared to the minimum extent required to provide suitable access for construction equipment. Trees to be removed to provide access within the limits of the right-of-way shall be cut off at the ground surface to permit vehicular travel without causing vehicle damage. Stumps and root systems may remain in the traveled surface unless otherwise designated to be removed by the COR.

2. STRUCTURE VICINITY CLEARING: Trees adjacent to transmission line structures shall be removed to permit vehicular access and/or to minimize the possibility of structure damage due to falling trees. Except for danger trees, tree removal shall not extend beyond a 20-foot radius from any transmission structure member.

3. CONDUCTOR-TO-TREE CLEARANCE CLEARING: Remove trees to provide the vertical tree-to-conductor clearance over the width specified in the project specifications. From this width to the right-of-way edges, the elevation at the top of the trees will be allowed to increase at the rate of 1 foot for each foot increase in distance from the transmission line centerline. Table 2-1 provides the necessary tree-to-conductor clearance criteria for tree removal based on the distance from the nearest point on a tree to the conductor. If the distance is less than or equal to the distances specified for the voltage shown in table 2-1 below, the tree must be removed.

TABLE 2-1 TRANSMISSION LINE DANGER TREE REMOVAL REQUIREMENTS

Line Voltage (Phase to Phase)	Minimum Distance Between Conductor and Danger Trees (Ft-In)
69 kV and below	15’-0”
115 kV	15’-8”
138 kV	16’-4”
161 kV	16’-8”
230 kV	18’-0”
345 kV	20’-4”
500 kV	24’-0”

2.4.3 CLEARED MATERIAL DISPOSAL:

Cleared material shall be disposed of in accordance with Standard 13 – Environmental Quality Protection, Section 13.8 "Disposal of Waste Material”.

In accordance with the Government's policy for maximum utilization of timber, the Contractor shall channel merchantable timber into beneficial use.

2.4.4 QUALIFICATIONS FOR TREE TRIMMERS:

Certified personnel shall perform or supervise work involving tree trimming/felling activities. Certification shall ensure that an individual is knowledgeable and competent in performing the work. For work involving tree removal near energized equipment, certification shall include successful completion of a line clearance tree felling and trimming training program. For work involving tree removal absent of electrical hazards, certification shall include successful completion of a tree felling and trimming training program. Certification training shall include hands-on competency testing under the direction of an expert in the field. Submit qualifications certification of training to the COR.

SECTION 2.5--EXCAVATION

2.5.1 EXCAVATION, GENERAL:

The Bidding Schedule items which contain excavation include segregating, loading, transporting, and temporarily stockpiling excavated material as needed; work and material necessary to maintain excavations during construction; and removing temporary construction when no longer required.

1. EXCAVATION SURFACES: Excavated surfaces, except surfaces of auger excavation, upon or against which concrete is to be placed, shall be finished to the dimensions required, moistened with water, and tamped or rolled to form firm and compact foundations for placing concrete structures. Special preparation of surfaces of auger excavations is not required. Auger excavations for structures shall be performed with earth augering equipment. Undercuts for bells shall be made in undisturbed material or compacted embankments.

   Where concrete is to be placed upon or against rock surfaces, the excavations shall be sufficient to provide the dimensions of concrete shown on the drawings or as specified in the Project Specifications; required dimensions being exceeded only as approved by the COR.

2. OVER EXCAVATION: Except where directed by the COR, over excavation and required concrete, gravelfill, sandfill, and compacted backfill due to such over excavation shall be at the Contractor's expense.

   If material is excavated or loosened beyond the excavation lines, remove loosened material and fill over excavation as follows:

   (1) With concrete where concrete structures or concrete backfill are required to be placed upon or against excavated surfaces.

   (2) With gravelfill where structures are required to be placed on gravelfill.

   (3) With sandfill where structures are required to be placed on sandfill.

   (4) With selected material approved by the COR for other over excavations.

   Selected material and gravelfill placed in over excavations shall be compacted in accordance with Section 2.7.1, "Compacting Earth Material". Concrete, gravelfill, and sandfill shall conform, respectively, to Standard - 3 Concrete and to Section 2.8.2, "Gravelfills and Sandfills".

   Where additional excavation is prescribed by the COR to remove unsuitable material, excavation, compacted backfill, gravelfill, sandfill, and concrete shall be in accordance with the applicable sections of these standards and be paid for in accordance with the contract clause titled "Changes".

2.5.2 GRADING FOR TRANSMISSION LINE TOWER SITES AND LINE CLEARANCE:

1. DRAINAGE AND LINE CLEARANCE: Perform grading, as shown on drawing 41 2017 and as directed by the COR, to provide adequate drainage around structure and tower sites and sufficient clearance under conductors. Spread excavated material around the site from which excavated. Pile topsoil separately and replace after work completion.

2. STRIPPING: Strip embankment areas to a depth of 6 inches. Stripped material, or as much as may be required, shall be used for the upper 6 inches of embankment slopes. Spread remaining stripped material where directed by the COR.

3. EMBANKMENTS: Construct embankments to the lines and grades shown on the drawings or prescribed by the COR. No embankment shall be made of frozen material or placed on frozen surfaces. Embankment material shall be suitable material, as determined by the COR, obtained from required excavations or from borrow, and of an acceptable gradation of material to provide compacted embankments in accordance with Section 2.7.1 "Compacting Earth Material".

2.5.3 STRIPPING:

Strip areas to a depth of 6 inches. Stripped material, or as much as may be required, shall be used for the upper 6 inches of embankment slopes and excavated areas to be seeded. Remaining stripped material shall be wasted in accordance with Section 2.5.8, "Disposal of Excavated Material". When necessary, stripped material shall be temporarily stockpiled prior to final placement.

Except as provided above for embankment slopes and excavated areas that are to be seeded, stripped material shall not be used for backfill or constructing compacted embankments.

2.5.4 EXCAVATION FOR FACILITY SITES AND ACCESS ROADS:

Suitable material excavated during the regrading operations may be used for embankments and backfill. This excavated material shall not be used for gravelfills or gravel surfacing unless it is processed to meet applicable requirements of Sections 2.8.2, "Gravelfills and Sandfills" or 2.11.1, "Gravel Surfacing".

Grade to the lines, grades, and dimensions shown on the drawings. Drainage ditches shall be clear of obstructions and diverge sufficiently at the lower ends to prevent erosion.

2.5.5 EXCAVATION FOR FOUNDATIONS AND STRUCTURES:

1. GENERAL: Excavate for concrete foundations, slabs, buildings, cable entry boxes, gravelfills, structures, poles, fences, cattle guards, pull boxes, concrete vaults, removing concrete foundations, switch operating platforms, equipment cabinet platforms, or any other items requiring excavation to construct the facilities in the project specifications.

2. EXCAVATIONS: Excavations shall provide for concrete foundations and structure embedments as provided in the project specifications and as shown on drawing 41 2017. Protect the excavation to maintain a clean subgrade until the foundation is placed. Remove sand, mud, silt, and other objectionable material which may accumulate in the excavation before placing concrete.

2.5.6 EXCAVATION FOR TRENCHES:

1. GENERAL: Excavate for cables, conduits, drains, culverts, duct banks, utilities, grounding systems, buried fiber optic cables, and any other items requiring trenches to construct the facilities in the project specifications.

2. EXCAVATION:

   (1) Ground Cable, Conduit, and Insulated Cable: Excavation for electrical ground cable and conduit shall be to depths of not less than 18 inches in common material as measured from the subgrade elevation under gravel surfacing to bottom of the trenches. If rock is encountered prior to obtaining the 18-inch depth, excavation shall extend 6 inches into rock or the amount required to obtain an overall trench depth of 18 inches, whichever is less.

   Excavation for insulated electrical cable shall be made to lines and depths shown on drawing 31 1006.

(2) Culvert and Pipe Trenches: Excavation shall be to depths and grades shown on the drawings. Culvert and pipe trenches shall be finished so that the pipe will be fully supported by unexcavated ground under the bottom quarter of the circumference. Excavation shall accommodate bells, couplings, fittings, and valves.

Where rock or other unsuitable material in the bottom of a trench might cause unequal settlement or provide unequal bearing for the culvert or pipe, the trench shall be over excavated to a depth of 6 inches if in rock and to depths sufficient to remove the other unsuitable material. The over excavated areas shall be backfilled and compacted in accordance with Section 2.8.1, "Placing and Compacting Backfill". Backfill material shall be shaped to fit the curvature of the culvert or pipe under the bottom quarter of its circumference.

2.5.7 EXCAVATION FROM BORROW:

1. OFF-GOVERNMENT PROPERTY AND RIGHTS-OF-WAY: Make arrangements for obtaining borrow material, off-Government property and rights-of-way, including transporting and stockpiling material prior to placement.

2. ON-GOVERNMENT PROPERTY: The COR will designate location of borrow pits in the borrow site from which material shall be obtained. Strip borrow pits of topsoil to a depth of approximately 6 inches. Stripped topsoil shall be stockpiled and, upon completion of borrow excavation, spread to a uniform depth of 6 inches over areas of borrow pits from which removed. Before replacing topsoil, excavated surfaces shall be reasonably smooth and uniformly sloped as approved by the COR. Bring sides of borrow pits to stable slopes with slope intersection shaped to carry the natural contour of adjacent undisturbed terrain into the pit to give a natural appearance.

   Surface of borrow pits shall be left reasonably smooth as approved by the COR. When necessary, as determined by the COR, borrow pits shall be drained by open ditches to prevent accumulation of standing water. Drainage shall be controlled as prescribed in Standard 13 - Environmental Requirements - Section 13.16 - “Prevention of Water Pollution”.

3. MATERIAL: Borrow material shall be suitable material, as determined by the COR, and be an acceptable gradation to provide compacted embankments in accordance with Section 2.6.1, "Constructing and Compacting Embankments". Borrow material shall contain sufficient clay to prevent excessive caving of auger-type excavations performed in the substation embankments.

2.5.8 DISPOSAL OF EXCAVATED MATERIAL:

1. GENERAL: Suitable material from excavations, as determined by the COR, shall be used for required earthwork. The excess material shall be disposed of in accordance with Standard 13 – Environmental Quality Protection, Section 13.8 "Disposal of Waste Material”.

2. TRANSMISSION LINE STRUCTURE SITES: Excavated material which is suitable for backfill shall be used for backfill at the site from which excavated. Except in cultivated fields, excess excavated material shall be spread evenly around or adjacent to the site as directed by the COR. In cultivated fields, excess excavated material shall be removed from the transmission line and access road right-of-ways. The Contractor shall make arrangements required for disposal of waste material in an approved landfill.

2.5.9 UNWATERING EXCAVATIONS:

1. INFORMATION ON WATER LEVEL: Available information on water level is shown on the geologic logs of subsurface exploration. However, water levels encountered at time of construction may vary considerably from water levels shown.

2. CONCRETE PLACEMENT: During concrete placement, water level shall be kept below top of concrete. When the COR determines that unwatering is impractical, place concrete under water in accordance with ACI 304R.

3. WATER POLLUTION PREVENTION: Unwatering excavations shall be in accordance with Standard 13 - Environmental Requirements - Section 13.16 - "Prevention of Water Pollution".

2.5.10 CASING AUGER EXCAVATIONS:

Casing of an excavation shall be performed only if the COR determines the auger excavation cannot be made to the prescribed lines without using casing. The requirement for casing will depend on existing site conditions at time of auger excavation. The hole depth to be cased shall be as directed by the COR.

1. CONCRETE PLACEMENT: Casing shall be withdrawn as concrete is deposited, with the casing removed after concrete placement is finished. Concrete placement shall be maintained at a sufficient height within the casing to prevent earth infusion into the concrete or reduction in diameter by earth pressure on the fresh concrete.

   Concrete placed under water shall be in accordance with ACI 304R.

2.5.11 TRIAL AUGERING:

1. GENERAL: Trial augering includes auger excavations that are attempted and cannot be completed due to encountering unsatisfactory material.

2. AUGERING OPERATIONS: If unsatisfactory material, as determined by the COR, is encountered during augering that prevents excavating to required depths, then non-auger type foundations shall be substituted for the intended auger type. The substituted foundation shall be approved by the COR.

SECTION 2.6--EMBANKMENTS

2.6.1 CONSTRUCTING AND COMPACTING EMBANKMENTS:

1. GENERAL: Embankments shall not be constructed in an area where clearing, grubbing, and stripping are required until that work has been completed. Maintain embankments to the proper elevations, dimensions, and slopes until final acceptance of all work.

2. PREPARING FOUNDATION MATERIAL UNDER EMBANKMENTS: After completing clearing, grubbing, and stripping and before the first layer of embankment is placed, the foundation material, other than rock surfaces, shall be scarified to a 6-inch minimum depth. The layer of scarified material shall be compacted in accordance Section 2.7.1, "Compacting Earth Material".

3. PLACING MATERIAL: Embankment material shall be suitable material, as determined by the COR, obtained from required substation site excavation. If sufficient suitable material is not available from required substation site excavation, additional suitable material shall be obtained from borrow areas as specified in, Section 2.5.7, "Excavation From Borrow". Embankment material obtained from borrow shall contain sufficient clay to prevent excessive caving of auger-type excavations.

   Stripped material shall not be used for constructing embankments, except for the upper 6 inches of material placed on embankment slopes to be seeded.

   Excavation operations for the compacted embankments shall result in an acceptable gradation of material to provide for stability when compacted. Distribution of material shall result in material being homogeneous and free from lenses, pockets, or streaks. Stones placed in compacted embankments shall not exceed 5 inches. Stones larger than 5 inches found in otherwise approved material shall be removed prior to compacting operations. Material used in constructing embankments shall be clean and free from vegetation, stumps, roots, pieces of timber, and other foreign material. Material shall not be placed in embankments when either the material or the surface on which it will be placed is frozen. Embankments shall be placed, moistened, and compacted in accordance with Section 2.7.1, "Compacting Earth Material".

SECTION 2.7--COMPACTION

2.7.1 COMPACTING EARTH MATERIAL:

1. GENERAL: Where compacting earth material is required, material shall be deposited in horizontal layers and compacted as specified, except that the density and moisture requirements for gravel surfacing shall be in accordance with Section, 2.11.1, "Gravel Surfacing".

   Excavating, placing, moistening, and compacting operations shall result in material being uniformly compacted throughout the required section and homogeneous, free of lenses, pockets, streaks, or laminations.

2. TESTING:

   (1) Testing Laboratory: An approved testing laboratory shall be employed by the Contractor to perform compaction tests. The testing laboratory shall meet the requirements of ASTM D 3740.

   (2) Tests: Perform a minimum of one successful test for every 1,000 cubic yards, or fraction thereof, of embankment and for every 100 cubic yards, or fraction thereof, of backfill. Material samples for testing shall be obtained from locations as determined by the COR. A successful test is a test showing that the material has been compacted to the specified density and moisture. If a test is not successful, the Contractor shall perform additional tests and additional work as required in order to ensure that the specified density and moisture are achieved.

3. COMPACTING CLAYEY AND SILTY MATERIAL:

   (1) General: Thickness of horizontal layers after compaction shall not be more than 6 inches. Excavating and placing operations shall result in material, when compacted, being blended sufficiently to secure the highest practicable density, impermeability, and shear strength.

   (2) Moisture Content: Prior to and during compacting operations, material shall have a moisture content within plus or minus 2 percentage points of optimum moisture. Moisture content shall be uniform throughout each layer.

   If the moisture content is not within 2 percentage points of optimum, the compacting operations shall not proceed, except with the specific approval of the COR, until the material has been wetted or allowed to dry to obtain optimum moisture content within the tolerances. No adjustment in price will be made on account of wetting or drying the material or on account of delays occasioned thereby.

   (3) Compaction: When the material has been conditioned, it shall be compacted by rollers or by hand or power tampers. Where hand or power tampers are used in confined areas, they shall be equipped with suitably shaped heads to obtain the required density.

   (4) Soil Density: The density (dry) of the soil fraction in the compacted material shall not be less than 95 percent of the laboratory standard maximum soil density (dry) as determined by ASTM D 698, Method A, compaction test for the material being compacted. The standard maximum soil density is the dry weight per cubic foot of the soil compacted at optimum moisture content by laboratory procedure.

4. COMPACTING COHESIONLESS MATERIAL:

   (1) General: Thickness of horizontal layers after compaction shall not be more than 6 inches if compaction is by tampers or rollers; not more than 12 inches if compaction is by treads of crawler-type tractors, surface vibrators, or similar equipment; and not more than the penetrating depth of the vibrator if compaction is by internal vibrators. Water shall be added as required to obtain the specified density.

   (2) Relative Density: Relative density of the compacted material shall not be less than 70 percent as determined by ASTM D 4253 and ASTM D 4254.

SECTION 2.8--BACKFILL

2.8.1 PLACING AND COMPACTING BACKFILL:

1. GENERAL: Place and compact backfill for excavations listed in Section 2.5.5, “Excavation for Foundations and Structures,” 2.5.6, “Excavations for Trenches,” and other work requiring backfill. Surface of compacted backfill shall slope away from a building a minimum of 4 inches in 10 feet.

2. MATERIAL:

   (1) General: Obtain backfill material from required excavations. If sufficient suitable material is not available from required excavations, obtain additional material from borrow areas as specified in Section 2.5.7, "Excavation From Borrow". Type of backfill material and amount shall be approved by the COR.

   (2) Backfill Near Electrical Conduit: Backfill within 2 inches of buried electrical conduit shall be sand or equally fine earth material. Sand backfill for buried insulated electrical cable is specified in Section 2.8.3, "Sand Backfill and Lumber Protection for Buried Insulated Electrical Cables".

   (3) Backfill Around PVC Piping: Material passing a 3/8-inch sieve shall be used around PVC piping to a height of 6 inches above the pipes.

   (4) Backfill Around Building Piping: Material passing a 3/4-inch sieve shall be used around building piping, to a height of 12 inches above the pipes.

   (5) Other Backfill: Other backfill material shall not contain stones larger than 3 inches in diameter, vegetation, stumps, roots, pieces of timber, and other foreign material.

3. PLACING: Manner of depositing backfill material shall be approved by the COR. Material shall not be placed when either the material or the surface on which it will be placed is frozen. Stripped material shall not be used for backfill.

   Backfill shall be placed and compacted about corrugated metal pipe culverts, concrete pipe culverts, and corrugated metal pipe drains in accordance with this section and Sections 2.9.1, "Corrugated Metal Pipes" and 2.9.4, "Concrete Pipe Culverts".

   Sloping backfill shall be placed and compacted adjacent to transmission line structure foundations and poles to an elevation approximately 6 inches above the original ground surface and uniformly sloped away.

4. COMPACTING: Backfill shall be compacted in accordance with Section 2.7.1, "Compacting Earth Material".

2.8.2 GRAVELFILLS AND SANDFILLS:

1. MATERIAL:

   (1) Gravelfills: Gravelfill shall be composed of hard, dense, durable rock particles, and range from 3/16 inch to 3/4 inch.

   (2) Sandfills: ASTM C 33 for fine aggregate.

   (3) Sheet Polyethylene: Six mils thick.

2. PLACING:

(1) General: Before gravelfill or sandfill is placed, the subgrade shall be leveled to a uniform cross section free from depressions and soft spots. Gravelfill or sandfill shall be placed to the lines and grades shown on the drawings.

(2) Building Piping: Building piping to be buried shall be laid prior to placing gravelfill.

(3) Building Floor Slabs: A layer of sheet polyethylene shall be placed over the gravelfill beneath the building floor slab. Prior to placing the sheet polyethylene, the surfaces of gravelfill shall be prepared to prevent damage to the covering. Sheet polyethylene shall be lapped 6 inches at ends and edges.

(4) Building and Concrete Foundations: Gravelfills for service building and for concrete foundations shall be deposited and compacted as specified in Section 2.7.1, "Compacting Earth Material".

(5) Sandfills: Sandfills in service building cable entry box, and in Type C cable trenches and pull boxes shall not be compacted.

2.8.3 SAND BACKFILL AND LUMBER PROTECTION FOR BURIED INSULATED ELECTRICAL CABLES AND CONDUITS:

1. MATERIAL:

(1) Sand: ASTM C 33 for fine aggregate.

(2) Lumber: Lumber shall be 2 inches x 8 inches, constructed of noncombustible recycled plastic, and equal to: Plastic Lumber by the Plastic Lumber Company, Inc., 540 South Main Street, Akron, OH 44311; Recycle made Plastic Lumber by Recycled Plastics Industries, Inc., 1820 Industrial Drive, Green Bay, WI 54302; Polywood by A.R.W. Polywood, Inc., 700 East Wayne Street, Lima, OH 45802.

2. PLACING BACKFILL AND LUMBER COVERS:

(1) Sand Backfill: The bottom portion of trenches for buried insulated electrical cables shall be backfilled with sand to provide 2 inches of sand both below and above the cables and a minimum of 2 inches of sand between the sides of the trench and the closest cable. Where there is more than one cable in a trench, the cables may be grouped together and need not be separated by sand.

(2) Lumber: Plastic lumber shall be placed lengthwise over the sand backfill to provide a continuous cover above the cables and conduits without spaces between ends of lumber. Sand backfill is not required for conduit installations.

(3) Soil Backfill: Backfill trench above the lumber with soil and compact in accordance with Section 2.7.1, "Compacting Earth Material".

SECTION 2.9--SITE DRAINAGE

2.9.1 CORRUGATED METAL PIPES:

1. GENERAL: Corrugated metal pipe drains include a flared-end section at inlets and corrugated metal pipe culverts include a flared-end section at each pipe end.

2. MATERIAL:

   (1) Corrugated Steel Pipe and Coupling Bands: ASTM A 929, zinc coated (galvanized), 16-gage minimum thickness, or approved equal.

   (2) Flared-End Sections: Galvanized-steel, flared-end sections by Armco Drainage and Metal Products, Inc., P.O. Box 800, Middletown, OH 45043; or equal.

3. HAULING AND HANDLING:

   (1) General: Haul and handle pipe with care to avoid damage to the galvanized coating. Rope, cable, or chain slings shall not be used for handling the pipe, but canvas slings not less than 12 inches in width may be used.

   (2) Repair: ASTM A 780, except that the coating thickness shall be a minimum of 3.0 mils. Pipe that is damaged beyond repair shall be replaced. Damaged pipe shall be removed from the work site.

4. INSTALLATION:

   (1) General: Corrugated metal pipe shall be laid at the locations and to the grades shown on the drawings and as directed by the COR. Trenches shall be excavated in accordance with Section 2.5.6, "Excavation for Trenches". Pipe shall be laid with outside laps of circumferential joints pointing upstream and with longitudinal joints at the sides. Fastenings shall be drawn tight. Pipe shall be laid so that the departure from and return to established alignment and grade shall not exceed 1/8 inch per foot of pipe, but with not more than a 1-inch total departure. Pipe shall be placed so as to be fully supported over the bottom quarter of the circumference. Coupling bands shall be used to join sections of pipe. Coupling bands shall be installed to ensure tight joints, with the joints between sections at the center of the coupling bands.

   (2) Grounding: Corrugated metal pipe drains shall be grounded in accordance with Standard 9 - Substation Electrical, Section 9.2.1 "Grounding System".

   (3) Backfill: As each section of pipe is laid, backfill material shall be placed and tamped about the pipe to hold it in place until the joints are completed. After the joints have been completed, backfill shall be placed and compacted in accordance with Section 2.8.1, "Placing and Compacting Backfill".

   Equipment travel over the culverts shall not be permitted until backfill has been placed and compacted to the depth recommended by the pipe manufacturer, but not less than 1 foot above the culvert.

2.9.2 RIPRAP:

1. MATERIAL:

   (1) Riprap: Rock shall be hard, dense, and durable. Either quarried rock fragments or rounded cobbles and boulders may be used. Rock shall be reasonably well graded from a maximum size of 17 inches to a minimum size of 6 inches. "Reasonably well-graded" means that there should be a reasonably good distribution of sizes of particles from the coarsest to the finest and without a major deficiency of any size or group of sizes.

   (2) Sand and Gravel Bedding: Bedding shall be either a sand and gravel mixture or sand and crushed rock, reasonably well graded to a maximum size of 1 1/2 inches.

2. PLACING: Riprap shall be bedded in a continuous layer of sand and gravel. Riprap need not be hand placed, but may be dumped and smoothed by moving rocks into position so as to ensure the in-place material is stable and without tendency to slide and that there are no large unfilled spaces within the riprap. Inclusion of earth, sand, or rock dust in excess of 5 percent, by volume, is not permitted.

2.9.3 GRAVEL BLANKETS:

1. MATERIAL: Gravel for the blankets shall be pit-run, free-draining, gravelly material containing stones reasonably well-graded from a minimum size of 2 inches to a maximum size of 4 inches. The material shall be free from vegetation, pieces of timber, or other foreign matter.

2. PLACING: Distribute and grade material evenly over the required areas. Compaction will not be required.

2.9.4 CONCRETE PIPE CULVERTS:

1. MATERIAL:

   (1) Concrete Pipe: Reinforced concrete pipe shall conform to ASTM C 76, minimum Class III, with either A or B wall thickness. Pipe shall have either tongue-and-groove ends for packing with mortar or ends designed for use with rubber gaskets conforming to ASTM C 443.

   (2) Flared-End Sections: Shall be steel, cast-in-place concrete, or precast concrete.

      1) Steel end sections shall be galvanized-steel, flared-end sections by Armco Drainage and Metal Products, Inc., P.O. Box 800, Middletown, OH 45043; or equal.

      2) Cast-in-place concrete and precast concrete end sections shall be about 2 feet long, flare out to a width of about 2 feet, and have sidewalls formed to direct the water flow into the pipe drain. Wall and floor sections shall not be less than 2 inches thick for precast concrete and 4 inches thick for cast-in-place concrete.

   (3) Mortar: Mortar for pipe joints and connections to other drainage structures shall be composed of one part by volume of Portland cement and two parts of sand. Portland cement shall conform to ASTM C 150, Type 1A or 11A. Sand shall conform to ASTM C 144.

   Hydrated lime may be added to the mixture of sand and cement in an amount equal to 5 percent of the volume of cement used. Hydrated lime shall conform to ASTM C 207, Type N. The quantity of water in the mixture shall be sufficient to produce a stiff workable mortar, but shall not exceed 7 gallons of water per sack of cement.

2. INSTALLATION:

   (1) General: Trenches shall be excavated in accordance with Section 2.5.6, "Excavation for Trenches". Holes for couplings shall be excavated and the pipe bedded so as to be fully supported over the bottom quarter of the circumference and so as to have uniform bearing for the full length of the pipe, except at joints.

   (2) Joints: Joints shall be made in accordance with the instructions of the pipe manufacturer. Rubber gaskets shall be protected from the sun and heat prior to installation and show no sign of deterioration.

   (3) Backfill: As each section of pipe is laid, backfill material shall be placed and tamped to a depth of 1 foot over the top of the pipe and the remaining backfill placed and compacted in accordance with Section 2.8.1, "Placing and Compacting Backfill".

   (4) Connections: Connection between the pipe and the flared-end section shall be reasonably watertight and the method of coupling approved by the COR.

2.9.5 ROCK WATER CROSSING:

1. LAYOUT, SLOPE, AND LOCATION: The COR will designate the exact location for construction of the water crossing. The water crossing length shall be sufficient to cross the drainage channel at the high water elevation. The water crossing width shall be equal to the roadway width plus a minimum of 6 feet on either side of the roadway. The water crossing will require grading of the stream banks so approach slopes are not greater than 12 percent.

   Water may be present in the stream crossing, and the depth will fluctuate with seasonal water flow. Crossings shall comply with Standard 13 - Environmental Requirements - Section 13.16 “Prevention of Water Pollution”.

   Drawing 01 2005 shows the general shapes and dimensions to which all material is to be placed. It is not intended that special equipment be used to obtain the shapes and dimensions shown, but the shapes and dimensions should be achieved as nearly as practical through careful dumping procedures, travel over the material with haul equipment, and hand methods where necessary.

2. MATERIAL: Rock for the water crossing shall consist of hard, dense, durable, crushed rock fragments or graded stream channel rock.

   (1) Rock material for the lower 18-inch layer of the water crossing and for the upstream and downstream sides of the crossing, on either side of the roadway, shall be reasonably well graded from a minimum of 4 inches to a maximum of 12 inches.

   (2) Rock surfacing material for the upper 6-inch layer of the water crossing shall be reasonably well graded from a minimum of 2 inches to a maximum of 4 inches and shall be placed over the 4-inch to 12-inch rock material as shown on the drawing.

3. PLACEMENT: The stream bed shall be excavated, graded, and shaped prior to receiving the rock and rock surfacing material, as shown on drawing 01 2005.

   The rock and rock surfacing material shall be dumped and distributed, either by mechanical or hand methods, in such a manner as to achieve, as nearly as practical, the thickness and cross section shown on the drawing.

The rock material, when in place, shall be stable and so arranged that no large voids exist between the rocks. Rock surfacing shall be compacted by equipment traveling over the surface.

2.9.6 CONCRETE TRENCH DRAINS:

1. MATERIAL:

   (1) Concrete: Concrete material and reinforcement shall be in accordance with Standard 3 - Concrete.

   (2) Drain Line:

      1) Pipe: PVC sewer pipe and fittings, ASTM D 3034.
      2) Pipe Joints and Fittings: ASTM D 2855.

   (3) Miscellaneous Metalwork:

      1) Trench Grate and Frame: Equal to Catalog No. R-4000 series, heavy-duty trench frame with grated cover as manufactured by Neenah Foundry Company. Specific catalog reference (or equivalent) shall be based on the size requirements of the grates and frames as shown on the drawings. Ductile Iron grates shall be used in place of Gray Iron in those areas that receive loads exceeding 16,000 pounds. Metalwork for trench grates and frames shall be grounded in accordance with Standard 9 - Substation Electrical, Section 9.4.1 "Grounding System".

2. FABRICATION: The quality of fabrication shall be in accordance with Standard 4 - Substation Metalwork and Transmission Line Lattice Structures, Section 4.1.5 "Quality Control".

3. INSTALLATION: Trench grate and frame shall be installed in those locations and as dimensioned as shown on the drawings. Material shall be embedded in concrete, set accurately in position, and held firmly in place until concrete has set.

2.9.7 PRECAST CONCRETE DROP INLETS:

1. GENERAL: Top of concrete elevations for the drop inlets shall be flush with the adjacent finish grade, unless otherwise shown.

2. MATERIAL: Concrete and reinforcement shall be manufacturer's standard. Precast concrete drop inlets, appurtenant metalwork, reinforcement, and other required accessories shall be equal to:

   (1) Miscellaneous Metalwork:

      1) Drop Inlet Grate and Frame: Equal to Catalog No. R-2000 series, frame with grated cover as manufactured by Neenah Foundry Company. Specific catalog reference (or equivalent) shall be based on the size requirements of the grates and frames as shown on the drawings. Weight of grate shall not exceed 135 pounds. Metalwork for grates and frames shall be grounded in accordance with the "Grounding System" paragraph of the "Electrical" Division.

      2) Ladder Safety Post: Ladder-mounted, retractable, galvanized safety post as manufactured by Bilco Company, P.O. Box 1203, New Haven, CT 06505; or equal.

      3) Ladder Rungs: Nonslip galvanized safety rungs, "Rugged Round Rung" as manufactured by Safe-Walk, Inc., P.O. Box 212, Leola, PA 17540; ore equal.

(2) Grout: Grout shall be "nonshrink" and be in accordance with ASTM C 1107 latest revision. Accelerating admixtures, including calcium chloride, shall not be used. Clean sufaces to be grouted, and remove all loose material, dirt, grease, and other foreign substances. Grout shall be mixed and placed in accordance with the manufacturer's recommendations. Water shall not be added to increase grout flowability that has been decreased due to delays.

3. FABRICATION: The quality of fabrication of miscellaneous metalwork shall be in accordance with Standard 4 - Substation Metalwork and Transmission Line Lattice Structures, Section 4.1.5 "Quality Control".

   Galvanizing shall be in accordance with Standard 4 - Substation Metalwork and Transmission Line Lattice Structures, Section 4.1.10 “Galvanizing and Painting”.

4. INSPECTION: Precast concrete drop inlets may be inspected at the place of manufacture or precasting. Notify the COR 2 weeks prior to precasting and furnish location and date of precasting. No precasting shall be performed unless a Western inspector is present or has waived the right for inspection.

SECTION 2.10--FENCING

2.10.1 CHAIN LINK FENCE:

1. GENERAL: Standard chain link fence with gates and guard of three strands of barbed wire is shown on drawings 31 2000 and 31 2038. Ground the fence and gate in accordance with standard drawings 31 1060.

   Openings in the substation fence shall be protected in accordance with the Standard 1 - General Requirements, Section 2.5 "Safety and Health".

2. MATERIAL: Match material in the existing fence as far as practicable with respect to type, size, and gage. Ferrous material shall be zinc-coated.

   (1) Chain Link Fabric: ASTM A 392, 2-inch mesh, 11-gage nominal wire diameter after coating, and 7 feet high.

   (2) Fence Posts, Top rails, and Braces: ASTM F 1083, Schedule 40 steel pipe. Options shall be as shown on drawing 31 2000.

   (3) Gates and Accessories: Except as shown on the drawings, gates and accessories shall be in accordance with ASTM F 900. Gates shall be swing-type with zinc-coated, round tubular frames. The zinc coating shall have an average weight of not less than 1.8 ounces per square foot of coated surface area. Gate fabric shall be the same as the fence fabric.

   Each gate leaf shall be equipped with one pair of hinges that will allow a full gate opening between gate posts. Hinges shall allow the gate to be easily opened and closed by one person, and to swing a full 180 degrees without twisting or binding. Forked latch may be provided for the single gate less than 10 feet wide. Unless otherwise noted on the drawings, latch for double gate shall be of the "Double Gate Leaf Keeper" type or the plunger bar type of full gate height and arranged to engage the center stop. The latch shall have provisions for padlocking. The locking device shall be constructed so that the center drop rod or plunger bar cannot be raised when locked. Gate latch for gate shall be as shown on drawing 31 2001.

   Gate hinges, latches, stops, keepers, and other accessories shall be zinc-coated, steel, ductile iron, or malleable iron except that wire ties, clip bolts, and nuts may be of aluminum alloy. Minimum weight of the zinc coating shall be 1.2 ounces per square foot of surface. Barbed wire guard at the gate top shall be as shown on the drawings.

   (4) Chain Link Fence Accessories: Except as shown on the drawings, fence accessories shall be in accordance with ASTM F 626. Post caps, rail ends, and barbed wire support arms shall be zinc-coated, steel, malleable iron, or ductile iron except that post caps and rail ends may be of cast iron. Rail sleeves, wire ties and clips, clip bolts, nuts, brace bands, tension bands, reinforcing wire, and tension bars shall be zinc-coated, steel except that wire ties, clip bolts, and nuts may be of aluminum alloy. Two 12 1/2-gage twisted, barbless, zinc-coated strands may be substituted for the 7-gage bottom reinforcing wire.

   (5) Zinc-Coated Barbed Wire: Twelve-gage wire with 14-gage, four-point barbs, zinc-coated.

3. ERECTION:

   (1) General: Brush, weeds, and other obstacles which interfere with proper fence erection shall be cleared and removed. Smooth ground irregularities (finished grade) and erect fence so that bottom of fabric is from 1 inch to 3 inches above finished grade at all locations.

   (2) Fence Posts: Perform all required excavating, backfilling, and compacting of backfill for fence posts. Posts shall be plumb, in alignment, and set in concrete as shown on the drawings. Cement quantity shall be not less than 5 1/2 bags per cubic yard of concrete. Placing, curing, and protection of concrete shall be in accordance with Standard 3 - Concrete.

   (3) Damaged Galvanizing: Damaged areas of galvanizing shall be repaired in accordance with the ASTM A 780.

2.10.2 BARBED WIRE FENCE:

1. MATERIAL:

   (1) Line Posts: Painted steel, heavy duty, T-shaped with steel anchors, 7 feet 0 inches in length, 1 3/8 inches x 1 3/8 inches in cross section, and of 1/8-inch-thick material.

   (2) Gate, Corner, and Braced Panel Posts: Well-seasoned cedar or wood pressure treated with preservative. Pressure-treated posts shall be Douglas Fir, Western Larch, Lodgepole Pine, or Southern Yellow Pine. Gate posts shall be at least 7 inches diameter at the top. Corner and braced panel posts shall be 4 inches minimum diameter at top. Corner and braced panel posts shall be 8 feet 0 inches in length.

   (3) Barbed Wire: Galvanized, 12 1/2-gage wire with four-point barbs.

   (4) Stays and Fasteners: ASTM Specifications A121 and A702.

   (5) Nails and Staples: Nails shall be bright, round nails. Staples shall be No. 9-gage galvanized-wire staples, not less than 1 1/2 inches long, and either U- or L-shaped with ringed shanks.

   (6) Gates: Galvanized-steel tubular gate as shown drawing 41 9024. Set gates level and to swing in the direction as directed by the COR.

2. ERECTION: Remove brush and obstacles and level ground surface as required to erect fencing. Conduct all operations as directed by the COR. Existing fencing shall be connected to new fencing by placing a corner post at each junction and fastening the existing and new fence wire to the post. Finished fencing shall be in alignment, taut, solid at all points, and thoroughly braced.

   Set gate, corner, and braced panel posts in 4-foot-deep post holes filled with concrete. Concrete shall contain not less than 5 1/2 bags of Portland cement per cubic yard of concrete.

   Drive steel line posts not less than 3 feet 0 inches below ground surface.

   Space barbed wire strands 8 inches center-to-center, with first strand 16 inches above ground. Wire shall be drawn tight and fastened securely to each post. Staples shall be driven diagonally to the grain of timber posts in a manner to hold wire securely without causing bends or nicks in the wire. Use wire stays to fasten barbed wire to steel posts.

Braced panels in line with fence and corner panels shall have panel posts spaced 8 feet 0 inches center-to-center with 4-inch x 4-inch horizontal wood bracing and cross-wire bracing similar to the gate braced panel shown on drawing 41 9024.

Barbed wire shall be placed on the side of the posts which is away from the substation site. At grade changes where stresses tend to pull posts from the ground, fencing shall be anchored as directed by the COR. Anchors shall consist of a double strand of No. 8-gage wire connecting each barbed wire strand to a "deadman" weighing not less than 100 pounds and buried in the ground not less than 2 feet.

2.10.3 CATTLE GUARDS:

1. DESIGN REQUIREMENTS: Design to support an AASHTO HS20 truck loading, with an allowable average soil pressure not to exceed 1,000 pounds per square foot. The horizontal framework members shall be spaced so as to prevent livestock from walking across the framework. The perimeter of the framework shall be supported by a continuous, reinforced concrete foundation. The framework shall be protected by a reinforced concrete header which is to be a part of the continuous foundation. To facilitate cleaning underneath, provide removable sections which shall fit flush with the surface of the framework. The end wings shall be sloping 45° from end of the steel framework and tie in securely to the adjacent fence.

2. MATERIAL:

   (1) Framework and 45° End Wings: The framework and 45° end wings shall be constructed from standard commercial quality steel members (channels, pipe, light-gauge rails, or other suitable shapes) and galvanized. Galvanizing shall be in accordance with Standard 4 - Substation Metalwork and Transmission Line Lattice Towers, Section 4.1.10 "Galvanizing and Painting". Painting shall be in accordance with the "Standard 12 - Painting.

   (2) Concrete Foundation and Header: Reinforced concrete.

   (3) Anchor Bolts: Anchor bolts, nuts, and washers shall be standard commercial quality, suitable for intended conditions of use.

3. CONSTRUCTION: Perform the required sitework in accordance with Section 2.5, "Excavation" and Section 2.8.1, "Placing and Compacting Backfill". Provide, place, cure, and finish concrete in accordance with the applicable sections of Standard 3 - Concrete. Fabricate, galvanize, and erect steel and other metalwork in accordance with Standard 4 - Substation Metalwork and Transmission Line Lattice Towers.

2.10.4 PERMANENT GATES IN EXISTING BARBED WIRE FENCES FOR TRANSMISSION LINE ACCESS ROADS:

1. MATERIAL: Material shall be in accordance with the details shown on the drawings and the following:

   (1) Barbed Wire Gates: As shown on drawing 41 9002.
   (2) Electric Barbed Wire Gates: As shown on drawing 41 9003.
   (3) Prefabricated Tubular Steel Gates: As shown on drawing 41 9024.

2. INSTALLATION: Install gates in existing fences where directed by the COR.

2.10.5 FENCE GROUNDS FOR TRANSMISSION LINES:

1. MATERIAL: As shown on drawing 41 1011.

2. INSTALLATION:

   (1) General: Install fence grounds in accordance with drawing 41 1011. Drive grounding rods to a depth of not less than 5 feet. Fasten fence wires securely to grounding rods with U-bolt clamps.

   (2) Nonelectric Fences on Wood or Concrete Posts and Electric Fences: Ground with one grounding rod at hinge end of gates and one for each 1/8 mile of fence.

   (3) Nonelectric Fences on Metal Posts: Ground with one grounding rod for each 1/4 mile of fence.

   (4) Metallic Gates: Bond electrically to fence in accordance with drawing 41 9024.

   (5) Fences Crossing Under Line: Ground with one grounding rod on each side of right-of-way.

SECTION 2.11--SURFACING

2.11.1 GRAVEL SURFACING:

1. MATERIAL: Gravel surfacing material shall conform to the requirements for Type I, Gradation B, surface-course material, ASTM D 1241, with the following exceptions:

   (1) 100 percent shall pass the 1 1/2-inch screen.

   (2) 75-90 percent shall pass the 1-inch screen.

   (3) Minimum of 8 percent shall pass the No. 200 sieve in lieu of the minimum percentage shown in Table 1.

   (4) Fraction passing the No. 40 sieve shall have a maximum liquid limit of 35 and plasticity index range from 4 to 9 in lieu of the limits specified for fine aggregate. Liquid limit and plasticity index testing shall be in accordance with ASTM D 4318, Method A (Wet Preparation).

   (5) Minimum of 50 percent of material retained on the No. 4 screen shall have a minimum of one fractured face.

2. PLACING: Prior to placing, the subgrade shall be free from depressions and soft spots and conform to grades shown on the drawings. Gravel surfacing shall not be placed until the subgrade has been approved by the COR. Gravel surfacing thickness shall be greater than or equal to the thickness shown on the drawings after being compacted.

   Place, moisten, compact, and test gravel surfacing in accordance with Section 2.7.1, "Compacting Earth Material", with the following exceptions:

   (1) For gravel surfacing with more than 50 percent of the material passing the No. 4 screen, the density shall not be less than 90 percent.

   (2) For gravel surfacing with 50 percent or more of the material retained on the No. 4 screen, the density shall not be less than 85 percent.

   (3) Prior to and during compaction operations, the material shall have a moisture content of plus or minus 3 percent of optimum moisture.

   Surfaces of gravel surfacing shall be free from corrugations and waves.

2.11.2 REPLACING AND PROTECTING GRAVEL SURFACING:

1. GENERAL: REPLACING GRAVEL SURFACING: Replace existing gravel surfacing from removed areas. Add gravel surfacing required due to removing or cutting off existing concrete foundations, removing existing drains, and removing existing chain link fence. Existing gravel surfacing may be excavated separately in required excavation areas and reused if injurious amounts of earth, organic matter, and other deleterious material is removed prior to reuse.

   Before gravel surfacing is replaced or added, grade subgrade to conform to the required elevations and compact loose and disturbed material. Fill depressions in the subgrade with backfill material and compact in accordance with Section 2.8.1, "Placing and Compacting Backfill". Do not use gravel surfacing material for filling depressions.

   Provide additional gravel surfacing in accordance with Section 2.11.1, "Gravel Surfacing". Gravel surfacing shall be the same thickness as the existing adjacent gravel surfacing.

2. PROTECTING GRAVEL SURFACING: Protect existing gravel surfacing and subgrade in areas where equipment will operate. Use planking or other suitable material designed to spread the equipment loads to prevent damage.

   Repair damage to existing gravel surfacing and subgrade where such damage is due to the Contractor's operations. Grade and compact damaged subgrade areas as described in subsection a. above before replacing gravel surfacing. Damaged gravel surfacing shall be restored to match the adjacent undamaged gravel surfacing and be the same thickness.

2.11.3 SOIL-APPLIED HERBICIDE:

1. GENERAL: Provide a broad spectrum, nonselective, soil-applied herbicide and submittals in accordance with Section 2.1.1.5 “Soil-Applied Herbicide”.

2. HERBICIDE APPLICATOR'S QUALIFICATIONS: The applicator shall be a dedicated industrial (noncrop) applicator with 2 years' experience applying commercial bare-ground, residual herbicides. Herbicide contractor shall be currently certified to apply herbicides for industrial (noncrop) weed control or rights-of-way.

3. REGULATIONS: Regulations and procedures are provided Standard 13 – Environmental Quality Protection – Section 13.11 “Pesticides”.

4. MATERIAL:

   (1) General: Soil-applied herbicides shall be of broad spectrum, nonselective type with a high residual soil activity. Herbicides shall be nonstaining and nonvolatile if applied in the vicinity of nontarget plants such as landscaping or field crops. Legible labels shall be maintained on all containers.

   (2) Storage: Herbicides shall not be stored on Government property without prior written approval from the COR. If the COR allows storage of herbicides, it shall be for no more than a 2-week period and in strict accordance with the storing of hazardous waste requirements of the applicable State Health and Safety Code and the COR's instructions.

5. APPLICATION:

   (1) General: Apply in strict accordance with the herbicide manufacturer's instructions and all Federal, State, and local codes and regulations. Soil-applied herbicide shall not be applied until the gravel surfacing has been placed.

   (2) Weather Conditions: Apply herbicides only during periods of favorable weather conditions so that a major rainstorm, or rapid snow melt, does not occur and create surface runoff. If favorable weather conditions cannot be ensured, temporarily block drainage pipes through the fence, or other effective means as approved by the COR, to contain herbicide runoff inside the yard. Do not apply herbicide when winds could cause drifting of sprayed herbicide.

   (3) Protective Equipment: The Contractor shall determine if personal protective equipment and other health and safety related equipment is required for performing the work covered by this section. The Contractor shall furnish all required equipment and ensure his employees use it. The Contractor shall provide all required medical monitoring, health physicals, and record keeping.

6. DAMAGE: Existing vegetation such as landscape plants, gardens, and field crops which, in the opinion of the COR, are damaged by the application of the soil-applied herbicide shall be replaced by the Contractor at his expense.

7. RELEASE OF HAZARDOUS SUBSTANCES: If a reportable release of hazardous substance occurs at the work site, the Contractor shall immediately notify the COR and all environmental agencies, as required by law. The Contractor shall be responsible for the cleanup.

8. WARRANTY: If vegetation occurs in the gravel surfaced area within 1 year following final acceptance of the work, the Contractor shall return and reapply herbicide as directed by the COR.

SECTION 2.12--LANDSCAPING

2.12.1 SEEDING:

1. GENERAL: Seeding operations shall be undertaken only after the seeded areas will not be disturbed by other Contractor operations.

2. MATERIAL:

   Percent pure live seed shall be determined by the following formula:

   $$\text{Percent pure live seed} = \frac{\text{Percent of purity x percent of germination}}{100}$$

   Seed and seeding mixtures shall be free of prohibited noxious weed seed, quack grass (Agropyron repens), and Johnson grass (Sorghum halepense); not exceed the limits for restricted noxious weed seed; and not contain more than 4 percent of other weed seed. Prohibited and restricted noxious weeds are those classified by the State Seed Department.

   Seed containers shall be sealed and labeled to comply with State seed laws and regulations or in accordance with U.S. Department of Agriculture Rules and Regulations under the Federal Seed Act, if shipped in Interstate Commerce. For Montana, North Dakota, and South Dakota seed shall have been grown in the North American continent above 41° North latitude. Seeds shall be a standard grade adapted to State conditions.

   Different grass species shall be separately packaged and labeled so they can be uniformly and thoroughly mixed after receipt at the job site.

   If regrading is required, Western will test the soil in areas to be seeded after grading is complete. Based on the soil analysis, Western will determine the recommended fertilizer analysis and spread rate for fertilizer to be used.

   (1) Mulching Material: Dry hay or straw free from noxious weeds or foreign matter detrimental to plant life.

   (2) Protective Cover: Light, pervious burlap; jute matting; or standard commercial erosion net material which will protect against erosion and rapid moisture evaporation without preventing germination of seed or growth of grass.

   (3) Water: Free of matter harmful to plant growth.

3. PREPARATION:

   (1) Remove foreign material, stones, plants, and debris from areas to be seeded.

   (2) Protect existing underground improvements from damage.

   (3) Cultivate soil to a depth of 3 inches. Repeat cultivation in areas where equipment has compacted soil. The topsoil surface shall be relatively smooth with no ruts, furrows, or depressions that may cause erosion.

4. APPLICATION:

   (1) Fertilizing during seeding is acceptable provided the equipment is designed to evenly distribute fertilizer at the rate specified.

(2) Seeding: Provide uniform stands of grass on seeded areas. Reseed bare areas to obtain uniform stands.

Do not use wet seed or seed which is moldy or otherwise damaged. Do not sow immediately following rain, when ground is too dry, or during windy periods. Do not seed area in excess of that which can be mulched on same day.

1) Drill Seeding: Regulate drill to uniformly distribute seed and cover with soil to a depth not to exceed 1/2 inch. Dry fertilizer may be applied simultaneously with the drilling of seed if the drill is equipped with an attachment which will evenly distribute fertilizer at the rate specified.

2) Hydroseeding: Prepare slurry mixture immediately prior to application. Do not use slurry mixtures prepared more than 1 hour prior to application. Maintain uniform mixture of seed, fertilizer, and water. Cover seed with soil to a depth not to exceed 1/2 inch.

3) Mechanical or Hand Broadcasting: Method is acceptable for areas inaccessible to large equipment provided wind velocities permit uniform distribution of material. Cover seed with soil to a depth not to exceed 1/2 inch.

4) Mulching: Apply mulch to seeded areas and crimp into soil within 24 hours after seeding.

5) Slope Protection: For slopes steeper than 2:1, apply protective cover. Roll cover down over slopes without stretching or pulling. Bury top end of each section in narrow 6-inch trench.

   Overlap 12 inches minimum from top roll over bottom roll. Overlap 4 inches minimum over adjacent section. Lightly dress slopes with topsoil to ensure close contact between cover and soil. In ditches, unroll cover in direction of flow. Overlap ends of strips 6 inches minimum with upstream section on top.

6) Maintenance: Water, mow, and apply weed control chemicals until date of final acceptance of work. The Contractor shall obtain uniform stands of grass on all seeded areas, reseeding bare areas as often as necessary to obtain uniform stands. Water to ensure uniform seed germination. Apply water slowly so that surface of soil will not puddle. Reseed and maintain damaged areas showing root growth failure, deterioration, bare spots, and eroded areas. Provide additional topsoil, where necessary, including areas affected by erosion.

SECTION 2.13--ASPHALT PAVING

2.13.1 GENERAL:

1. QUALITY ASSURANCE:

   (1) Material and Producer: Supply source of asphalt paving material shall be approved by the COR before delivery.

   (2) Testing Laboratory: Shall meet the qualifications of ASTM D 3666.

2. MATERIAL:

   (1) Aggregate for Paving Courses: ASTM D 1073 for fine aggregate and ASTM D 692 for course aggregate; maximum nominal diameter 3/4 inch.

   (2) Gravel Base: ASTM D 2940.

   (3) Tack Coat: ASTM D 2397 for emulsified asphalt CSS-1H grade.

3. MIX DESIGN: The mix design shall meet the following requirements for Marshall Series ASTM D 1559 or Hveem Stabilometer ASTM D 1560:

   (1) Marshall Series:

   Minimum Stability, lbs.: 1,200
   No. of Blows: 50
   Flow, .01 in.: 8 to 16
   Air Voids %: 3.0 to 5.0% range, 4% target
   Minimum VMA %: 14 (bulk specific gravity of aggregate)

   (2) Hveem Stabilometer:

   Minimum Stabilometer Value: 35
   Maximum Swell (inches): 0.030
   Minimum Air Voids, %: 3.0 to 5.0% range, 4% target

4. BATCHING AND MIXING:

   (1) Comply with ASTM D 995 for material storage, control, mixing, and plant equipment and operation.

   (2) Aggregates: Deliver dry aggregate to mixer at recommended temperature to suit penetration grade and viscosity characteristics of asphalt, ambient temperature, and mixture work ability.

   (3) Mixing: Mix aggregates and asphalt to achieve coated particles in accordance with ASTM D 2489.

   (4) Transporting: Provide covers over mixture when transporting during rainy or cold weather. Mix shall be delivered at no less than 300°F.

5. TESTING: An approved testing laboratory shall be employed by the Contractor to perform asphalt paving tests. Obtain test samples in accordance with ASTM D 979. Perform tests as follows:

   (1) Bitumen Extraction: ASTM D 2172. One test per 500 tons or fraction thereof.

(2) Gradation Analysis: ASTM C 117 and ASTM C 136. One test per 500 tons or fraction thereof.

(3) Marshall Series ASTM D 1559 or Hveem Stabilometer ASTM D 1560: One test per 1,000 tons or fraction thereof.

(4) Density: ASTM D 2950.

(5) Bulk Specific Gravity and Compacted Density: ASTM D 2726. Two tests per 500 tons. Any fraction thereof will require one test.

6. PREPARATION OF SUBGRADE: Subgrade shall be compacted to a density of 95 percent of maximum dry density in accordance with Section 2.7.1 “Compacting Earth Material”. Before final rolling, shape entire section, and compact subgrade to provide grades, elevations, and cross section indicated on the drawings. Compact areas adjacent to structures and other areas not accessible to rollers with mechanical or hand tamping devices.

7. PLACING OF GRAVEL BASE:

(1) Place untreated aggregate base when the air temperature is above 30°F and rising.

(2) Spread untreated aggregate base material over prepared subgrade to compacted depth and grades shown on the drawings.

(3) Compact and moisten untreated aggregate base at optimum moisture content, ±1.5 percent to achieve a minimum density of 95 percent of maximum laboratory density in accordance with ASTM D 1557.

8. CONDITIONING OF ADJOINING SURFACES:

Construct structures adjacent to proposed asphalt pavement prior to placement of pavement. Surfaces in contact with the asphalt pavement shall be painted with a uniform tack coat prior to placing asphalt pavement.

9. SPREADING AND COMPACTING ASPHALT PAVING:

(1) General: Spread and compact asphalt paving in accordance with the "Spreading" and "Compaction" sections in Asphalt Institute Manual Series No. MS-8, "Asphalt Paving".

(2) Weather: Construct paving courses when air temperature is above 40°F, underlying base is dry, and weather is not rainy.

(3) Protection: Protect buildings and other facilities from asphalt splatter. Do not discharge unused paving material on the site.

(4) Compaction: Asphalt paving shall be compacted to a minimum of 93 percent of theoretical maximum specific gravity in accordance with ASTM D 2041.

Do not allow vehicular traffic on newly paved areas until surface has cooled to air temperature.

Ensure surface of completed pavement is true to lines, profiles, and elevations indicated, and is free from depressions.

10. TOLERANCES: After placement, asphalt paving shall be within the following tolerances:

(1) Thickness of Asphalt Paving Courses: ±1/4 inch.

(2) Smoothness of Asphalt Paving Courses: Free from depressions exceeding 1/4 inch when measured with a 10-foot straight-edge.

11. PAVEMENT MARKING MATERIAL: Material used shall be equal to Pro-Mar Water Borne Traffic Paint by Sherwin Williams Company; PPG Traffic and Zone Marking Paint by PPG Industries, Inc., Coatings and Resins; or Traffic Zone Paint by ICI Americas Inc./Glidden Company. Color shall be white or yellow.

    Paint stripes for parking lanes shall be 4 inches wide and sprayed or brushed at locations shown on the drawings. Provide handicap symbols in accordance with the International Symbol System. Spray or brush stripes at crosswalks and stop signs. Surface of pavement shall be thoroughly cleaned and dust free before painting.

2.13.2 ASPHALT PAVING RECYCLING:

1. GENERAL: Dispose of existing asphalt paving in accordance with Standard 13 – Environmental Quality Protection, Section 13.8 "Disposal of Waste Material". Recycled asphalt paving shall meet the requirements in Section 2.13.1, "Asphalt Paving, General".

2. HOT MIX RECYCLING: In accordance with Asphalt Institute Manual Series No. MS-20.

3. COLD MIX RECYCLING: In accordance with Asphalt Institute Manual Series No. MS-21.

2.13.3 GEOTEXTILE FABRIC:

Geotextile fabric shall be a woven, polypropylene fabric equal to Propex 2002 Construction Fabric by Amoco Fabric Company, 550 Interstate North Parkway, Atlanta GA 30099. Geotextile fabric shall be black and have a fill tensile strength not less than 200 pounds, fill elongation not more than 20 percent, burst strength not less than 450 psi, and puncture strength not less than 75 pounds. Install geotextile fabric in accordance with manufacturer's instruction.

Western
AREA POWER
ADMINISTRATION

CONSTRUCTION STANDARDS

STANDARD 3
CONCRETE

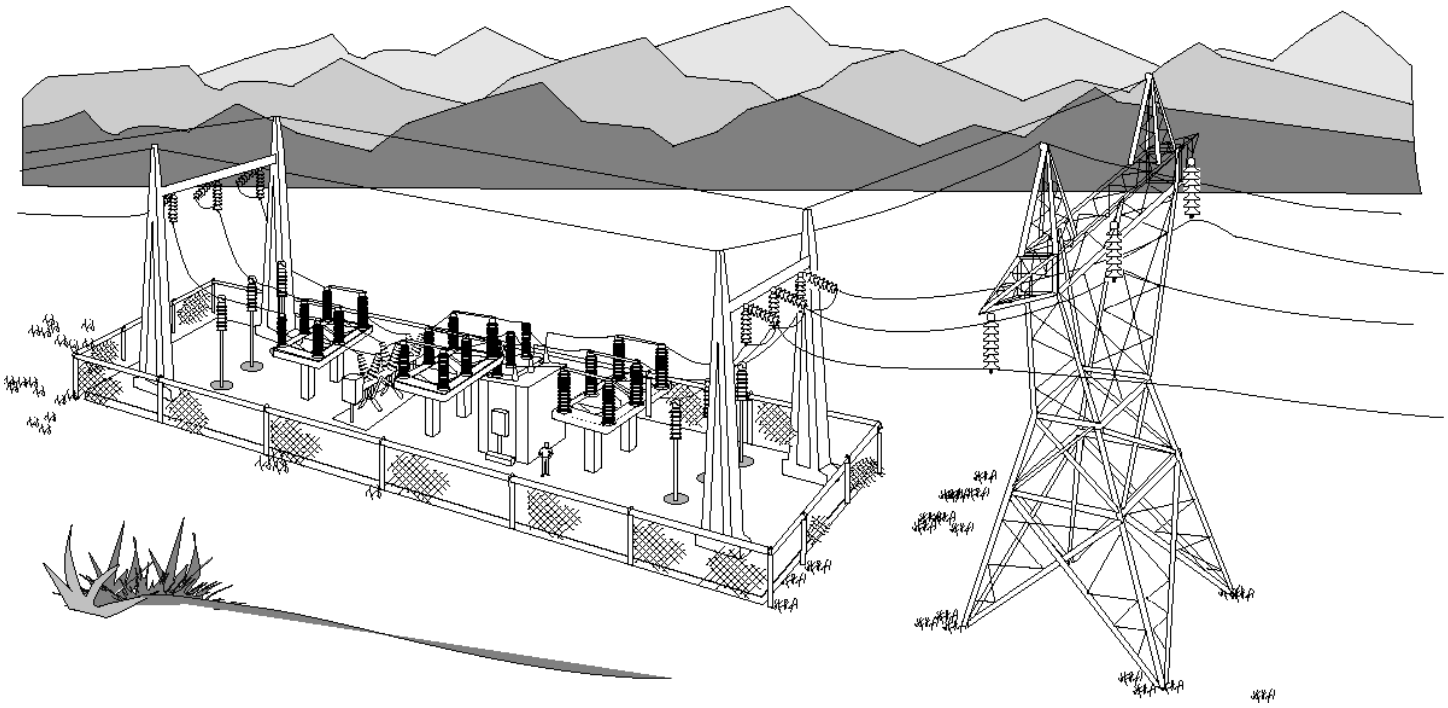

July 2009

SAFETY
A HABIT TO LIVE BY

TABLE OF CONTENTS

Page Number

SECTION 3.1--CONCRETE REQUIREMENTS 4

3.1.1 GENERAL CONCRETE REQUIREMENTS AND CONTRACTOR-FURNISHED TESTS AND DATA 4
1. General 4
2. Contractor-Furnished Tests and Data 4
3. Testing 4
4. Material 5
5. Mix Design 6
6. Fly Ash 7
7. Admixtures 7

3.1.2 BATCHING AND MIXING 7
1. General 7
2. Mixing Requirements 7
3. Certification 7

3.1.3 REINFORCEMENT 7
1. General 7
2. Reinforcement Supports 7
3. Bar-Placing Diagrams, Bar Lists, and Bar-Bending Diagrams 7
4. Inspection 8
5. Fiberglass Reinforcing Bars 8

3.1.4 FORMS, PREPARATION, PLACING, AND FINISHING 8
1. Forms 8
2. Void Forming Material 8
3. Preparation 8
4. Placing 8
5. Finishing 9

3.1.5 JOINTS AND EDGES IN CONCRETE 9
1. Construction Joints 9
2. Expansion Joints 10
3. Tooled Edges 10
4. Chamfered Edges 10
5. Control Joints 10

3.1.6 PROTECTION AND CURING 10
1. Protection 10
2. Curing Concrete Foundations 11
3. Curing Building Concrete 11
4. Water Curing 11
5. Curing Compound 11
6. Polyethylene Film 11

3.1.7 CONCRETE REPAIR 11
1. General 11
2. Material 11

3.1.8 CONCRETE CONSTRUCTION TOLERANCES 12
1. General 12
2. Foundations, Footings, and Structures 12
3. Variation from Plumb or Specified Batter for Lines and Surfaces of Augers, Piers, Stems, and Walls 12
4. Variation from Level or Specified Grades for Foundation Slabs and Grade Beams 12
5. Variation from Level or Specified Grades for Building Slabs and Top Of Building Foundation . 13
6. Variation in Cross-Sectional Dimensions of Augers, Piers, Grade Beams, and Stems from Those Specified and in Thicknesses of Slabs and Walls from Those Specified 13
7. Variation from Specified Grade or Alignment for Cable Trenches 13
8. Variation of Overall Horizontal Building Dimensions at Floor Level from Specified Position in Plan 13
9. Variation of Floor Openings 13
10. Concrete Backfill for Direct-Embedded Steel Pole 13
11. Repair of Concrete Not Within Tolerances 13
12. Prevention of Repeated Failure to Meet Tolerances 13

3.1.9 DRILLING AND GROUTING ANCHOR BARS 13

3.1.10 GROUTING MORTAR 14
1. Grouting Mortar 14
2. Preparation and Placing 14

SECTION 3.2--SUBSTATION CONCRETE CONSTRUCTION 15

3.2.1 CONTRACTOR-FURNISHED DRAWINGS AND DATA 15
1. General 15
2. Drawings and Data for Design of Electrical Equipment Foundations 15
3. Approval Drawings for Precast Cable Trench 15
4. Approval Drawings for Precast Concrete Pull Boxes 16
5. Final Drawings for Precast Cable Trenches and Precast Pull Boxes 16

3.2.2 PRECAST CONCRETE CABLE TRENCH 16
1. Material 16
2. Trench Covers 16
3. Inspection 16

3.2.3 OIL DETENTION STRUCTURE 16
1. Material 16
2. Fabrication 17
3. Installation 17

3.2.4 PRECAST CONCRETE PULL BOXES 18
1. General 18
2. Material 18
3. Pull Box Covers 18
4. Pull Box Ladders 18

SECTION 3.3--TRANSMISSION LINE CONCRETE CONSTRUCTION 19

3.3.1 LATTICE TOWER FOOTINGS 19
1. General 19
2. Stub Angles 19
3. Frame Stub Tees 19

SECTION 3.4--COMMUNICATION FACILITIES CONCRETE CONSTRUCTION 20

3.4.1 COMMUNICATION FACILITIES FOUNDATIONS 20
1. General 20

3.4.2 CONTRACTOR-FURNISHED DRAWINGS AND DATA 20
1. General 20
2. Changes 20
3. Units of Measurement 20
4. Design Calculations and Data 20
5. Approval Drawings 20
6. Final Approval Drawings 20
7. Final As-Built Drawings 21
8. Mailing Address 21

3.4.3 DESIGN REQUIREMENTS 21
1. General 21
2. Design Loadings 21
3. Structural Analysis and Design 21

SECTION 3.1--CONCRETE REQUIREMENTS

3.1.1 GENERAL CONCRETE REQUIREMENTS AND CONTRACTOR-FURNISHED TESTS AND DATA:

1. GENERAL: Provide concrete in accordance with ACI 318 and this Section.

2. CONTRACTOR-FURNISHED TESTS AND DATA:

   (1) Testing Laboratory: Submit name and qualifications of testing laboratory to the COR for approval at least 20 days prior to placing concrete.

   (2) Mix Design: Submit each mix design to the COR for review at least 10 days prior to use.

   (3) Cement: Submit manufacturer's certification that cement meets the requirements of ASTM C 150 at least 10 days prior to use.

   (4) Aggregate: Submit data showing that sand and coarse aggregate meet the requirements of ASTM C 33. Submit data, including source location and potential reactivity test results, prior to obtaining aggregate.

   (5) Fly Ash: Submit test data conforming to ASTM C 311 to the COR at least 20 days prior to use.

   (6) Admixtures and Curing Compound: Submit brand name and manufacturer for admixtures and curing compound to the COR at least 10 days prior to use. Submission of manufacturer's test data and certification of compliance with these specifications may be required.

   (7) Batch Certificate: Submit batch certificate, including batch weights or volumes and time of batching, with each batch of concrete delivered. Submit to the COR at the job site.

   (8) Test Reports: Submit reports for slump, air-entrainment, and compression tests to the COR immediately after completion. Reports shall specify location of concrete placement for each batch of concrete from which tests were taken.

   (9) Void Forming Material: Submit two copies of the manufacturer's installation instructions to the COR prior to use.

   (10) “Nonshrink” Grout: Submit report from testing laboratory verifying performance requirements shown in Table 1 of ASTM C 1107.

3. TESTING: An approved testing laboratory, meeting the requirements of ASTM E 329, shall be employed by the Contractor to perform concrete tests. The field personnel performing concrete tests shall be ACI certified. Perform tests as follows:

   (1) Slump Test: ASTM C 143.

   (2) Air-Entrainment Test: ASTM C 231.

   (3) Compression Test Cylinders: ASTM C 31, a set of three cylinders for each compression test.

   (4) Compression Tests: ASTM C 39. Test one cylinder at 7 days and two cylinders at 28 days.

(5) Test for Potential Reactivity of Sand and Coarse Aggregate: ASTM C 295 and all additional investigations that may be required to evaluate any adverse properties that are discovered by the test performed.

(6) Test Frequency: Perform a minimum of one slump, air-entrainment, and compression test per week or one per 50 cubic yards of concrete placed, as directed by the COR.

(7) Samples: Use samples for each test from the same batch of concrete. Include the unit weight and concrete temperature with the test report.

(8) Acceptance Criteria for Compression Tests: ACI 318.

4. MATERIAL:

(1) Cement: ASTM C 150, including the low-alkali and false-set limitations.

(2) Water: ASTM C 94.

(3) Sand: ASTM C 33 for fine aggregate.

(4) Coarse Aggregate: ASTM C 33 gradings for either size No. 467 (1 1/2 inch to No. 4 United States standard sieve), size No. 57 (1 inch to No. 4), or size No. 67 (3/4 inch to No. 4).

(5) Fly Ash: ASTM C 618 with the following additional requirements:

1) Maximum percent of sulfur trioxide is 4.0 percent for Classes F and C.
2) Maximum percent loss on ignition is 2.5 percent for Classes F and C.
3) For Class F or C fly ash with Type II cement, the "R" factor shall be less than 2.5.
4) Determine calcium and ferric oxide contents in accordance with ASTM C 114.

(6) Air-Entraining Admixture: ASTM C 260.

(7) Water-Reducing and Retarding Admixtures: ASTM C 494, Type A or D.

(8) Reinforcing Bars: ASTM A 615/A 615M, Grade 60, deformed bars.

(9) Fiberglass Reinforcing Bars: "REBAR" by IMCO Reinforced Plastics, Inc., P.O. Box 534, Morristown, NJ 08057; or equal.

(10) Fabric: ASTM A 185 REV A or A497, electrically welded wire fabric.

(11) Wax-Base Curing Compound: ASTM C 309, Type 2, Class A.

(12) Clear Resin-Base Curing Compound With Fugitive Dye: ASTM C 309. Type 1-D, Class B.

(13) Clear Resin-Base Curing Compound Without Fugitive Dye: ASTM C 309, Type 1, Class B.

(14) Polyethylene Film: ASTM C 171, 4 mils thick.

(15) Void Forming Material: Chemically treated void forming material equal to "Sure-Void" forms by Falcon Manufacturing Company, 1865 West Dartmouth, Englewood, CO 80110.

5. MIX DESIGN: Mix design shall comply with ACI 211.1 and the following:

(1) Slump: Shall not exceed:

1) When First Mixed: 4 inches.
2) When Placed: 2 inches for slabs and 3 inches for all other concrete.

(2) Minimum Cement Content for 3,000 psi Concrete:

Maximum Size Aggregate	Minimum Cement Content Without Water-Reducing Admixture	Minimum Cement Content With Water-Reducing Admixture
1 1/2 inch	525 lb/yd^3	510 lb/yd^3
1 inch	575 lb/yd^3	555 lb/yd^3
3/4 inch	610 lb/yd^3	595 lb/yd^3

(3) Minimum Cement Content for 4,000 psi Concrete:

Maximum Size Aggregate	Minimum Cement Content Without Water-Reducing Admixture	Minimum Cement Content With Water-Reducing Admixture
1 1/2 inch	565 lb/yd^3	535 lb/yd^3
1 inch	620 lb/yd^3	585 lb/yd^3
3/4 inch	660 lb/yd^3	625 lb/yd^3

(4) Minimum Cement Content for 5,000 psi Concrete:

Maximum Size Aggregate	Minimum Cement Content Without Water-Reducing Admixture	Minimum Cement Content With Water-Reducing Admixture
1 1/2 inch	625 lb/yd^3	550 lb/yd^3
1 inch	675 lb/yd^3	600 lb/yd^3
3/4 inch	700 lb/yd^3	625 lb/yd^3

6. FLY ASH: Fly ash shall be used to replace cement. Weight of fly ash shall not exceed 20 percent of the total cementitious material required; e.g., (fly ash weight/(fly ash weight + cement weight)) x 100 equal to or less than 20. Exceptions to its use are listed in Standard 13 – Environmental Quality Protection.

7. ADMIXTURES: Air-entraining admixture shall be used in such amount as will effect the entrainment of from 4 to 6 percent of air, by volume, of concrete as discharged from mixer.

   Accelerating admixtures, including calcium chloride, shall not be used.

3.1.2 BATCHING AND MIXING:

1. GENERAL: Concrete shall be batched and mixed in accordance with one of the following:

   (1) Ready-Mixed Concrete: ASTM C 94.
   (2) Concrete Made By Volumetric Mixing and Continuous Batching: ASTM C 685.

2. MIXING REQUIREMENTS: Mixing time shall be sufficient to thoroughly mix concrete, but over mixing requiring the addition of water to preserve required consistency will not be permitted. Truck mixers, if used, shall be in good mechanical condition, including the mixing fins, so that the concrete, when placed, will be uniform throughout.

3. CERTIFICATION: Each batch of concrete delivered shall be accompanied by a written certificate containing the batch ticket information required by either ASTM C 94 or ASTM C 685.

3.1.3 REINFORCEMENT:

1. GENERAL: Place steel reinforcing bars and fabric in concrete where shown on the drawings. Reinforcement shall be accurately placed and secured in position to prevent movement during concrete placement. Welding or tack-welding of reinforcing bars and anchor bolts made from reinforcing bars shall not be permitted, except at locations shown on the drawings. Clean reinforcement of heavy, flaky rust; loose mill scale; dirt; grease; and other foreign substances. Place reinforcement to meet the following tolerances:

   (1) Amount of concrete cover protecting reinforcement shall not deviate from that specified on drawing 01 2004 by more than 1/2 inch if the specified cover is more than 2 1/2 inches, nor by more than 1/4 inch if the cover specified is 2 1/2 inches or less.

   (2) Spacing of reinforcing bars shall not deviate from the required spacing by more than 1 inch. Vertical bars shall be equally spaced unless otherwise shown on the drawings.

   (3) Unless otherwise shown on the drawings, reinforcement shall be placed so that there will be a clear distance of at least 1 inch between the reinforcement and anchor bolts, form ties, or other embedded metalwork.

   (4) Spacing of #18J reinforcing bar anchor bolts shall not deviate from the specified by more than 1/8 inch.

2. REINFORCEMENT SUPPORTS: Where portions of reinforcement supports will be exposed, supports shall be galvanized or of corrosion-resistant material, except that concrete supports will not be permitted.

3. BAR-PLACING DIAGRAMS, BAR LISTS, AND BAR-BENDING DIAGRAMS: Western will not furnish supplemental bar-placing diagrams, bar lists, and bar-bending diagrams. Supplemental diagrams and bar lists of this type required to facilitate the fabrication and placement of reinforcement shall be provided by the Contractor. Cost of preparing supplemental diagrams and

bar lists, if provided, shall be at the Contractor's expense. Bar-placing diagrams, bar lists, and bar-bending diagrams prepared by the Contractor shall conform to the requirements shown on drawing 01 2004.

4. INSPECTION: Reinforcement will be inspected for compliance with size, shape, spacing, length, splicing, position, and amount after it has been placed.

5. FIBERGLASS REINFORCING BARS: Fiberglass reinforcing bars shall be bent in the factory. Bars cut in the field shall be sealed in accordance with the manufacturer's instructions.

3.1.4 FORMS, PREPARATION, PLACING, AND FINISHING:

1. FORMS: Forms shall be sufficiently tight to prevent mortar loss from concrete and maintained rigidly in position until concrete has hardened sufficiently to prevent damage by form removal.

   Forms for exposed portions of augered foundations shall be held rigidly in place. Sonotubes and light-gage sheet metal will not be allowed.

2. VOID FORMING MATERIAL: Install void forming material in accordance with the manufacturer's installation instructions. Prior to installation, submit two copies of the manufacturer's instructions to the COR. Exercise care in placing void forming material and protect the material against damage during subsequent construction operations.

3. PREPARATION:

   (1) Foundation Surfaces: Foundation surfaces upon or against which concrete will be placed shall be free from standing water, mud, and debris. Concrete required to be extended into rock shall be placed in direct contact with the rock for a depth not less than shown on the drawings. Earth foundations shall be free from frost and ice when concrete is placed upon or against them. Surfaces of absorptive foundations against which concrete will be placed shall be moistened thoroughly so that moisture shall not be drawn from freshly placed concrete.

   (2) Construction Joint Surfaces: Surfaces of construction joints shall be clean, rough, and surface dry when covered with fresh concrete. Clean by removing laitance, loose and defective concrete, coatings, sand, curing compound if used, and other foreign material. Surfaces of construction joints shall be wet sandblasted or bush-hammered, washed thoroughly, and thoroughly surface dried prior to placing adjoining concrete. A mortar layer shall not be used on concrete construction joints.

4. PLACING:

   (1) Place concrete in accordance with ACI 301. Place concrete in hot or cold weather in accordance with ACI 305R or ACI 306R, respectively.

   (2) Prevent segregation of concrete ingredients and slump loss in excess of 2 inches.

   (3) Do not drop concrete more than 6 feet, unless confined by closed chutes or pipes. Do not use aluminum chutes, pipes, or buckets.

   (4) Do not retemper concrete.

   (5) Place concrete in continuous, horizontal layers not exceeding 20 inches deep; properly vibrate each layer before additional concrete placement.

   (6) Concrete temperature during placement shall be between 50 and 90°F.

(7) Ensure that reinforcement, inserts, embedded parts, and formed joints are not disturbed during concrete placement.

(8) Maintain minimum concrete cover around reinforcement.

(9) Place concrete continuously between predetermined construction and control joints.

(10) Vibrate concrete until consolidated to maximum practicable density. Concrete shall be free of pockets of aggregate ("Honeycombs").

(11) Place concrete under water in accordance with ACI 304R.

5. FINISHING: Finish surfaces in accordance with ACI 301.

(1) BUILDING CONCRETE: After the concrete has been placed, struck off, consolidated, and leveled, provide the following finishes:

1) Troweled Finish: For floors as walking surfaces, control room subfloor, top of foundation wall at exterior door thresholds, or surfaces which will be left exposed.

2) Broom Finish: For equipment and entry slabs.

3) Sloping Floors: Maintain level floor at walls and pitch surface uniformly to low point as shown on the drawings.

4) Exposed, Unformed Surfaces at Metalwork: Finish surfaces to be in contact with cable entry covers so that metalwork does not rock.

5) Concrete Floor Hardener: Apply in accordance with manufacturer's instructions. Cure concrete as required for application of floor hardener. Apply to all interior concrete slabs, including the subfloor for the access flooring system. Concrete floor hardener equal to Lapidolith Chemical Floor Hardener by Sonneborn Building Products, Chem Rex Inc., 7711 Computer Avenue, Minneapolis, MN 55435-5494.

(2) FOUNDATIONS:

1) Rough Form Finish: For all concrete surfaces not exposed to view.

2) Smooth Form Finish: For all concrete surfaces exposed to view and where other finishes are not specified.

3) Surfaces of cast-in-place concrete upon which cable trench covers rest shall be brought to level, uniform surfaces and given a steel-trowel finish such that the trench covers will lie flat without rocking.

4) Exposed, unformed surfaces of other concrete shall be brought to level, uniform surfaces and worked with suitable tools to a reasonably smooth wood-float, broom, or steel-trowel finish as directed or specified.

5) Concrete in tops of foundations in which stub angles are embedded shall be sloped to provide drainage away from the stub angles.

3.1.5 JOINTS AND EDGES IN CONCRETE:

1. CONSTRUCTION JOINTS: Location of construction joints shall be as shown on the drawings or as directed by the COR. Bond is required at a construction joint regardless if reinforcement is

continuous across the joint. Construction joints shall be constructed in accordance with Section 3.1.4, "Forms, Preparation, Placing, and Finishing".

2. EXPANSION JOINTS:

   (1) General: Construct expansion joints as shown on the drawings. Joints shall be clean of laitance, coatings, and other detrimental material.

   (2) Joint Filler: Place preformed bituminous joint filler in all expansion joints. Joint filler shall cover the entire surface of the concrete at the joint and be laid against the completed side of the joint and held rigidly in place while concrete is placed on the other side of the joint. Joints in joint filler shall be tight-fitting butt joints.

   (3) Dowel Bars: Install dowel bars in concrete at expansion joints as shown on the drawings. Hold dowels firmly in place while concrete is placed on one side of the joint. Exposed end of each dowel bar shall be coated with grease and fitted with an expansion cap to prevent bond before concrete is placed on the other side of the joint.

   (4) Material:

      1) Preformed Bituminous Joint Filler: ASTM D 994, 1/4-inch thick, unless noted otherwise on the drawings.

      2) Dowel Bars: ASTM A36.

      3) Expansion Caps: Either metal or paper caps.

3. TOOLED EDGES: Top edges of cast-in-place Type C cable trenches, cable entry boxes, expansion joints, concrete foundations, and other edges of concrete where directed by the COR shall be finished neatly with an edging tool. Radius of curvature of tooled edges shall not be greater than 1/4 inch.

4. CHAMFERED EDGES: Chamfer edges of permanently exposed cast-in-place concrete surfaces in accordance with drawing 01 2004 and service building drawings.

5. CONTROL JOINTS: Saw cut joints to a depth of 1 inch, unless noted otherwise on the drawings.

3.1.6 PROTECTION AND CURING:

1. PROTECTION: Protect concrete against damage until final acceptance as follows:

   (1) Temperature Protection: Protect concrete against freezing temperatures by keeping it at a temperature not lower than 50°F for at least 72 hours after it is placed. Water-cured concrete shall be protected against freezing temperatures for duration of the curing period, and a temperature of not less than 50°F shall be maintained for 72 hours following discontinuance of water curing. Where artificial heat is employed, take special care to vent heaters and prevent concrete from drying.

   (2) Construction Activity Protection: Concrete and concrete curing compound shall be protected against construction activities by covering with plywood, sand, or other suitable material. After danger of damage has ended, remove protective coverings and dispose of waste material in accordance with Standard 13 – Environmental Quality Protection, Section 13.8 "Disposal of Waste Material".

2. CURING CONCRETE FOUNDATIONS:

   (1) Surfaces of construction joints, and surfaces on which grouting mortar is placed, shall be cured with water or wax-base curing compound or by covering with polyethylene film.

   (2) Other concrete shall be cured with water or wax-base curing compound, resin-base curing compound with fugitive dye, or by covering with polyethylene film.

   (3) If concrete is cured with curing compound, all surfaces of concrete upon which equipment or metalwork will be grouted in place shall be cleaned thoroughly of curing compound by wet sandblasting or bush-hammering.

3. CURING BUILDING CONCRETE: Cure concrete in service building with water or by covering with polyethylene film.

4. WATER CURING: Concrete shall be kept continuously moist for at least 14 days after being placed by sprinkling or spraying or by other methods approved by the COR. Water temperature shall be within plus or minus 20°F of the concrete temperature.

5. CURING COMPOUND:

   (1) General: Apply curing compound promptly after form removal. Formed surfaces shall be saturated with a fine spray of water until they will absorb no more water. Apply compound as soon as free moisture on the surface has disappeared. On unformed surfaces, apply compound immediately after bleeding water or shine disappears, leaving a dull appearance. The minimum curing period shall be 7 days prior to placing loads on the foundation or structure.

   (2) Application: Apply curing compound with a pressure-tank-type sprayer or a conventional pressure-pot or airless-type sprayer. Apply curing compound to a uniformly thick film using multipass or cross spraying. Delay between passes shall not exceed 30 minutes. Maximum coverage rates shall not exceed 150 square feet per gallon for wax-base and 200 square feet per gallon for resin-base curing compounds.

6. POLYETHYLENE FILM: When concrete has hardened sufficiently to prevent damage, thoroughly moisten by spraying lightly with water and then completely cover with polyethylene film to provide an airtight, water-retaining film over the entire concrete surface for at least 14 days. Edges of polyethylene strips shall be lapped to effect a seal to adjacent strips and, at extreme edge of the curing area, held tightly against concrete surface. Secure polyethylene film to withstand wind and prevent circulation of air inside the film.

3.1.7 CONCRETE REPAIR:

1. GENERAL: Remove and replace concrete that is damaged or defective; concrete that is honeycombed or fractured; and concrete that must be excavated and built up to bring the surfaces to prescribed lines. Correct surface imperfections and irregularities. Repair damaged or defective concrete and correct surface imperfections and irregularities as soon as practicable after form removal and before curing compound is applied.

2. MATERIAL: Repair with concrete, dry pack, cement mortar, epoxy-bonded concrete, or epoxy-bonded epoxy mortar, as applicable for type of repair involved, in accordance with Bureau of Reclamation "Standard Specifications for Repair of Concrete".

3.1.8 CONCRETE CONSTRUCTION TOLERANCES:

1. GENERAL: Tolerances are allowable variations from specified lines, grades, and dimensions and allowable surface irregularities. Allowable variations from specified lines, grades, and dimensions are listed below.

   Finish concrete and set and maintain concrete forms within the listed tolerances. Concrete work that exceeds the tolerances shall be repaired or removed and replaced.

   Plus or minus variations indicate a permitted actual position up or down and in or out from the specified position. Variations not designated as plus or minus indicate the maximum deviation permitted between designated successive points on the completed element of construction.

2. FOUNDATIONS, FOOTINGS, AND STRUCTURES:

   (1) Variation in length and width dimensions from those specified, except for building foundation walls: -1/2 inch and +2 inches. Variation in length and width of building foundation walls: -1/4 inch and +1/4 inch.

   (2) Horizontal misplacement or eccentricity: 2 percent of foundation width in the direction of misplacement but not more than 2 inches.

   (3) Reduction in thickness from that specified: 5 percent of specified thickness but not more than 2 inches.

   (4) Variation from specified elevation for top of concrete, except building foundations: ±1/2 inch. Variation from specified elevation for top of concrete building foundations: ±1/4 inch.

3. VARIATION FROM PLUMB OR SPECIFIED BATTER FOR LINES AND SURFACES OF AUGERS, PIERS, STEMS, AND WALLS:

   (1) When overall height of line or surface is:

      1) 10 Feet or Less: ±1/4 inch.
      2) More Than 10 Feet: ±3/8 inch.

   (2) For any two successive intermediate points on the line surface separated by:

      1) 10 Feet: 1/4 inch.
      2) 20 Feet or More: 3/8 inch.

4. VARIATION FROM LEVEL OR SPECIFIED GRADES FOR FOUNDATION SLABS AND GRADE BEAMS:

   (1) When overall length of line or surface is:

      1) 10 Feet or Less: ±1/4 inch.
      2) 10 to 20 Feet: ±3/8 inch.
      3) More Than 20 Feet: ±3/4 inch.

   (2) For any two successive intermediate points on the line or surface separated by:

      1) 10 Feet: 1/4 inch.
      2) 20 Feet or More: 3/8 inch.

5. VARIATION FROM LEVEL OR SPECIFIED GRADES FOR BUILDING SLABS AND TOP OF BUILDING FOUNDATION: ±1/4 inch.

6. VARIATION IN CROSS-SECTIONAL DIMENSIONS OF AUGERS, PIERS, GRADE BEAMS, AND STEMS FROM THOSE SPECIFIED AND IN THICKNESSES OF SLABS AND WALLS FROM THOSE SPECIFIED: -1/4 inch and +1/2 inch.

7. VARIATION FROM SPECIFIED GRADE OR ALIGNMENT FOR CABLE TRENCHES:

   (1) When overall length is:

      1) 10 Feet or Less: ±1/4 inch.
      2) 10 to 20 Feet: ±3/8 inch.
      3) More Than 20 Feet: ±3/4 inch.

   (2) For any two intermediate points separated by:

      1) 10 Feet: 1/4 inch.
      2) 20 Feet or More: 3/8 inch.

8. VARIATION OF OVERALL HORIZONTAL BUILDING DIMENSIONS AT FLOOR LEVEL FROM SPECIFIED POSITION IN PLAN: ±1/4 inch per 100-foot length with maximum for entire length of ±1 inch.

9. VARIATION OF FLOOR OPENINGS:

   (1) Variation in location from specified position in plan of sleeves and other floor openings: ±1/2 inch.

   (2) Variation in size from those specified for sleeves and other floor openings: ±1/4 inch.

10. CONCRETE BACKFILL FOR DIRECT-EMBEDDED STEEL POLE:

   (1) Concrete Projection: 18 inches ±3 inches.
   (2) Concrete Cover for Fabric: 3 inches -0 inches and +1 inch.

11. REPAIR OF CONCRETE NOT WITHIN TOLERANCES: Repair hardened concrete which is not within specified tolerances in accordance with Section 3.1.7, "Concrete Repair". Repair to bring concrete within tolerances shall be done only after consultation with the COR regarding the method of repair. Notify the COR of the time repair will be performed.

   Repair concrete exposed to view to ensure a concrete surface with a uniform appearance. Grinding of exposed concrete surfaces shall be limited in depth so that no aggregate particles are exposed more than 1/16 inch in cross section at the finished surface. Where grinding has caused or will cause exposure of aggregate particles greater than 1/16 inch in cross section at the finished surface, repair by excavating and replacing concrete.

12. PREVENTION OF REPEATED FAILURE TO MEET TOLERANCES: When concrete placements result in hardened concrete that does not meet specified tolerances, submit to the COR an outline of all preventative actions, such as modifications to forms, modified procedure for setting screens, and different finishing techniques to be implemented to avoid repeated failures. Western may delay concrete placements until the Contractor implements approved preventative actions.

3.1.9 DRILLING AND GROUTING ANCHOR BARS:

Dimensions and locations of anchor bars and drill holes shall be as shown on the drawings.

Anchor bars shall be reinforcing bars as shown on the drawings. Reinforcing bars and water used in the grout shall be in accordance with Section 3.1, "Concrete Requirements".

Grout shall be "nonshrink" and be in accordance with ASTM C 1107. Accelerating admixtures, including calcium chloride, shall not be used. The grout shall not cause corrosion of the anchor bar.

Clean drill holes of loose material and clean anchor bars of flaky rust, loose mill scale, dirt, grease, and other foreign substances.

Grout shall be mixed and placed in accordance with the manufacturer's recommendations. Water shall not be added to increase grout flowability that has been decreased due to delays.

Insert the anchor bar in the hole and fill the hole with grout. The Contractor shall demonstrate that the drill hole is completely filled with grout and that the anchor bar is either centered in the hole or has a minimum of 3/4 inches of grout around it for its entire length.

3.1.10 GROUTING MORTAR:

1. GROUTING MORTAR: Grouting mortar shall be composed of cement, water, and sand. Cement, water, and sand shall be as specified in Section 3.1, "Concrete Requirements", except use sand passing a No. 16 screen when clearances prevent use of the specified grading. Mix grouting mortar in proportion of 1 part Portland cement to 2 1/2 parts sand, by weight, and to approved consistency.

2. PREPARATION AND PLACING:

   (1) Preparation: Before placing mortar, roughen base concrete surfaces and remove laitance, loose and defective concrete, curing compound, and other foreign material. After cleaning, thoroughly wash with water.

   (2) Placing: Place mortar so as to completely fill spaces adjacent to equipment and metalwork as shown on the drawings. Remove shims and grout the remaining spaces.

   (3) Curing: Cure exposed surfaces of mortar for 72 hours by keeping covered with moist burlap or dampened sand.

   Do not apply loads to the mortar sooner than 72 hours after placement. Apply loads only after the mortar has attained a compressive strength of 3,000 psi. Time required for the mortars used to attain this strength will be determined by the COR. Care shall be taken when applying loads on hardened mortar. The Contractor shall be responsible for any damage resulting from impact loads when positioning equipment or metalwork.

SECTION 3.2--SUBSTATION CONCRETE CONSTRUCTION

3.2.1 CONTRACTOR-FURNISHED DRAWINGS AND DATA:

1. GENERAL: Use United States standard units of measurement and English words, signs, and symbols. Drawings shall be thoroughly checked for accuracy and completeness before submittal. Western will not review details and intermediate dimensions.

   Western will provide comments to the drawings and data. Change the details which Western determines necessary to make the finished construction conform to these specifications.

   Western's review time is specified in the Division 1 – General Requirements, paragraph "Commencement, Prosecution, and Completion of Work ". Western review shall not relieve the Contractor from meeting the specifications requirements nor the responsibility for drawing and data correctness. Precasting, fabrication, and installation of precast concrete cable trench and precast pull boxes prior to drawing and data review will be at the Contractor's risk.

2. DRAWINGS AND DATA FOR DESIGN OF ELECTRICAL EQUIPMENT FOUNDATIONS: Submit two copies of the following to the Civil Engineer and send a copy of the transmittal letter to the COR:

   (1) Equipment outline, dimensions, and weights.

   (2) Base type, dimensions, and mounting details.

   (3) Location, types, sizes, and projections of required embedded anchor bolts.

   (4) Location and size of required openings in the floors for conduits.

   (5) Impact loading for the oil-type circuit breaker.

   (6) Orientation of all equipment and a complete anchor bolt setting plan.

   (7) Size and location of jacking pads for transformer.

   (8) Pole spacing for circuit breaker.

   (9) Seismic qualification report, for equipment specifications requiring a seismic qualification report.

   (10) Overall equipment cabinet dimensions, including height above equipment base.

3. APPROVAL DRAWINGS FOR PRECAST CABLE TRENCH: Prior to precasting, submit two copies of the following to the Civil Engineer and send a copy of the transmittal letter to the COR:

   (1) Complete details of the precast concrete cable trench, vehicular crossing, special sections, appurtenant metalwork, covers, and grounding cables.

   (2) Marking and position of each piece.

   (3) A complete bill of material.

   (4) Controlling dimensions and appropriate substation reference lines.

   (5) Size, type, and grade of reinforcement and concrete strength.

4. APPROVAL DRAWINGS FOR PRECAST CONCRETE PULL BOXES: Prior to precasting, submit for review two copies of the following drawings and data to the Civil Engineer and a copy of the transmittal letter to the COR:

   (1) Complete details of the precast concrete pull box, appurtenant metalwork, grounding cables.

   (2) Marking and position of each piece.

   (3) A complete bill of material.

   (4) Controlling dimensions and appropriate substation reference lines.

   (5) Size, type, and grade of reinforcement and concrete strength.

   (6) Certifications and/or calculations showing that the pull boxes are designed for the adjacent surcharge loading.

5. FINAL DRAWINGS FOR PRECAST CABLE TRENCHES AND PRECAST PULL BOXES: Prior to material shipment, furnish final drawings. The drawings shall show changes and revisions made up to the time material is shipped. Forward two copies of the drawings to the COR. Forward by certified mail, final drawings and a copy of the COR's transmittal letter to the Civil Engineer.

3.2.2 PRECAST CONCRETE CABLE TRENCH:

1. MATERIAL: Concrete and reinforcement shall be manufacturer's standard. Precast concrete cable trench, special sections, appurtenant metalwork, reinforcement, and other required accessories shall be equal to:

   (1) "Trenwa" precast cable trench by Trenwa Products, Inc., 1419 Alexandria Pike, Fort Thomas, KY 41075; or

   (2) "Fibercrete Trench System" by Concast, Inc., 1010 North Star Drive, Zumbrota, MN 55992.

2. TRENCH COVERS:

   (1) Aluminum and steel covers: Provide covers in accordance with the requirements shown on the cable trench drawings and Standard 4 - Substation Metalwork and Transmission Line Lattice Structures, Section 4.2 "Miscellaneous Metalwork". Ground covers in accordance with Standard 9 - Substation Electrical, Section 9.2.1 "Grounding System".

   (2) Concrete covers: Weight shall not exceed 85 pounds each. Furnish required special tools for removing concrete covers. If concrete covers are used, provide brackets or clips inside trench walls just underneath the cover to support No. 4 AWG copper ground wire. Connect ground cables to grounding grid.

3. INSPECTION: Precast concrete cable trench may be inspected at the place of manufacture or precasting. Notify the COR 2 weeks prior to precasting and furnish location and date of precasting. No precasting shall be performed unless a Western inspector is present or has waived the right for inspection.

3.2.3 OIL DETENTION STRUCTURE:

1. MATERIAL:

   (1) Concrete: Concrete material and reinforcement shall be in accordance with the Section 3.1, "Concrete Requirements".

(2) Miscellaneous Metalwork:

1) Structural Steel: ASTM A 36/A 36M.

2) Structural Steel Tubing: ASTM A 500, Grade B.

3) Expansion Anchors: Unless otherwise indicated on the drawings, expansions anchors shall be Hilti Kwik Bolt II, or equal, with a minimum diameter of 5/8-inch and a minimum embedment length of 7 inches.

4) Arc-Welding Electrodes: Use matching weld metal in accordance with AWS D1.1, except that the minimum tensile strength for Group I filler metal shall be 70 ksi.

5) Bolts and Nuts: Bolts: ASTM A 307. Nuts: ASTM A 563, Grade A.

6) Aluminum Covers and Aluminum Hold-Down Angles: Material, fabrication, and installation shall be in accordance with Standard 4 - Substation Metalwork and Transmission Line Lattice Structures, Section 4.2.1, "Aluminum Covers."

7) Ladder Safety Post: Ladder-mounted, retractable, galvanized safety post as manufactured by Bilco Company, P.O. Box 1203, New Haven, CT 06505; or equal.

8) Ladder Rungs: Nonslip safety rungs, equal to "Rugged Round Rung" as manufactured by Safe-Walk, Inc., P.O. Box 212, Leola, PA 17540.

(3) Drain Line:

1) Pipe: PVC sewer pipe and fittings, ASTM D 3034.

2) Pipe Joints and Fittings: ASTM D 2855.

3) Shutoff Valve: Gate-type valve, 6-inch cast iron, 150 pounds, bronze trim, and 2-inch-square wrench nut in accordance with AWWA C500-86. Provide valve box, cover, and handwheel.

4) Waterstop: Standard commercial quality PVC-type waterstop.

5) Seep Ring: Standard commercial quality.

2. FABRICATION: The quality of metalwork fabrication shall be in accordance with Standard 4 - Substation Metalwork and Transmission Line Lattice Structures, Section 4.1.5 "Quality Control".

Shearing and cutting by torch or electrical arc shall be finished neatly on material exposed to view. After fabrication, material shall be straight and true and free from kinks, twists, and warps. If straightening is necessary, no metal damage shall result. Ladders shall be fabricated with standard butt-welding fittings and joints equal in appearance to joints made with shaped nipples. Welds on ladders shall be ground smooth.

Hot-dipped galvanizing shall be in accordance with the provisions of ASTM A 123 and A 153.

3. INSTALLATION: Install construction and control joints where shown on the drawings. Install embedded and nonembedded metalwork for frames, ladders, grating, hold-down devices, expansion anchors, bolts, nuts, and accessory material.

Embedded metalwork shall be set accurately in position and supported rigidly to prevent displacement during concrete placement. The Contractor shall drill, or drill and tap holes, in metalwork as required for installation.

Galvanized material shall be hauled and handled with care to avoid damage to the galvanized coating. Rope, cable, or chain slings shall not be used for handling the material, but canvas slings not less than 12 inches in width may be used.

Damage to galvanized coatings shall be repaired in accordance with ASTM A 780, except that the coating thickness shall be a minimum of 3.0 mils. Material that is damaged beyond repair shall be replaced. Damaged material shall be removed from the work site.

The PVC drain line shall be installed in accordance with the pipe manufacturer's instructions, a copy of which shall be furnished to the COR.

Excavation and compacted backfill shall be in accordance with the applicable sections of Standard 2 - Sitework.

3.2.4 PRECAST CONCRETE PULL BOXES:

1. GENERAL: Pull boxes shall have removable provisions for conduit entry. The minimum inside dimensions shall be as shown on the electrical drawings.

   Structural design shall include a surcharge truck loading of AASHTO HS20 a maximum of 2 feet from the pull box.

   Pull boxes shall be installed on a 6-inch-thick layer of compacted gravelfill and have a top of concrete projection of approximately 6-inches above finish grade.

   Pull boxes with inside depths exceeding 48-inches shall be furnished with ladder.

2. MATERIAL: Concrete and reinforcement shall be manufacturer's standard. Precast concrete pull box, covers, pulling hooks, and other required accessories shall be equal to pull boxes manufactured by Brooks Products, Inc., 14221 San Bernardino Avenue, Fontana, CA 92335 or Utility Vault Company, Inc., P.O. Box 610, Chandler, AZ 85244-0610.

3. PULL BOX COVERS: Covers shall be aluminum or galvanized steel, designed for sidewalk class traffic, and of a size and weight permitting removal by one person. Weights shall not exceed 85 pounds each. Covers shall be secured to pull boxes by "Hex-Head"-type bolts, and supplied with all hardware necessary for securing and removing, including lifting handles, if required.

   Covers shall be grounded as shown on the electrical drawings.

   Paint aluminum covers in contact with concrete with commercial grade bituminous paint to produce a 5-mil minimum thickness.

4. PULL BOX LADDERS: Pull box ladders shall be firmly affixed to pull box walls and shall be equal to Model PS2-PF, as manufactured by M. A. Industries, P.O. Box-2322, 303 Dividend Drive, Peachtree City, GA 30269.

SECTION 3.3--TRANSMISSION LINE CONCRETE CONSTRUCTION

3.3.1 LATTICE TOWER FOOTINGS:

1. GENERAL: Type of footing to be constructed at each tower site shall be as directed by the COR, based on the most economical footing meeting the criteria shown on the "Design, Selection, and Quantities" drawings, and will be determined by the COR during work progress. Western reserves the right to change footing type where conditions during work progress reveal that another footing type is more suitable.

   Towers with transverse frames require two footings for each transverse frame with steel stub tees embedded in reinforced concrete. Other towers each require four footings with steel stub angles embedded in reinforced concrete. Place footings for each tower in a tangent section of line so that the tower cross arm axis is perpendicular to the alignment. Unless otherwise directed by the COR, place footings for each angle tower so that the tower cross arm axis will bisect the interior angle formed by intersection of adjacent line sections.

   Footings with a tapered circular section may be constructed with a constant circular section provided the largest diameter of tapered section is used and there is no additional cost to Western.

2. STUB ANGLES: Place stub angles in accordance with Standard 4 - Substation Metalwork and Transmission Line Lattice Structures, Section 4.1.12 "Erection." Vertical reinforcement bars and stubs shall be bonded electrically by reinforcement bars welded to both as shown on the drawings.

3. FRAME STUB TEES: Attach stub tees to the frames prior to placement of concrete in footings. Attach stub tees to the leg tees using connection holes or erection holes as shown on the drawings. Hold stub tees and frames by a suitable device to prevent displacement during concrete placement. Vertical reinforcement bars and stub tees shall be bonded electrically by reinforcement bars welded to both as shown on the drawings. Allow concrete cure at least 7 days before removing erection bolts and completing the stub tee to frame connection shown on the drawings.

SECTION 3.4--COMMUNICATION FACILITIES CONCRETE CONSTRUCTION

3.4.1 COMMUNICATION FACILITIES FOUNDATIONS:

1. GENERAL: Design and construct reinforced concrete foundations required for microwave tower or microwave monopole, waveguide supports, and climbing ladder.

3.4.2 CONTRACTOR-FURNISHED DRAWINGS AND DATA:

1. GENERAL: Before beginning concrete construction, furnish approval and final approval drawings and data for all Contractor-designed foundations. These drawings and data must be approved prior to any construction. Refer to the contract clause titled "Specifications and Drawings for Construction" for additional requirements.

2. CHANGES: Make all changes in Contractor-furnished drawings, designs, or construction details which Western determines necessary to make the finished construction conform to these specifications. Revise the drawings to reflect all changes.

3. UNITS OF MEASUREMENT: Units of measurement shall be in United States Standard units; and all wording, signs, symbols, and other designations shall be in English.

4. DESIGN CALCULATIONS AND DATA: Submit, for approval, two copies of the following design calculations and data for each Contractor-designed foundation:

   (1) Soil-loading properties, based on the geological investigation included in these specifications, used for design and complete foundation design calculations.

   (2) All forces transmitted from the tower or monopole to the foundation.

   (3) Concrete dimensions.

   (4) Reinforcement size, spacing, and location.

   (5) Size and locations of embedded material.

5. APPROVAL DRAWINGS: Submit two 11-inch x 17-inch or 8 1/2-inch x 11-inch prints of drawing showing the following information for each Contractor-designed foundation:

   (1) Dimensions.

   (2) Description, yield strength, size, quantity, and location of the steel reinforcement.

   (3) Twenty-eight-day strength of concrete.

   (4) Size, description, quantity, and location of embedded anchors and other embedded metalwork.

   (5) Western specifications number, bid item number, and revision dates.

   (6) Western job title.

6. FINAL APPROVAL DRAWINGS: Prior to concrete placement, furnish reproductions of all drawings listed in subparagraph f. above. The drawings shall show all changes and revisions, with revision dates, made up to the time of concrete placement.

7. FINAL AS-BUILT DRAWINGS: Before final payment is made under the contract, deliver to Western the originals or photo mylars of all drawings listed in subparagraph f. above, with all revisions found necessary to correct errors or reflect changes made during field construction.

8. MAILING ADDRESS:

   (1) Calculations, Data, and Approval Drawings:

      1) Send a copy of calculations, data, and drawings to the Civil Engineer
      2) Send a copy of the transmittal letter to the COR.

   (2) Final Approved Drawings:

      1) Send to Civil Engineer
      2) Send a copy of the transmittal letter to the COR.

   (3) Final As-Built Drawings: Send by certified mail to the Civil Engineer

3.4.3 DESIGN REQUIREMENTS:

1. GENERAL: The design and drawing of the foundations shall be supervised and certified by a registered Professional Engineer competent in structural analysis and foundation design.

2. DESIGN LOADINGS: Design the concrete foundations to be reliable and serviceable and to resist without permanent distortion or displacement all loading conditions determined by the structural analysis specified in subparagraph c. below.

3. STRUCTURAL ANALYSIS AND DESIGN:

   (1) GENERAL: Design concrete tower foundations to withstand the maximum of all loads transmitted to them from the tower or monopole, including overload factors. The tower foundations shall be designed to carry these maximum loads multiplied by 1.15, without exceeding the ultimate strength of the foundation. Design foundations for ultimate strength in accordance with the assumptions and requirements as given in "Building Code Requirements for Reinforced Concrete", ACI 318-89.

   (2) UPLIFT: Foundations in uplift shall be designed with an overload factor of 2.The computed unit stresses under full design loads, including overload factors, shall not exceed the following:

      1) For Concrete: 85 percent of its 28-day (4,000 psi) strength.
      2) For Reinforcement: Specified yield strength of the steel.

   (3) DETAILS OF DESIGN: All self-supporting tower foundations shall be suitable for the structure type, loading, and soil conditions. Top of foundations shall be a minimum of 2 inches and a maximum of 15inches above final grade. Anchor bolts outside of reinforcement will not be permitted.

Western
AREA POWER
ADMINISTRATION

CONSTRUCTION STANDARDS

STANDARD 4

SUBSTATION METALWORK AND TRANSMISSION LINE LATTICE STRUCTURES

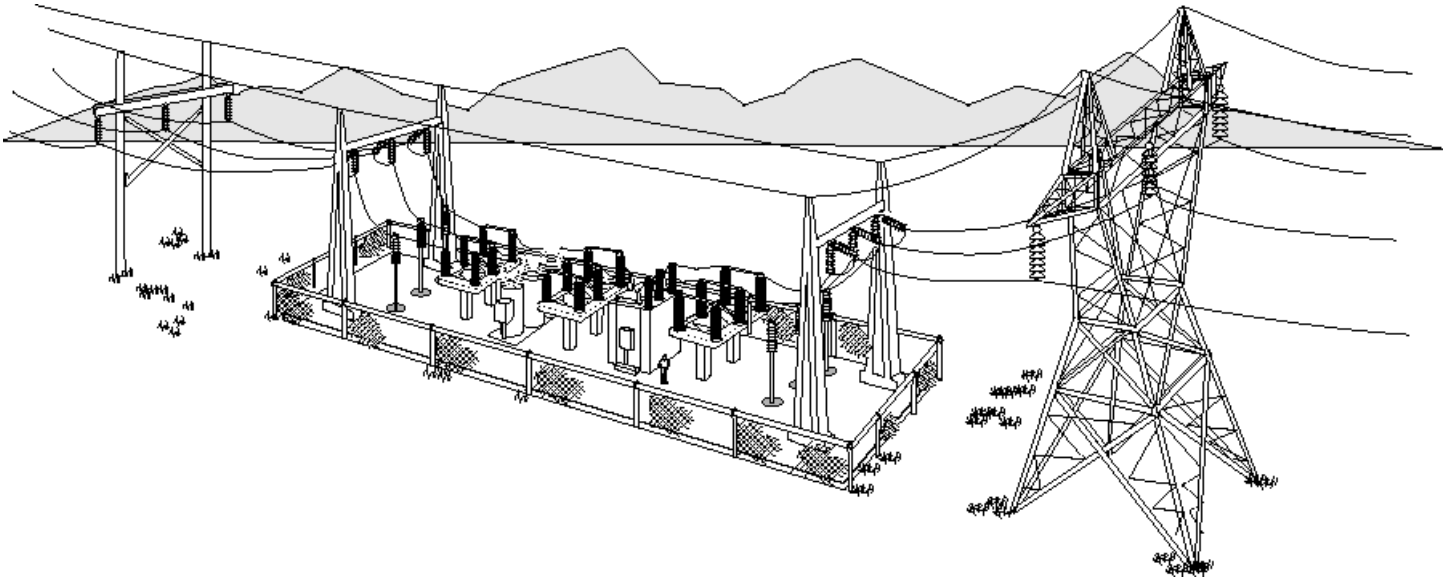

SAFETY
A HABIT TO LIVE BY

July 2009

STANDARD 4 - SUBSTATION METALWORK AND TRANSMISSION LINE LATTICE STRUCTURES

TABLE OF CONTENTS

Page Number

SECTION 4.1--METAL STRUCTURES 6

4.1.1 CONTRACTOR-FURNISHED DATA AND DRAWINGS 6
1. General 6
2. Approval Drawings for Steel Structures and Modification Steel 6
3. Approval Drawings and Data for Oil Storage Tanks 7
4. Final Drawings for Steel Structures, Modification Steel, and Oil Storage Tanks 7
5. Welding 7
6. Connection Bolts 7
7. Mill Test Reports 7
8. Dulling Surface Treatment For Galvanizing 8
9. Test Towers 8

4.1.2 MATERIAL 8
1. Structural Steel 8
2. Structural Aluminum 8
3. Connection Bolts, Washers, and Nuts for Lattice Structures and Towers 8
4. Connection Bolts, Washers, and Nuts for Structures, Except Lattice Structures and Towers 9
5. Washers 9
6. Locknuts 9
7. Grating 9
8. Expansion Anchors 9
9. Adhesive Anchors 9
10. Step Bolts And Nuts 9
11. Eyebolts 9
12. Steel Pipe 9
13. Arc-Welding Electrodes 9
14. Headed Shear Connectors 9
15. Steel Cable 9
16. Steel Cable Hardware 9

4.1.3 DESIGN DETAILS FOR GOVERNMENT-FURNISHED DRAWINGS 9
1. Member Sizes 9
2. Details 9
3. Bolts, Nuts, And Ring Fills 10
4. Forged Hangers 10

4.1.4 DESIGN DETAILS FOR CONTRACTOR-FURNISHED DRAWINGS 10
1. General 10
2. Double-Angle Members 10
3. Long Tension Members 10
4. Lattice Structures And Towers 10
5. Welded (Galvanized or Painted) Structures 12

4.1.5 QUALITY CONTROL 12
1. General 12
2. Workmanship and Defective Material 12
3. Inspection and Tests 12

4.1.6 FABRICATION 12
1. General 12
2. Straightening Material 13

3. Shearing and Cutting 13
4. Holes 13
5. Punching 13
6. Reaming and Drilling 13
7. Punching, Reaming, and Drilling Accuracy 13
8. Base Plates 13
9. Compression Joints 13
10. Cold Forming 13
11. Dimensional Tolerances for Steel 13
12. Welding for Steel 14
13. Welding for Aluminum 14

4.1.7 NONDESTRUCTIVE AND METALLOGRAPHIC WELD TESTS 14
1. General 14
2. Visual Inspection 14
3. Ultrasonic and Radiographic Tests for Complete Penetration Welds 14
4. Ultrasonic and Metallographic Tests for Partial Penetration Welds 14
5. Magnetic Particle and Dye Penetrant 15

4.1.8 MARKING 15

4.1.9 SHOP ASSEMBLY 15
1. General 15
2. Assembly 15

4.1.10 GALVANIZING AND PAINTING 15
1. Cleaning 15
2. Plate and Shape Galvanizing 15
3. Vent and Drain Holes 16
4. Hardware Galvanizing 16
5. Straightening After Galvanizing 16
6. Galvanizing Repair 16
7. Dulling Surface Treatment 16
8. Painting 16

4.1.11 HANDLING AND TRANSPORTING 16

4.1.12 ERECTION 17

4.1.13 RELOCATING, MODIFYING, AND STORING STEEL STRUCTURES AND TOWERS 18
1. General 18
2. Relocating Structures 18
3. Modifying Structures 18
4. Storing Structures 18

4.1.14 TOWER TEST 18
1. Test Towers 18
2. Test Load Application and Measurement 18
3. Test Procedures 19

SECTION 4.2--MISCELLANEOUS METALWORK 20

4.2.1 ALUMINUM COVERS 20
1. Material 20
2. Fabrication 20
3. Installation 20

4.2.2 STEEL COVERS 20
1. Material 20
2. Fabrication 20
3. Installation 20

SECTION 4.3--TANKS 21

4.3.1 OIL STORAGE TANKS 21
1. Requirements 21
2. Required Accessories 21

SECTION 4.1--METAL STRUCTURES

4.1.1 CONTRACTOR-FURNISHED DATA AND DRAWINGS:

1. GENERAL: Drawings shall be new originals. Copies of specifications or Government-furnished drawings are not acceptable. Use United States standard units of measurement and English words, signs, and symbols.

   Data and drawings shall be thoroughly checked for accuracy and completeness before submittal. Western will not check details and intermediate dimensions.

   Submit drawings as they are completed and checked for one or several structures rather than delaying to include drawings for the complete specifications requirement in one submittal.

   Western will return one copy of each drawing and data sheet marked to indicate required changes and approved or not approved. Change the details which Western determines necessary to make the finished construction conform to these specifications.

   Western's review time is specified in the project specifications in the "Commencement, Prosecution, and Completion of Work" paragraph of Division 1, “General Requirements”. Western approval shall not relieve the Contractor from meeting the specifications requirements nor the responsibility for drawing correctness. Fabrication prior to drawing approval will be at the Contractor's risk.

2. APPROVAL DRAWINGS FOR STEEL STRUCTURES AND MODIFICATION STEEL: Prior to fabrication, submit two copies of approval drawings covering the steel structures and modification steel to the Civil Engineer. Send a copy of the transmittal letter to the COR.

   Approval drawings for steel structures listed in the metalwork requirements of the project specifications are not required, provided the bills of materials on the Government-furnished drawings show the total black weight of the required steel to be furnished for each structure. If these bills of materials are incorrect, new bills of materials shall be submitted for approval. The drawings to be furnished shall include:

   (1) Shop detail drawings of anchor bolts and embedded material, including a complete bill of materials for all structures, except lattice towers.

   (2) Shop detail drawings of members and connections. Members shall be detailed in place where practical. Drawings consisting totally of individual members are not acceptable.

   (3) Erection drawings showing the following:

      1) Marking and position of each member; size, type, location, and special field weld requirements; and, for each bolted joint, number and length of bolts and number and size of ring fills.

      2) A complete bill of materials, including bolts and weights, listing all material for one structure or the portion shown thereon. Show the number of pieces required; description of each piece, including size and length; and mark number on which the shop detail of each piece can be found. Total weight of one complete structure, tower body, or leg extension shall be noted. Calculate weights in accordance with LRFD, “AISC Code of Standard Practice for Steel Buildings and Bridges", except that weights for nonrectangular shapes and plates are to be based on actual detailed dimensions.

   (4) Function and stub setting drawing for lattice structures and towers.

(5) Tower testing procedures including rigging arrangement, methods of applying loads, and other pertinent data.

(6) Controlling dimensions of each structure, tower body, or leg extension.

(7) Western specifications number.

(8) Western job title and reference drawing number.

(9) Type and grade of material and finish.

(10) For shop and field welds, show joint details, filler metal requirements, and material.

3. APPROVAL DRAWINGS AND DATA FOR OIL STORAGE TANKS: Prior to fabrication, submit two copies of approval drawings and data for the oil storage tanks to the Civil Engineer. Send a copy of the transmittal letter to the COR.

   The drawings and data shall include manufacturer's name, specifications, descriptions, dimensions, weights, maintenance instructions, and other information necessary to show compliance with these specifications. The drawings shall also include the following information for foundation design:

   (1) Tank outline, dimensions, and weight.
   (2) Base type, dimensions, and mounting details.
   (3) Other information or data that may be necessary for foundation design.

4. FINAL DRAWINGS FOR STEEL STRUCTURES, MODIFICATION STEEL, AND OIL STORAGE TANKS: Prior to material shipment, furnish final drawings. The drawings shall show changes and revisions made up to the time material is shipped. Forward two copies of the drawings to the COR. Forward by certified mail, final drawings and a copy of the COR's transmittal letter to the Civil Engineer.

5. WELDING: Submit the following to the Civil Engineer:

   (1) Prior to fabrication submit all weld procedures not prequalified in accordance with AWS D1.1, “Structural Welding Code”.

   (2) Prior to fabrication submit a test and evaluation procedure describing the method to be used for verifying penetration of partial penetration welds.

   (3) Nondestructive and metallographic test reports, including metallographic weld samples, shall be submitted within 20 working days after tests are performed.

6. CONNECTION BOLTS: Prior to fabrication, submit the following to the Civil Engineer:

   (1) Certified copies of test reports for A 325 bolts and nuts. Bolts and nuts shall not be shipped until certified copies of reports have been received.

   (2) If A 325 bolts are used in place of A 394 bolts for lattice structures or towers, provide a bolt length and grip table.

7. MILL TEST REPORTS: Prior to fabrication, submit certified copies of test reports for structural steel and aluminum to the Civil Engineer.

   Certified mill test reports for steel and aluminum shapes and plates shall show customer's order, mill order, and Western specifications number. Mill certification shall show the weights of steel

and aluminum furnished for each size and heat number represented by the tests. No material shall be shipped until certified copies of reports have been received.

8. DULLING SURFACE TREATMENT FOR GALVANIZING: Submit the following for approval to the Civil Engineer:

   (1) Chemical composition of treatment, application procedure, and two sets of three samples each representing a reflectance of 20 percent, or less. Each sample shall be a galvanized-steel panel, 3 inches x 6 inches x 1/4 inch thick, and have the respective percent of reflectance stamped into the metal.

   If approved, samples shall constitute comparison standards for dulled galvanized-steel inspection.

9. TEST TOWERS: Submit the following to the Civil Engineer:

   (1) Not less than 10 days in advance of testing, notify the Civil Engineer and the COR of date and time when towers will be ready for testing. Prior to this date, obtain Western's approval of proposed test procedures, including rigging arrangements, methods of applying loads, and test frame layout with controlling dimensions.

   (2) Furnish certified calibration curves or charts of the load measuring devices to the Civil Engineer 5 days in advance of tests.

   (3) Within 4 weeks following completion of tests, submit a report, in triplicate, for each test tower. Report shall include a narrative description of tests; clear color photographs of test setups; nature of failures; detail diagrams and charts showing load application; deflection records; mill test reports; and load-measuring device calibration results. Report shall be neatly bound and mailed to the Civil Engineer.

4.1.2 MATERIAL:

1. STRUCTURAL STEEL:

   (1) Unless otherwise indicated on the drawings, steel shall be in accordance with ASTM A 36.

   (2) Structural Steel Tubing: ASTM A 500, Grade B.

   (3) ASTM A 572 or ASTM A 633 shall have a minimum longitudinal impact strength of 15 foot-pounds at minus 20°F as determined by the Charpy "V" Notch Impact Test in accordance with ASTM A 673/A 673M.

2. STRUCTURAL ALUMINUM:

   (1) Unless otherwise indicated on the drawings, alloy shall be 6061-T6 or -T651 in accordance with ASTM B 209.

   (2) Aluminum Tubing: Alloy 6061-T6 in accordance with ASTM B 221.

3. CONNECTION BOLTS, WASHERS, AND NUTS FOR LATTICE STRUCTURES AND TOWERS:

   (1) ASTM A 394, Type O. Bolts and recessed heavy hex nuts shall conform to requirements shown on drawing 41 2001.

   (2) ASTM A 325, Type 1 provided a bolt length and grip table shall be submitted for approval and used in place of drawing 41 2001.

(3) Step Bolts and Nuts: ASTM A 394, Type O and conform to the requirements shown on drawing 41 2001.

4. CONNECTION BOLTS, WASHERS, AND NUTS FOR STRUCTURES, EXCEPT LATTICE STRUCTURES AND TOWERS: ASTM A 325 Type 1.

5. WASHERS: Beveled washers shall be malleable iron or steel. Washers for anchor bolts shall be steel or wrought-iron.

6. LOCKNUTS: Palnuts (regular) or Type MF No. 1 (regular, square). Provide locknuts for connection bolts and anchor bolts.

7. GRATING: NAAMM MBG531, Type I or II, one-piece serrated-steel grating. Two standard sections of grating may be welded together to form a one-piece unit. End banding bars are required. Furnish grating with manufacturer's standard hold-down clips.

8. EXPANSION ANCHORS: Unless otherwise indicated on the drawings, expansions anchors shall be Hilti Kwik Bolt II, or equal, with a minimum diameter of 3/4-inch and a minimum embedment length of 8 inches.

9. ADHESIVE ANCHORS: Unless otherwise indicated on the drawings, adhesive anchors shall be Hilti HVA, or equal, with a minimum diameter of 3/4-inch and a minimum embedment length of 10 inches.

10. STEP BOLTS AND NUTS: ASTM A 394 and conform to the requirements shown on drawing 31 2003.

11. EYEBOLTS: Forged steel ASTM A 668, Class C, and conform to the requirements shown on drawing 31 2003.

12. STEEL PIPE: ASTM A 53, Grade B.

13. ARC-WELDING ELECTRODES: Use matching weld metal in accordance with AWS D1.1 for steel and AWS D1.2 for aluminum. The minimum tensile strength for steel Group I filler metal shall be 70 ksi.

14. HEADED SHEAR CONNECTORS: Low-carbon steel studs, 3/4-inch diameter, and 3 inches long after welding. Heads shall be 1 1/4-inch diameter and 3/8 inch thick. Shear connectors shall be equipped with appropriate ceramic arc shields. Shields or the shear connector ends shall be flux-filled for automatic welding application.

15. STEEL CABLE: ASTM A 586, Class A, galvanized-steel structural strand.

16. STEEL CABLE HARDWARE: Galvanized with the same or higher strength rating than the steel cable and of the type as shown on the drawings.

4.1.3 DESIGN DETAILS FOR GOVERNMENT-FURNISHED DRAWINGS:

1. MEMBER SIZES: Sizes shall be as shown on the drawings. Substitutions shall not be made without written approval. Approval will be given where the Contractor furnishes satisfactory proof of the nonavailability of the originally indicated size.

2. DETAILS: Check the drawings carefully, particularly with respect to possible exceptions from the Contractor's standard notations and practice (such as allowance for extra length of bent

members). The Contractor shall have complete responsibility for proper fit of members. Otherwise, details shall be as shown on the drawings.

3. BOLTS, NUTS, AND RING FILLS: Bolts, nuts, and ring fills shall be the quantities, types, and sizes called for in the material lists, provided that either MF or palnut locknuts may be furnished. The quantities of the various connection bolt lengths shall be adjusted, if necessary, as a result of the shop assembly.

4. FORGED HANGERS: Hangers may be fabricated from welded components, provided welds are complete penetration and ultrasonically tested in accordance with AWS D1.1.

4.1.4 DESIGN DETAILS FOR CONTRACTOR-FURNISHED DRAWINGS:

1. GENERAL: Member sizes, details, and setting dimensions for anchor bolts and embedded material shall be as shown on the drawings. Connection details shown on the drawings may be varied slightly, provided the changes are in accordance with the specifications.

2. DOUBLE-ANGLE MEMBERS: Connect members as follows:

   (1) Tension members at 3-foot maximum intervals with stitch bolts and ring fills.

   (2) Compression members with stitch bolts and ring fills spaced so that the L/r ratio for one angle is not greater than the L/r ratio of the double-angle member (maximum of 2 feet).

   (3) With stitch bolts at a minimum of two locations between panel points.

   (4) With one stitch bolt on the inner gage line when connected legs are 4 inches and smaller.

   (5) With two stitch bolts and one filler plate (one bolt on each gage line) when connected legs are larger than 4 inches.

3. LONG TENSION MEMBERS: Members carrying tension only or designated on the drawings for draw shall be detailed shorter than theoretically required length. Members 10 feet or less in length shall be detailed 1/8 inch short. Unspliced members more than 10 feet in length shall be detailed short by an amount equal to 1/l6 inch for each 10 feet of length, or major fraction thereof, plus 1/l6 inch (maximum of 1/4 inch). Spliced members shall be detailed short an additional 1/l6 inch for each lap splice or 1/8 inch for each butt splice.

4. LATTICE STRUCTURES AND TOWERS:

   (1) Splices: Splice locations and details shall be as shown on the drawings. Splices shall be at or directly above the panel points. The splice angle thickness shall be the heavier member unless otherwise shown on the drawing. Grind splice angles at the heel to fit fillets of outside angles. Do not use fillers between splice angles and main members of splices. Use a minimum of six bolts (three in each leg) in splices unless otherwise shown on the drawings.

   (2) Connections: Bolt connections using a minimum number of gusset plates. If the elimination of gusset plates would increase the joint eccentricity beyond a reasonable amount, use gusset plates. Clip corners of web members to eliminate or reduce eccentricity. Where gusset plates are used, connect compression web members to main members with at least one bolt. Where fills are required at two or more adjacent holes, use a single-plate fill instead of ring fills.

   Unless otherwise shown on the drawings, the following conditions shall be met:

   1) Stressed web members shall be connected by at least two bolts.

2) Secondary members may have one bolt connection placed on the inner gage line. Where possible, without impairing the strength of main members, two bolts shall be used at one end.

3) Diagonal tension web members may be connected entirely on a gusset to avoid the use of fills.

4) Diagonals shall be one piece and connected at the point of intersection by one or more bolts.

5) Reinforce stressed members where the outstanding leg is blocked out.

6) Gusset plates for stressed members shall be at least 1/16 inch thicker than the connected web member.

7) Provide rings fills at the intersection of diagonal members when the distance between the two members, at intersection, exceeds 1/16 inch per foot of length of one of the members.

8) Ends of outstanding legs of web member angles 2 1/2 inches and over shall be cut at 45°, where practicable.

(3) Connection Bolts: Connection bolt lengths shall be as shown on drawing 31 2002. Threads shall not be in the shear plane for ASTM A 394 bolts. ASTM A 325 bolts shall be long enough for full thread engagement of a heavy hex nut and either a palnut or MF locknut. Threads may be in the shear plane for ASTM A 325 bolts. Connection bolts shall be the same type and grade for the complete structure or tower, unless shown on the drawings. Provide locknuts for bolts. Provide beveled washers for bolts in sloped flanges. Provide bolts, nuts, locknuts, and beveled washers in quantity sufficient to compensate for normal field losses (2-percent maximum).

(4) Bolt Spacing: Unless otherwise shown on the drawings or authorized by Western, the minimum center-to-center hole spacing shall be as shown in Table 4-1. Where practical, spacing shall not be less than 3 diameters. Wherever possible, distance from bolt center to face of member shall permit socket wrench use.

TABLE 4-1--BOLT HOLE SPACINGS (Inches)

Bolt Diameter	Minimum Edge Distance		Minimum Center to Center
	Rolled or Flame-Cut* Edge	Sheared Edge	
5/8	3/4	7/8	1 1/2
3/4	1	1 1/8	1 7/8
7/8	1 1/4	1 3/8	2 1/4

*Where flame cuts are made by mechanically guided torch.

(5) Edge Distance: Unless otherwise shown on the drawings or authorized by Western, distance between member edge and bolt hole center shall not be less than shown in Table 4-1. In

detailing the gage lines, make allowance for mill tolerances in the width of legs or flanges to ensure meeting the specified minimum edge distance.

(6) Step Bolts and Eyebolts: Provide step bolts and eyebolts as shown on the drawings. Space step bolts approximately 15 inches apart, with a maximum spacing of 17 inches. Provide holes for step bolts on the inner gage line of leg angle and space to avoid climbing interference with outstanding leg of the structure web members.

5. WELDED (GALVANIZED OR PAINTED) STRUCTURES:

(1) Weld shop connections and bolt field connections.

(2) Connection bolt lengths for shall be determined by the Contractor. Provide locknuts for bolts. Provide beveled washers for bolts in sloped flanges. Provide bolts, nuts, locknuts, and beveled washers in quantity sufficient to compensate for normal field losses (2 percent maximum).

(3) Unless otherwise shown on the drawings or authorized by Western, the minimum center-to-center hole spacing, and distance between member edge and bolt hole center, shall be in accordance with LRFD.

4.1.5 QUALITY CONTROL:

1. GENERAL: The Contractor shall have defined quality control methods and functions available for review and approval. Maintain permanent records for mill test reports; welding procedures; certification for welding operators, welders, and tack welders; and visual and nondestructive test reports.

   Component parts and welds shall be inspected to determine conformance to contract requirements, drawings, codes, standards, and procedures, including dimensional compliance, quality of welds, weld contour, weld size, and overall workmanship.

2. WORKMANSHIP AND DEFECTIVE MATERIAL: Work shall be equal to best modern practice in the manufacture and fabrication of material. Details of design, fabrication, and erection not covered by the drawings or the specifications shall conform to LRFD for steel and to AA for aluminum. The Contractor shall be responsible for correct fitting of parts and replacing defective material discovered during erection.

3. INSPECTION AND TESTS: Inspection of material will be made in accordance with Standard 1 - General Requirements, Section 1.2.3 "Material Inspection". Western inspection and tests of material at the mill will be waived.

   Certified mill test reports for steel and aluminum shapes and plates shall show customer's order, mill order, and Western specifications number. Mill certification shall show the weights of steel and aluminum furnished for each size and heat number represented by the tests. No material shall be shipped until certified copies of reports have been received.

   Send one copy of each report to the Civil Engineer and the COR.

4.1.6 FABRICATION:

1. GENERAL: Plates shall be edge planed or flame cut with mechanically guided torches and ground smooth.

2. STRAIGHTENING MATERIAL: Before being laid out or worked in any manner, structural material shall be straight, free from sharp kinks and bends, and clean of rust and dirt. If straightening is necessary, no metal damage shall result.

3. SHEARING AND CUTTING: Shearing and cutting shall be finished neatly on material exposed to view. Copes and re-entrant cuts shall be filleted before cutting.

4. HOLES: Holes in steel less than 13/16 inch thick may be punched to full size unless otherwise shown on the drawings. Holes shown on the drawings as drilled holes and holes in steel 13/16 inch thick or more shall be drilled or subpunched and reamed. Holes shall be clean cut and without torn or ragged edges. Burrs resulting from reaming or drilling shall be removed with a tool making a 1/16-inch bevel. Holes shall be cylindrical and perpendicular to the member. To avoid hole distortion and when holes are within 4 inches of a bending point, holes shall be made after bending.

5. PUNCHING: For punching to full size, the punch diameter shall be the nominal hole diameter; and the die diameter shall not be more than 1/16 inch larger than the punch diameter. For subpunching, the punch diameter shall be 1/4 inch smaller than the nominal hole diameter; and the die diameter shall not be more than 3/32 inch larger than the punch diameter. For reamed work, subpunching and reaming shall not result in a punched surface in the hole periphery.

6. REAMING AND DRILLING: For reamed or drilled holes, the finished hole diameter shall be as shown on the drawings.

7. PUNCHING, REAMING, AND DRILLING ACCURACY: Holes shall be spaced accurately in accordance with the drawings and located on the gage lines. The maximum allowable variation in hole spacing is 1/32 inch.

8. BASE PLATES: Base plates shall be straight, true, and square cut. Grind torch-cut edges straight and smooth.

9. COMPRESSION JOINTS: Compression joint surfaces depending on contact bearing shall be faced to have full contact bearing when aligned and welded.

10. COLD FORMING: The Contractor shall have documented, detailed procedures describing cold forming. Methods shall produce bends without an undue amount of cracking. Cracking or opening of surface laminations shall be investigated and repairs performed, inspected, and recorded. Plates displaying gross cracks, laminations, or lamellar tears shall be rejected. The radius of any inside corner shall be the greater of three times the specified wall thickness, or as specified by LRFD.

11. DIMENSIONAL TOLERANCES FOR STEEL: Steel member and plate tolerances shall be in accordance with LRFD and as follows:

    (1) Built-Up Square and Rectangular Member Shape Tolerances: Fabricate to meet the tolerances of square and rectangular tubing.

    (2) Eight and Twelve Sided Member Shape Tolerances:

        1) Cross Section:

Width Across Flats	Tolerance
36 inches or less	-1/8 inch, +1/4 inch
Greater than 36 inches	-1/4 inch, +1/2 inch

        2) Circumference: Dimension shall be -0 inches.

3) Maximum Variation From Straightness: Variation shall not exceed 1/8 inch per 10 feet of length.

12. WELDING FOR STEEL: Welding shall be performed in accordance with AWS D1.1. Use a shielded arc welding process. Headed shear connectors for stub angles shall be end-welded with automatic end welding guns. Other welds shall be as shown on the drawings and made so that residual shrinkage stresses will be a minimum. No stress-relieving treatment is required. If not previously qualified, the welding procedures, welding operators, welders, and tack welders shall be qualified in accordance with AWS D1.1.

    Use one or two partial penetration (no permanent backing material) longitudinal seam welds for eight and 12 sided steel members. These welds shall have 80-percent minimum penetration through the material thickness, except for the 6 inches of weld from base or flange connection plates, which shall be complete penetration. Also, these welds shall be made by the submerged arc welding process. The root opening for longitudinal seam welds shall be considered zero, with a 1/16-inch root opening permitted for dimensional tolerance.

13. WELDING FOR ALUMINUM: Welding shall be performed in accordance with AWS D1.2. If not previously qualified, the welding procedure and welding operators shall be qualified in accordance with AWS D1.2.

4.1.7 NONDESTRUCTIVE AND METALLOGRAPHIC WELD TESTS:

1. GENERAL: Inspect and test welds and perform the tests in the presence of a Western inspector and in accordance with AWS D1.1 for steel and AWS D1.2 for aluminum, or procedures approved by the Civil Engineer.

   Repair and reexamine defective welds in accordance with AWS D1.1 for steel and AWS D1.2 for aluminum.

2. VISUAL INSPECTION: In addition to the tests required below, welds shall be visually inspected following the procedures, techniques, and standards of AWS D1.1 for steel and AWS D1.2 for aluminum.

3. ULTRASONIC AND RADIOGRAPHIC TESTS FOR COMPLETE PENETRATION WELDS: Perform ultrasonic or radiographic tests in accordance with AWS D1.1 for steel and AWS D1.2 for aluminum. Test the entire length of complete joint penetration shop and field welds. Tests shall be performed after galvanizing for complete joint penetration welds used at T-joints (as defined by AWS D1.1) where the thicker plate is more than three times the thickness of the thinner plate. Otherwise, tests can be before galvanizing.

4. ULTRASONIC AND METALLOGRAPHIC TESTS FOR PARTIAL PENETRATION WELDS: Perform ultrasonic or metallographic tests for partial penetration welds. Prior to fabrication, submit a test and evaluation procedure describing how testing and evaluation will be performed to verify weld penetration. Test reports for ultrasonic and metallographic tests, including metallographic weld samples, shall be submitted to Western within 20 days after tests are performed. Submit procedures, reports, and metallographic weld samples to the Civil Engineer.

   (1) Ultrasonic Tests: Perform ultrasonic tests in accordance with AWS D1.1 or procedures approved by the Civil Engineer, and as follows: Prepare a test piece with the same weld joint configuration and 80-percent weld penetration, for each thickness of material to be tested. Verify the test and evaluation procedure, using the test pieces. Spot test partial penetration welds a minimum of 10 percent of each weld length, at random intervals, with no test length exceeding 12 inches.

(2) Metallographic Tests: Perform metallographic examination, using an accredited test lab approved by Western. for each tubular piece mark, remove a weld sample from the first tubular section and from every tenth section thereafter. Remove samples by core drilling and plug the holes with full penetration welds without permanent backing material. The test procedure shall include a sample report form for documenting the test results. This form shall include Western's contract number; structure type and piece mark number; material thickness; name, location, and telephone number of the test lab; a sketch to show where weld samples are removed; and the actual weld penetration of samples.

5. MAGNETIC PARTICLE AND DYE PENETRANT: The COR may require magnetic particle or dye penetrant weld tests where the appearance or the configuration suggests a possibility of cracking. The magnetic particle test procedure shall be in accordance with ASTM E 709. The dye penetrant test procedure shall be in accordance with ASTM E 165. The acceptance standards for the tests shall be in accordance with AWS D1.1 and AWS D1.2.

4.1.8 MARKING:

Anchor bolts and embedded material shall be marked with the designation shown on the specification drawings. Other individual pieces shall be marked with the designation shown on the approved erection drawings. Markings shall be stamped into the metal before galvanizing or painting. The numerals or letters shall be 1/2-inch minimum height, clearly legible after galvanizing or painting, and circled or bracketed with black paint. Anchor bolts may be identified by tagging. In designating members, use as few designations as possible; and each member of identical size and detail shall have the same designation regardless of its position in the structure or tower. Mating parts shall be match marked.

4.1.9 SHOP ASSEMBLY:

1. GENERAL: Structures shall be shop-assembled to the extent necessary to assure correct fit of parts, adequate bolt lengths, and proper field erection. One lattice tower of each type and height, including every combination of leg extensions, shall be shop-assembled to the extent necessary to assure correct fit of parts, adequate bolt lengths, and proper field erection.

2. ASSEMBLY: Reaming of unfair holes is not permitted. A reasonable amount of drifting is allowed. "A reasonable amount of drifting" is defined as drifting without causing hole elongation or deformation of members. Galvanizing damaged during the course of "a reasonable amount of drifting" shall be repaired in accordance with Section 4.1.10, "Galvanizing and Painting". Shop-assembled parts shall be dismantled for shipment.

   Bolts used in shop assembly shall be of the lengths called for on the erection drawings. Where the indicated length is too short to permit acceptable assembly, provide the next longer bolt increment. If assembly is from Contractor-furnished drawings, the drawings shall be revised to show the actual bolt lengths. If assembly is from Government-furnished drawings, provide marked prints showing changes to the Civil Engineer.

4.1.10 GALVANIZING AND PAINTING:

1. CLEANING: After shopwork completion, material shall be clean of rust, loose scale, dirt, oil, grease, and other foreign substances. Clean all welding flux residue (slag) from welded areas.

2. PLATE AND SHAPE GALVANIZING: Plates and shapes shall be galvanized after fabrication. After cleaning, material shall be zinc coated (galvanized) in accordance with ASTM A 123. Double dipping or progressive dipping of closed-member shapes will not be permitted. Where member lengths of open shapes prevent dipping in one operation, care shall be exercised to prevent warping. Finished compression members shall not have lateral variations greater than 1/1000 the axial length between the points which are to be laterally supported. Holes shall be free of excess spelter after galvanizing.

3. VENT AND DRAIN HOLES: Vent and drain holes for closed-member shapes are shown on the drawings. Vent holes shown on the drawings are required for proper air circulation after galvanizing and shall not be changed by the Contractor. Drain holes shown on the drawings are typical to facilitate the galvanizing process and may be changed to comply with the Contractor's shop practice; provided, the change does not affect the integrity of the structure.

4. HARDWARE GALVANIZING: Bolts, nuts, washers, and locknuts shall be galvanized in accordance with ASTM A 153. Excess spelter shall be removed by centrifugal spinning. Cadmium-plated hardware is not permitted on structural steel.

5. STRAIGHTENING AFTER GALVANIZING: Plates and shapes which have been warped by the galvanizing process shall be straightened by being rerolled or pressed. Material shall not be hammered or otherwise straightened in a manner that will damage the protective coating. If, in the opinion of the COR, material has been harmfully bent or warped, it shall be rejected.

6. GALVANIZING REPAIR: Material with damaged galvanizing shall be redipped unless the damage is local and can be repaired. If the galvanized coating becomes damaged after being dipped twice, the material shall be rejected. Where repair is authorized, the damaged area shall be repaired in accordance with ASTM A 780, except the coating thickness shall be a minimum of 3.0 mils.

7. DULLING SURFACE TREATMENT: Exposed surfaces of steel structures, including connection and anchor bolts, nuts, washers, locknuts, and visible portions of embedded material shall be given an approved dulling treatment.

   Galvanized surfaces shall be treated to provide a gray or blackish gray coloration. Treatment shall dull the shine and reflectance of surfaces and provide a generally uniform appearance over each surface and between separately galvanized and treated members. The dulling shall be accomplished by treatment and rinsing of all surfaces. Soft or water- soluble surface deposits resulting from the treatment shall be removed by rinsing. Treatment shall have a life of at least 1 year and not be detrimental to the service life of the protective zinc coating. Dulled surfaces shall be free of white rust (zinc oxide).

   Aluminum surfaces shall be treated, by means other than painting, to provide a coloration of aged, naturally-weathered, and dulled aluminum. Treatment shall dull shine and reflectance of surfaces and provide a generally uniform appearance. Soft or water-soluble surface deposits resulting from treatment shall be removed by rinsing or other effective means. Treatment shall have a life of at least 1 year and not be detrimental to the aluminum.

   The finished steel and aluminum shall maintain a reflectance no greater than that specified in the project specifications, plus or minus 3 percent. Reflectance shall be measured utilizing any reflectometer calibrated against "Neutral Matte Finish" color standards obtainable from Munsell color, Macbeth Division of Kollmorgan Corporation, 2441 North Calvert Street, Baltimore, Maryland. The reflectometer used shall have a margin of error no greater than plus or minus 3 percent.

8. PAINTING: Surfaces of steel structures to be painted shall be prime painted in the shop in accordance with the Standard 12 - Painting.

4.1.11 HANDLING AND TRANSPORTING:

Structures and components shall be transported and handled to avoid bending or damage. Bent pieces may be used only if they are straightened without damage to the material or galvanizing. Material with damaged galvanizing shall be redipped unless the damage is local and can be repaired in accordance with Section 4.1.10, "Galvanizing and Painting". Pieces bent beyond repair shall be replaced.

During storage, prevent ground or surface water contact by placing steel and aluminum on timber blocking.

4.1.12 ERECTION:

Install anchor bolts and embedded material in accordance with the specifications drawings. Install or erect other material in accordance with the final erection drawings. Erection and installation shall be in accordance with the LRFD, “AISC Code of Standard Practice". No structure shall be erected on foundations until 7 days after placement of concrete, nor until backfill has been placed and compacted. Set anchor bolts and embedded material accurately to the grade and alignment designated on the drawings. Set equipment bases and base plates level and in exact position. Where shown on the drawings, equipment bases and base plates shall be given full and even bearing by grouting in place. Remove shims and grout the remaining spaces. Grout shall be in accordance with Standard 3 - Concrete, Section 3.2.5 "Grouting Mortar for Equipment and Metalwork".

Place stub angles in foundations as shown on the drawings, and support in proper position by means of a rigid frame or equivalent suitable device to ensure placement of stubs within tolerances specified below. Hold stub angles rigidly to prevent displacement during concrete placement. Difference in elevation between identical parts of any two stub angles shall not exceed 1/1000 of the horizontal distance between stubs. Actual elevation of any stub angle shall not differ from computed elevation by more than 0.02 foot. Stub angles shall be located horizontally so that each is within 1/1000 of the correct distance shown on the drawings. Heel and side batter of the stub angles shall not differ from the correct batter by more than 1/16 inch per foot of exposed stub.

Connection bolts shall be entered to the head. ASTM A 394 nuts shall be torqued 70 to 100 pound-feet for 5/8-inch bolts, 125 to 165 pound-feet for 3/4-inch bolts, and 180 to 230 pound-feet for 7/8-inch bolts. ASTM A 325 bolts shall be tightened in accordance with LRFD, “AISC Specification for Structural Joints Using ASTM A 325 or A 490 Bolts". Nuts shall be locked in place. Tighten Type MF locknut sufficiently to flatten its concave face to full contact against the nut. Tighten palnut locknut one-third turn beyond contact with the nut. Wrenches which may deform the nuts or cut or flake the galvanizing will not be permitted.

A reasonable amount of drifting, as defined in Section 4.1.9, "Shop Assembly", will be allowed in assembling. Reaming for correction of mismatched holes will not be permitted.

Field welding, including welding procedure and welding operators, shall conform to the requirements of Section 4.1.6, "Fabrication". Perform ultrasonic tests for the field welds specified in Section 4.1.7, "Nondestructive and Metallographic Weld Tests". Inspect other field welds in accordance with Section 4.1.7, "Nondestructive and Metallographic Weld Tests". Clean field welds by sandblasting or power grinding.

Remove corrosive and foreign material deposited on the structures prior to or during erection.

Field-installed studbolts shall be automatically end-welded with a stud welding gun. Surfaces within 2 inches of field weld locations shall be free from paint or other material that would prevent proper welding or produce objectionable fumes while welding.

The finish painting system shall be applied in the field in accordance with the Standard 12 - Painting.

Erecting errors and omissions, including tightening of loose bolts, nuts, and locknuts, shall be corrected by the Contractor.

Install switch operating platforms in the proper position with respect to the switch control rod or pipe and ground platform as shown on drawing 31 1075. Platforms shall not be installed until after the switches are installed.

Install equipment cabinet platforms to provide access for routine operation and maintenance. The platform top shall not be above the cabinet bottom. Platforms shall be grounded as shown on the equipment cabinet platform drawings.

4.1.13 RELOCATING, MODIFYING, AND STORING STEEL STRUCTURES AND TOWERS:

1. GENERAL: Dismantle, handle, transport, re-erect, modify, and bundle structures as required. Avoid bending and galvanizing damage to members. Repair damaged galvanizing in accordance with Section 4.1.10, "Galvanizing and Painting". Members damaged beyond repair or lost shall be replaced.

2. RELOCATING STRUCTURES: Structures to be relocated shall be dismantled as required to prevent structural damage. Anchor bolts or embedded material shall not be salvaged.

   Re-erect structures in accordance with Section 4.1.12, "Erection". Replace removed, loosened, or lost bolts with new bolts, nuts, and locknuts of the same size and type required by the erection drawings. Plumb structures after re-erection. The cost of loosening and retightening bolts required to accomplish this, whether due to relocation operations or to an existing out-of-plumb condition, shall be included in the applicable Bidding Schedule item.

3. MODIFYING STRUCTURES: Field-drill new holes to complete the modification work. Operations in removing, replacing, and modifying members shall ensure the integrity of the structure at all times. Members removed and not required in the modified structure become the Contractor's property and shall be promptly removed from the work site.

4. STORING STRUCTURES: Structures to be stored shall be completely dismantled, salvaged, and stored above ground on timber blocking. Anchor bolts, stub angles, or embedded material shall not be salvaged.

Pack undamaged bolts, nuts, washers, and ring fills separately, by size, in wood boxes or kegs. Replace damaged bolts, nuts, washers, and ring fills with new ones of the same size and type. Provide new locknuts. Store structures as a unit. Consolidate and steel band identical steel members in small bundles convenient for handling. Identify banded bundles with weatherproof tags which indicate the piece marks and member quantities. Prepare and deliver a master list of bundles to the COR.

4.1.14 TOWER TEST:

1. TEST TOWERS: Members comprising test towers shall be same sizes as shown on specifications drawings, with no substitutions, and of same grade of material and class of fabrication as those to be furnished for Section B towers. Mill test reports as required by Section 4.1.5 “Quality Control”, covering steel used in the test towers, shall be available for review by Western's representative at test site prior to testing. Test towers need not be galvanized.

2. TEST LOAD APPLICATION AND MEASUREMENT: Conductor and ground wire test loads shall be applied directly to their respective attachments. Wind test loads shall be applied in accordance with test load drawings.

   Measure test loads at point of structure application without intervening cables, blocks, lever systems, or pulleys.

   Measure vertical, transverse, and longitudinal test loads in their actual direction. However, measurements obtained from a resultant load whose components are equal to required loads will be acceptable; provided, an angle-sensing device is installed at point of load application.

Angle-sensing device shall be capable of monitoring resultant load to insure correct required vertical, transverse, and longitudinal loads. Rigging cables and hardware shall be adequate in size and strength.

Sheaves shall be free running. Provide and place slack guys or slings to minimize possibility of complete tower collapse should a major failure occur.

Load-measuring devices shall be calibrated by an independent and reputable testing laboratory within the 30-day period prior to tests. Setup of measuring devices (length of leads and other related items) shall be same during calibration and tests.

3. TEST PROCEDURES: Each test shall be conducted in presence of Western's design engineer and in accordance with the following requirements:

   (1) Erect towers on a foundation structure of adequate strength and stiffness to withstand safely the tower reactions under test loads, without noticeable distortion or displacement. Tower members shall be connected to foundation structure with same number, size, and spacing of bolts used in normal stub splice details. Vertical axis of erected tower, through its center of gravity, shall not be out of plumb more than 1 inch for every 40 feet in height.

   (2) Each test loading increment shall be applied according to data furnished (within 3 percent of value specified) and maintained at least 5 minutes with no slacking off or adjustment of loads. If necessary to adjust loads, 5-minute period shall start after loads are stable and constant. Unless noted on test load drawings, completely remove test loads before loading for next test.

   (3) Conspicuous yielding or failure under test loads shall be considered a defect. If defect is due to connection details, fabrication, or test procedures, the Contractor shall, without additional compensation, correct defect as directed by Western's design engineer and again perform test. If defect is due to basic design deficiencies, the Contractor shall, with compensation for extra work in accordance with the contract clause titled "Changes", correct defect as directed by Western's design engineer and again perform test.

   (4) Measure longitudinal tower deflections under each test load increment at tops of both ground wire peaks and at crossarm ends. Measure transverse deflections on tower centerline at crossarm level and at ground wire peaks. Deflection measurements shall be to nearest 1/4 inch.

   (5) After testing towers for specified loading cases, further load increments for one case shall be applied as shown on test load drawings or as directed by Western's design engineer until failure of a tower element or until reaching limit specified on the test load drawings.

   (6) Upon completion of tests, disassembly of towers shall include inspection of all members for evidence of excessive permanent set, shear failure in bolts, or member failure in bearing.

SECTION 4.2--MISCELLANEOUS METALWORK

4.2.1 ALUMINUM COVERS:

1. MATERIAL: Aluminum alloy 6061-T6. Covers shall be 1/4-inch-thick floor plate with a raised, four-way pattern.

2. FABRICATION: Plates shall be straight, true, and free from warps and twists. If straightening is necessary, no metal damage shall result. Finish neatly material exposed to view. Grind sharp and rough edges of covers smooth. Perform welding in accordance with AWS D1.2.

3. INSTALLATION: Install aluminum covers accurately in position and alignment. Finish the surfaces of concrete to be in contact with the covers level so that covers will lie flat and will not rock.

   Paint aluminum cover and hold-down angle surfaces in contact with concrete with commercial grade bituminous paint to produce a 5-mil minimum thickness.

4.2.2 STEEL COVERS:

1. MATERIAL: ASTM A 36. Covers shall be 3/16-inch-thick floor plate with a raised, four-way pattern.

2. FABRICATION: Plates shall be straight, true, and free from warps and twists. If straightening is necessary, no metal damage shall result. Finish neatly material exposed to view. Grind sharp and rough edges of covers smooth. Galvanize the covers. Perform welding in accordance with AWS D1.1.

3. INSTALLATION: Install steel covers accurately in position and alignment. Finish the surfaces of concrete to be in contact with the covers level so that covers will lie flat and will not rock.

SECTION 4.3--TANKS

4.3.1 OIL STORAGE TANKS:

1. REQUIREMENTS:

   (1) The tank shall be equal to "Tankvault II", as manufactured by Hallmark Corporation, 904 Silver Spur Road, Suite 345, Rolling Hills Estates, CA 90274 or equal.

   (2) The tank shall be Underwriters Laboratories (UL) listed according to U.L., Subject 2085 Outline of Investigation for Insulated Tanks (vaulted tanks).

   (3) The tank shall be tested in accordance to the Uniform Fire Code Appendix IIF Proposed Test Requirements for Protected Tanks (vaulted tanks): Standard 79-7.

   (4) The tank shall be cylindrical in shape and listed in accordance with U.L. 142 standard for aboveground tanks.

   (5) The internal steel tank shall be coated with a rust preventive coating.

2. REQUIRED ACCESSORIES:

   (1) 5-Gallon Internal Overspill Containment Manhole.
   (2) 24-inch access for people.
   (3) 4-inch Bronze Fill Adapter.
   (4) 4-inch Aluminum Fill Tube.
   (5) 4-inch Ground Reading Gauge.
   (6) 2-inch Standard Vent.
   (7) 6-inch, 16-Ounce Emergency Vent.
   (8) 2-inch Test Well Cap and Adapter.
   (9) 2-inch Steel Coupling.
   (10) 2-inch x 5-foot Vent Extension.
   (11) Ladder.
   (12) Two 1/4-inch high copper alloy grounding studs located on opposite corners of the tank base.

Western
AREA POWER
ADMINISTRATION

CONSTRUCTION STANDARDS

STANDARD 5
TRANSMISSION LINE STEEL POLE STRUCTURES

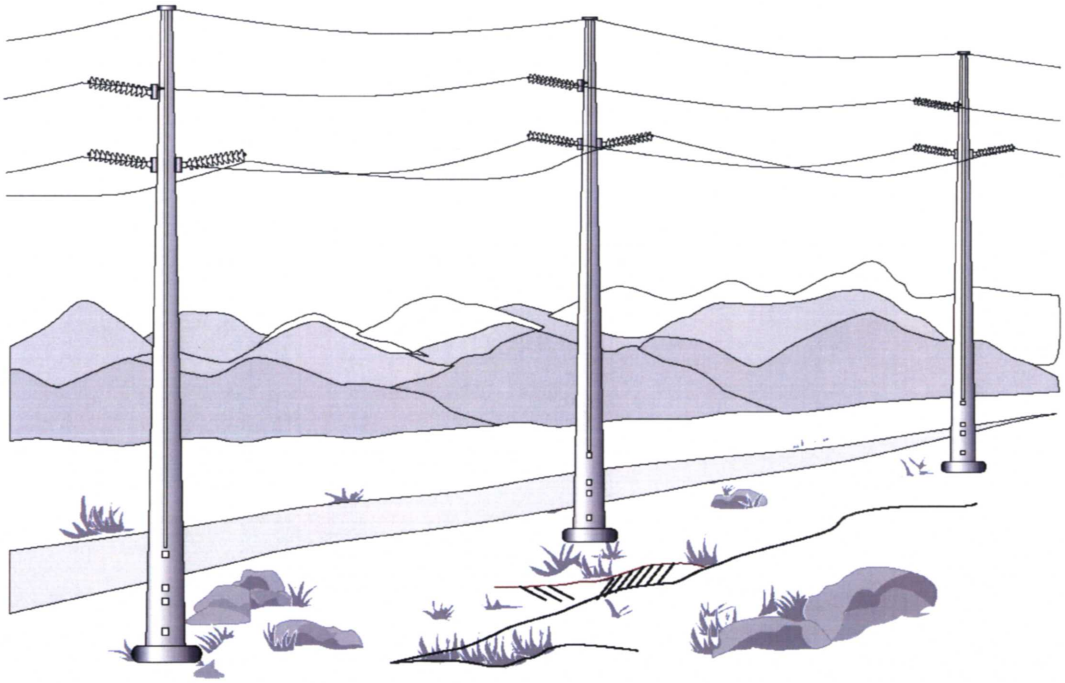

March 2010

SAFETY
A HABIT TO LIVE BY

TABLE OF CONTENTS

Page Number

SECTION 5.1--STEEL POLE STRUCTURES 5-4

5.1.1 CONTRACTOR-FURNISHED DATA AND DRAWINGS 5-4
1. General 5-4
2. Design Data 5-4
3. Mill Test Reports 5-4
4. Welding Submittals 5-5
5. Dulling Treatment Submittals 5-5
6. Painting Submittals 5-5
7. Approval Drawings 5-5
8. Final Drawings 5-7
9. Submittal Requirements 5-7

5.1.2 DESIGN REQUIREMENTS 5-7
1. General 5-7
2. Design Guides 5-7
3. Specific Requirements 5-7
4. Embedment Design for Direct-Embedded Structures 5-10

5.1.3 GROUNDING REQUIREMENTS 5-10
1. General 5-10
2. Galvanized, Dulled Galvanized, and Metallized Structures 5-10
3. Weathering-Steel Structures 5-10
4. Painted-Over-Galvanized Structures 5-10

5.1.4 MATERIAL 5-11
1. Pole Shafts, Davit Arms, and Crossarms 5-11
2. Base Plates and Connection Plates 5-12
3. X-Braces and Miscellaneous Structural Steel 5-12
4. Connection Bolts, Nuts, Locknuts, and Lockwashers 5-12
5. Anchor Bolts, Nuts, and Washers 5-12
6. Ground Plates 5-13
7. U-Bolts and Chain Links 5-13
8. Arc-Welding Electrodes 5-13
9. Paint System 5-13
10. Polyurethane Coating 5-13
11. Guys 5-13
12. Guy Hardware 5-13
13. Steel Guy Anchors and Rods 5-13
14. Concrete Guy Anchors 5-13
15. Fixed and Removable Climbing Rung Sections 5-13
16. Clips for Fixed and Removable Climbing Rung Sections, Belt Loops, Hand Loops, Ladder Brackets, and Ring Clips 5-14
17. Work Rings 5-14
18. Removable Steps and Attachments 5-14
19. Structure Identification Plates 5-14

5.1.5 QUALITY CONTROL 5-14
1. General 5-14
2. Workmanship and Defective Material 5-14

3. Inspection and Tests 5-15
4. Dimensional Tolerances 5-15

5.1.6 FABRICATION 5-16
1. General 5-16
2. Straightening Material 5-16
3. Shearing and Cutting 5-16
4. Holes 5-16
5. Edge Distances and Bolt Spacing 5-16
6. Pole Shaft-to-Base Plate and Pole Shaft-to-Flange Plate Connections 5-17
7. Crossarm-to-Arm Bracket and Davit Arm-to-Arm Bracket Connections 5-17
8. Cold Forming 5-17
9. Welding 5-17

5.1.7 NONDESTRUCTIVE AND METALLOGRAPHIC WELD TESTS 5-17
1. General 5-17
2. Visual Inspection 5-17
3. Ultrasonic and Radiographic Tests for Complete Penetration Welds 5-17
4. Ultrasonic and Metallographic Tests for Partial Penetration Welds 5-17
5. Magnetic Particle and Dye Penetrant Tests 5-18

5.1.8 MARKING 5-18
1. Structure Components 5-18
2. Structure Identification Plate 5-18

5.1.9 GALVANIZING 5-18
1. Cleaning 5-18
2. Plate and Shape Galvanizing 5-18
3. Hardware Galvanizing 5-19
4. Straightening After Galvanizing 5-19
5. Galvanizing Repair 5-19

5.1.10 DULLED GALVANIZING 5-19
1. Dulling Treatment 5-19
2. Reflectance 5-19

5.1.11 METALLIZING 5-19
1. General 5-19
2. Surface Preparation 5-19
3. Anchor-Bolted Structures and Direct-Embedded Structures with Concrete Backfill 5-19

5.1.12 WEATHERING-STEEL FINISH 5-19
1. Direct-Embedded Structures With Concrete Backfill 5-19
2. Anchor-Bolted Structures 5-20

5.1.13 PAINTING 5-20
1. General 5-20
2. Surface Preparation and Application 5-20
3. Surfaces not to be Painted 5-20

5.1.14 POLYURETHANE COATING 5-20
1. General 5-20
2. Direct-Embedded Structures with Concrete Backfill 5-21

5.1.15 HANDLING AND TRANSPORTING 5-21
5.1.16 INSTALLATION 5-21
1. General 5-21
2. Anchor-Bolted Structures 5-22
3. Direct-Embedded Structures 5-22
4. Guys and Anchors 5-22
5. Maintenance Provisions 5-22
6. Structure Orientation 5-23
7. Field Welding 5-23
8. Direct-Embedded H-Frame Structures 5-23
9. Temporary Guying Requirements 5-23
10. Vibration Control 5-23
11. Installation Tolerances 5-23

SECTION 5.1--STEEL POLE STRUCTURES

5.1.1 CONTRACTOR-FURNISHED DATA AND DRAWINGS:

1. GENERAL: Use United States standard units of measurement and English words, signs, and symbols. Submit data and drawings for all structures. Include design calculations for all structure components. Drawings shall be new originals. Reproductions of the specification drawings are not acceptable.

   Thoroughly check data and drawings for accuracy and completeness before submittal. Western will not check details and intermediate dimensions.

   Submit data and drawings as they are completed and checked for one or several structures rather than delaying to include drawings for the complete specifications requirements in one submittal.

   Western will return one set of the design data sheets, which require changes and one print of each drawing, marked to indicate approved or not approved and any required changes. Contractor shall change the designs and details, which Western determines necessary to make the finished structures conform to these specifications.

   Western's review time is specified in the project specifications in the "Commencement, Prosecution, and Completion of Work" paragraph of Division 1, "General Requirements". Western approval shall not relieve the Contractor from meeting the specification requirements nor the responsibility for design and drawing correctness. Fabrication prior to design data and drawing approval will be at the Contractor's risk.

2. DESIGN DATA: Prior to fabrication, submit for approval, the following design data for each type and height of structure:

   (1) General dimensions and weight.

   (2) Computer analyses for each load case showing ultimate moment capacities, total ultimate shears, moments, axial loads, and rotations at ground line, point of base fixity, splices, joints, points where plate size changes, and other critical points. Accuracy and correctness of the structure design, based on the loads indicated on the drawings, is the Contractor's responsibility.

   (3) Maximum deflection at top of structure for each load case shown on the drawings.

   (4) Anchor bolt spacing using anchor bolt and bolt circle limitations shown on the drawings.

   (5) Camber requirements.

   (6) Guy locations, ultimate load, size, and capacity.

   (7) Guy anchor type and capacity.

   (8) Guy hardware and anchor catalog data sheets.

3. MILL TEST REPORTS: Prior to material shipment, and as soon as practicable after contract award, submit certified copies of test reports of structural steel, bolts, nuts, and the chemical analyses and coating test of the galvanizing.

   Certified mill test reports for steel shapes and plates shall show customer's order, mill order, and Western specifications number. Mill certification shall show the weights of steel furnished for each

size and heat number represented by the tests. No material shall be shipped until Western has received certified mill test reports.

4. WELDING SUBMITTALS:

   (1) Prior to fabrication, submit all weld procedures which are not prequalified in accordance with AWS D1.1, "Structural Welding Code".

   (2) Prior to fabrication submit a test and evaluation procedure describing the method to be used to verify penetration of partial penetration welds.

   (3) Submit nondestructive and metallographic test reports, including ultrasonic test pieces and metallographic weld samples, within 20 working days after tests are performed.

5. DULLING TREATMENT SUBMITTALS:

   (1) Chemical composition of dulling treatment.

   (2) Application procedure.

   (3) Two sets of three samples each, representing the reflectance specified in the project specifications. Each sample shall be a dulled-galvanized steel panel, 3 inches x 6 inches x 1/4-inch-thick, and have the respective percent of reflectance stamped into the metal.

   (4) Approved samples shall constitute comparison standards for dulled-galvanized steel inspection.

6. PAINTING SUBMITTALS:

   (1) Paints: Manufacturer's technical information including color chips, paint label analysis, surface preparation, spread rates, thinning instructions, coverage of paint, recommended number of coats, and application instructions.

   (2) Material safety data sheets (MSDS) for each paint, oil, epoxy, and other hazardous material.

7. APPROVAL DRAWINGS: Prior to fabrication, submit for approval, drawings covering each type and height of structure. Submittal shall include:

   (1) Erection Drawings Showing the Following:

      1) Dimensions.

      2) For Each Structure Component: Mark number, position, size, weight, material, and location.

      3) For Each Bolted Connection: Quantity, type (grade), and size of bolts.

      4) A complete bill of materials, including hardware and weights, listing all material for one structure or the portion shown thereon. Show the number of pieces required, description of each piece, including size and length, and drawing number on which the shop detail of each piece can be found. Total weight of one complete structure shall be noted. Calculate weights in accordance with LRFD, "AISC Code of Standard Practice for Steel Buildings and Bridges", except that weights for nonrectangular plates and shapes are to be based on actual detailed dimensions shown on the final shop drawings.

5) Weight, center of gravity, lifting lug locations or lifting method, and lifting point of each major structure component.

6) Camber requirements. Camber orientation shall reference direction of transmission line.

7) Foundation auger diameter and embedment depth for direct-embedded structures.

8) Anchor bolt setting plan, size, and quantity. Setting plan shall reference direction of transmission line and camber.

9) Plan view showing orientation of each structure in relation to centerline of transmission line.

10) Location, edge preparation details, and material for each field weld.

11) Method for permanently restraining slip-joints after installation for H-frame structures.

12) Guy pretension loads.

13) Guy locations, arrangements, and attachment details.

14) Guy anchors and installation details.

15) Structure number sign and identification plate locations.

16) Plan and elevation views for each structure type showing exact location of fixed climbing rung sections, clips for removable climbing rung sections, attachments for removable steps, belt loops, hand loops, ladder brackets, and ring clips.

17) Splice designs and attachment details for fixed climbing rung sections.

(2) Shop Detail Drawings Showing the Following:

1) All structure components and connections.

2) Anchor bolts.

3) Location, edge preparation details, and material for each shop weld.

4) Ground plate locations in accordance with drawing 41 1015.

5) Mounting nut locations for structure signs in accordance with drawings 41 9027 and 41 9028, or as specified in the project specifications.

6) Details of fixed and removable climbing rung sections, rungs, clips for fixed and removable climbing rung sections, removable steps and attachments, belt loops, hand loops, ladder brackets, ring clips, the attaching welds, and work rings.

(3) All Drawings Shall Show the Following:

1) Western specifications number and project title.

2) Specific Western structure type(s) shown or referenced on each drawing.

3) Type and grade of material (ASTM specification) and structure finish (i.e., galvanized, dulled galvanized, Metallized, weathering-steel, or painted-over-galvanized).

8. FINAL DRAWINGS: Before final payment, furnish final as-built drawings and bill of materials required in 7 above.

9. SUBMITTAL REQUIREMENTS: Submit electronic versions of data and drawings for approval as follows:

   (1) Design Data: Forward one electronic set to the Civil Engineer. Send a copy of the transmittal letter to the COR. If design calculations exceed 100 pages in length, send a hard copy via certified mail to the Civil Engineer in addition to the electronic version.

   (2) Mill Test Reports: Forward one electronic copy of each report to the Civil Engineer.

   (3) Welding Submittals: Forward one electronic set to the Civil Engineer.

   (4) Dulling Treatment Submittals: Forward one electronic set to the Civil Engineer and the COR.

   (5) Painting Submittals: Forward one electronic copy to the Civil Engineer and the COR.

   (6) Approval Drawings: Forward one electronic set of prints to the Civil Engineer, and send a copy of the transmittal letter to the COR.

   (7) Final Drawings: Forward one electronic set to the Civil Engineer.

5.1.2 DESIGN REQUIREMENTS:

1. GENERAL: Design using published theories accepted by industry as good engineering practice. Design so that ultimate stresses do not exceed the material yield stress. Design yield strength for structural steel plates shall not exceed 65 ksi. Check material stresses for each load case shown on the drawings.

2. DESIGN GUIDES:

   (1) ASCE Standard 48-05, "Design of Steel Transmission Pole Structures".
   (2) AISC "Manual of Steel Construction - Load and Resistance Factor Design" (LRFD).
   (3) AWS D1.1, "Structural Welding Code".
   (4) National Electric Safety Code (NESC).

3. SPECIFIC REQUIREMENTS:

   (1) Steel Pole Structures:

      1) Pole shafts shall be closed shapes and tapered consistent with strength requirements.

      2) Davit arms and crossarms shall be closed shapes and shall provide the electrical clearances shown on the drawings

      3) Brackets and braces may be open or closed shapes and shall provide the electrical clearances shown on the drawings.

      4) Structural steel shall not be less than 3/16-inch thick, except for structure identification plates.

      5) Design direct-embedded structures assuming pole shaft fixity at a point 5 feet below ground line.

      6) Design anchor-bolted structures assuming a 1° rotation at the base plate.

7) Perform second-order (geometrically-nonlinear) elastic analyses to accommodate stresses from structure deflection (secondary bending) and guy loads.

8) Camber single-shaft self-supporting structures with line angles and/or unbalanced tensions so that the structure axes are vertically plumb after conductors are strung. Camber less than 6 inches is not required. The bottom section of direct-embedded pole shafts shall not be cambered. Western will furnish camber loads within 30 days after contract award.

9) Structure designs shall account for the weight and projected wind area of all maintenance provisions.

10) Thickness of flange plates shall be designed assuming loads are transferred directly by point loads through bolts, and not by bearing between the flange plates.

11) Guyed structure design shall accommodate the possibility that one or more guys will be moved, in line, a maximum of 5 feet closer to or further from the structure than shown on the guying arrangement plans.

12) Sections joined by slip joints shall have a minimum lap of 1.5 times the largest inside diameter of the female section. Use complete penetration welds in the female splice area. Shims shall not be used in slip joints. Slip joints on H-frame structures shall be permanently restrained from movement after installation.

13) Bottom pole shaft base sections for direct-embedded structures shall extend a sufficient distance above ground line so that bottom jacking lugs (normally 1-inch-diameter heavy hex nuts) are a minimum of 3 feet above ground line to allow room to install jacks above top of concrete and jack sections together.

14) Galvanized, dulled galvanized, and painted-over-galvanized structures shall be capped at the top.

15) Pole shaft base sections for weathering-steel and Metallized structures shall be hermetically sealed.

16) Galvanized tubular members shall have vent holes at both ends to allow air circulation after installation. Direct-embedded galvanized pole shafts shall have two 1-inch-diameter vent holes 2 feet above ground line.

17) Bottom 2 feet and base of direct-embedded pole shafts shall be coated with polyurethane coating in accordance with Section 5.1.14, "Polyurethane Coating".

18) Base plates for anchor-bolted structures shall not overhang the concrete foundations.

19) Structure sections and complete structures shall have approved method to prevent slippage of slings and ensure safe lifting and handling.

20) Structure number signs shall not interfere with installation of removable climbing rung sections or removable steps.

21) Hole locations and spacing shall be within tolerances specified in Section 5.1.5, "Quality Control".

22) Contractor shall determine details not shown on the drawings based on the intended use and fabricator's recommendations.

(2) Guys and Guy Anchors:

1) Determine optimum guy size and arrangement best suited for the structure required. Locate guys to provide the following minimum electrical clearances:

Voltage (kV)	Clearance (IN)
34.5	30
69	42
115	60
230	91
345	115
500	152

2) Treat guys as elastic members in structure analyses. Modulus of elasticity for design of guy material shall be 23,000 ksi. Under maximum design loading, guy tensions shall not exceed 65 percent of the minimum rated breaking strength.

3) Guy hardware and structure attachments shall be capable of supporting the minimum rated breaking strength of attached guys. Steel hardware shall be galvanized or galvanized and dulled in accordance with Section 5.1.9, "Galvanizing" and 5.1.10, "Dulled Galvanizing".

4) Guys and guy vangs shall not interfere with maintenance provision installation.

5) Determine number and type of guy anchors. Guy anchors shall develop the minimum rated breaking strength of attached guys. No more than two guys shall be attached to any one anchor.

6) Minimum guy anchor spacing shall be 8 feet.

(3) Maintenance Provisions:

1) Dimensions and details for maintenance provisions shall be as shown on drawings 43 2203, 43 2206, 43 2207, 43 2208, 43 2209, and 43 2210, unless otherwise specified in the project specifications.

2) Welds to attach maintenance provisions to structures shall develop the ultimate tensile strength of the attached part.

3) Minimum height above ground line for bottom clip for removable climbing rung sections for direct-embedded structures shall be 27 inches to allow room to install bottom removable climbing rung section above top of concrete. Minimum height above base plate for bottom clip for removable climbing rung sections for base-plated structures shall be 7 inches.

4) Rungs for fixed and removable climbing rung sections shall be secured either by welding or with nuts and locknuts.

5) Removable climbing rung sections shall be identical.

6) Expansion anchors to attach clips for removable climbing rung sections to concrete foundations shall develop a minimum tensile strength of 2,000 pounds.

7) Fixed climbing rung sections shall be spliced together to form a continuous center support for the full height of the structure. Splices shall be designed to ensure full structural continuity of the center support. Splices shall provide smooth transitions with the center support and afford minimum interference with the gripping surface for the hands. Sharp edges or lateral projections on splices shall not be permitted.

8) Top or bottom cantilevered extensions of fixed climbing rung sections shall not extend more than 27 inches beyond the nearest clip.

4. EMBEDMENT DESIGN FOR DIRECT-EMBEDDED STRUCTURES:

(1) Auger Diameter: Auger diameter shall be pole shaft base diameter plus a minimum of 12 inches, unless otherwise specified in the project specifications.

(2) Embedment Depth: Structure embedment depth, "E", shall be as listed in the project specifications under "Normal" unless rock is encountered.

If rock is encountered, structure embedment depths may be reduced to the overburden depth plus "Keyed Into Rock" depth listed in the project specifications.

Rock is defined as a massive or stratified cemented formational material having a standard penetration test (SPT) "N" value of 100 or more throughout and below the entire embedment depth.

5.1.3 GROUNDING REQUIREMENTS:

1. GENERAL: All connections on all structures shall provide for electrical continuity across the connections, and an electrical path shall be provided from every part of the structure to the ground. Grounding requirements will vary with the type of material and structure finish and shall be in accordance with drawing 41 1015 and this section.

2. GALVANIZED, DULLED GALVANIZED, AND METALLIZED STRUCTURES:

(1) Pigtail jumpers and ground plates are not required on galvanized, dulled galvanized, or Metallized structures that are direct-embedded with concrete backfill or installed on concrete foundations.

(2) Pigtail jumpers and ground plates are required 2 feet above ground line on galvanized, dulled galvanized, and Metallized pole shafts that are direct-embedded with native backfill.

3. WEATHERING-STEEL STRUCTURES:

(1) Weathering-steel structures shall have pigtail jumpers and ground plates welded on either side of all slip joints and bolted connections, including davit arm and post insulator connections, and 2 feet above ground line or 6 inches above base plate on all pole shafts in accordance with drawing 41 1015.

(2) After installing fixed and inclined climbing rung sections with bolts, nuts, and locknuts or lockwashers, the rung section mounting plates shall be shop-welded to the clips on the pole shafts in accordance with drawings 41 1015 and 43 2210. Welding shall be sufficient to provide electrical continuity between the climbing rung sections and the pole shaft.

4. PAINTED-OVER-GALVANIZED STRUCTURES: Pigtail jumpers and ground plates are required 2 feet above ground line on all pole shafts of painted-over-galvanized structures that are direct-embedded with native backfill.

Pigtail jumpers and ground plates are not required at other locations on painted-over-galvanized structures provided the following surfaces of the structures are not painted; i.e., masked, or otherwise protected from paint, to ensure the electrical continuity of the structure:

(1) Faying surfaces shall not be painted, including:

1) Areas inside slip joints: Outside surfaces of male (bottom) sections and inside surfaces of female (top) sections.

2) Arm connections: Outside surfaces of arm connection vangs and inside surfaces of arm brackets.

3) Attachment plates for fixed climbing rung sections: Outside surfaces of clips for fixed climbing rung sections and faying surfaces of rung section mounting plates.

4) Interior surfaces of clips for removable climbing rung sections.

5) Post insulator mounting brackets: Exterior surfaces of mounting brackets.

(2) Overhead ground wire attachment plates.

(3) Portions of galvanized pole shafts that will be below ground line.

(4) If any of the above surfaces are painted, the grounding requirements for weathering-steel structures shall apply, and paint shall be removed from the overhead ground wire attachment plates.

5.1.4 MATERIAL:

1. POLE SHAFTS, DAVIT ARMS, AND CROSSARMS:

(1) Galvanized, Dulled Galvanized, Metallized, or Painted Steel: ASTM A 572 or ASTM A 871.

1) Material shall have a minimum longitudinal impact strength of 15 foot pounds at minus 20°F as determined by the Charpy "V" Notch Impact test in accordance with ASTM A 370 and A 673.

2) Silicon content of pole shaft material shall be either below 0.06 percent or between 0.15 and 0.35 percent.

3) Galvanize, galvanize and dull, Metallize, or paint material after fabrication in accordance with Sections 5.1.9, "Galvanizing", 5.1.10, "Dulled Galvanizing", 5.1.11, "Metallizing", or 5.1.13,"Painting".

(2) Weathering Steel: ASTM A 871.

1) Material shall have a minimum longitudinal impact strength of 15 foot pounds at minus 20°F as determined by the Charpy "V" Notch Impact test in accordance with ASTM A 370 and A 673.

(3) Structural Tubing:

1) Galvanized, Dulled Galvanized, Metallized, or Painted Steel: ASTM A 500, Grade B.

2) Weathering Steel: ASTM A 847.

3) Material shall have a minimum longitudinal impact strength of 15 foot pounds at minus 20°F as determined by the Charpy "V" Notch Impact test in accordance with ASTM A 370 and A 673.

2. BASE PLATES AND CONNECTION PLATES:

(1) Galvanized, Dulled Galvanized, Metallized, or Painted Steel: ASTM A 572, ASTM A 588, ASTM A 633, or ASTM A 871.

(2) Weathering Steel: ASTM A 588 or ASTM A 871.

(3) Material shall have a minimum longitudinal impact strength of 15 foot pounds at minus 20°F as determined by the Charpy "V" Notch Impact test in accordance with ASTM A 370 and A 673.

3. X-BRACES AND MISCELLANEOUS STRUCTURAL STEEL:

(1) Galvanized, Dulled Galvanized, Metallized, or Painted Steel: ASTM A 36, ASTM A 242, ASTM A 572, ASTM A 588, ASTM A 633, or ASTM A 871.

(2) Weathering steel: ASTM A 242, ASTM A 588, OR ASTM A 871.

(3) Material shall have a minimum longitudinal impact strength of 15 foot-pounds at minus 20°F as determined by the Charpy "V" Notch Impact test in accordance with ASTM A 370 and A 673.

4. CONNECTION BOLTS, NUTS, LOCKNUTS, AND LOCKWASHERS:

(1) Galvanized, Dulled Galvanized, or Painted Steel:

1) Bolts: ASTM A 325, ASTM A 354, Grade BC, or ASTM A 394, Type 1.

2) Locknuts: Palnuts (regular), Type MF No. 1 (regular or square).

3) Lockwashers: ASTM F 436.

4) Galvanize or galvanize and dull material after fabrication in accordance with Sections 5.1.9, "Galvanizing" and 5.1.10, "Dulled Galvanizing". Material for painted structures shall be galvanized, then painted in accordance with Section 5.1.13, "Painting", except lockwashers do not require painting.

(2) Weathering Steel:

1) Bolts: ASTM A 325, Type 3, ASTM A 354, Grade BC Modified, or ASTM A 394, Type 3.

2) Locknuts: Palnuts (regular), Type MF No. 1 (regular or square). Locknuts shall be galvanized in accordance with Section 5.1.9, "Galvanizing", then prime-coated to match weathering-steel finish.

3) Lockwashers: ASTM F 436. Lockwashers shall be galvanized in accordance with Section 5.1.9, "Galvanizing".

5. ANCHOR BOLTS, NUTS, AND WASHERS:

(1) Anchor Bolts: ASTM A 615, Grade 75, modified, equal to NORSCO 75S high-strength anchor bolt material.

(2) Nuts: ASTM A 194, Grade 2H or ASTM A 563, Grade DH.

(3) Washers: ASTM F 436 Type 1.

(4) Galvanize nuts, washers, and anchor bolts for the thread length plus 6 inches in accordance with Section 5.1.9, "Galvanizing".

6. GROUND PLATES:

(1) Galvanized, Dulled Galvanized, Metallized, or Painted-Over-Galvanized Structures: ASTM A 36, ASTM A 572, or ASTM A 633, galvanized, Metallized, or stainless steel conforming to an applicable ASTM standard suitable for the intended use. Stainless steel threaded inserts welded to the pole shafts may be substituted for the ground plates shown on drawing 41 1015.

(2) Weathering-Steel Structures: Stainless steel conforming to an applicable ASTM standard suitable for the intended use.

7. U-BOLTS AND CHAIN LINKS: ASTM A 36, galvanized.

8. ARC-WELDING ELECTRODES: Arc-welding electrodes shall be in accordance with AWS D1.1.

9. PAINT SYSTEM: Paint system shall be chemical, corrosion, and abrasion resistant and shall produce the color and finish specified in the project specifications. All paint system components shall be from the same manufacturer. Paint system shall be approved by the COR and the Civil Engineer.

10. POLYURETHANE COATING: Corrocote Plus as manufactured by Madison Chemical Industries, Inc., 490 McGeachie Drive, Milton, Ontario, Canada L9T 3Y5.

11. GUYS: ASTM A 475, Class B, or A 586, Class B, galvanized.

12. GUY HARDWARE: Hardware shall be galvanized and of the type and manufacturer's rated strength as shown on the Contractor-furnished data and drawings. Hardware shall conform to an applicable ASTM standard suitable for the intended use.

13. STEEL GUY ANCHORS AND RODS: Anchors and rods shall be galvanized and of the type and manufacturer's rated strength as shown on the Contractor-furnished data and drawings. Rods for disk and plate-type anchors shall be coated with an approved corrosion-preventive, nonconductive material.

14. CONCRETE GUY ANCHORS: Concrete requirements shall be in accordance with Construction Standard 3 - Concrete.

15. FIXED AND REMOVABLE CLIMBING RUNG SECTIONS:

(1) Structural Tubing:

1) Galvanized, Dulled Galvanized, Metallized, or Painted Steel: ASTM A 500.
2) Weathering Steel: ASTM A 242, ASTM A 588, or ASTM A 847.

(2) Rungs:

1) Galvanized, Dulled Galvanized, Metallized, or Painted Steel Structures: ASTM A 325, ASTM A 354, Grade BC, or ASTM A 394, Type 1. Galvanize, galvanize and dull, or

Metallize rungs after fabrication in accordance with Sections 5.1.9, "Galvanizing", 5.1.10, "Dulled Galvanizing", or 5.1.11, "Metallizing". Rungs for painted structures shall be galvanized or Metallized, but shall not be painted to protect the knurling.

2) Weathering Steel: ASTM A 325, Type 3, ASTM A 354, Grade BC Modified, or ASTM A 394, Type 3.

3) Rungs shall be corrugated, knurled, dimpled, or otherwise treated to minimize slipping. Coating with skid-resistant material is not acceptable. Acceptable rungs are knurled rungs as manufactured by BBC Fasteners, Inc., 4210 Shirley Lane, Alsip, IL 60658.

16. CLIPS FOR FIXED AND REMOVABLE CLIMBING RUNG SECTIONS, BELT LOOPS, HAND LOOPS, LADDER BRACKETS, AND RING CLIPS:

(1) Galvanized, Dulled Galvanized, Metallized, or Painted steel: ASTM A 36.
(2) Weathering steel: ASTM A 242, ASTM A 588, or ASTM A 871.

17. WORK RINGS: ASTM A 36. Galvanize material after fabrication in accordance with Section 5.1.9, "Galvanizing".

18. REMOVABLE STEPS AND ATTACHMENTS:

(1) Removable Steps: A.B. Chance "Detachable Pole Step", catalog No. 6236.

(2) Attachments: A.B. Chance "Bolt and Plate Detachable Step Attachment for Metal Pole", catalog No. T205-0425.

1) Attach the bolts to galvanized pole shafts with internally threaded 1/2 inch diameter 13 UNC rivet-nut fasteners, as manufactured by Atlas Engineering, Inc., 348-A Geneva Avenue, Tallmadge, OH 442678.

2) Submit details for attaching the bolts to weathering-steel pole shafts. Holes shall not be drilled in weathering-steel shafts.

19. STRUCTURE IDENTIFICATION PLATES:

(1) Galvanized, Dulled Galvanized, Metallized, or Painted Steel: ASTM A 36.
(2) Weathering Steel: ASTM A 242, ASTM A 588, or ASTM A 871.
(3) Minimum plate thickness shall be 1/8 inch.

5.1.5 QUALITY CONTROL:

1. GENERAL: Contractor shall have defined quality control methods and functions available for review and approval. Maintain permanent records on mill test reports, weld procedures, welding operators, qualifications for welders and tack welders, inspector test results, and visual and nondestructive test records.

   Structure components and welds shall be inspected to determine conformance to contract requirements, drawings, codes and standards, and procedures, including dimensional compliance, quality of welds, weld contour, weld size, and overall workmanship.

2. WORKMANSHIP AND DEFECTIVE MATERIAL: Work shall be equal to best modern practice in the manufacture and fabrication of material. Design details, fabrication, and erection not covered by the drawings or these specifications shall conform to LRFD and ASCE Standard 48-05, "Design of Steel Transmission Pole Structures". Contractor shall be responsible for correct fitting of parts and shall replace defective material discovered during erection.

3. INSPECTION AND TESTS: Inspection of material will be made in accordance with Construction Standard 1 - General Requirements, Section 1.2.3, "Material Inspection". Western inspection of material at the mill will be waived.

4. DIMENSIONAL TOLERANCES: Allowable variations from specified dimensions are as follows:

   (1) Overall Length of Structure: Minus 12 and plus 24 inches.

   (2) Length of Component Pole Shaft Sections: Plus or minus 3 inches.

   (3) Structure Cross Section:

      1) Diameters 36 inches or less: Minus 1/8 and plus 1/4 inch.
      2) Diameters greater than 36 inches: Minus 1/4 and plus 1/2 inch.
      3) Circumference of all sections: Minus 0 inch.

   (4) Vertical Spacing Between Conductor Attachment Points and Ground Wire Attachment Points: Plus or minus 1 inch.

   (5) Straightness of Structure: 1/8 inch in 10 feet of length.

   (6) Location of Drilled Holes: Plus or minus 1/16 inch.

   (7) Hole Spacing on Same Connection: Plus or minus 1/16 inch (non-accumulative).

   (8) Maximum Difference Between Interior Width of Arm Brackets and Exterior Width of Arm Mounting Boxes or Vangs: 1/2 inch.

   (9) Maximum Gap Between Mating Flange Plates Before Installing Bolts: 1/2 inch.

   (10) Length of Davit Arm or Crossarm: Plus or minus 1 inch.

   (11) Length of Overlap of Slip Joint: Minus 6 and plus 12 inches.

   (12) Variance in Longitudinal Location of Insulator Attachment at End of Davit Arm or Crossarm: Plus or minus 2 inches per 10 feet of arm length or 1 degree from theoretical location.

   (13) Camber: Plus or minus 1 inch per 16 inches of specified camber.

   (14) Structure Identification Plate Location: 6 feet, plus or minus 1 foot, above ground line.

   (15) Vertical Location of Guy Attachment Points with Respect to Insulator and Ground Wire Attachment Points: Plus or minus 1 inch.

   (16) Variation in Vertical Distance Between Insulator Attachments and Horizontal Planes of Hand Loops, Belt Loops, and Ring Clips: Plus or minus 1/2 inch.

   (17) Variation in Vertical Positioning of Hand Loops, Belt Loops, or Ring Clips Located in the Same Horizontal Plane: Plus or minus 1/4 inch.

   (18) Horizontal Spacing of Hand Loops, Ladder Brackets, Belt Loops, and Ring Clips: Plus or minus 1/2 inch.

   (19) Clear Dimensions: Minus 0 and plus 1/2 inch.

(20) Bend Radii: Plus or minus 1/16 inch.

(21) Dimensions for Ring Clips and Clips for Removable Climbing Rung Sections: Plus or minus 1/16 inch.

(22) Dimensions for Fixed and Removable Climbing Rung Sections, Clips for Removable Climbing Rung Sections, Hand Loops, Ladder Brackets, and Belt Loops: Plus or minus 1/4 inch.

(23) Vertical Spacing of Rungs for Fixed and Removable Climbing Rung Sections, Attachments for Removable Steps, and Vertical Spacing Between Top Rung of Top Removable Climbing Rung Sections and Bottom Rung of Bottom Fixed Climbing Rung Sections: 12 inches plus or minus 1/2 inch.

(24) Work Rings:

1) Dimensions Noted on Drawing 43 2203 Greater Than 3 Inches: Plus or minus 1/8 inch.

2) Dimensions Noted on Drawing 43 2203 Less Than or Equal to 3 Inches: Plus or minus 1/16 inch.

Tolerances not listed above shall be in accordance with applicable codes and standards.

5.1.6 FABRICATION:

1. GENERAL: Plates shall be edge-planed or flame-cut with mechanically guided torches.

2. STRAIGHTENING MATERIAL: Before being laid out or worked in any manner, structural material shall be straight, free from sharp kinks and bends, and clean of rust and dirt. Straightening operations shall not damage metal.

3. SHEARING AND CUTTING: Shearing and cutting shall be neatly finished on material exposed to view. Copes and re-entrant cuts shall be filleted before cutting.

4. HOLES:

(1) General: Holes in steel less than 13/16-inch-thick may be punched to full size unless otherwise shown on the drawings. Holes shown on the drawings as drilled holes and holes in steel 13/16-inch-thick or greater shall be drilled or subpunched and reamed. Holes shall be clean-cut and without torn or ragged edges. Burrs resulting from reaming or drilling shall be removed with a tool making a 1/16 inch chamfer. Holes shall be cylindrical and perpendicular to the member. Holes within 4 inches of bend lines shall be made after bending.

(2) Punching: For hole punching to full size, the punch diameter shall be the nominal hole diameter, and the die diameter shall not be more than 1/16 inch larger than the punch diameter. For subpunching, the punch diameter shall be 1/4 inch smaller than the nominal hole diameter, and the die diameter shall not be more than 3/32 inch larger than the punch diameter. Subpunched and reamed holes shall not have a punched surface in the hole periphery.

(3) Reaming and Drilling: Finished hole diameter for reamed or drilled holes shall be as shown on the drawings.

5. EDGE DISTANCES AND BOLT SPACING: Edge distances and bolt spacing shall be in accordance with LRFD unless otherwise shown on the drawings.

6. POLE SHAFT-TO-BASE PLATE AND POLE SHAFT-TO-FLANGE PLATE CONNECTIONS: Welds to attach pole shafts to base plates and flange plates shall be complete penetration with backing bars.

7. CROSSARM-TO-ARM BRACKET AND DAVIT ARM-TO-ARM BRACKET CONNECTIONS: Welds to attach crossarms and davit arms to arm brackets and flange plates shall be complete penetration with backing bars.

8. COLD FORMING: Contractor shall have documented, detailed procedures describing cold forming methods to produce bends without cracking. Cracking or opening of surface laminations shall be investigated and repaired. Repairs shall be inspected and recorded. Plates with cracks, laminations, or lamellar tears shall be rejected. Minimum inside radii of bends shall be equal to or greater than specified by LRFD.

9. WELDING:

   (1) General: Welding shall be performed in accordance with AWS D1.1. Use a shielded arc welding process. Welds shall be as shown on the shop drawings and made so that residual shrinkage stresses will be a minimum. If not previously qualified, the weld procedure, welders, welding operators, and tack welders shall be qualified in accordance with AWS D1.1.

   (2) Longitudinal partial penetration seam welds shall be performed with an automatic submerged arc welding process and shall have 80 percent minimum penetration through the material thickness, except welds within 6 inches of base plates, flange plates, and arm brackets shall be complete penetration. The root opening for longitudinal seam welds shall be considered zero, with a variance of 1/16 inch allowed for dimensional tolerance. Backing material is not permitted for longitudinal seam welds.

   (3) A written weld procedure for longitudinal partial penetration seam welds shall be submitted and approved prior to fabrication.

5.1.7 NONDESTRUCTIVE AND METALLOGRAPHIC WELD TESTS:

1. GENERAL: Inspect welds and perform tests in the presence of a Western inspector and in accordance with AWS D1.1 or procedures approved by the Civil Engineer. Repair and reexamine defective welds in accordance with AWS D1.1. Notify the Civil Engineer a minimum of 7 working days prior to beginning weld tests.

2. VISUAL INSPECTION: In addition to the tests required below, visually inspect welds in accordance with AWS D1.1.

3. ULTRASONIC AND RADIOGRAPHIC TESTS FOR COMPLETE PENETRATION WELDS: Perform ultrasonic or radiographic tests on the entire length of each complete joint penetration shop and field weld in accordance with AWS D1.1. Perform tests after galvanizing for complete joint penetration welds used at T-joints, as defined by AWS D1.1, where the thicker plate is more than three times the thickness of the thinner plate. Otherwise, tests can be performed before galvanizing.

4. ULTRASONIC AND METALLOGRAPHIC TESTS FOR PARTIAL PENETRATION WELDS: Perform either ultrasonic or metallographic tests for partial penetration welds.

   (1) Ultrasonic Tests: Perform ultrasonic tests in accordance with AWS D1.1 or procedures approved by Western. Prepare a test piece with the same weld joint configuration and 80-percent weld penetration for each thickness of material to be tested. Verify the weld procedure and test procedure with actual weld penetration of test pieces. Spot test a

minimum of 10 percent of each length of partial penetration weld at random intervals, with no test length exceeding 12 inches.

(2) Metallographic Tests: Perform metallographic tests using a test lab approved by Western. For each tubular piece mark number, remove a weld sample from the first tubular section and from every tenth section thereafter. Remove samples by core drilling, and plug the holes with complete penetration welds without permanent backing material. Test procedure shall include a sample report form for documenting test results which shall include the following:

1) Western contract number.
2) Structure type and piece mark number.
3) Material thickness.
4) Name, location, email address, and telephone number of test lab.
5) A sketch showing location of removed weld samples.
6) Actual weld penetration of samples.

5. MAGNETIC PARTICLE AND DYE PENETRANT TESTS: The COR may require magnetic particle or dye penetrant weld tests where cracking is suspected. Perform magnetic particle tests in accordance with ASTM E 709. Perform dye penetrant tests in accordance with ASTM E 165. Acceptance standards for the tests shall be in accordance with AWS D1.1.

5.1.8 MARKING:

1. STRUCTURE COMPONENTS:

(1) Mark structure components with the designations shown on final erection drawings. Stamp or weld markings into the steel before painting, galvanizing, or Metallizing. The markings shall be 1/2 inch minimum height and clearly legible after painting, galvanizing, or Metallizing. Mating pole shaft sections shall be match marked to ensure correct orientation and camber.

(2) Stamp the total weight of individual pole shaft sections at the base of each section.

2. STRUCTURE IDENTIFICATION PLATE: Identify each structure with an identification plate located approximately 6 feet above ground line.

(1) Stamp the following information into the plates using numerals and letters not less than 1/4 inch high:

1) Manufacturer's name.
2) Month and year of fabrication.
3) Structure designation.
4) Complete structure weight in pounds.
5) Ultimate ground line or base moment capacity in kip-feet.

(2) Plates shall be welded all-around to the pole shafts before painting, galvanizing, or Metallizing. The numerals and letters shall be clearly legible after painting, galvanizing, or Metallizing.

5.1.9 GALVANIZING:

1. CLEANING: After shopwork completion, clean material of rust, loose scale, dirt, oil, grease, and other foreign substances. Clean all slag from welded areas.

2. PLATE AND SHAPE GALVANIZING: After fabrication and cleaning, galvanize plates and shapes in accordance with ASTM A 123. Double dipping or progressive dipping of closed-member shapes shall not be permitted. After galvanizing, pole shaft sections shall not have lateral

variations greater than 1/1000 the axial length of the section. Holes shall be free of excess spelter after galvanizing.

3. HARDWARE GALVANIZING: Galvanize bolts, nuts, washers, locknuts, and lockwashers in accordance with ASTM A 153. Remove excess spelter by centrifugal spinning.

4. STRAIGHTENING AFTER GALVANIZING: Plates and shapes which have been warped by the galvanizing process shall be straightened by rerolling or pressing. Material shall not be hammered or straightened in a manner that will damage the galvanizing. Material that has been harmfully bent or warped, in the opinion of the COR, shall be rejected.

5. GALVANIZING REPAIR: Material with damaged galvanizing shall be redipped unless the damage is local and can be repaired. If the galvanized coating becomes damaged after being dipped twice, the material shall be rejected. Where repair is authorized, the damaged area shall be repaired in accordance with ASTM A 780, except the minimum coating thickness shall be 3 mils.

5.1.10 DULLED GALVANIZING:

1. DULLING TREATMENT: Exposed surfaces of galvanized steel structures, including connection and anchor bolts, nuts, washers, locknuts, lockwashers, and visible portions of embedded material shall be given an approved dulling treatment to provide a gray or blackish-gray coloration. Treatment shall dull the shine and reflectance of surfaces and provide a uniform appearance for all treated surfaces. Soft or water-soluble surface deposits resulting from the treatment shall be removed by rinsing. Treatment shall have a life of at least 1-year and not be detrimental to the service life of the protective zinc coating. Dulled surfaces shall be free of white rust (zinc oxide).

2. REFLECTANCE: Finished steel shall maintain a reflectance no greater than that specified in the project specifications, plus or minus 3 percent. Reflectance shall be measured utilizing any reflectometer calibrated against "Neutral Matte Finish" color standards obtainable from Munsell Color, GretagMacbeth, 617 Little Britain Road, New Windsor, NY 12553-6148. The reflectometer shall have a margin of error no greater than plus or minus 3 percent.

5.1.11 METALLIZING:

1. GENERAL: Metallizing shall be in accordance with AWS C2.2, "Recommended Practice for Metallizing with Aluminum and Zinc for Protection of Iron and Steel". Structures shall be metallized with zinc and have a minimum coating thickness of 6 mils. Zinc shall have a minimum purity of 99.9 percent.

2. SURFACE PREPARATION: After fabrication, blast clean steel in accordance with Steel Structures Painting Council Surface Preparation Specification SSPC-SP 5, "White Metal Blast Cleaning".

3. ANCHOR-BOLTED STRUCTURES AND DIRECT-EMBEDDED STRUCTURES WITH CONCRETE BACKFILL: If any portion of a pole shaft above ground line is metallized, the entire structure above ground line shall be Metallized so that all visible surfaces match.

5.1.12 WEATHERING-STEEL FINISH:

After fabrication, blast clean steel in accordance with Steel Structures Painting Council Surface Preparation Specifications as follows:

1. DIRECT-EMBEDDED STRUCTURES WITH CONCRETE BACKFILL:

   (1) Top of Structure to 3 Feet Above Bottom of Structure: SSPC-SP 7, "Brush-Off Blast Cleaning".

(2) Bottom 3 Feet of Structure: SSPC-SP 6, "Commercial Blast Cleaning".

2. ANCHOR-BOLTED STRUCTURES: SSPC-SP 7, "Brush-Off Blast Cleaning".

5.1.13 PAINTING:

1. GENERAL: Provide material and equipment, clean surfaces, and apply paint to all structure components, except as noted below, in accordance with the manufacturer's instructions and this paragraph. Prevent dust or other contamination from falling on wet, newly painted surfaces, and do not move components until paint is thoroughly dry. Painted surfaces shall have uniform texture and color-matched appearance.

   Repair paint on steel pole structures which is damaged or removed due to ground plate installation, welding, transport to work sites, storage at the work sites, installation, or any other Contractor's operation. Reclean exposed surfaces and reapply paint as necessary to restore damaged and bare surfaces to the specified condition. Painting materials shall be handled, used, stored, and disposed of according to Federal, State, and local regulations.

2. SURFACE PREPARATION AND APPLICATION: Surface preparation and application shall be in accordance with manufacturer's recommendations.

3. SURFACES NOT TO BE PAINTED: The following areas of the structures shall be masked or otherwise protected from paint to ensure the electrical continuity of the structures:

   (1) Areas inside slip joints: Outside surfaces of male (bottom) sections and inside surfaces of female (top) sections.

   (2) Arm connections: Outside surfaces of arm connection vangs and inside surfaces of arm brackets.

   (3) Fixed climbing rung sections: Step bolts, outside surfaces of clips for fixed climbing rung sections and faying surfaces of connection plates for fixed climbing rung sections.

   (4) Post insulator mounting brackets: Exterior surfaces of mounting brackets.

   (5) Removable climbing rung sections and interior surfaces of ring clips for removable climbing rung sections.

   (6) Overhead ground wire attachment plates.

   (7) Portions of galvanized pole shafts that will be below ground line.

   (8) Ground plates and work rings.

   If any of the above surfaces are painted, grounding requirements for weathering-steel structures listed in Section 5.1.3, "Grounding Requirements" shall apply.

5.1.14 POLYURETHANE COATING:

1. GENERAL: Minimum coating thickness and surface preparation shall be in accordance with manufacturer's recommendations. Top edge of coating shall be feathered, in lieu of masked, to prevent flaking.

Take precautions to prevent blistering of polyurethane coating. Damaged or blistered coating shall be repaired in accordance with manufacturer's recommendations prior to structure installation.

Polyurethane coating shall not be applied to ground plates.

2. DIRECT-EMBEDDED STRUCTURES WITH CONCRETE BACKFILL:

   (1) Coat bottom 2 feet of direct-embedded weathering-steel pole shafts with polyurethane coating.

   (2) Polyurethane coating is not required for galvanized, dulled galvanized, metallized, or painted-over-galvanized structures.

5.1.15 HANDLING AND TRANSPORTING:

Handle and transport steel structures and components to avoid bending or damage. Bent pieces may be used only if they are straightened without damage to the material. Pieces bent beyond repair shall be replaced. Material with damaged galvanizing, metallizing, paint, or polyurethane coating shall be replaced or repaired in accordance with Sections 5.1.9, "Galvanizing", 5.1.13, "Painting", or 5.1.14, "Polyurethane Coating". Provide wood blocking material so that unloaded materials will not be in direct contact with the ground and will remain stable (unable to roll).

5.1.16 INSTALLATION:

1. GENERAL:

   (1) Installation shall be in accordance with LRFD, "AISC Code of Standard Practice for Steel Buildings and Bridges".

   (2) Use hydraulic jacking devices for slip-joint assembly in accordance with fabricator's recommendations. All slip joints shall be jacked together.

   (3) Lubricants other than soapy water shall not be used in slip-joint assembly.

   (4) Secure all slip joints by positive mechanical means before lifting or installing structures.

   (5) Provided dimensional tolerances listed in Sections 5.1.5.4(8) and 5.1.5.4(9) in the "Quality Control" paragraph are not exceeded, spaces in bolted connections greater than or equal to 1/8 inch shall be filled with galvanized washers or ring fills before installing bolts. Assembled connections shall be in accordance with the following:

      1) Arm brackets-to-arm boxes or vangs: Spaces shall be equal on both sides of the connections.

      2) Flange plate connections: Straightness of assembled structure shall be within 1/8 inch in 10 feet of length.

   (6) Lift structures by slings attached at lifting points as shown on erection drawings.

   (7) Raking of structures shall not be permitted unless approved by Western.

   (8) Concrete backfill and reinforced concrete foundations shall cure a minimum of 14 days before stringing conductors and overhead ground wires.

(9) Remove all corrosive and foreign material, including chalk and grease marks, from structures and internally threaded portions of ground plates, including material deposited on the structures prior to and during installation.

(10) Correct installation errors and omissions, including retightening of nuts and retightening or retensioning of guys.

2. ANCHOR-BOLTED STRUCTURES:

(1) Install anchor bolts in accordance with the final erection drawings. Set anchor bolts accurately to the grade and alignment designated on the drawings.

(2) Reinforced concrete foundations shall cure a minimum of 7 days before installing structures.

(3) Set base plates level and in exact position.

3. DIRECT-EMBEDDED STRUCTURES:

(1) If a structure embedment depth is reduced due to rock, cut off the bottom of the pole shaft a length equal to the reduction in embedment depth and reweld the bearing plate to the shaft. Repair damaged galvanizing, metallizing, or polyurethane coating in accordance with Sections 5.1.9, "Galvanizing", or 5.1.14, "Polyurethane Coating".

(2) Verify structure alignment prior to concrete backfill placement to ensure correct orientation with respect to line angle and camber.

(3) After setting and aligning structures, temporarily guy or hold structures to prevent displacement during concrete backfill placement and for a minimum of 3 days thereafter.

4. GUYS AND ANCHORS:

(1) Install guys and anchors in accordance with manufacturer's recommendations. Compact backfill for guy anchor excavations in accordance with Standard 2 - Sitework, Section 2.7, "Compaction". Pretension guys as shown on the final erection drawings.

(2) Perform load tests on up to 10 percent of guy anchors to verify manufacturer's rated strength and installation methods. Anchors shall hold maximum load listed in design data for 5 minutes. Maximum allowable movement shall be 2 inches or 10 percent of helix or disk diameter, whichever is less. Number of tests and specific anchors to be tested shall be at the discretion of the COR.

(3) If it is necessary to relocate guy anchors out-of-line, or more than 5 feet from their initially approved location, prior to installation resubmit revised design data and drawings for each affected structure in accordance with Section 5.1.1, "Contractor-Furnished Data and Drawings". Minimum anchor spacing shall be 8 feet for relocated anchors.

5. MAINTENANCE PROVISIONS:

(1) Permanently install fixed climbing rung sections on structures with bolts, nuts, and locknuts.

(2) Fixed and inclined climbing rung sections on weathering-steel structures shall be grounded after installation in accordance with drawings 41 1015, 43 2210, and Section 5.1.3, "Grounding Requirements".

(3) Prior to structure delivery, trial fit work rings into every ring clip on every structure to ensure acceptable assembly. Acceptable assembly is defined as when the work rings protrude

1 inch plus or minus 1/2 inch from the bottom of the ring clips and can be installed without interference from adjacent work rings.

(4) Trial fit removable climbing rung sections into clips and removable steps into attachments on every structure.

(5) After inspection by the COR, remove all work rings, removable climbing rung sections, and removable steps and deliver for storage.

6. STRUCTURE ORIENTATION: Install tangent structures so that the transverse structure axes are perpendicular to the centerline of transmission line, and install angle structures so that the transverse structure axes are perpendicular to the line angle bisectors, except structures listed in the "Special Structure Orientation" table in the "Transmission Line Steel Pole Structures" Division of the project specifications.

7. FIELD WELDING: Field welding, including welding procedures and welders, shall be in accordance with Section 5.1.6, "Fabrication". Perform nondestructive weld tests and inspect field welds in accordance with Section 5.1.7, "Nondestructive and Metallographic Weld Tests". Clean field welds by sandblasting or power grinding.

   Repair damaged paint, galvanizing, metallizing, or polyurethane coating in accordance with the Sections 5.1.9, "Galvanizing", 5.1.13, "Painting", or 5.1.14, "Polyurethane Coating".

8. DIRECT-EMBEDDED H-FRAME STRUCTURES: If ground line elevations vary by 5 feet or less at direct-embedded H-frame legs, install structures vertically plumb so that the center conductor attachment is a distance "H" (height portion of structure designation) above ground line. If ground line elevations vary by more than 5 feet, submit revised design data in accordance with Section 5.1.1, "Contractor-Furnished Data and Drawings".

   Concrete backfill projections shall extend 18 inches above ground line for both legs of H-frame structures when concrete backfill is specified.

9. TEMPORARY GUYING REQUIREMENTS: Where conductors or overhead ground wires are temporarily dead-ended on self-supporting structures, the structures shall be guyed to remain plumb until final conductors and ground wires are strung at some future date. Variation from plumb shall not exceed 3 inches at any elevation in any horizontal direction after initial stringing.

10. VIBRATION CONTROL: Before insulators, conductors, or overhead ground wires are installed, members shall be restrained or dampened by hanging weights or insulators, if necessary, to prevent fatigue crack initiation and propagation due to fluctuating loads.

11. INSTALLATION TOLERANCES: Allowable variations from specified dimensions and locations for installed structures are as follows:

    (1) Centerline Location: Within 3 inches of theoretical centerline location.

    (2) Embedment Depth, "E": Minus 6 and plus 24 inches, where rock is not encountered; minus 3 and plus 12 inches, where rock is encountered.

    (3) Installed Height, "H": Plus or minus 12 inches.

    (4) Installed Position Prior to Stringing:

        1) Uncambered Structures: Variation from plumb shall not exceed 6 inches at top of structure in any horizontal direction.

        2) Cambered Structures: Variation from specified camber shall not exceed 6 inches at top of structure in any horizontal direction.

        3) Variation in Longitudinal Location of Conductor Attachments at End of Davit Arm: Plus or minus 2 inches per 10 feet of arm length from theoretical location.

Message from the Administrator

At Western, we show our commitment to safety every day through the actions we take, the training we offer and the work conditions we provide. We expect the same commitment to safety from each of our contractors who provide products or services to Western. In performing work for Western, all contractors must make the right decisions to ensure that the work environment is as safe as possible.

Our safety program is based on four points:

- Safety procedures or common sense must be applied by each Federal and contract employee. Safety should not be set aside to meet a project schedule or for personal convenience.

- Employees and contractors must believe that they have the right and the responsibility to identify and take action to reduce, if not eliminate, hazardous work environments and hazardous work practices.

- Managers and supervisors must lead by example and execute their responsibility to ensure each job is accomplished in a safe and healthy way.

- Safety is a personal responsibility. Each individual makes the decision on what action to take to accomplish a task.

By integrating these principles into every task we take, together we can ensure Western is a safe place to work.

Timothy J. Meeks

DEPARTMENT OF ENERGY · UNITED STATES OF AMERICA ·

Western
AREA POWER
ADMINISTRATION

CONSTRUCTION STANDARDS

STANDARD 6

LIGHT DUTY TRANSMISSION LINE STEEL POLE STRUCTURES

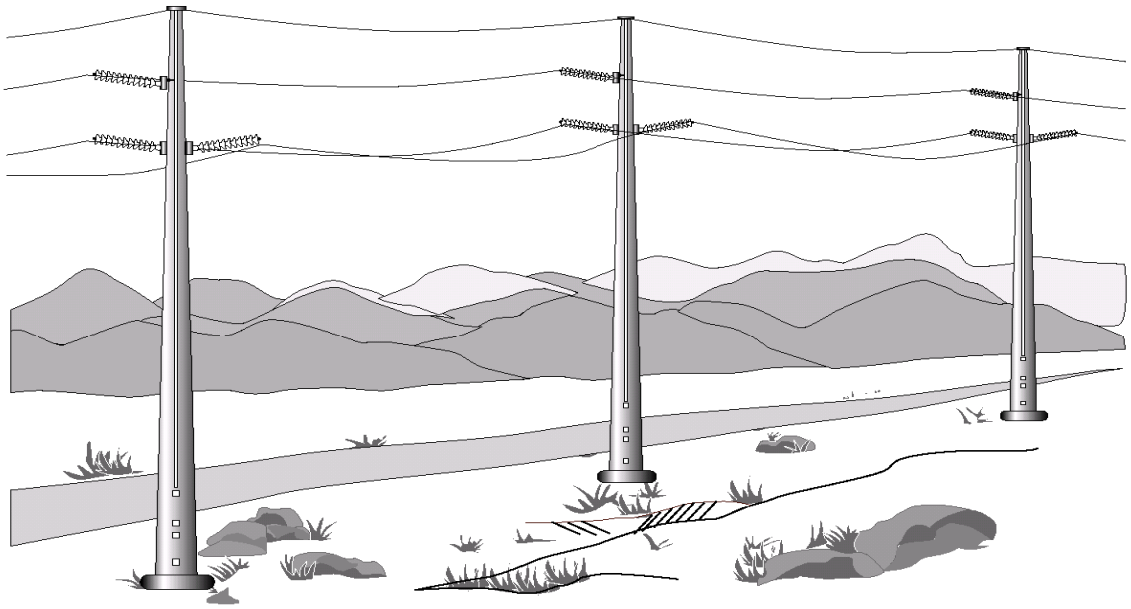

July 2009

SAFETY
A HABIT TO LIVE BY

STANDARD 6 - LIGHT DUTY TRANSMISSION LINE STEEL POLE STRUCTURES

TABLE OF CONTENTS

Page Number

SECTION 6.1 LIGHT DUTY STEEL POLE STRUCTURES 4

6.1.1 CONTRACTOR-FURNISHED DATA AND DRAWINGS 4
1. General 4
2. Design Data 4
3. Mill Test Reports 4
4. Welding Submittals 4
5. Dulling Treatment Submittals 5
6. Painting Submittals 5
7. Approval Drawings 5
8. Final Drawings 6
9. Submittal Requirements 6

6.1.2 DESIGN REQUIREMENTS 6
1. General 6
2. Design Guides 6
3. Specific Requirements 7
4. Embedment Design for Direct-Embedded Structures 8

6.1.3 GROUNDING REQUIREMENTS 8
1. General 8
2. Galvanized, Dulled Galvanized, and Metallized Structures 9
3. Weathering-Steel Structures 9
4. Painted-Over-Galvanized Structures 9

6.1.4 MATERIAL 9
1. Pole Shafts, Davit Arms, and Crossarms 9
2. Connection Plates 10
3. X-Braces and Miscellaneous Structural Steel 10
4. Connection Bolts, Nuts, Locknuts, and Lockwashers 10
5. Ground Plates and Bearing Plates 11
6. U-Bolts and Chain Links 11
7. Arc-Welding Electrodes 11
8. Paint System 11
9. Polyurethane Coating 11
10. Guys 11
11. Guy Hardware 11
12. Steel Guy Anchors and Rods 11
13. Concrete Guy Anchors 11
14. Removable Climbing Rung Sections 11
15. Clips For Removable Climbing Rung Sections 12
16. Removable Steps and Attachments 12
17. Structure Identification Plates 12

6.1.5 QUALITY CONTROL 12
1. General 12
2. Workmanship and Defective Material 12
3. Inspection and Tests 12
4. Dimensional Tolerances 12

6.1.6 FABRICATION 13
1. General 13
2. Straightening Material 13
3. Shearing and Cutting 13
4. Holes 13
5. Edge Distances and Bolt Spacing 14
6. Pole Shaft-To-Flange Plate Connections 14
7. Crossarm- and Davit Arm-To-Arm Bracket Connections 14
8. Cold Forming 14
9. Welding 14

6.1.7 NONDESTRUCTIVE, METALLOGRAPHIC, AND MACROETCH WELD TESTS 14
1. General 14
2. Visual Inspection 14
3. Ultrasonic and Radiographic Tests for Complete Penetration Welds 14
4. Ultrasonic, Metallographic, and Macroetch Tests for Partial Penetration Welds 15
5. Magnetic Particle and Dye Penetrant Tests 15

6.1.8 MARKING 15
1. Structure Components 15
2. Structure Identification Plate 16

6.1.9 GALVANIZING 16
1. Cleaning 16
2. Plate and Shape Galvanizing 16
3. Hardware Galvanizing 16
4. Straightening After Galvanizing 16
5. Galvanizing Repair 16

6.1.10 DULLED GALVANIZING 16
1. Dulling Treatment 16
2. Reflectance 16

6.1.11 METALLIZING 17
1. General 17
2. Surface Preparation 17
3. Direct-Embedded Structures With Concrete Backfill 17
4. Weathering-Steel Direct-Embedded Structures With Native Backfill 17

6.1.12 WEATHERING-STEEL FINISH 17
1. Direct-Embedded Structures with Concrete Backfill 17
2. Direct-Embedded Structures with Native Backfill 17

6.1.13 PAINTING 17
1. General 17
2. Surface Preparation and Application 17
3. Surfaces Not To Be Painted 18

6.1.14 POLYURETHANE COATING 18
1. General 18
2. Direct-Embedded Structures with Concrete Backfill 18
3. Direct-Embedded Structures with Native Backfill 18

6.1.15 HANDLING AND TRANSPORTING 18

6.1.16 INSTALLATION 19
1. General 19
2. Direct-Embedded Structures 19
3. Guys and Anchors 20
4. Climbing Provisions 20
5. Structure Orientation 20
6. Field Welding 20
7. Direct-Embedded H-Frame Structures 20
8. Temporary Guying Requirements 21
9. Vibration Control 21
10. Installation Tolerances 21

SECTION 6.1 LIGHT DUTY STEEL POLE STRUCTURES

6.1.1 CONTRACTOR-FURNISHED DATA AND DRAWINGS:

1. GENERAL: Use United States standard units of measurement and English words, signs, and symbols. Submit data and drawings for all structures. Include design calculations for all structure components. Drawings shall be new originals. Reproducibles of the specification drawings are not acceptable.

   Thoroughly check data and drawings for accuracy and completeness before submittal. Western will not check details and intermediate dimensions.

   Submit data and drawings as they are completed and checked for one or several structures rather than delaying to include drawings for the complete specifications requirements in one submittal.

   Western will return one set of the design data sheets, which require changes and one print of each drawing, marked to indicate approved or not approved and any required changes. Contractor shall change the designs and details which Western determines necessary to make the finished structures conform to these specifications.

   Western's review time is specified in the project specifications in the "Commencement, Prosecution, and Completion of Work" paragraph of Division 1, “General Requirements”. Western approval shall not relieve the Contractor from meeting the specification requirements nor the responsibility for design and drawing correctness. Fabrication prior to design data and drawing approval will be at the Contractor's risk.

2. DESIGN DATA: Prior to fabrication, submit for approval, the following design data for each type and height of structure:

   (1) General dimensions and weight.

   (2) Ultimate moment capacities at groundline, splices, joints, points where plate size changes, and other critical points.

3. MILL TEST REPORTS: Prior to material shipment, and as soon as practicable after contract award, submit certified copies of test reports of structural steel, bolts, nuts, and the chemical analyses and coating test of the galvanizing.

   Certified mill test reports for steel shapes and plates shall show customer's order, mill order, and Western specifications number. Mill certification shall show the weights of steel furnished for each size and heat number represented by the tests. No material shall be shipped until Western has received certified mill test reports.

4. WELDING SUBMITTALS:

   (1) Prior to fabrication, submit all weld procedures which are not prequalified in accordance with AWS D1.1, “Structural Welding Code”.

   (2) Prior to fabrication submit a test and evaluation procedure describing the method to be used to verify penetration of partial penetration welds.

   (3) Submit nondestructive, metallographic, and macroetch test reports, including ultrasonic test pieces and metallographic and macroetch weld samples, within 20 working days after tests are performed.

5. DULLING TREATMENT SUBMITTALS:

   (1) Chemical composition of dulling treatment.

   (2) Application procedure.

   (3) Two sets of three samples each, representing the reflectance specified in the project specifications. Each sample shall be a dulled-galvanized steel panel, 3 inches x 6 inches x 1/4-inch thick, and have the respective percent of reflectance stamped into the metal.

   (4) Approved samples shall constitute comparison standards for dulled-galvanized steel inspection.

6. PAINTING SUBMITTALS:

   (1) Paints: Manufacturer's technical information including color chips, paint label analysis, surface preparation, spread rates, thinning instructions, coverage of paint, recommended number of coats, and application instructions.

   (2) Material safety data sheets (MSDS) for each paint, oil, epoxy, and other hazardous material.

7. APPROVAL DRAWINGS: Prior to fabrication, submit for approval, drawings and/or catalog data sheets covering each type and height of structure showing the following:

   (1) Dimensions.

   (2) For Each Structure Component: Mark number, position, size, material, and location.

   (3) For Each Bolted Connection: Quantity, type (grade), and size of bolts.

   (4) A complete bill of materials, including hardware and weights, listing all material for one structure or the portion shown thereon. Show the number of pieces required and description of each piece, including size and length. Total weight of one complete structure shall be noted. Calculate weights in accordance with LRFD, “AISC Code of Standard Practice for Steel Buildings and Bridges", except that weights for nonrectangular plates and shapes are to be based on actual detailed dimensions shown on the final shop drawings.

   (5) Weight, center of gravity, and lifting point of each major structure component and of complete structure.

   (6) Embedment depth for direct-embedded structures.

   (7) Location, edge preparation details, and material for each field weld.

   (8) Method for permanently restraining slip-joints after installation for H-frame structures.

   (9) Structure number sign and identification plate locations.

   (10) Plan and elevation views for each structure type showing exact location of clips for removable climbing rung sections and attachments for removable steps.

   (11) All structure components and connections.

   (12) Ground plate locations in accordance with drawing 41 1015.

(13) Mounting nut locations for structure signs in accordance with drawing 41 9027, or as specified in the project specifications.

(14) Details of removable climbing rung sections, rungs, clips for removable climbing rung sections, removable steps and attachments, and attaching welds.

(15) Western specifications number and project title.

(16) Specific Western structure type(s) shown or referenced on each drawing.

(17) Type and grade of material (ASTM specification) and structure finish, i.e., galvanized, dulled galvanized, metallized, weathering-steel, or painted-over-galvanized.

8. FINAL DRAWINGS: Prior to material shipment and before final payment, furnish as-built drawings and bill of materials required in paragraph 7 above.

9. SUBMITTAL REQUIREMENTS: Submit data and drawings for approval as follows:

(1) Design Data: Forward one set to the Civil Engineer. Send a copy of the transmittal letter to the COR.

(2) Mill Test Reports: Forward one copy of each report to the Civil Engineer.

(3) Welding Submittals: Forward one set to the Civil Engineer.

(4) Dulling Treatment Submittals: Forward one set to the Civil Engineer and one set to the COR.

(5) Painting Submittals: Forward one copy to the Civil Engineer and two copies to the COR.

(6) Approval Drawings: Forward two sets of prints to the Civil Engineer, and send a copy of the transmittal letter to the COR.

(7) Final Drawings:

1) Forward two sets of prints to the COR.
2) Forward one set of prints and a copy of the transmittal letter to the Civil Engineer.

6.1.2 DESIGN REQUIREMENTS:

1. GENERAL: Design using published theories accepted by industry as good engineering practice. Design so that ultimate stresses do not exceed the material yield stress. Design yield strength for structural steel plates shall not exceed 65 ksi. The wood pole class equivalent light duty steel pole shall have a moment capacity at any cross section that is equal to or greater than the equivalent class wood pole.

2. DESIGN GUIDES:

(1) ASCE Manual 72, "Design of Steel Transmission Pole Structures".
(2) AISC "Manual of Steel Construction - Load and Resistance Factor Design" (LRFD).
(3) AWS D1.1, "Structural Welding Code".
(4) National Electric Safety Code (NESC).

3. SPECIFIC REQUIREMENTS:

(1) Light Duty Steel Pole Structures:

1) Pole shafts shall be closed shapes and tapered consistent with strength requirements.

2) Crossarms for H-frame structures shall be square or rectangular structural tubing.

3) Davit arms shall be closed shapes and shall provide the electrical clearances shown on the drawings.

4) Brackets and braces may be open or closed shapes and shall provide the electrical clearances shown on the drawings.

5) Galvanized, dulled galvanized, metalllized, and painted-over-galvanized steel shall not be less than 5/32-inch thick, except for structure identification plates.

6) Weathering steel shall not be less than 3/16-inch thick, except for structure identification plates.

7) Thickness of flange plates shall be designed assuming loads are transferred directly by point loads through bolts, and not by bearing between the flange plates.

8) Sections joined by slip joints shall have a minimum lap of 1.5 times the largest inside diameter of the female section. Use complete penetration welds in the female splice area. Shims shall not be used in slip joints. Slip joints on H-frame structures shall be permanently restrained from movement after installation.

9) Galvanized, dulled galvanized, and painted-over-galvanized structures shall be capped at the top.

10) Bottom pole shaft sections of weathering-steel and metallized structures shall be hermetically sealed.

11) Galvanized tubular members shall have vent holes at both ends to allow air circulation after installation. Direct-embedded galvanized pole shafts shall have vent holes 2 feet above groundline.

12) Direct-embedded weathering-steel pole shafts shall be metallized in accordance with Section 6.1.11, “Metallizing”.

13) Direct-embedded pole shafts shall be coated with polyurethane coating in accordance with Section 6.1.14, “Polyurethane Coating”.

14) Structure sections and complete structures shall have approved method to prevent slippage of slings and ensure safe lifting and handling.

15) Structure number signs shall not interfere with installation of removable climbing rung sections or removable steps.

16) Location and spacing of holes shall be within tolerances specified in Section 6.1.5, "Quality Control".

17) Contractor shall determine details not shown on the drawings based on the intended use and fabricator's recommendations.

(2) Guys and Anchors:

1) Guy size and arrangement shall be as specified in the project specifications.

2) Guy hardware and structure attachments shall be capable of supporting the minimum rated breaking strength of attached guys. Steel hardware shall be galvanized or galvanized and dulled in accordance with Sections 6.1.9, "Galvanizing" and 6.1.10, “Dulled Galvanizing”.

3) Guys and guy vangs shall not interfere with installation of removable climbing rung sections or removable steps.

4) Determine number and type of guy anchors. Guy anchors shall develop the minimum rated breaking strength of attached guys. No more than two guys shall be attached to any one anchor.

(3) Climbing Provisions:

1) Climbing provisions, if required in the project specifications, shall consist of either removable steps and attachments or removable climbing rung sections.

2) Dimensions and details for climbing provisions shall be as shown on drawings in the project specifications.

3) Welds to attach climbing provisions to structures shall develop the ultimate tensile strength of the attached part.

4) Rungs for removable climbing rung sections shall be secured either by welding or with nuts and locknuts.

5) Removable climbing rung sections shall be identical.

4. EMBEDMENT DESIGN FOR DIRECT-EMBEDDED STRUCTURES:

(1) Auger Diameter:

1) Direct-Embedded Structures with Native Backfill: Auger diameter shall be large enough to provide space for use of tamping tools all around the poles to the full depth of the holes.

2) Direct-Embedded Structures with Concrete Backfill: Auger diameter shall be pole shaft base diameter plus a minimum of 12 inches, unless otherwise specified in the project specifications.

(2) Design Embedment Depth: Structure design embedment depth shall be 10 percent of the total pole length plus 2 feet, unless otherwise listed in the project specifications.

6.1.3 GROUNDING REQUIREMENTS:

1. GENERAL: All connections on all structures shall provide for electrical continuity across the connections, and an electrical path shall be provided from every part of the structure to the ground. Grounding requirements will vary with the type of material and structure finish and shall be in accordance with drawing 41 1015 and this section.

2. GALVANIZED, DULLED GALVANIZED, AND METALLIZED STRUCTURES:

   (1) Pigtail jumpers and ground plates are not required on galvanized, dulled galvanized, or metallized structures.

3. WEATHERING-STEEL STRUCTURES:

   (1) Pigtail jumpers and welded ground plates are required on both sides of all slip joints and bolted connections, including flange joints, davit arm and crossarm connections, and on the pole shafts or arm shafts adjacent to post insulator connections.

   (2) Weathering-Steel Structures with Native Backfill: ½-inch-thich stainless steel welded hermetically-sealed bearing plates are required for all poles.

   (3) Weathering-Steel Structures with Concrete Foundations: Pigtail jumpers and welded ground plates are required 2 feet above base plates on all pole shafts.

4. PAINTED-OVER-GALVANIZED STRUCTURES:

   Pigtail jumpers and ground plates are not required on painted-over-galvanized structures provided the following surfaces of the structures are not painted; i.e., masked, or otherwise protected from paint, to ensure the electrical continuity of the structure:

   (1) Faying surfaces shall not be painted, including:

      1) Areas inside slip joints: Outside surface of male (bottom) section and inside surface of female (top) section).

      2) Arm connections: Outside surface of arm connection vangs on pole shaft and inside surface of arm brackets on arms.

      3) Post insulator mounting brackets: Exterior face of mounting brackets.

   (2) Overhead ground wire attachment plates shall not be painted.

   (3) Embedded portions of galvanized pole shafts shall not be painted.

   (4) If any of the above surfaces are painted, the paint shall be removed prior to structure installation.

6.1.4 MATERIAL:

1. POLE SHAFTS, DAVIT ARMS, AND CROSSARMS:

   (1) Galvanized, Dulled Galvanized, Metallized, or Painted Steel: ASTM A 572 or ASTM A 871.

      1) Material shall have a minimum longitudinal impact strength of 15 foot-pounds at minus 20°F as determined by the Charpy "V" Notch Impact test in accordance with ASTM A 673.

      2) Silicon content of pole shaft material shall be either below 0.06 percent or between 0.15 and 0.35 percent.

      3) Galvanize, galvanize and dull, metallize, or paint material after fabrication in accordance with Sections 6.1.9, "Galvanizing", 6.1.10, “Dulled Galvanizing”, 6.1.12, "Metallizing", or 6.1.13, "Painting".

4) Structural steel, other than ASTM A 572 or ASTM A 871, shall be approved by the Civil Engineer and shall meet or exceed all chemical and physical requirements for ASTM A 572 and all applicable requirements of ASTM A 6, including minimum and maximum tensile strength, yield point, elongation, bend test requirements, and Charpy V-Notch Impact requirements.

(2) Weathering Steel: ASTM A 871.

(3) Structural Tubing:

1) Galvanized, Dulled Galvanized, Metallized, or Painted steel: ASTM A 500, Grade B.
2) Weathering Steel: ASTM A 847.

2. CONNECTION PLATES:

(1) Galvanized, Dulled Galvanized, Metallized, or Painted Steel: ASTM A 572, ASTM A 588, ASTM A 633, or ASTM A 871.

(2) Weathering Steel: ASTM A 588 or ASTM A 871.

3. X-BRACES AND MISCELLANEOUS STRUCTURAL STEEL:

(1) Galvanized, Dulled Galvanized, Metallized, or Painted steel: ASTM A 36, ASTM A 242, ASTM A 572, ASTM A 588, ASTM A 633, or ASTM A 871.

(2) Weathering steel: ASTM A 242, ASTM A 588, or ASTM A 871.

4. CONNECTION BOLTS, NUTS, LOCKNUTS, AND LOCKWASHERS:

(1) Galvanized, Dulled Galvanized, or Painted Steel:

1) Bolts: ASTM A 325, ASTM A 354, Grade BC, or ASTM A 394, Type 1.

2) Locknuts: Palnuts (regular), Type MF No. 1 (regular or square).

3) Lockwashers: ASTM F 436.

4) Galvanize or galvanize and dull material after fabrication in accordance with Sections 6.1.9, “Galvanizing” and 6.1.10, “Dulled Galvanizing”. Material for painted structures shall be galvanized, then painted in accordance with Section 6.1.13, "Painting", except lockwashers do not require painting.

(2) Weathering Steel:

1) Bolts: ASTM A 325, Type 3, or ASTM A 394, Type 3.

2) Locknuts: Palnuts (regular), Type MF No. 1 (regular or square). Locknuts shall be galvanized in accordance with Section 6.1.9, "Galvanizing", then prime-coated to match weathering-steel finish.

3) Lockwashers: ASTM F 436. Lockwashers shall be galvanized in accordance with Section 6.1.10, "Galvanizing".

5. GROUND PLATES AND BEARING PLATES:

   (1) Galvanized, Dulled Galvanized, Metallized, or Painted-Over-Galvanized Structures: ASTM A 36, ASTM A 572, or ASTM A 633, galvanized, metallized, or stainless steel conforming to an applicable ASTM standard suitable for the intended use. Stainless steel threaded inserts welded to the pole shafts may be substituted for the ground plates shown on drawing 41 1015.

   (2) Weathering-Steel Structures: Stainless steel conforming to an applicable ASTM standard suitable for the intended use.

6. U-BOLTS AND CHAIN LINKS: ASTM A 36, galvanized.

7. ARC-WELDING ELECTRODES: Arc-welding electrodes shall be in accordance with AWS D1.1.

8. PAINT SYSTEM: Paint system shall be chemical, corrosion, and abrasion resistant and shall produce the color and finish specified in the project specifications. All paint system components shall be from the same manufacturer. Paint system shall be approved by the COR.

9. POLYURETHANE COATING: Corrocote II Plus as manufactured by Madison Chemical Industries, Inc., 490 McGeachie Drive, Milton, Ontario, Canada L9T 3Y5.

10. GUYS: ASTM A 475, Class B, or A 586, Class B, galvanized.

11. GUY HARDWARE: Hardware shall be galvanized and of the type and manufacturer's rated strength as shown on the Contractor-furnished data and drawings. Hardware shall conform to an applicable ASTM standard suitable for the intended use.

12. STEEL GUY ANCHORS AND RODS: Anchors and rods shall be galvanized and of the type and manufacturer's rated strength as shown on the Contractor-furnished data and drawings. Rods for disk and plate-type anchors shall be coated with an approved corrosion-preventive, nonconductive material.

13. CONCRETE GUY ANCHORS: Concrete requirements shall be in accordance with Construction Standard 3 - Concrete.

14. REMOVABLE CLIMBING RUNG SECTIONS:

   (1) Structural Tubing:

      1) Galvanized, Dulled Galvanized, Metallized, or Painted Steel: ASTM A 500.
      2) Weathering Steel: ASTM A 242, ASTM A 588, or ASTM A 847.

   (2) Rungs:

      1) Galvanized, Dulled Galvanized, Metallized, or Painted Steel Structures: ASTM A 325 or ASTM A 394, Type 1. Galvanize, galvanize and dull, or metallize rungs after fabrication in accordance with Sections 6.1.9, “Galvanizing”, 6.1.10, “Dulled Galvanizing”, or 6.1.11, “Metallizing”. Rungs for painted structures shall be galvanized or metallized, but shall not be painted to protect the knurling.

      2) Weathering Steel: ASTM A 325, Type 3 or ASTM A 394, Type 3.

      3) Rungs shall be corrugated, knurled, dimpled, or otherwise treated to minimize slipping. Coating with skid-resistant material is not acceptable. Acceptable rungs are knurled rungs as manufactured by BBC Fasteners, Inc., 4210 Shirley Lane, Alsip, IL 60658.

15. CLIPS FOR REMOVABLE CLIMBING RUNG SECTIONS:

    (1) Galvanized, Dulled Galvanized, Metallized, or Painted steel: ASTM A 36.
    (2) Weathering steel: ASTM A 242, ASTM A 588, or ASTM A 871.

16. REMOVABLE STEPS AND ATTACHMENTS:

    (1) Contractor proposed and Western approved removable step climbing system, with attachments for removable steps alternating at 1 foot as shown on drawing 43 2211.

17. STRUCTURE IDENTIFICATION PLATES:

    (1) Galvanized, Dulled Galvanized, Metallized, or Painted Steel: ASTM A 36.
    (2) Weathering Steel: ASTM A 242, ASTM A 588, or ASTM A 871.
    (3) Minimum plate thickness shall be 1/8 inch.

6.1.5 QUALITY CONTROL:

1. GENERAL: Contractor shall have defined quality control methods and functions available for review and approval. Maintain permanent records on mill test reports, weld procedures, welding operators, qualifications for welders and tack welders, inspector test results, and visual and nondestructive test records.

   Structure components and welds shall be inspected to determine conformance to contract requirements, drawings, codes and standards, and procedures, including dimensional compliance, quality of welds, weld contour, weld size, and overall workmanship.

2. WORKMANSHIP AND DEFECTIVE MATERIAL: Work shall be equal to best modern practice in the manufacture and fabrication of material. Design details, fabrication, and erection not covered by the drawings or these specifications shall conform to LRFD and ASCE Manual 72, "Design of Steel Transmission Pole Structures". Contractor shall be responsible for correct fitting of parts and shall replace defective material discovered during erection.

3. INSPECTION AND TESTS: Inspection of material will be made in accordance with Construction Standard 1 - General Requirements, Section 1.2.3, "Material Inspection". Western inspection of material at the mill will be waived.

4. DIMENSIONAL TOLERANCES: Allowable variations from specified dimensions are as follows:

   (1) Overall Length of Structure: Minus 12 and plus 24 inches.

   (2) Length of Component Pole Shaft Sections: Plus or minus 3 inches.

   (3) Structure Cross Section:

      1) Diameters 36 Inches or Less: Minus 1/8 and plus 1/4 inch.
      2) Diameters Greater Than 36 Inches: Minus 1/4 and plus 1/2 inch.
      3) Circumference of All Sections: Minus 0 inch.

   (4) Vertical Spacing Between Conductor Attachment Points and Ground Wire Attachment Points: Plus or minus 1 inch.

   (5) Straightness of Structure: 8-inch in 10 feet of length.

   (6) Location of Drilled Holes: Plus or minus 1/16 inch.

(7) Hole Spacing on Same Connection: Plus or minus 1/16 inch (nonaccumulative).

(8) Maximum Difference Between Interior Width of Arm Brackets and Exterior Width of Arm Mounting Boxes or Vangs: 1/2 inch.

(9) Maximum Gap Between Mating Flange Plates Before Installing Bolts: 1/2 inch.

(10) Length of Davit Arm or Crossarm: Plus or minus 1 inch.

(11) Length of Overlap of Slip Joint: Minus 6 and plus 12 inches.

(12) Variance in Longitudinal Location of Conductor Attachment at End of Davit Arm or Crossarm: Plus or minus 2 inches per 10 feet of arm length from theoretical location.

(13) Structure Identification Plate Location: 6 feet, plus or minus 1 foot, above groundline.

(14) Vertical Location of Guy Attachment Points with Respect to Conductor and Ground Wire Attachment Points: Plus or minus 1 inch.

(15) Clear Dimensions: Minus 0 and plus 1/2 inch.

(16) Dimensions for Clips for Removable Climbing Rung Sections: Plus or minus 1/16 inch.

(17) Dimensions for Removable Climbing Rung Sections: Plus or minus 1/4 inch.

(18) Vertical Spacing of Rungs for Removable Climbing Rung Sections and Attachments for Removable Steps: 12 inches plus or minus 1/2 inch.

Tolerances not listed above shall be in accordance with applicable codes and standards.

6.1.6 FABRICATION:

1. GENERAL: Plates shall be edge-planed or flame-cut with mechanically guided torches.

2. STRAIGHTENING MATERIAL: Before being laid out or worked in any manner, structural material shall be straight, free from sharp kinks and bends, and clean of rust and dirt. Straightening operations shall not damage metal.

3. SHEARING AND CUTTING: Shearing and cutting shall be neatly finished on material exposed to view. Copes and re-entrant cuts shall be filleted before cutting.

4. HOLES:

   (1) General: Holes in steel less than 13/16-inch thick may be punched to full size unless otherwise shown on the drawings. Holes shown on the drawings as drilled holes and holes in steel 13/16-inch thick or greater shall be drilled or subpunched and reamed. Holes shall be clean-cut and without torn or ragged edges. Burrs resulting from reaming or drilling shall be removed with a tool making a 1/16-inch chamfer. Holes shall be cylindrical and perpendicular to the member. Holes within 4 inches of bend lines shall be made after bending.

   (2) Punching: For hole punching to full size, the punch diameter shall be the nominal hole diameter, and the die diameter shall not be more than 1/16-inch larger than the punch diameter. For subpunching, the punch diameter shall be 1/4-inch smaller than the nominal hole diameter, and the die diameter shall not be more than 3/32-inch larger than the punch

diameter. Subpunched and reamed holes shall not have a punched surface in the hole periphery.

(3) Reaming and Drilling: Finished hole diameter for reamed or drilled holes shall be as shown on the drawings.

5. EDGE DISTANCES AND BOLT SPACING: Edge distances and bolt spacing shall be in accordance with LRFD unless otherwise shown on the drawings.

6. POLE SHAFT-TO-FLANGE PLATE CONNECTIONS: Welds to attach pole shafts to base plates and flange plates shall be complete penetration with backing bars.

7. CROSSARM- AND DAVIT ARM-TO-ARM BRACKET CONNECTIONS: Welds to attach crossarms and davit arms to arm brackets and flange plates shall be complete penetration with backing bars.

8. COLD FORMING: Contractor shall have documented, detailed procedures describing cold forming methods to produce bends without cracking. Cracking or opening of surface laminations shall be investigated and repaired. Repairs shall be inspected and recorded. Plates with cracks, laminations, or lamellar tears shall be rejected. Minimum inside radii of bends shall be equal to or greater than specified by LRFD.

9. WELDING:

(1) General: Welding shall be performed in accordance with AWS D1.1 and/or AWS C1.1, “Recommended Practices for Resistance Welding”. Use a shielded arc or resistance welding process. Welds shall be as shown on the shop drawings and made so that residual shrinkage stresses will be a minimum. If not previously qualified, the weld procedure, welders, welding operators, and tack welders shall be qualified in accordance with AWS D1.1.

(2) Longitudinal partial penetration seam welds shall be performed with an automatic submerged arc or resistance welding process and shall have 80-percent-minimum penetration through the material thickness, except welds within 6 inches of base plates, flange plates, and arm brackets shall be complete penetration. The root opening for longitudinal seam welds shall be considered zero, with a variance of 1/16 inch allowed for dimensional tolerance. Backing material is not permitted for longitudinal seam welds.

(3) A written weld procedure for longitudinal partial penetration seam welds shall be submitted and approved prior to fabrication.

6.1.7 NONDESTRUCTIVE, METALLOGRAPHIC, AND MACROETCH WELD TESTS:

1. GENERAL: Inspect welds and perform tests in the presence of a Western inspector and in accordance with AWS D1.1 and AWS C1.1, or procedures approved by the Civil Engineer. Repair and reexamine defective welds in accordance with AWS D1.1. Notify the Civil Engineer a minimum of 7 working days prior to beginning weld tests.

2. VISUAL INSPECTION: In addition to the tests required below, visually inspect welds in accordance with AWS D1.1.

3. ULTRASONIC AND RADIOGRAPHIC TESTS FOR COMPLETE PENETRATION WELDS: Perform ultrasonic or radiographic tests on the entire length of each complete joint penetration shop and field weld in accordance with AWS D1.1. Perform tests after galvanizing for complete joint penetration welds used at T-joints, as defined by AWS D1.1, where the thicker plate is more

than three times the thickness of the thinner plate. Otherwise, tests can be performed before galvanizing.

4. ULTRASONIC, METALLOGRAPHIC, AND MACROETCH TESTS FOR PARTIAL PENETRATION WELDS: Perform either ultrasonic or metallographic tests for partial penetration welds.

   (1) Ultrasonic Tests: Perform ultrasonic tests in accordance with AWS D1.1 or procedures approved by Western. Prepare a test piece with the same weld joint configuration and 80-percent weld penetration for each thickness of material to be tested. Verify the weld procedure and test procedure with actual weld penetration of test pieces. Spot test a minimum of 10 percent of each length of partial penetration weld at random intervals, with no test length exceeding 12 inches.

   (2) Metallographic Tests: Perform metallographic tests using a test lab approved by Western. For each tubular piece mark number, remove a weld sample from the first tubular section and from every tenth section thereafter. Remove samples by core drilling, and plug the holes with complete penetration welds without permanent backing material.

   (3) Macroetch Test for Resistance Welding: Perform macroetch tests method in accordance with AWS C1.1 or procedure approved by Western. An actual section of the production joint or complete assembly shall be welded and tested at the start of production and every fiftieth pole section thereafter. However, each time a change is made in the materials or thickness being welded, at least 3 welds per head shall be tested to assure soundness of welds and 80-percent-minimum penetration through the material thickness for all longitudinal partial penetration seam welds.

   (4) Test reports shall include the following:

      1) Western contract number and project title.

      2) Structure type and piece mark number.

      3) Material type and thickness.

      4) For metallographic and macroetch tests, a sketch showing location where weld sample was removed.

      5) Results of weld test including weld penetration

5. MAGNETIC PARTICLE AND DYE PENETRANT TESTS: The COR may require magnetic particle or dye penetrant weld tests where cracking is suspected. Perform magnetic particle tests in accordance with ASTM E 709. Perform dye penetrant tests in accordance with ASTM E 165. Acceptance standards for the tests shall be in accordance with AWS D1.1.

6.1.8 MARKING:

1. STRUCTURE COMPONENTS: Mark structure components with the designations shown on final erection drawings. Stamp or weld markings into the steel before painting, galvanizing, or metallizing. The markings shall be 1/2-inch-minimum height and clearly legible after painting, galvanizing, or metallizing. Mating pole shaft sections shall be match marked to ensure correct orientation and camber.

2. STRUCTURE IDENTIFICATION PLATE: Identify each structure with an identification plate located approximately 6 feet above groundline.

   (1) Stamp the following information into the plates using numerals and letters not less than 1/4-inch high:

      1) Manufacturer's name.
      2) Month and year of fabrication.
      3) Structure designation.
      4) Complete structure weight in pounds.
      5) Ultimate groundline moment capacity in kip-feet.

   (2) Plates shall be welded all-around to the pole shafts before galvanizing, metallizing, or painting. The numerals and letters shall be clearly legible after galvanizing, metallizing, or painting.

6.1.9 GALVANIZING:

1. CLEANING: After shopwork completion, clean material of rust, loose scale, dirt, oil, grease, and other foreign substances. Clean all slag from welded areas.

2. PLATE AND SHAPE GALVANIZING: After fabrication and cleaning, galvanize plates and shapes in accordance with ASTM A 123. Double dipping or progressive dipping of closed-member shapes shall not be permitted. After galvanizing, pole shaft sections shall not have lateral variations greater than 1/1000 the axial length of the section. Holes shall be free of excess spelter after galvanizing.

3. HARDWARE GALVANIZING: Galvanize bolts, nuts, washers, locknuts, and lockwashers in accordance with ASTM A 153. Remove excess spelter by centrifugal spinning.

4. STRAIGHTENING AFTER GALVANIZING: Plates and shapes which have been warped by the galvanizing process shall be straightened by rerolling or pressing. Material shall not be hammered or straightened in a manner that will damage the galvanizing. Material that has been harmfully bent or warped, in the opinion of the COR, shall be rejected.

5. GALVANIZING REPAIR: Material with damaged galvanizing shall be redipped unless the damage is local and can be repaired. If the galvanized coating becomes damaged after being dipped twice, the material shall be rejected. Where repair is authorized, the damaged area shall be repaired in accordance with ASTM A 780, except the minimum coating thickness shall be 3 mils.

6.1.10 DULLED GALVANIZING:

1. DULLING TREATMENT: Exposed surfaces of galvanized steel structures, including connection and anchor bolts, nuts, washers, locknuts, lockwashers, and visible portions of embedded material shall be given an approved dulling treatment to provide a gray or blackish-gray coloration. Treatment shall dull the shine and reflectance of surfaces and provide a uniform appearance for all treated surfaces. Soft or water-soluble surface deposits resulting from the treatment shall be removed by rinsing. Treatment shall have a life of at least 1-year and not be detrimental to the service life of the protective zinc coating. Dulled surfaces shall be free of white rust (zinc oxide).

2. REFLECTANCE: Finished steel shall maintain a reflectance no greater than that specified in the project specifications, plus or minus 3 percent. Reflectance shall be measured utilizing any reflectometer calibrated against "Neutral Matte Finish" color standards obtainable from Munsell Color, GretagMacbeth, 617 Little Britain Road, New Windsor, NY 12553-6148. The reflectometer shall have a margin of error no greater than plus or minus 3 percent.

6.1.11 METALLIZING:

1. GENERAL: Metallizing shall be in accordance with AWS C2.2, "Recommended Practice for Metallizing with Aluminum and Zinc for Protection of Iron and Steel". Structures shall be metallized with zinc and have a minimum coating thickness of 6 mils. Zinc shall have a minimum purity of 99.9 percent.

2. SURFACE PREPARATION: After fabrication, blast clean steel in accordance with Steel Structures Painting Council Surface Preparation Specification SSPC-SP 5, "White Metal Blast Cleaning".

3. DIRECT-EMBEDDED STRUCTURES WITH CONCRETE BACKFILL: If any portion of a pole shaft above groundline is metallized, the entire structure shall be metallized.

4. WEATHERING-STEEL DIRECT-EMBEDDED STRUCTURES WITH NATIVE BACKFILL: Metallize pole shafts from bottom of poles to 2 feet above groundline prior to polyurethane coating.

6.1.12 WEATHERING-STEEL FINISH:

After fabrication, blast clean steel in accordance with Steel Structures Painting Council Surface Preparation Specifications as follows:

1. DIRECT-EMBEDDED STRUCTURES WITH CONCRETE BACKFILL:

   (1) Top of Structure to 2 Feet Above Bottom of Structure: SSPC-SP 7, “Brush-Off Blast Cleaning”.

   (2) Bottom 2 Feet of Structure: SSPC-SP 6, "Commercial Blast Cleaning".

2. DIRECT-EMBEDDED STRUCTURES WITH NATIVE BACKFILL:

   (1) Top of Structure to 2 Feet Above Groundline: SSPC-SP 7, “Brush-Off Blast Cleaning”.

   (2) Two Feet Above Groundline to Bottom of Structure: SSPC-SP 5, "White Metal Blast Cleaning".

6.1.13 PAINTING:

1. GENERAL: Provide material and equipment, clean surfaces, and apply paint to all structure components, except as noted below, in accordance with the manufacturer’s instructions and this paragraph. Prevent dust or other contamination from falling on wet, newly painted surfaces, and do not move components until paint is thoroughly dry. Painted surfaces shall have uniform texture and color-matched appearance.

   Repair paint on steel pole structures which is damaged or removed due to ground plate installation, welding, transport to work sites, storage at the work sites, installation, or any other Contractor's operation. Reclean exposed surfaces and reapply paint as necessary to restore damaged and bare surfaces to the specified condition.

2. SURFACE PREPARATION AND APPLICATION: Surface preparation and application shall be in accordance with manufacturer’s recommendations.

3. SURFACES NOT TO BE PAINTED: The following areas and faying surfaces of the structures shall be masked or otherwise protected from paint to ensure the electrical continuity of the structures:

   (1) Areas inside slip joints: Outside surfaces of male (bottom) sections and inside surfaces of female (top) sections.

   (2) Arm connections: Outside surfaces of arm connection vangs and inside surfaces of arm brackets.

   (3) Post insulator mounting brackets: Exterior surfaces of mounting brackets.

   (4) Overhead ground wire attachment plates.

   (5) Portions of galvanized pole shafts that will be below groundline.

   (6) Removable steps and attachments.

   (7) Removable climbing rung sections and interior surfaces of clips for removable climbing rung sections.

   (8) Ground plates.

6.1.14 POLYURETHANE COATING:

1. GENERAL: Coating thickness and surface preparation shall be in accordance with manufacturer's recommendations. However, minimum coating thickness shall be 25 mils. Top edge of coating shall be feathered, in lieu of masked, to prevent flaking.

   Take precautions to prevent blistering of polyurethane coating. Damaged or blistered coating shall be repaired in accordance with manufacturer's recommendations prior to structure installation.

   Polyurethane coating shall not be applied to ground plates or bearing plates.

2. DIRECT-EMBEDDED STRUCTURES WITH CONCRETE BACKFILL:

   (1) Coat bottom 2 feet of direct-embedded weathering-steel pole shafts with polyurethane coating.

   (2) Polyurethane coating is not required for galvanized, dulled galvanized, metallized, or painted-over-galvanized structures.

3. DIRECT-EMBEDDED STRUCTURES WITH NATIVE BACKFILL:

   (1) Coat galvanized pole shafts from 2 feet above groundline to 6 inches above bottom of poles with polyurethane coating. Bottom 6 inches shall be left uncoated for electrical grounding.

   (2) Coat weathering-steel pole shafts from 2 feet above groundline to bottom of poles with polyurethane coating. Do not coat bearing plates.

6.1.15 HANDLING AND TRANSPORTING:

Handle and transport steel structures and components to avoid bending or damage. Bent pieces may be used only if they are straightened without damage to the material. Pieces bent beyond repair shall be replaced. Material with damaged galvanizing, metallizing, paint, or polyurethane coating shall be replaced or repaired in accordance with Sections 6.1.9, "Galvanizing", 6.1.13, "Painting", or 6.1.14,

"Polyurethane Coating". Provide wood blocking material so that unloaded materials will not be in direct contact with the ground and will remain stable (unable to roll).

6.1.16 INSTALLATION:

1. GENERAL:

   (1) Installation shall be in accordance with LRFD, “AISC Code of Standard Practice for Steel Buildings and Bridges”.

   (2) Use jacking devices for slip-joint assembly in accordance with fabricator's recommendations.

   (3) Lubricants other than soapy water shall not be used in slip-joint assembly.

   (4) Secure all slip joints by positive mechanical means before lifting or installing structures.

   (5) Provided dimensional tolerances listed in Sections 6.1.5.4(8) and 6.1.5.4(9) in the “Quality Control” paragraph are not exceeded, spaces in bolted connections greater than or equal to 1/8 inch shall be filled with galvanized washers or ring fills before installing bolts. Assembled connections shall be in accordance with the following:

      1) Arm brackets-to-arm boxes or vangs: Spaces shall be equal on both sides of the connections.

      2) Flange plate connections: Straightness of assembled structure shall be within 1/8 inch in 10 feet of length.

   (6) Lift structures by slings attached at lifting points as shown on approval drawings.

   (7) Raking of structures shall not be permitted unless approved by Western.

   (8) Concrete backfill shall cure a minimum of 14 days before stringing conductors and overhead ground wires.

   (9) Remove all corrosive and foreign material, including chalk and grease marks, from structures and internally threaded portions of ground plates, including material deposited on the structures prior to and during installation.

   (10) Correct installation errors and omissions, including retightening of nuts and retightening or retensioning of guys.

2. DIRECT-EMBEDDED STRUCTURES:

   (1) Structure embedment depth shall be 10 percent of the total pole length plus 2 feet, or as listed in the project specifications, unless rock is encountered.

   Rock is defined as a massive or stratified cemented formational material having a standard penetration test (SPT) "N" value of 100 or more throughout and below the entire embedment depth.

   If rock is encountered, structure embedment depths may be reduced to the overburden depth plus "Keyed Into Rock" depth listed in the project specifications.

   (2) If a structure embedment depth is reduced due to rock, cut off the bottom of the pole shaft a length equal to the reduction in embedment depth and reweld the bearing plate to the shaft.

Repair damaged galvanizing, metallizing, or polyurethane coating in accordance with Sections 6.1.9, "Galvanizing", or 6.1.14, “Polyurethane Coating”.

(3) Verify structure alignment prior to backfill placement to ensure correct orientation with respect to line angle.

(4) After setting and aligning structures which are to receive native backfill, place and compact backfill to a dry density not less than the natural in-place dry density of the surrounding earth. Backfill shall be banked and tamped around the poles to a height of 12 inches above the natural ground surface. Any surplus excavated material shall be leveled neatly. If satisfactory backfill material is not available from excavation or within the immediate vicinity of the structure, the Contractor shall import any backfill material required.

(5) After setting and aligning structures which are to receive concrete backfill, temporarily guy or hold structures to prevent displacement during concrete backfill placement and for a minimum of 3 days thereafter.

3. GUYS AND ANCHORS:

(1) Install guys and anchors in accordance with manufacturer's recommendations. Compact backfill for guy anchor excavations in accordance with Standard 2 - Sitework, Section 2.7, “Compaction”. Pretension guys as shown on the final erection drawings.

(2) Perform load tests on up to 10 percent of guy anchors to verify manufacturer's rated strength and installation methods. Anchors shall hold maximum load listed in design data for 5 minutes. Maximum allowable movement shall be 2 inches or 10 percent of helix or disk diameter, whichever is less. Number of tests and specific anchors to be tested shall be at the discretion of the COR.

4. CLIMBING PROVISIONS:

(1) Trial fit removable climbing rung sections and removable steps on every structure.

(2) After inspection by the COR, remove all removable climbing rung sections and removable steps and deliver for storage.

5. STRUCTURE ORIENTATION: Install tangent structures so that the transverse structure axes are perpendicular to the centerline of transmission line, and install angle structures so that the transverse structure axes are perpendicular to the line angle bisectors, except structures listed in the “Special Structure Orientation” table in the “Transmission Line Steel Pole Structures” Division of the project specifications.

6. FIELD WELDING: Field welding, including welding procedures and welders, shall be in accordance with Section 6.1.6, “Fabrication”. Perform nondestructive weld tests and inspect field welds in accordance with Section 6.1.7, "Nondestructive, Metallographic, and Macroetch Weld Tests". Clean field welds by sandblasting or power grinding.

Repair damaged paint, galvanizing, metallizing, or polyurethane coating in accordance with the Sections 6.1.9, “Galvanizing”, 6.1.13, “Painting”, or 6.1.14, “Polyurethane Coating”.

7. DIRECT-EMBEDDED H-FRAME STRUCTURES: If groundline elevations vary by 5 feet or less at direct-embedded H-frame legs, install structures vertically plumb so that the center conductor attachment is the same distance above groundline as if on level ground. If groundline elevations vary by more than 5 feet, notify the COR.

Concrete backfill projections shall extend 18 inches above groundline for both legs of H-frame structures when concrete backfill is specified.

8. TEMPORARY GUYING REQUIREMENTS: Where conductors or overhead ground wires are temporarily dead-ended on self-supporting structures, the structures shall be guyed to remain plumb until final conductors and ground wires are strung at some future date. Variation from plumb shall not exceed 3 inches at any elevation in any horizontal direction after initial stringing.

9. VIBRATION CONTROL: Before insulators, conductors, or overhead ground wires are installed, members shall be restrained or dampened, if necessary, to prevent fatigue crack initiation and propagation due to fluctuating loads.

10. INSTALLATION TOLERANCES: Allowable variations from specified dimensions and locations for installed structures are as follows:

    (1) Centerline Location: Within 3 inches of theoretical centerline location.

    (2) Embedment Depth, "E": Minus 6 and plus 24 inches, where rock is not encountered; minus 3 and plus 12 inches, where rock is encountered.

    (3) Installed Height, "H": Plus or minus 12 inches.

    (4) Installed Position Prior to Stringing:

        1) Variation from plumb shall not exceed 6 inches at top of structure in any horizontal direction.

        2) Variation in Longitudinal Location of Conductor Attachments at End of Davit Arm: Plus or minus 2 inches per 10 feet of arm length from theoretical location.

Western
AREA POWER
ADMINISTRATION

CONSTRUCTION STANDARDS

STANDARD 7

WOOD POLES

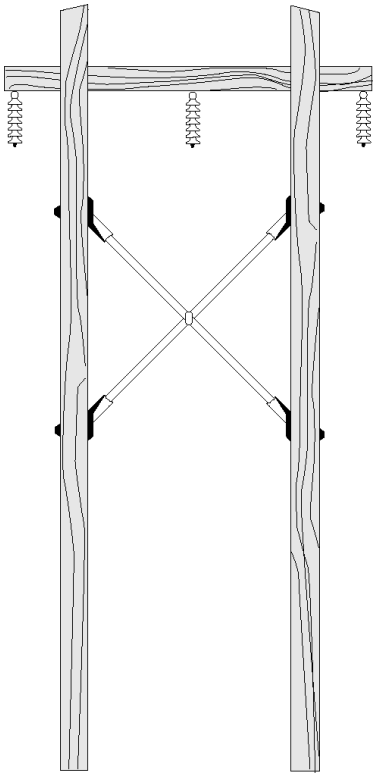

July 2009

SAFETY
A HABIT TO LIVE BY

STANDARD 7 - WOOD POLES

TABLE OF CONTENTS

Page Number

SECTION 7.1--WOOD POLE STRUCTURES 3

7.1.1 GENERAL 3
1. Structures 3

7.1.2 CONTRACTOR-FURNISHED DATA 3
1. Data Sheets 3
2. Certifications 3

7.1.3 MATERIAL 4
1. Wood Poles 4
2. Crossarms 5
3. Wood Braces 5
4. Knee Braces 6
5. Hardware and Associated Material 6
6. Welding 7
7. Plate and Angle Galvanizing 7
8. Hardware Galvanizing 7
9. Alternate Backfill 7

7.1.4 QUALITY CONTROL 7
1. Wood Poles 7
2. Crossarms and Braces 7
3. Inspections and Tests 8

7.1.5 MARKING 8
1. Wood Poles 8
2. Crossarms and Braces 8

7.1.6 WOOD TREATMENT 8
1. Wood Poles 8
2. Crossarms and Braces 9
3. Field Treatment 9

7.1.7 STORAGE, HANDLING, AND TRANSPORT 10
1. Poles 10
2. Crossarms and Braces 10
3. Hardware and Associated Material 10

7.1.8 ASSEMBLY 10
1. Poles 10
2. Crossarms 10

7.1.9 INSTALLATION 10
1. Poles 10
2. Crossarms 11
3. X-Braces 11
4. Knee Braces and Vee Braces 12
5. Pole Bands 12
6. Bolts 12
7. Miscellaneous Structure Material 12

SECTION 7.2--GUYS AND ANCHORS 15

7.2.1 MATERIAL 15

1. Guy Wire 15
2. Attachment Hardware 15
3. Sheave Wheels 15
4. Guy Strain Isolators 15
5. Guy Wire Protectors 15
6. Guy Wire Markers 15
7. Guy Anchors 15

7.2.2 INSTALLATION 16
1. Structure Guys 16
2. Guy Anchors 16

SECTION 7.3--BOG SHOES AND ANCHORS 17

7.3.1 GENERAL 17

7.3.2 MATERIAL 17
1. Bog Shoes 17
2. Bog Anchors 17

7.3.3 INSTALLATION 17
1. Bog Shoes 17
2. Bog Anchors 17

SECTION 7.1--WOOD POLE STRUCTURES

7.1.1 GENERAL:

1. STRUCTURES: The Bidding Schedule items for the various types and lengths of wood pole structures include the following:

   (1) Earthwork: Performing earthwork for placing poles and anchors, including excavation, unwatering as required, placing and compacting backfill, drilling holes in rock for grouted anchors, and other earthwork as required to complete installation of poles and anchors.

   (2) Wood Pole Structures: Furnishing and constructing wood pole structures including installing the following material, complete with associated hardware, in the quantities listed for the respective structures on the drawings:

      1) Poles, crossarms, and braces as applicable.

      2) Guy assemblies, one guy, either single or double guy strand, shall include the length of guy assembly; with strand and fittings for guy attachment to connect the guys to the pole bands and to the anchor rods. The Contractor will not receive extra payment for guys longer than shown on the drawings.

      3) Guy anchors, including copper-clad anchor rods, and anchor accessories.

      4) Structure grounding including staples, ground wire, ground rods and counterpoise where required. See the "Electrical" Standands.

      5) Two aerial patrol number signs on the first structure in each station mile and all structure number signs. See the "Electrical" Standards.

      6) Overhead ground wire support assemblies. See the "Electrical" Standards.

   (3) Submittals: Providing test reports, data sheets, and certificates in accordance with the "Contractor-Furnished Data" paragraph. Provide purchase orders in accordance with the "Contractor-Furnished Material" paragraph of the "General Requirements" Standard.

7.1.2 CONTRACTOR-FURNISHED DATA:

As soon as practical after award of contract and before any material is installed, furnish three copies of the following data, which shall include sufficient information to show that the material meets the intent of these specifications.

1. DATA SHEETS: Catalog data sheets or detail purchase orders for the following:

   (1) Wood poles.
   (2) Crossarms, including sketch showing crossarm drilling details.
   (3) Braces.
   (4) Pole bands.
   (5) Strain bands.
   (6) Guy wires.
   (7) Guy clamps.
   (8) Anchor rods.
   (9) Guy anchors, markers, and/or protectors.
   (10) Miscellaneous hardware, fittings, and bolts.
   (11) Material Safety Data Sheets (MSDS).

2. CERTIFICATIONS: Certified copies of records or test results as follows:

   (1) Guying System: Submit guy, hardware, and anchor data and drawings for approval. Data shall include test results and manufacturer's certification that the guying system will develop the required capacity.

   (2) Sapwood Test: A boring shall be made after treatment at the crown of the midpoint in each pole.

(3) Treatment Tests: Wood products shall be inspected in accordance with AWPA M2 to assure compliance with the requirements in AWPA C4, or as specified herein. The penetration of preservative shall be tested in accordance with the requirements of AWPA A3. The retention of preservative shall be tested in accordance with the requirements of AWPA A5 or AWPA A9. Borings shall be taken in through-bored or deep-incised areas. Penetration tests shall be performed on each pole. A single boring shall be taken from each of 20 randomly selected poles to determine the retention of preservative.

Treatment test results shall show:

1) Compliance with applicable AWPA specifications.
2) Number and type of pieces per charge.
3) Specie of wood.
4) Kind of preservative used.
5) Depth of sapwood.
6) Penetration obtained.
7) Retention obtained.
8) Moisture content after treatment.

(4) Preservative Tests: The preservative used in the treating of wood products shall be tested in accordance with AWPA M2 and AWPA A5 (Method 5 for pentachlorophenol and Method 7 for copper naphthenate).

7.1.3 MATERIAL:

1. WOOD POLES: Conform to the following:

(1) Specifications and Dimensions: ANSI 05.1, unless otherwise specified.

(2) Class: Shall be Class 1 or Class 2 with a maximum top circumference of 39 and 38 inches, respectively, unless specified otherwise in the Bidding Schedule.

(3) Specie: Only Pacific Coast Douglas Fir (Fir) or Western Red Cedar (Cedar) poles shall be permitted.

(4) Drilling: Poles shall be bored for crossarms, braces, post insulators, pole bands, and miscellaneous hardware before treatment in most cases.

(5) Incising:

1) Incising of Fir poles may be required to meet the penetration or checking requirements of the preservative treatment. The pattern and depth of incising of the pole shall be at the option of the Contractor. Incising shall be accomplished in a manner which will not unduly damage the surface of the pole by splintering, raising the wood fibers from the surface, gouging, or loosening the sapwood from the heartwood.

2) Incising of Cedar is not required.

(6) Through-Boring:

1) The ground line of the Fir poles shall be through-bored before treatment in accordance with drawing 41 6106. Ground line shall be determined per ANSI 05.1 unless specified otherwise.

2) Through-boring is not required for full-length treated Cedar.

(7) Marking Disc Recesses: Shall be placed on the pole face and butt before treatment. Recesses on the face shall be placed approximately 12 feet from the butt on poles 55 feet and shorter, 14 feet from the butt on poles between 60 and 75 feet, and 16 feet from the butt on poles 80 feet and longer. The recesses shall have flat bottoms, a minimum 2-inch diameter, and a depth of 1/4 inch to 1/2 inch at the recess periphery.

(8) Gaining: If adjustable phase fittings are not used, poles shall be gained to a depth of 1/4 inch for poles with a diameter equal to or less than the minimum width of the phase fitting. Gains for crossarms on poles having sweep or curvature shall be cut so that the crossarms will be mounted at right angles to the plane of the greatest curvature. Only gaining necessary for hardware connections will be allowed.

(9) Roofing: Poles shall be roofed 15° from horizontal before treatment. Unless otherwise approved, slope pole roofs toward or away from the center of the structure.

(10) Pole Antisplitting Devices: Shall be placed in pole tops before treatment and be equal to "Star-Lock" which is manufactured by the Bayne Company, South 4333 Locust Road, Spokane, WA 99206.

2. CROSSARMS: Shall be glued laminated and conform to the following:

(1) Glued Laminated:

1) General: The laminating stock shall consist of Pacific Coast Douglas Fir.

2) Manufacture: Material, manufacture, and quality control shall be in conformance with ANSI/AITC A190.1, ANSI 05.2-1, and AITC 114.

3) Laminating Combinations: Shall meet the requirements of ANSI/AITC A190.1, Structural Glued Laminated Timber, and shall provide an overall crossarm tensile modulus of rupture of 7,400 psi based upon WET conditions of service.

4) Adhesives: Wet-use type complying with ANSI/AITC A190.1 and ASTM D 2559. Melamine urea adhesives shall not be used.

5) Appearance: As specified in AITC 110, Industrial Appearance Grade, and AITC 114. Edges of crossarms shall be eased to 3/16-inch radius.

(2) Drilling: Crossarms shall be drilled before treatment in accordance with a Western-approved sketch showing crossarm drilling details. Holes in crossarms shall be drilled 1/8 inch larger than their respective bolt diameters.

(3) Cross Section: Crossarms shall have a finished cross section as shown on the drawings.

3. WOOD BRACES:

(1) Solid-Sawn:

1) Lumber: Seasoned Pacific Coast Douglas Fir, cut from live timber, and kiln-dried or air seasoned in accordance with AWPA C25.

2) Manufacture: Manufactured in accordance with ANSI 05.3, free of heart center (FOHC), surfaced four sides (S4s) after seasoning, and incised four sides to depth of 3/16 inch. Lumber shall provide an ultimate design value of 6,600 psi in bending.

Maximum knot sizes for braces shall be as follows:

Face Width (inches)	Knot Size (inches)
3 3/8 and 3 5/8	3/4
4 3/8	1
5 3/8	1 1/8
8 1/2	1 1/2

(2) Glued Laminated:

1) General: The laminating stock shall consist of Pacific Coast Douglas Fir.

2) Manufacture: Material, manufacture, and quality control shall be in conformance with ANSI/AITC A190.1 and AITC 114.

3) Laminating Combinations: Shall meet the requirements of ANSI/AITC A190.1, Structural Glued Laminated Timber.

4) Adhesives: Wet-use type complying with ANSI/AITC A190.1 and ASTM D 2559. Melamine urea adhesives shall not be used.

5) Appearance: As specified in AITC 110, Industrial Appearance Grade and AITC 114.

(3) Cross Section: Wood braces shall have a finished cross section as shown on the drawings.

4. KNEE BRACES: Shall be fiberglass and conform to the following:

(1) Fiberglass: Outside knee braces shall be made of fiberglass with a minimum ultimate strength of 25,000 pounds.

5. HARDWARE AND ASSOCIATED MATERIAL:

(1) Steel Angles: Steel shall conform to ASTM A 36/A 36M. Pieces shall be fabricated in accordance with the wood pole structure drawings.

(2) Bolts, Nuts, Locknuts, and Lag Screws: Bolts, nuts, and lag screws shall be square headed and in accordance with ANSI C135.1. Unless otherwise specified, rolled or cut threads of the American Standard coarse-thread series shall be furnished. The 7/8-inch double-arming bolts shall be furnished with four square nuts and threaded 6 inches at each end. Nuts and locknuts shall run freely (hand fit) the entire length of the threads. Locknuts shall be Type "MF". Bolts used in overhead ground wire assemblies shall be furnished with hexagonal head, hexagonal nut, and cotter key and shall be made of steel commensurate with the ultimate strength specified for the hardware. All pinned hardware, including guy strain insulators, shall be supplied with a bolt, nut, and cotter key. For bolt lengths "as required", tolerances shall be 2 inches beyond the locknut for a maximum length and two threads beyond the locknut for a minimum.

(3) H-Frame Crossarm Fittings: Steel adjustable spacer fittings shall be made of 1/4-inch steel for 69- and 115-kV construction and 5/16-inch-thick steel for 230-kV construction. Fittings shall meet the requirements of ASTM A 36/A 36M and shall be Hughes Brothers Catalog No. 3414 or 3415, Brooks Manufacturing Company Catalog No. 586 or 587, or equal. Plates shall show no defects after being bent. Each phase fitting shall support a minimum load of 4,000 pounds without evidence of permanent deformation and shall have an ultimate strength of not less than 10,000 pounds.

(4) Twisted Shackles: Equal to Hughes Brothers Catalog No. 2866. Twisted shackles shall be furnished as part of the structure material.

(5) End Fittings: Braces shall be furnished complete with end fittings.

(6) Brackets: Each angle or extension bracket shall support a minimum load of 5,000 pounds without evidence of permanent deformation and shall have an ultimate strength of not less than 12,500 pounds.

(7) Square Washers: Standard commercial quality.

(8) Spring Lockwashers: Standard commercial quality.

(9) Pole Bands: Pole top bands for overhead ground wire suspension assemblies on H-frame structures shall be equal to Hughes Brothers Catalog No. 2845-B. Type A four-way strain bands for pole-to-pole ties and for all overhead ground wire attachments and guys on 3-pole structures shall be equal to Hughes Brothers Catalog No. 3103, Joslyn J25967 series, or an approved equal. Type B four-way strain bands for conductor tension assemblies and conductor guys shall be equal to Hughes Brothers Catalog No. 3112, Joslyn J25969 series, or an approved equal. Pole top bands, strain bands, connecting links, and ground clips shall be made of steel which will meet the requirements of ASTM A 36/A 36M.

(10) Dead-end Tees: May be used in lieu of pole bands. Dead-end tees shall have equivalent strength.

6. WELDING: Welding shall be in accordance with the provisions of ANSI/AWS Code D1.1, "Structural Welding". Surfaces of finished beads and adjacent metal shall be thoroughly cleaned by sandblasting to such an extent that zinc coating, when applied, will adhere firmly, uniformly, and permanently to the coated surfaces.

7. PLATE AND ANGLE GALVANIZING: Plates and angles shall be galvanized after fabrication. After cleaning, material shall be zinc coated (galvanized) in accordance with ASTM A 123.

8. HARDWARE GALVANIZING: Bolts, nuts, washers, locknuts, and lag screws shall be galvanized in accordance with ASTM A 153. Metal shall be free from weld splatter and flux, burrs, sharp edges, and dross and shall be smooth so that interconnecting parts will fit properly. Bolts shall be galvanized after being threaded, and excess zinc shall be removed from the threads. Nuts and locknuts shall be tapped after being galvanized.

9. ALTERNATE BACKFILL: Poly-set by Utility Structural Systems, 9430 Telephone Road, Houston, TX 77075, or equal, may be used as a backfill system. The system shall be capable of working in water and shall be used in accordance with the manufacturer's recommendations.

7.1.4 QUALITY CONTROL:

1. WOOD POLES:

   (1) General: In accordance with ANSI 05.1, except as follows:

      1) Spiral Grain: The maximum twist of grain that is permitted is 1/2 twist in 18 feet.
      2) Sweep: Shall be measured from butt of pole.
      3) Inner Bark: All inner bark shall be removed.

   (2) Seasoning: Seasoning of Fir poles shall be by the Boulton drying method or a combination of Boulton drying with air seasoning or with kiln-drying in accordance with ANSI 05.1. Seasoning of Cedar shall be by kiln drying or a combination of air seasoning and kiln drying in accordance with ANSI 05.1.

      1) Boulton drying solution temperature shall be kept between 180°F and 220°F for not less than 24 hours to remove any incipient decay. The average moisture content using the oven-drying method of AWPA in the 0.5- to 1.5-inch zone at midlength shall not exceed 18 percent after Boultonizing and prior to pressure treatment.

      2) Air seasoning of Fir shall not exceed 2 years.

      3) For kiln drying on Fir and Cedar, the maximum dry bulb temperature shall be increased gradually and shall not exceed 160°F and 190°F, respectively. The maximum wet bulb temperature shall not exceed 50°F, with the exception that during the first 24 hours, there is no limitation on wet bulb depression.

   (3) Treatment: Poles which do not meet the preservative penetration and retention requirements of these specifications shall be rejected. Wood shall be dry to the touch at the time of installation.

2. CROSSARMS AND BRACES:

   (1) Glued Laminated Timber: In accordance with ANSI/AITC A190.1.

   (2) Solid-Sawn Timber: In accordance with paragraph 169a, "Select Structural Transmission Crossarms, Planks, and Timbers", of the West Coast Lumber Inspection Bureau Grading Rules No. 16. Moisture content shall not exceed 22 percent after seasoning, and the moisture content gradient shall not exceed 5 percent between the center and surface of the crossarm or brace.

3. INSPECTIONS AND TESTS:

(1) Wood Products: Pole supplier shall lay out and turn poles as required for inspection by Western, in accordance with AWPA M2, before and after treatment. Treated poles shall be inspected in accordance with AWPA C1 and M1. Poles may be inspected by Western on a spot check basis. Crossarms and braces may be inspected by Western before and after treatment. Complete tests as detailed in the "Contractor-Furnished Data" paragraph. The COR reserves the right to witness tests and to approve the manner in which the tests are conducted. Furnish all test apparatus and instruments required.

(2) Steel Products: Furnish all hardware and fittings. Inspection of steel material will be made in accordance with the "Contractor-Furnished Material" paragraph of the "General Requirements" Division. Western inspection and tests of material at the mill will be waived. As soon as practicable after contract award, submit, as designated below, certified copies of reports of chemical analyses and physical tests of structural steel and bolts and of chemical analyses and coating tests of galvanizing.

Certified mill test reports for steel shapes and plates shall show customer's order, mill order, and Western specifications number. Mill certification shall show weights of steel furnished for each size and heat number represented by tests. No material shall be shipped until certified copies of reports have been received.

7.1.5 MARKING:

1. WOOD POLES: Poles shall be marked with two aluminum discs in accordance with ANSI 05.1. The discs shall be made of 24-gage aluminum and shall be approximately 2 inches in diameter. The discs shall be punched for nails, placed in the marking disc recesses on the pole face and butt, and attached with two 2-inch aluminum twist nails.

2. CROSSARMS AND BRACES: Glued laminated timber shall be marked with an AITC Quality Mark indicating conformance with ANSI/AITC A190.1, and permanently branded as to stress, grade, species, preservative, and year of treatment. Solid sawn timber shall be marked with a WWPA grade stamp.

7.1.6 WOOD TREATMENT:

1. WOOD POLES:

(1) Preservative:

1) Oil-borne pentachlorophenol and oil-borne copper naphthenate will be the only preservatives permitted. They shall meet the requirements of AWPA P8.

2) Oil solvent shall be Type A and meet the requirements of AWPA P9.

(2) Treatment:

1) Fir poles shall be full length pressure-treated by an empty-cell process in accordance with AWPA C4. After pressure treatment, an expansion bath shall be performed for a minimum of 3 hours, followed by final steaming for a minimum of 2 hours, followed by final vacuum for a minimum of 2 hours.

2) Cedar poles shall be full-length pressure-treated or thermal-treated in accordance with AWPA C4 or C8 respectively.

3) Poles shall be clean and dry to the touch at the time of delivery. Poles that bleed preservative at the plant or at delivery shall be rejected.

4) All borings, except through-borings, shall be plugged with tight-fitting cylindrical wood plugs that have been treated with the preservative used to treat the pole.

(3) Penetration:

1) For Fir poles, penetration of preservative shall be 100 percent in the ground line bored area as shown on drawing 41 6106. The minimum penetration of preservative shall be 90 percent of sapwood in all other areas

where the sapwood has a minimum thickness of 7/8 inch. If the sapwood is less than 7/8 inch thick, the pole shall be incised, and penetration of preservative shall be a minimum of 3/4 inch.

2) For Cedar, the minimum penetration at ground line of the pole shall be 100 percent for 1/8 to 1/2-inch sapwood thickness and 90 percent of the sapwood over 1/2 inch.

(4) Retention:

1) For Fir poles, the retention of preservative shall not be less than 0.60 pounds per cubic foot for Pentachlorophenol and 0.095 pounds per cubic foot for Copper Naphthenate in the assay zone of 0.25 to 1.0 inch from the surface and in accordance with AWPA C1 and C4.

2) For Cedar poles, the retention of preservative shall not be less than 0.80 pounds per cubic foot for Pentachlorophenol and 0.12 pounds per cubic foot for Copper Naphthenate in the assay zone of 0.10-0.60 inches from the surface and in accordance with AWPA C1 and C4.

(5) Moisture Content:

1) For Fir poles, the average moisture content after treatment, oven-dry basis or toluene extraction method, of the 0.5- to 1.5-inch zone at midlength shall not exceed 18 percent.

2) For Cedar poles, the average moisture content after treatment, oven-dry basis or toluene extraction method, of the 0-1.0-inch zone at midlength shall not exceed 18 percent.

Poles shall be tested at random, after treatment, for moisture content. Measurements shall be made with a resistance-type moisture meter equipped with insulated electrodes. These measurements will be taken at midpoint to a depth of 1 inch for Fir and 1/2 inch for Cedar. Poles having a moisture content in excess of that specified shall be rejected.

(6) After treatment, the surface dimension of any check shall not exceed a width greater than 1/2 inch for any 4 feet of continuous length with the exception of the top, which must meet ANSI 05.1. If checks are separated by less than 1/4 inch, they are considered continuous.

(7) Pole may be retreated only once.

2. CROSSARMS AND BRACES:

(1) Glued laminated timber shall be incised on all four sides and treated with a preservative in accordance with AWPA C28 or as stated herein.

(2) Solid-sawn timber shall be incised on all four sides and treated with a preservative in accordance with AWPA C25 or as stated herein.

(3) Pentachlorophenol and copper naphthenate shall meet the requirements of AWPA P8. Solvent for pentachlorophenol and copper naphthenate shall be Type A per AWPA P9. The minimum retention of copper naphthenate preservative shall be:

Thickness of Crossarm (inches)	Assay Zone (inches from surface)	Copper Naphthenate (pounds/cubic foot as copper metal)
under 5	0.4	0.040
over 5	0.5	0.040

Penetration to 2 1/2 inches is required longitudinally from bolt holes and ends.

(4) Timber shall be clean and dry to the touch after treatment.

3. FIELD TREATMENT: Roofs, gains, and field-drilled holes shall be impregnated and treated thoroughly by covering the exposed surfaces.

The preservative treatment shall be a 2-percent copper naphthenate in petroleum solvent. The concentration shall not be less than 19.25 percent, by volume, of copper naphthenate (2 percent copper as metal) and shall be 10-9-0 Green F.O., as manufactured by Chemical Specialties, Inc. (CSI), 276 SW. 43rd Street, Renton, WA 98055, telephone 1-800-801-0078, or an approved equal.

The preservative shall be the premixed type, furnished in the manufacturer's standard size container and ready to use. Apply in accordance with manufacturer's instructions.

7.1.7 STORAGE, HANDLING, AND TRANSPORT:

1. POLES: In accordance with ANSI 05.1 and AWPA M4. Tools producing a penetration of more than 1 inch shall not be used. Untreated poles shall be stacked in such a way as to allow free circulation of air around each pole.

2. CROSSARMS AND BRACES: Protect from elements and store off ground.

3. HARDWARE AND ASSOCIATED MATERIAL: Protect from elements. Store on pallets or in containers.

7.1.8 ASSEMBLY:

1. POLES: Assemble in accordance with the structure drawings.

2. CROSSARMS: Drill and assemble in accordance with crossarm drilling details and structure drawings. Where preassembled crossarms complete with phase fittings are furnished, bolt lengths may be shorter than lengths specified on the furnished drawings. They shall be of sufficient length to extend completely through nuts and locknuts.

7.1.9 INSTALLATION:

1. POLES:

   (1) Site Grading: Grade structure sites as necessary for the structure installations and to ensure that the through-bored area of pole butts will be at the ground level.

   (2) Sloping Ground: For 2- or 3-pole structures located on steeply sloping ground, longer poles shall be used on the lower sides; and the depth of the holes, measured on the downhill sides, shall be at least as deep as shown in Table 7-1.

   (3) Set poles so that the sweep, concave faces of all poles in the same structure face the same direction. Tangent structures shall be set "sweep-to-sweep" or "back-to-back" along the transmission centerline. Angle structures shall be positioned so that the sweep is in the same direction as the guys.

   (4) Pole Holes: Holes shall be dug in the correct locations and shall be large enough to provide space for use of tamping tools all around the poles to the full depth of the holes. Poles shall be carefully placed in the holes so that the structure grounding material will not be damaged or displaced.

   (5) Raking: Poles requiring raking shall be raked the full length of the pole in accordance with Table 7-1. Poles shall not be raked by use of guy wires. Poles with x-bracing shall not be raked.

   (6) Setting: Except as otherwise provided or directed, poles shall be set in accordance with Table 7-1. Poles not required to be raked shall be set plumb and in alignment. Unless otherwise specified, structures at line angles shall be set so as to bisect the angles.

   Pole shall be set to within 3 inches of the specified setting. The tops in 2-pole structures shall be at the same elevation. Poles in 3-pole structures at angle and dead end points and at other points of unbalanced stress shall be set 6 inches deeper than shown in Table 7-1 and poles with extra large diameters shall be used at these points whenever possible.

TABLE 7-1

STANDARD 7 - WOOD POLES

Length of Pole (feet)	Depth of Setting in Earth or Rock (feet)	Rake of Pole for Type 3A-1, 3AB-1 and 3TA-1 Structures (inches)
45	6.5	8
50	7.0	9
55	7.5	10
60	8.0	10
65	8.5	11
70	9.0	12
75	9.5	13
80	10.0	14
85	10.5	15
90	11.0	16
95	11.0	17
100	11.0	18
105	12.0	19
110	12.0	20

(7) Backfill:

1) General: After the poles have been set and aligned properly, the holes shall be backfilled. Unless otherwise specified, holes dug for poles shall be backfilled with earth. Backfill in each hole shall be compacted to a dry density not less than the natural in-place dry density of the surrounding earth. Backfill shall be banked and tamped around the poles to a height of 12 inches above the natural ground surface. Any surplus excavated material shall be leveled neatly. If satisfactory backfill material is not available from excavation or within the immediate vicinity of the structure, the Contractor shall import any backfill material required.

2) Alternate Backfill:

a. General: If alternate backfill is used, place in accordance with manufacturer's recommendations.

b. Material: Rigid polyurethane foam equal to Poly-set by Utility Structural Systems, 9430 Telephone Road, Houston, TX 77075, may be used as a backfill system. The system shall be capable of working in water.

3) Gravel Backfill:

a. General: Use if required in the Bidding Schedule.

b. Material: Gravel shall be free-draining material with a maximum size of 2 1/2 inches.

c. Measurement: The quantity for gravel backfill in the Bidding Schedule is an estimated amount, and payment will be made only for the actual volume of material used as measured in the transporting vehicles.

2. CROSSARMS: Install as shown on the structure drawings.

3. X-BRACES: Install as shown on the structure drawings. Install bolts for attaching x-braces with heads to outside of structure.

4. KNEE BRACES AND VEE BRACES: Install as shown on the structure drawings.

5. POLE BANDS: Install pole top bands and four-way strain bands where shown on the structure and guying drawings. Any ground clips, shackles for pole top bands, one or two connecting links for strain bands, as required, and all other hardware shown on the band drawings shall be furnished and installed as a part of the bands.

6. BOLTS: Install bolts snug tight plus 1/3 turn for bolt lengths up to and including 4 diameters, snug tight plus 1/2 turn for bolt lengths over 4 diameters not exceeding 8 diameters, and snug tight plus 2/3 turn for bolt lengths 8 diameters but not exceeding 12 diameters.

7. MISCELLANEOUS STRUCTURE MATERIAL: Strand for pole-to-pole ties, hardware, brackets, fittings, and other miscellaneous material shall be installed as required to complete the structure installations as shown on the structure drawings.

SECTION 7.2--GUYS AND ANCHORS

7.2.1 MATERIAL:

1. GUY WIRE: ASTM A 475, Class B, high-strength grade, 7 wire, 7/16-inch diameter, galvanized.

2. ATTACHMENT HARDWARE:

   (1) Automatic Dead Ends: When used in place of clamps, shall be spring-loaded vise type as shown on drawing 41 6047. They shall consist of aluminum alloy tubes and yoke, plated cold-forged steel chuck, and stainless steel bails. They shall develop the full strength of the guy strand.

   (2) Twisted Loop Grip Dead Ends: Galvanized steel, equal to those manufactured by Preformed Line Products Company, P.O. Box 91129, Cleveland, OH 44101. They shall develop the full strength of the guy strand.

3. SHEAVE WHEELS: Made of steel which meets the requirements of ASTM A 36/A 36M. The sheave wheel shall have an outside diameter of 2 1/2 inches, with a 13/16-inch hole through the wheel.

4. GUY STRAIN ISOLATORS: Guy strain isolators used on 3TA-1 structures shall be 10-foot fiberglass with a minimum ultimate strength of 30,000 pounds and shall be furnished complete with bolt, nut, and cotter keys in accordance with the drawings.

5. GUY WIRE PROTECTORS: Made of metal of not less than 18 gage and approximately 8 feet long. The protectors and all attachment parts shall be hot-dipped galvanized if made of steel. The protectors shall clamp to the cable at two or more places with U-bolts or other approved methods. The edges and corners of the protectors shall be smooth with no rough points, and the protectors shall be at least three-quarters round.

6. GUY WIRE MARKERS: Markers shall be orange and made of UV-stabilized, high-impact, high-density polyethylene. The markers shall be 96 inches long and full-round with a 2 1/2-inch diameter, and equal to Chance CT079-0228 or Virginia Plastics TGP 25 BB 80.

7. GUY ANCHORS:

   (1) General: Use for anchoring in earth. Use grouted anchors for anchoring in rock.

   (2) Concrete Anchors: In accordance with drawing 41 6049. The copper-covered anchor rod shall be 1-inch diameter x 8 feet long, capable of withstanding a tension of 29,000 pounds, and meet requirements in the copper-covered anchor rod subparagraph.

   (3) Steel Anchors: Anchors shall be a noncorrosive material, and galvanized or coated with an approved noncorrosive material.

      1) Steel Screw Anchors: Equal to those manufactured by A.B. Chance Company General Offices, Centralia, MO 65240. Installed anchor and anchor assembly shall withstand a tension of 29,000 pounds applied along the axis of the anchor rod.

      2) Steel Disk Anchors: Equal to those manufactured by Tubeco Steel and Manufacturing, Inc., 301 East 1st Street, Crane, TX 79731. Installed anchor and anchor assembly shall withstand a tension of 29,000 pounds applied along the axis of the anchor rod.

   (4) Grouted Anchors: In accordance with drawing 41 6050.

      1) Grout: Five Star Grout by U.S. Grout Corporation, 401 Stillson Road, Fairfield, CT 06430, or equal.

      2) Copper-Covered Anchor Rods: Continuous molten copper welded to a steel core. Threaded at both ends and complete with a nonferrous thimble or twin-eye head for 7/16-inch diameter, galvanized-steel strand and a combination of one nonferrous washer and one bronze closed-end nut or one bronze square nut and one bronze cap nut. Rods shall be 1-inch diameter x 8 feet long. Rods, nuts, and washers shall be highly corrosion resistant when assembled and placed in the ground. The completed anchor rod assembly with anchor held immobile shall withstand a tension of 29,000 pounds applied to the thimble or twin-eye along the axis of the anchor rod.

7.2.2 INSTALLATION:

1. STRUCTURE GUYS:

   (1) General: Construct where required by the drawings. Guys shall be tightened to take out the slack in the guy strand, but the tension shall not be sufficient to cause noticeable deflection of poles.

   (2) Guy Protectors: Install guy protectors as directed by the COR in locations exposed to pedestrian traffic in towns or cities and adjacent to unfenced highways.

   (3) Guy Wire Clips: May be used for serving the ends of the guy strand provided they are installed by means of a tool designed for that purpose. In lieu of guy wire clips, the use of noncrimping-type or sleeve-type of servicing device will be acceptable.

   (4) Guy Wire Markers: Install guy wire markers at groundline at all guy locations.

2. GUY ANCHORS:

   (1) Concrete Anchors: Placing a concrete anchor shall consist of excavating as required, installing anchor and anchor rod in position, backfilling, and compacting backfill. After the anchor and anchor rod have been set and aligned properly, the excavation made for anchor installations shall be backfilled with suitable material and thoroughly tamped in layers not more than 6 inches thick. Backfill shall be compacted to a dry density of not less than the natural in-place dry density of the surrounding earth. Surplus excavated material shall be leveled neatly. Install in accordance with drawing 41 6047.

   (2) Steel Screw Anchors: Screw anchors shall be power installed according to manufacturer's recommended procedure.

   (3) Steel Disk Anchors: Steel disk anchors shall be installed according to manufacturer's recommended procedure.

   (4) Grouted Anchors: Install as shown on drawing 41 6050. Placing the anchor shall consist of drilling the required hole, installing the anchor rod in position, and grouting in accordance with manufacturer's instructions.

   (5) Guy Anchor Tests: If steel disk or screw anchors are used, load tests shall be performed to verify manufacturer's rated strength and installation methods. Anchors shall hold required load for 2 minutes without significant movement. Load tests shall be performed by the Contractor on a minimum of 10 percent and up to 100 percent of the anchors installed, as directed by the COR.

SECTION 7.3--BOG SHOES AND ANCHORS

7.3.1 GENERAL:

Bog shoes and anchors may be required where wet soils do not provide a suitable base to support poles. Use if required in the Bidding Schedule.

7.3.2 MATERIAL:

1. BOG SHOES: Pressure-treated Douglas Fir or Lodge-Pole Pine and constructed in accordance with drawing 41 9019. Timbers may be round or rectangular in section with a minimum diameter or width of 8 inches.

2. BOG ANCHORS: Reinforced concrete and constructed in accordance with drawing 41 9019.

7.3.3 INSTALLATION:

1. BOG SHOES: Installed as shown on drawing 41 9019 and where directed by the COR.

2. BOG ANCHORS: Installed as shown on drawing 41 9019 and where directed by the COR.

Western
AREA POWER
ADMINISTRATION

CONSTRUCTION STANDARDS

STANDARD 8

GLUED LAMINATED STRUCTURES

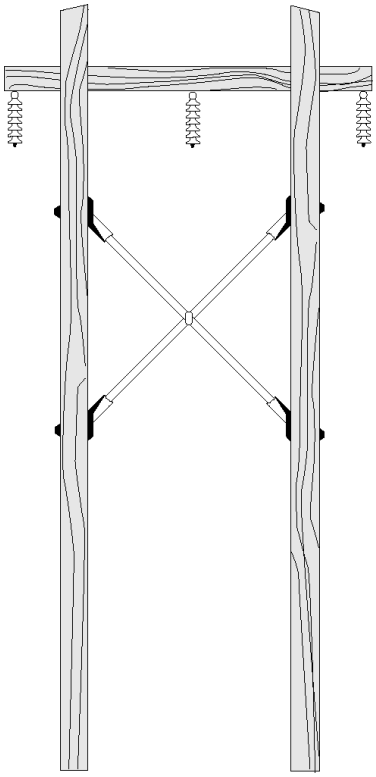

July 2009

SAFETY
A HABIT TO LIVE BY

STANDARD 8 - GLUE LAMINATED STRUCTURES

TABLE OF CONTENTS

Page Number

SECTION 8.1--GLUED LAMINATED STRUCTURES 3

8.1.1 GENERAL 3
1. Earthwork 3
2. Structures 3

8.1.2 CONTRACTOR-FURNISHED DATA AND DRAWINGS 3
1. General 3
2. Design Data Shall Include 4
3. Approval Drawings 4
4. Final Original Drawings 4
5. Mail and Submittal Requirements 4

8.1.3 DESIGN REQUIREMENTS 5
1. General 5
2. Specific Requirements 5
3. Embedment Design 5

8.1.4 MATERIAL 5
1. General 5
2. Hardware and Associated Material 5
3. West Coast Region Douglas Fir Glued Laminated Wood Poles 5

8.1.5 QUALITY CONTROL 7
1. General 7
2. Framing 7
3. Humidity 8
4. Adhesives 8

8.1.6 MANUFACTURE 8
1. Edge Joints 8
2. End Joints 8
3. Repairs 8
4. Second Stage Gluing 8
5. Proof-Loading 8
6. End Joint Spacing 8
7. Dimensions and Tolerances 8
8. Appearance 9

8.1.7 POLE MARKING AND CODE LETTERS 9
1. General 9

8.1.8 TESTING AND INSPECTION 9
1. Requirements 9
2. Material 9
3. Void-Filling Compounds 9
4. Records 10
5. Quality Control System 10

8.1.9 STORAGE, HANDLING, AND TRANSPORTING 10
1. Acceptance 10

8.1.10 INSTALLATION.....10

SECTION 8.1--GLUED LAMINATED STRUCTURES

8.1.1 GENERAL:

The Bidding Schedule items for the various types and lengths of glued laminated structures include the following:

1. EARTHWORK: Performing earthwork for placing poles and anchors, including excavation, unwatering as required, placing and compacting backfill, drilling holes in rock for grouted anchors, and other earthwork as required to complete installation of poles and anchors.

2. STRUCTURES: Designing, detailing, and furnishing glued laminated wood pole structures complete with foundation designs and embedment depths and the following:

   (1) Poles, crossarms, and braces as applicable.

   (2) Attachment hardware, connection bolts, nuts, and locknuts.

   (3) Guying requirements including guy assemblies. One guy, either single or double guy strand, shall include the length of guy assembly; with strand and fittings for guy attachment to connect the guys to the pole bands and to the anchor rods. The Contractor will not receive extra payment for guys longer than shown on the drawings.

   (4) Guy anchors, including copper-clad anchor rods, and anchor accessories.

   (5) Structure grounding including staples, hardware grounding clips, ground wire, ground rods and counterpoise where required. See the "Transmission Line Electrical" Standard and standard drawing 41 1012.

   (6) Two aerial patrol number signs on the first structure in each station mile and all structure number signs. See the "Transmission Line Electrical" Standard.

   (7) Overhead ground wire support assemblies. See the "Transmission Line Electrical" Standard.

8.1.2 CONTRACTOR-FURNISHED DATA AND DRAWINGS:

1. GENERAL: Use United States standard units of measurement and English words, signs, and symbols. Submit data and drawing of structures. Include design calculations for all structural components. Drawings shall be new originals. Reproducibles of specification drawings are not acceptable.

   Data and drawings shall be thoroughly checked for accuracy and completeness before submittal. Western will not check details and intermediate dimensions.

   Western will return one set of the design data sheets which require changes and one print of each drawing marked to indicate approved or not approved and any required changes. The Contractor shall change the designs and details which Western determines necessary to make the finished structures conform to these specifications.

   Western's approval time is 30 calendar days. Western approval shall not relieve the Contractor from meeting the specifications requirements nor the responsibility for design and drawing correctness. Fabrication prior to design data and drawing approval shall be at the Contractor's risk.

2. DESIGN DATA SHALL INCLUDE:

   (1) General dimensions and weight.

   (2) Total ultimate loads and moments including the ultimate moment capacity at ground line and splices.

   (3) Maximum deflection at top of structure.

   (4) Camber requirements. Raking of the poles will be permitted.

   (5) Certification that the Contractor has:

      1) Successfully designed and supplied manufactured items of comparable magnitude and purpose for a 3-year period.

      2) Manufacturing facilities used to supply glued laminated structures are adequate for the type and size of structures required.

3. APPROVAL DRAWINGS: Prior to fabrication, submit for approval, the drawings for the structures. The submittal shall include:

   (1) Erection drawings showing the following:

      1) Dimensions.

      2) A complete bill of material, including hardware and weights, listing all material for one structure or the portion shown thereon. Total weight of one complete structure shall be noted.

      3) Weight, center of gravity, lifting location or lifting method for entire structure.

      4) Camber orientation as it relates to direction of transmission line.

      5) Foundation auger diameter, embedment depth, and rake of pole if required.

4. FINAL ORIGINAL DRAWINGS: Prior to pole shipment, furnish originals or positive reproducibles or electronic copies on 3.5-inch diskette.

5. MAIL AND SUBMITTAL REQUIREMENTS:

   (1) Mail submittals to the Civil Engineer at the address furnished in the project specifications.

   (2) Design Data: Forward two sets to the Civil Engineer. Send a copy of the transmittal letter to the COR.

   (3) Approval Drawings: Forward one set of positive reproducibles and two sets of prints or electronic copies on a 3.5-inch diskette to the Civil Engineer. Send a copy of the transmittal letter to the COR.

   (4) Final Reproductions:

      1) Forward one set of positive reproducibles and two sets of prints to the COR. Send copy of transmittal letter to the Civil Engineer.

      2) Forward one set of prints or electronic copies on a 3.5-inch diskette to the Civil Engineer.

(5) Final Original Drawings: Forward by certified mail to the Civil Engineer.

8.1.3 DESIGN REQUIREMENTS:

1. GENERAL: Design using published theories accepted by the industry as good engineering practice.

2. SPECIFIC REQUIREMENTS: Design consistent with the following:

   (1) Include proper theory to accommodate stresses from structure deflection (secondary bending).

   (2) Camber structures so that the structure axis are vertical after the conductors are strung.

   (3) The Pole Supplier shall be fully responsible for the structure designs and the satisfactory performance under acceptance tests. Approval by Western does not relieve the Pole Supplier of responsibility for the adequacy of the designs and drawings.

3. EMBEDMENT DESIGN:

   (1) Auger Diameter: Auger diameter shall be the maximum pole base dimension plus a minimum of 12 inches.

   (2) Embedment Depth: The bearing capacity of the soil shall be assumed to be 3,500 psf. The Contractor shall determine the embedment depth.

   (3) Pole Supplier shall determine if a foundation reinforcement system is required. If required, the foundation system shall be an integral part of the structure and shall be included in the structure unit price.

8.1.4 MATERIAL:

1. GENERAL: Furnish all material in accordance with the drawings and the requirements of this specification. Crossarms, bracing, hardware, guys, anchors, and associated material shall conform to the requirements in Standard 7 - Wood Poles.

2. HARDWARE AND ASSOCIATED MATERIAL:

   (1) Bolts, Nuts, and Locknuts: Bolts and nuts shall be square headed and in accordance with ANSI C135.1. Unless otherwise specified, rolled or cut threads of the American Standard coarse thread series shall be furnished. The double arming bolts shall be furnished with four square nuts and threaded 6 inches at each end. Locknuts shall be Type MF.

3. WEST COAST REGION DOUGLAS FIR GLUED LAMINATED WOOD POLES: Conforming to the following:

   (1) General: Poles shall be in accordance with ANSI 05.2 including the following clarification revisions and all applicable AWPA specifications, including C28 and C32, for the preparation and treatment except as modified in this specification.

   All referenced specifications and Standards shall be of the latest revision.

   This specification is to be used in conjunction with the AWPA Standard C1 and M6. Structural Glue Laminated Timber is an engineered, product comprised of assemblies of

specifically selected and prepared wood laminates bonded with adhesives. These assemblies are prepared under AITC Standards 110, 111, and 200.

Lumber shall be West Coast Region Douglas Fir as defined in Section 4.1 ANSI 05.2.

All Laminating lumber shall be graded in accordance with applicable grading rules of the West Coast Lumber Inspection Bureau (WCLIB) for Douglas fir as supplemented by the requirements of ANSI A190.1 and AITC 117.

All glue laminated poles shall have been glued with a wet use adhesive as specified in ANSI/AITC Standard A190.1

1) Flaws: All lumber for laminating poles shall be free of timber breaks.

2) Soundness: Decay in any form is not permitted, including decay in knots in any form.

3) Moisture Content: Shall be per Section 4.3 of ANSI 05.2. The mean equilibrium moisture content shall be 12 percent.

(2) Incising and Through Boring: Laminated poles constructed of Douglas Fir shall be incised prior to treatment. This incising shall be for the full pole length and on all four sides with a minimum depth of 3/4 inch. The pattern shall minimize any damage to the surface of the pole by splintering and shall be a sufficiently dense pattern to assure uniform treatment.

All laminated poles constructed of Douglas Fir shall be incised and through bored prior to treatment in accordance with drawing 41 6106. Drilled holes on the edge faces, shall be omitted for the first two laminations on each side. Care shall be taken on the edge faces to ensure that drill holes do not penetrate along glue lines.

For best results, all cuts and drilling should be done prior to treatment. Care should be taken to avoid mechanical damage in both handling and in service. When mechanical damage occurs, field treatment should be in accordance with AWPA Standard M4.

(3) Treatment of Douglas Fir Poles:

1) General: All Douglas Fir Poles shall be treated in accordance with AWPA specifications C1, C4, M2, and especially C32, except as modified or changed in this paragraph.

2) Preservatives:

The preservative used in the treatment of the poles shall be one of the following:

a. Copper Naphthenate meeting the requirement of AWPA specification P8 (Section 2, Copper Naphthenate). The petroleum shall be hydrocarbon solvent, Type A only, meeting the requirements of AWPA specification P9.

The Copper Naphthenate petroleum solution shall contain not less than one percent (1 percent), by weight, of Copper Naphthenate and not less than two percent (2 percent) copper as metal.

b. Pentachlorophenol petroleum solution consisting of pentachlorophenol meeting the requirements of AWPA specifications P8 (Section 1, Pentachlorophenol) dissolved in suitable petroleum oil meeting the requirements for Type A solvent of AWPA specification P9.

The concentration of pentachlorophenol, as determined in accordance with AWPA specification A5, shall be not less than 5 percent by weight.

3) Penetration: Penetration shall be determined from increment borer cores taken 1 to 2 feet below the brand from each piece of the charge. These cores shall be used to check penetration of the preservative. Additional cores in through-bored members shall be taken from a zone approximately 1 foot above the intended ground line and 1 foot below the top of the drilled zone. These cores shall be assayed for retention. If 90 percent of the boring meet the penetration requirements, the charge shall be accepted, but the non-conforming poles in the charge will be retreated.

   Penetration of preservative shall be 100 percent in the ground line bored area.

4) Retention: The pole shall be treated so as to maintain the minimums noted below (AWPA C4). Retention shall be determined with borer cores taken at the same points as for penetration determination.

   a. For the Copper Naphthenate treatments, the minimum retention of preservative shall be:

Inches From Surface (Incised zone)	Pole Height	Copper Naphthenate LB/FT^3
0.5 to 1.0	All	0.15
2.0 to 2.5	All	0.075

   b. For pentachlorophenol solutions, the minimum retention of preservation shall be:

Inches From Surface (Incised zone)	Pole Height	Pentachorophenol LB/FT^3
0.5 to 1.0	All	0.60
2.0 to 2.5	All	0.30

   c. Color: Upon completion of the treating process, all poles shall be as light colored as reasonably possible to obtain a light to medium brown; color chart range three to seven poles darker than chart seven may be rejected. Poles shall be clean and dry, without excess surface oil.

8.1.5 QUALITY CONTROL:

1. GENERAL: The supplier shall have defined quality control methods and functions available for review and approval. Maintain permanent records on material specifications. The supplier shall eliminate all material that would be considered defective according to these specifications.

2. FRAMING: Drilling, if any, shall be as specified according to the drawings included with the order. Drilling on specified poles and square cut roofing on all poles shall be completed BEFORE the treatment process.

3. HUMIDITY: The relative humidity of the manufacturing area shall be maintained at such a level that the moisture content will not change substantially during the manufacturing process. All bonding shall be performed as soon as practical after checking moisture content.

4. ADHESIVES: Adhesives for structural laminating shall conform to all applicable requirements of ANSI A190.1 to comply with wet conditions of use and be compatible with the selected preservative solution to be used. Adhesives containing urea shall not be used.

8.1.6 MANUFACTURE:

The selection, preparation, assembly, and bonding of the laminations shall be in accordance with ANSI A190.1 and as specified herein.

1. EDGE JOINTS: Unglued edge joints shall be permitted for multiple width lamination lay-up as permitted by ANSI A190.1. The non-cut edge joint gaps shall be limited to 1/4 inch and occasionally to a maximum of 3/8 inch. The cut edge joint gap shall be limited to 1/2 inch and occasionally to a maximum of 3/4 inch. These tolerances are at the time of manufacture.

2. END JOINTS: End joints of laminations shall be pre-glued and cured before assembly of face joint into structural members. Spacing of the end joints shall be as specified in ANSI A190.1.

3. REPAIRS: Structural repairs as defined in ANSI A190.1 are allowed. End blocks as defined in ANSI A190.1 are prohibited.

4. SECOND STAGE GLUING: When two or more laminated members that are over 2 inches in net thickness are glued together, a gap-filling adhesive shall be used in accordance with ANSI A190.1.

5. PROOF-LOADING: Proof loading shall be in accordance with ANSI A190.1. All laminated stock in high stress area shall be E-rated lumber.

6. END JOINT SPACING: When proof loading is performed in accordance with ANSI A190.1, end joint spacing is not required.

7. DIMENSIONS AND TOLERANCES: Allowable variations from specified dimensions are as follows:

   (1) Sizes and tolerances for poles shall be in accordance with the following:

      1) Depth: ±1/2 inch.
      2) Width: ±1/4 inch.
      3) Squareness: ±3/8 inch per foot of depth.
      4) Length of poles under 50 feet: +6 inches, -3 inches.
      5) Length of poles over 50 feet: +12 inches, -6 inches.

   (2) Unless specified otherwise on the plans, drawings, or purchase order, holes shall be a minimum of 1/16 inch and a maximum of 1/8 inch larger than the bolt diameter.

   (3) Hole locations: ±1/8 inch.

   (4) The camber or straightness tolerance for poles is ±1/2 inch for members up to 20 feet. For members over 20 feet, the tolerance is increased by ±1/2 inch per each additional 20 feet, or fraction thereof, but should not exceed ±2 inches. These tolerances are at the time of manufacture without allowance for dead load deflection and should be used for straight or slightly cambered members and not more sharply curved members.

8. APPEARANCE: Glued laminated structural members shall be manufactured in accordance with the industrial appearance grade as defined in AITC 110 and as required in 1 through 6 as follows.

   (1) Poles shall be eased to a minimum of 3/4 inch and a maximum of 1 inch.

   (2) After gluing, all members shall be surfaced, at least on the two sides where glue lines are exposed.

   (3) Splintering around the holes caused by drilling, shall be kept to a minimum. Holes shall be drilled perpendicular to the starting and finishing faces of members with a uniform cross section unless otherwise specified, or as specified on the plans and drawings of members with a variable cross section.

   (4) Occasional laminations may contain wane, may be scant of the specified width, or both. These conditions in a lamination shall not be more than 3/16 inch in width.

   (5) Medium splits in the outside laminations of vertical mounted members and short splits in the top laminations of horizontal and diagonally mounted members, developing at the laminating plant after gluing, are permitted.

   (6) All voids in the roof of poles shall be filled (after treating) with a void-filling compound unless otherwise specified. The compound shall be sanded or scraped smooth after patching. Wood dowels may be used to repair improperly drilled holes, as long as the defect does not affect the structural integrity of the member.

8.1.7 POLE MARKING AND CODE LETTERS:

1. GENERAL: The following information shall be included on a metal tag affixed thereto.

   (1) The supplier's code or trademark.

   (2) The plant location and the year of treatment.

   (3) Code letters denoting the pole's species and preservative used. The size designation and/or equivalent class and the length of the pole.

   (4) Poles shall be marked with two aluminum discs in accordance with ANSI 05.1. The discs shall be made of 24-gauge aluminum and approximately 2 inches in diameter. The discs shall be punched for nails, placed in the marking disc recesses, and attached with two twisted 2-inch aluminum twist nails. Marking on the face shall be approximately 6 feet above the ground line.

8.1.8 TESTING AND INSPECTION:

1. REQUIREMENTS: Testing and inspection shall be in accordance with ANSI A190.1 and AITC 200.

2. MATERIAL: Testing and inspection shall be performed on the material and from the production that is supplied on the purchase order and produced in accordance with this standard. Samples for physical testing shall be taken at random.

3. VOID-FILLING COMPOUNDS: Physical tests of void-filling compounds shall be made on samples of daily production in accordance with AITC test 110, as included in AITC 200 to establish compliance with 5.6.6.1 of AITC 200 standard.

4. RECORDS: The results of all strength and wood failure tests of face, edge, and end joints and test of void-filling compounds conducted on material produced in accordance with AITC 200 shall be sent to the purchaser within 5 working days, if requested by the purchaser. Legible copies of hand written records shall suffice.

5. QUALITY CONTROL SYSTEM: The quality control system shall be as specified in ANSI A190.1. Daily records of the material produced under this standard shall be submitted to the purchaser within 5 working days. Daily records shall include, at least, the requirements established in the Manufacturer's Procedures Manual and Quality Control Manual and any others required in this standard.

   (1) Inspection: Treated laminated poles shall be inspected after treatment in accordance with the applicable sections of AWPA Standard M2.

   (2) Penetration: Penetration determination shall be made on 100 percent of the poles regardless of the specie. Penetration determination of the Douglas Fir shall be from one (1) boring per pole at the same location as noted in specification paragraph 1.4.2 and between the marking disc and the ground line. Part of these borings may be used for retention analysis.

8.1.9 STORAGE, HANDLING, AND TRANSPORTING:

Shipments are to be made by truck, and all applicable Federal and State rules and regulations shall be followed. No pole shall be permitted to protrude above the top of the side stakes. Unloading of poles is the responsibility of the Contractor unless otherwise stated.

1. ACCEPTANCE: Final inspection and acceptance of each pole will be made by Western at the destination. In case such inspection shows that material does not meet the specifications or have been damaged in transit, then before accepting them from the transportation company and before unloading, Western will report to the Contractor by telephone or fax, who will provide instruction on how to proceed. The Contractor shall pay transportation costs both ways on all rejected poles.

   Neither inspection, waiving of inspection, nor Western’s acceptance shall relieve the processor from obligations to furnish poles to meet the requirements of this specification.

8.1.10 INSTALLATION:

Install structures in accordance with manufacturer's instructions.

Western
AREA POWER
ADMINISTRATION

CONSTRUCTION STANDARDS

STANDARD 9

SUBSTATION - ELECTRICAL

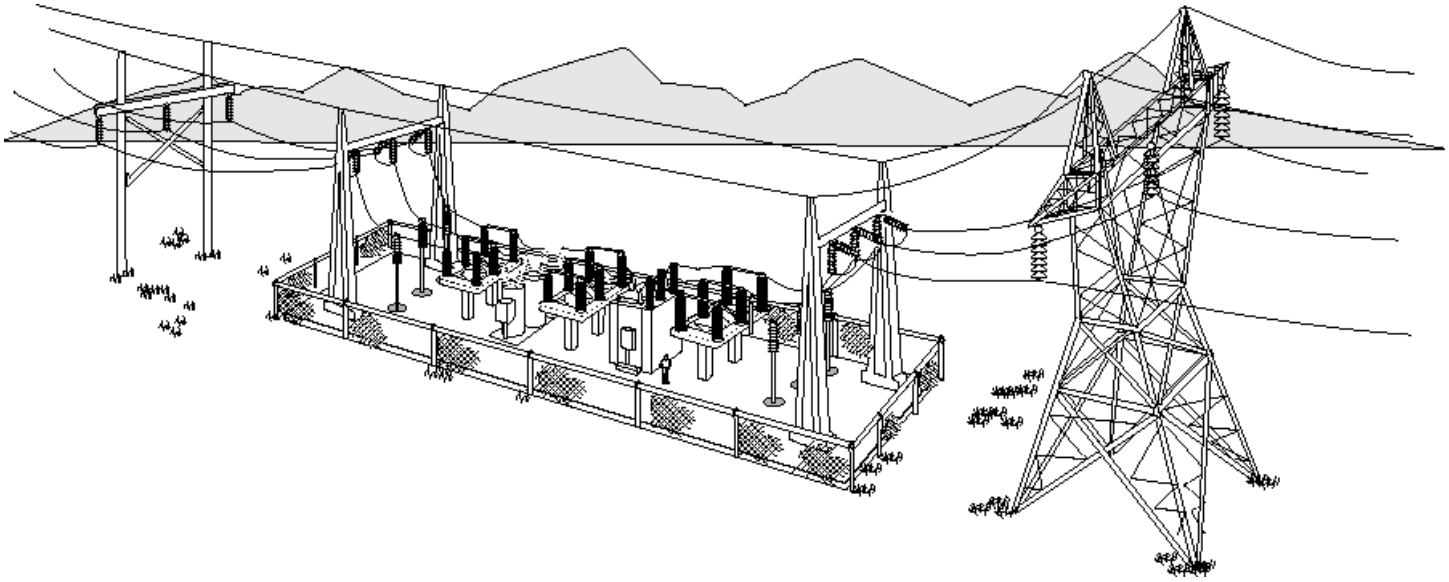

July 2009

SAFETY
A HABIT TO LIVE BY

TABLE OF CONTENTS

Page Number

SECTION 9.1--ELECTRICAL GENERAL 3

9.1.1 ELECTRICAL INSTALLATION 3
1. General 3
2. Equipment and Material 3
3. Installation 4
4. Marking 6
5. Tools 6
6. Spare Parts 6
7. Drawings for Government-Furnished Equipment 6
8. Doble Tests 6
9. Related Items of Work 7

9.1.2 ACCEPTANCE TESTS 7
1. Method A 8
2. Method B 8

9.1.3 ELECTRICAL DRAWINGS AND DATA 13
1. General 13
2. Equipment Installation Drawings and Data 14
3. Equipment Informational Drawings and Data 15
4. Equipment Final Drawings and Data 15
5. Equipment Test Reports 15
6. Equipment Insulating Liquid Pcb Certification 15
7. Insulated Conductor Data 15
8. Right to Use the Contractor's Drawings 16
9. Revised Wiring Diagrams 16
10. "As-Built" Drawings 16

9.1.4 INSULATING OIL 17
1. General 17
2. Sampling and Testing 17
3. Installation 17

SECTION 9.2--GROUNDING, CONDUIT, AND LOW-VOLTAGE CABLE SYSTEMS 19

9.2.1 GROUNDING SYSTEM 19
1. Material 19
2. Installation 19
3. Tests 21

9.2.2 ELECTRICAL CONDUIT SYSTEM 22
1. General 22
2. Material 22
3. Installation 23

9.2.3 INSULATED CONDUCTORS AND CABLES 25
1. General 25
2. Material 25
3. Determination of Conductor Sizes 28
4. Installation 29

9.2.4 TERMINAL BOXES 31
1. General 31
2. Material 31

SECTION 9.3--BUS SYSTEMS 32

9.3.1 OUTDOOR STRAIN AND JUMPER BUSES, RIGID BUS, AND OVERHEAD GROUND WIRE 32
1. Material 32
2. Installation 34

SECTION 9.4--EXISTING OUTDOOR ELECTRICAL EQUIPMENT AND MATERIAL 37

9.4.1 EXISTING OUTDOOR ELECTRICAL EQUIPMENT AND MATERIAL 37
1. Storage of Removed Equipment and Material 37
2. Lost or Damaged Equipment and Material 37
3. Disconnected Grounding Cable Risers 37
4. Disconnected Underground Conduits 37
5. Disconnected Control and Station-Service Power Cables 37

SECTION 9.5--SUBSTATION LIGHTING 38

9.5.1 LIGHTING UNITS 38
1. General 38
2. Installation 38

SECTION 9.6--SUBSTATION SIGNS 39

9.6.1 SECURITY, IDENTIFICATION, DANGER WARNING, AND SAFETY SIGNS 39
1. General 39
2. Installation 39

SECTION 9.7--CONTROL, METERING, AND RELAYING EQUIPMENT 40

9.7.1 DUPLEX SWITCHBOARD SECTIONS 40
1. General 40
2. Material 40
3. Installation 40

9.7.2 UNMOUNTED DEVICES ON EXISTING DUPLEX SWITCHBOARDS 41
1. General 41
2. Material 41
3. Installation 41

9.7.3 DIRECT- AND ALTERNATING-CURRENT DISTRIBUTION BOARDS 42
1. General 42
2. Installation 42

SECTION 9.8--STATION BATTERY AND BATTERY CHARGERS 43

9.8.1 STATION BATTERY 43
1. General 43
2. Installation 43

9.8.2 BATTERY CHARGERS 44
1. General 44
2. Installation 44

SECTION 9.1--ELECTRICAL GENERAL

9.1.1 ELECTRICAL INSTALLATION:

1. GENERAL:

   (1) Requirements: Requirements for substation electrical features shall be in accordance with this Standard, except that electrical features (such as heating, ventilating, and air-conditioning and service building wiring systems) covered by other Standards shall meet the requirements of the applicable Standards.

   (2) Contractor Design: The Contractor shall perform any additional electrical design as required; furnish electrical material and equipment not furnished by Western; install and remove, modify, and reinstall electrical material and equipment as required; and make the electrical installation complete and ready for service. The Contractor shall make revisions of final drawings to show "as-built" conditions. Charges incurred in providing design personnel shall be paid by the Contractor and included in applicable Bidding Schedule items.

   (3) Grout: Grout shall be placed under electrical equipment as required. Grouting shall be in accordance with the Standard 3 - Concrete, Section 3.2.6 "Grouting Mortar for Equipment and Metalwork".

   (4) Western Approval and Inspection: Western will not approve drawings for electrical design nor the equipment and material furnished and installed. Western inspection will be made during the construction period to ensure that the requirements are fulfilled as to material, workmanship, design, installation, and operation. Western reserves the right to inspect any or all equipment and material that will be provided at the supplier's manufacturing plant during fabrication and testing at no additional cost to Western (Western’s inspector’s travel, food, and lodging expense are not the responsibility of the Contractor). Actual ice tests performed on load interrupter and disconnecting switches shall be witnessed by a Western inspector, if prior design ice tests were not made.

2. EQUIPMENT AND MATERIAL:

   (1) General: Electrical equipment and material shall be as specified in this standard, the project specifications, and as shown on the project drawings and in accordance with the NEMA, ANSI, IEEE, ICEA, and ASTM Standards; the NEC; the Federal Specifications; the NESC; and the Standards of the Underwriters' Laboratories, Inc., as applicable. Only new electrical equipment of current manufacture shall be furnished.

   (2) Units of Measurement: Units of measurement shall be in accordance with American Standards, and data, drawings, and nameplates shall be in English.

   (3) Mounting Bolts, Nuts, and Washers: Mounting bolts, nuts, and washers for electrical equipment and material used outdoors and unprotected from the weather shall be galvanized in accordance with ASTM A 153 or of noncorrosive metal. Cadmium-plated mounting hardware will be permitted only where protected in weatherproof enclosures or on equipment located indoors.

   (4) Energizing Heaters for Electrical Equipment: The Contractor shall provide power for and shall make arrangements to energize the heaters for electrical equipment, as recommended by the manufacturer or Western, from the time the equipment is received at the site until final connections are made to the station-service power supply.

   (5) Delivery of Insulating Oil: The Contractor shall contact the COR to arrange delivery of insulating oil required for Government-furnished equipment.

(6) Changes Required by Contractor-Furnished Equipment: If the Contractor-furnished electrical equipment and material are of such size, type, ratings, or other physical properties that changes are required in the designs shown in the specifications, the Contractor shall effect all changes necessary as required and approved by the COR without additional compensation, unless the Contractor can show that the changes are necessary regardless of the manufacturer.

(7) Switch-Operating and Equipment Platforms: The Contractor shall furnish and install switch-operating and equipment cabinet platforms in accordance with the Standard 4 – Substation Metalwork and Transmission Line Lattice Structures. A switch operating platform is required at each operating mechanism of each circuit switcher and each disconnecting, interrupter, and grounding switch. An equipment platform is required at each main electrical control cabinet, each main pneumatic control cabinet, and each compressor housing of electrical equipment. Equipment platforms will not be required for minor connection boxes such as instrument transformer, terminal boxes, and the individual-pole control cabinets of circuit breakers. The location of platforms shall be subject to Western approval.

(8) Painting: Painting of equipment shall meet the requirements of the Standard 12 - Painting.

3. INSTALLATION: All electrical installations, assembly operations, and adjustments shall be in accordance with the following:

(1) Conflicting Requirements: In the event of conflicting requirements, precedence is established by the order of the following:

1) Instructions to Bidders.

2) The project specifications.

3) The drawings included in the project specifications.

4) These standards.

5) The latest edition of "National Electrical Code", "National Electrical Safety Code", and the adopted electrical code of the State in which the construction is located. The Contractor shall cooperate with any agency designated by that State to inspect the electrical installation for conformance with the applicable State code. If there is a conflict between the requirements in the project specifications and drawings, and applicable national or state codes, the more stringent requirements shall prevail

(2) Manufacturer's Instructions: Installation of the electrical equipment shall be in accordance with the directions furnished by the manufacturer's instruction books and, if required, erecting engineers.

(3) Damage or Failure of Material and Equipment: The Contractor shall correct by repair or replacement, at his expense, damage to or failure of any part of the items of material and equipment which in the opinion of the COR was caused by faulty installation, faulty mechanical assembly, or mishandling.

Repair of damaged painted and galvanized surfaces shall be in accordance with the Standard 12 - Painting. The repair of damage to existing installations shall be in accordance with the Standard 1 – General Requirements, Section 1.3.4 "Protection of Existing Installations".

The Contractor shall replace at his expense any insulating oil that is contaminated by faulty handling.

(4) Material Not Specified: Design, installation details, and material not specifically covered in the specifications, these standards or in reference standards shall be subject to the approval of the COR.

(5) Manufacturer's Erecting Engineer: Disassembly, movement, reassembly, assembly, checking, adjustment, installation, tests and preparation for service of equipment shall be accomplished under the direction of a manufacturer's erecting engineer when specified. The Contractor shall follow the instructions of erecting engineers and shall correct any work done contrary to or in the absence of the erecting engineer.

Unless otherwise specified, the equipment manufacturer will furnish the services of the erecting engineer for Government-furnished equipment. The Contractor shall make arrangements with the COR to obtain the services of the erecting engineer for Government-furnished equipment.

Unless otherwise specified, the Contractor shall make arrangements with the equipment manufacturer to obtain the services of erecting engineers for Contractor-furnished equipment and for Government-furnished outdoor equipment which is removed and reinstalled, modified, or transferred from another location.

(6) Contractor's Assembly and Connections: The Contractor shall assemble components of equipment including Government-furnished equipment, such as supporting structures, which is furnished disassembled. The Contractor shall make all electrical wire, cable, conduit, and grounding connections and furnish all miscellaneous material required for making these connections.

(7) Manufacturer's Drawings: Applicable prints of manufacturer's drawings of Government-furnished electrical equipment will be furnished to the Contractor upon request.

(8) Electrical Control and Protective Equipment: Electrical control and protective equipment, including any existing control equipment to be removed and reinstalled, shall have a uniform height. The equipment shall be similar in appearance and general construction so that the installation will have a uniform appearance when the equipment is installed.

(9) Door Latching Mechanisms: Door latching mechanisms on the electrical equipment enclosures shall include provisions for padlock.

(10) Government-Furnished Equipment: Except as otherwise specified in Project Specifications, the Government-furnished equipment will be delivered to the Contractor at the substation site, and the Contractor shall unload the equipment from the trucks. The Contractor shall inspect the equipment for possible damage during shipment or transportation, assemble and fill equipment with oil or SF_6 gas, if needed, and install equipment complete and ready for operation at the locations shown. Western will furnish the oil and SF_6 gas for Government-furnished equipment, and special tools, wrenches, and devices, as furnished by the manufacturer, for assembling the Government-furnished equipment.

The Contractor shall follow the manufacturer's instructions for storing Government-furnished equipment prior to installation.

1) Transformers: Transformers may be shipped with such accessories as bushings, surge arresters, radiators, and pumps removed. Oil for transformers will be delivered to the Contractor in tank trucks at the substation site, or the transformer manufacturer may ship transformers filled with oil. If the transformer oil is shipped to the substation site separately, the Contractor shall have 36 hours from the hour of arrival at the substation site to remove the oil from each tank truck and fill the transformer. Any time required in excess of 36 hours will be paid for by the Contractor at the usual and reasonable rate charged therefore. Transformers will be furnished with multi-ratio, bushing-type current transformers in the high- and low-voltage bushings. The Contractor shall exercise all

possible precautions to prevent moisture or foreign material from entering any portion of transformers. Openings left in the transformer by the removal of covers and accessories shall be sealed as soon as possible with a durable weatherproof material.

2) Capacitor banks: Capacitor banks will be partially assembled into individual racks. Installation will involve erecting steel, insulators, racks, voltage transformers, and making electrical interconnections.

3) Power circuit breakers: Power circuit breakers may be shipped with the bushings removed. SF_6 gas or oil will be delivered to the Contractor in containers at the substation site. Power circuit breakers shall be assembled, and installed at the location shown on the drawings and then filled with SF_6 gas or oil as required. For oil-type power circuit breakers, the Contractor shall have 36 hours from the hour of arrival at the substation site to remove the oil from each container, filter the oil, and place the oil in the power circuit breaker or oil storage tanks in accordance with the "Insulation Oil" paragraph. Any time in excess of 36 hours will be paid for by the Contractor at the usual and reasonable rate charged therefore.

   Circuit breakers shall be checked for proper operating speed in accordance with ANSI C37.09, paragraph 09-5.13, after they have been installed. The Contractor shall mark the time-travel charts for timing tests on the circuit breakers after they have been installed. The Contractor shall furnish a report on the results of the timing tests conducted in the field. He shall also make other checks, adjustments, and tests required by the manufacturer's instruction books and erecting engineers before the breakers are placed in service.

4. MARKING: The Contractor shall mark electrical equipment to be designated, other than power circuit breakers, circuit switchers, load interrupter switches, disconnecting switches, combination fuse disconnecting/disconnecting switches with interrupters, and fuse disconnecting switches with the assigned designations, either by painting or by nameplate, with letters approximately 1 1/2 inches high. Power circuit breaker, circuit switcher, load interrupter switch, disconnecting switch, combination fuse disconnecting/disconnecting switches with interrupter, and fuse switch identification signs are provided for in section 9.6 "Substation Signs".

5. TOOLS: Special tools and appliances furnished by the manufacturer for maintenance and adjustment of its electrical equipment shall become the property of Western. The Contractor shall furnish all additional tools and equipment as necessary to properly install, adjust, and check the operation of the electrical equipment. Special tools furnished with Government-furnished equipment shall be cared for and stored by the Contractor and delivered to Western at the substation site at the time of completion of the contract.

6. SPARE PARTS: Spare parts furnished by the Contractor, and with Government-furnished equipment, shall be cared for and stored by the Contractor and delivered to Western at the substation site at the time of completion of the contract.

7. DRAWINGS FOR GOVERNMENT-FURNISHED EQUIPMENT: Western will furnish applicable instruction books and prints of manufacturers' drawings to the Contractor.

8. DOBLE TESTS: Prior to energization of outdoor electrical equipment installed by the Contractor, Western will perform Doble tests on that equipment. The time for conducting these tests will be determined by the COR.

   The Contractor shall participate in the Doble testing to the extent that he shall remove all electrical connections to each item of equipment to be tested, if connections have been made prior to the testing, and shall restore the connections after the testing has been satisfactorily completed. In addition, the Contractor shall make and remove required connections between the test apparatus and the equipment to be tested.

The Doble testing apparatus will be furnished and operated by Western.

9. RELATED ITEMS OF WORK: Payment for the various items of electrical equipment and material will be made at the applicable unit or lump-sum prices bid therefore in the Bidding Schedule, which prices shall include the costs of the following:

   (1) Performing required design.

   (2) Preparing for storage of existing equipment removed and not reinstalled.

   (3) Furnishing drawings and data.

   (4) Furnishing apparatus necessary to perform required tests.

   (5) Testing and providing assistance for Western testing as required.

   (6) Providing erecting engineers as required.

   (7) Transporting and storing equipment and material.

   (8) Modifying equipment.

   (9) Assembling, adjusting, leveling and grouting, and installing equipment.

   (10) Painting equipment and material in accordance with Standard 12.

   (11) Furnishing and installing brackets, fastenings, bolts, nuts, lockwashers, and other accessories, and drilling holes in steel structures, other than tubular structures, as required for mounting or installing electrical equipment and material.

   (12) Furnishing material for marking assigned designations on electrical equipment to be designated.

   (13) Transporting and handling insulating oil for all electrical equipment requiring insulating oil.

   (14) Furnishing filtering equipment and storage tanks and filtering insulating oil as required.

   (15) Handling spare parts to electrical equipment that requires spare parts.

   (16) Furnishing to Western special tools and appliances supplied by each manufacturer for maintenance and adjustment of the equipment.

   (17) Providing power for and energizing heaters in circuit breaker cabinets until connections are made to station-service supply.

   (18) Making all control, metering, relaying, and station-service power connections, and furnishing miscellaneous material which are required for making these connections to electrical equipment. The Contractor shall estimate the number of connections to be made to the equipment based on prior knowledge or experience with similar equipment. No additional compensation will be allowed the Contractor in the event that actual connections exceed the number estimated by him at the time of bidding.

9.1.2 ACCEPTANCE TESTS:

There are two methods of acceptance tests (Method A and Method B). Method A shall be provided unless the more extensive testing of Method B is required by the Project Specifications. Electrical testing for Method A shall be included in applicable Bidding Schedule items for work requiring such testing.

Electrical testing for Method B shall be included in a Bidding Schedule Item “Electrical testing”. Following are the requirements of the two methods.

1. METHOD A: During a period of time agreed to by the Contractor and the COR, representatives of the Contractor and Western shall make arrangements for a complete check of the wiring of the entire installation. During this period, the Contractor shall process the checkout to completion, shall retain full responsibility for the removal and replacement of any wiring connections as required in processing of the checkout, and shall make any wiring changes which are necessary for proper and adequate functioning of the installation.

   Replace wiring, instruments, and equipment, which are damaged in the checkout process, unless this damage results from negligence by Western as determined by the COR. Wiring checkout shall include the insulation and continuity test of cables and conductors installed by the Contractor. The insulation and continuity tests shall be made after identification tags and sleeves have been installed. The Contractor shall have competent personnel at the site processing the checkout.

   Unless otherwise specified, after any phase of the work has been completed, including the above wiring checkout, the installation will be tested and operated, by and at the expense of Western. The Contractor or his representative may witness the tests.

   Final payment under the contract will not be made until these tests are completed and the COR has determined that the requirements of the specifications and these standards have been fulfilled; provided, that if Western, through no fault of the Contractor or of the material furnished by the Contractor, and except for acts of God or forces beyond Western's control, is delayed in making the acceptance tests beyond a period of 30 days from the date of final completion of the installation of all equipment, payment of the balance due under the contract will be made at the end of the 30-day period.

2. METHOD B:

   (1) General: Prior to beginning on-site testing, a meeting will be conducted at a time and place designated by the COR, with the Contractor, the Contractor’s Test Personnel (CTP), and Western to review the Contractor’s testing procedures and plans.

   None of the following testing requirements or procedures are intended to replicate tests or procedures performed at the equipment manufacturer’s factory or place of assembly. The testing prescribed here is intended only to verify that no equipment damage has occurred in transit, assembly, or erection. The Western site representative shall be notified 72 hours in advance of all testing.

   (2) Personnel: The Contractor shall supply on-site test personnel, hereafter referred to as the Contractor’s Test Personnel (CTP), who shall perform and document the substation tests as listed in this paragraph.

   The Contractor shall designate one of the test personnel as principal. Submit the resume of the principal on-site test person to the COR. The principal on-site test person shall meet the following qualifications:

   1) Minimum of 5 years’ testing experience on similar projects.
   2) Experience shall include projects of similar scope and voltage class.
   3) Employee of a testing firm that has been established for a minimum of 3 years.

   The COR shall have the right to refuse the services of any test personnel that do not meet the stated qualifications.

   (3) Test Reports and Documents: All test report forms will be provided by Western unless the COR approves the use of Contractor-supplied test report forms.

Test reports shall be completed as follows:

1) With no blank or uncompleted sections.

2) In permanent form (ink or type).

3) Submitted to the Western on-site inspector within 48 hours and to the COR within 7 days after any testing is complete. The COR or his designated on-site representative shall have a period of 48 hours to review all test reports and request any such tests be performed again if any results are questionable. Such testing shall be completed without additional expense to Western.

4) Signed and dated as witnessed by the Western on-site inspector.

(4) Instrument Calibration: Test equipment used for any measurements shall be calibrated within 1 year of on-site usage with certification traceable to the National Institute of Standards and Technology relative to their intended use.

(5) Transformer Testing: The testing requirements of this paragraph shall apply to all Government-furnished or Contractor-furnished power transformers including station service transformers. All testing shall be done only after the transformer is ready for service.

1) Ratio Test: The CTP shall determine turns ratios between windings for each winding in every tap changer position. The equipment used shall be a transformer turns ratio tester manufactured by James G. Biddle Company, Multi-Amp Corporation, or equivalent.

2) Coil Resistance: On transformers larger than 1 MVA the CTP shall determine resistance of every winding using a dc micro-ohm meter ("ductor") or a dc low-resistance ohmmeter utilizing a four point measurement method.

3) Fans and Pumps: The CTP shall check fans and pumps for correct operation in both manual and automatic modes including proper voltage, current, and rotation.

4) Alarms and Protective Devices: The CTP shall check calibration of liquid level gauges, liquid and winding temperature gauges, and operation of sudden pressure relay(s), gas accumulation relays, and all other associated devices. Tests shall be performed with fans, pumps, annunciators, and relays in operational mode, and after all wiring is complete. The equipment used shall include hot oil bath, 1 percent accuracy thermometer, sudden pressure relay testing device of a design approved by the COR, and other devices needed for proper testing as listed in the appropriate manufacturer's instruction book.

5) Core Ground: On transformers with 1 MVA or more of capacity, if accessible from the exterior of the transformer, the CTP shall determine the resistance of the transformer core to tank with the core ground removed. Core ground shall be reattached immediately following the test. The equipment used shall be a dc megohm resistance tester using a minimum of 500 V dc. If core ground connection is inside the tank, this test shall be performed immediately prior to final closing of the tank.

6) The CTP shall test all aspects of power transformer winding temperature indicating or alarm circuits. Primary current shall be injected into such circuits and operation and calibration of any dials, indicators, or relays shall be verified. If installed on the power transformer, the calibration of any associated resistive temperature devices (RTD's) shall be verified.

7) The CTP shall test bushing current transformers prior to and after installation of transformer bushings on Government-furnished transformers.

(6) Power Circuit Breakers: The Government will provide a circuit breaker manufacturer's erecting engineer to perform timing tests on the circuit breakers after they have been installed. The CTP shall perform micro-ohm resistance measurements, commonly called "ductor" tests, on all phases of the power circuit breakers as specified in ANSI/IEEE Standard C37.09-1999, Section 5.15, as amended. CTP shall also make all other checks, adjustments, and tests required by the manufacturer's instruction books and erecting engineer before the breakers are placed in service. If the equipment supplier's erecting engineer makes any adjustments to make this equipment meet specifications, the CTP shall perform additional tests at no additional cost to Western.

The Contractor shall provide a gas analyzer and other special equipment, if required by the manufacturer, to analyze the SF6 gas.

All tests shall be performed in the presence of the manufacturer's erecting engineer.

(7) Control or Power Cable: Testing shall not begin on control or power cable until the Contractor has submitted manufacturer's data on all cable supplied. After installation, the CTP shall perform megohmmeter and continuity tests on all control and power cable. The insulation and continuity tests shall be made after identification tags and sleeves have been installed. Continuity tests shall also be performed on the shield. The insulation of each individual cable conductor shall be tested with respect to all other conductors, the shielding, and to an earth reference. The overall covering (or jacket) insulation shall be tested to the shielding and to an earth reference. For cables with 600-V insulation, the megohm test voltage shall be 1,000 V dc. Each test shall last until the megohmmeter reading is stable. Megohm values less than the manufacturer's supplied test values shall be considered a failure. The Contractor shall seal and make waterproof both ends of all cables after the cable has passed testing. The COR may allow members of the Contractor's staff, other than the CTP, to perform continuity and megohmmeter tests after submission of a record of experience.

(8) High-Voltage Cable Testing: All high-voltage cable, whether supplied by the Contractor or by Western, shall be tested by the CTP as per ANSI/IEEE Standard 400-2001 (IEEE Guide for Field Testing and Evaluation of the Insulation of Shielding Power Cable Systems) and ANSI/IEEE Standard 48-1996 (R2003) (IEEE Standard Test Procedures and Requirements for Alternating-Current Cable Terminations 2.5kV Through 765kV), both as amended. For cable supplied by Western, the CTP shall perform all tests as described in this section before any such cable is installed. For Western or Contractor-supplied cable, the CTP shall perform post-installation tests as described in this section only after all cable is in its final resting place, any specified planking or other equipment has been placed, all splices have been made, and all cable terminations have been installed. The CTP shall guard all exposed cable ends during high-voltage testing.

When equipment, such as transformers, motors, etc., is connected to the cable circuit undergoing test, voltages lower than the recommended values may be used to comply with the limitations imposed by the connected equipment.

The testing shall be performed in the following order:

1) A megohmmeter test of the cable insulation.

2) Apply the total test voltage in at least five equal steps. After 5 minutes, the leakage current at each step is recorded and plotted on a voltage vs. current graph. If this curve becomes non-linear, breakdown of the insulating system is possible and the COR shall be consulted.

3) When the full test voltage is achieved, this voltage shall be retained for 15 minutes and the leakage current shall be recorded every minute. This information shall be plotted on a current vs. time graph.

At the completion of any phase of testing, the CTP shall not short the energized cable to ground. The cable shall be discharged through the test set or through an insulated hot-stick-operated resistor. After discharge, the cable shall be solidly grounded for a period of at least twice the length of the test period.

(9) Instrument Transformers:

1) General: Upon receipt of all potential transformers, capacitor voltage transformers, coupling capacitor voltage transformers, and current transformers, the CTP shall perform tests as specified in the following paragraphs. All tests hall be conducted in accordance with the most current revision of ANSI/IEEE C57.13 and C57.13.1. The Contractor shall test all bushing current transformers as specified in the following paragraphs. On power circuit breakers or power transformers supplied by Western, bushing current transformers shall be tested after the equipment is assembled but before the equipment is filled with its final dielectric.

2) Current Transformers:

a. Polarity and Phase Angle: The CTP shall determine correct CT polarity and primary to secondary phase angle by the dc voltage impulse method (so-called “kicking”) and/or the primary to secondary current phase angle relationship method. The CT shall be demagnetized prior to energization.

b. Ratio: The CTP shall determine CT ratios (including all tap ratios on the primary or secondary) by the current injection method or the voltage application method.

c. Excitation/Saturation: The CTP shall verify the accuracy class of CT’s by the voltage application method. At least five points on the manufacturer’s saturation curve shall be checked. The highest applied voltage shall be sufficient to completely saturate the CT core on full ratio. Following saturation, the voltage shall be lowered gradually and evenly to demagnetize the core.

d. Megohmmeter Tests: The CTP shall perform megohmmeter tests and verify single-point grounding on all CT secondary circuits as specified under control, Metering, and Relaying (CMR) Equipment Tests.

3) Voltage Transformers and Coupling Capacitor Voltage Transformers:

a. Polarity and Phase Angle: The CTP shall determine correct VT polarity and phase angle by the dc voltage impulse method or the primary to secondary voltage phase angle relationship method.

b. Ratio: The CTP shall determine VT ratios by the voltage application method or a turns ratio test. The ratio of CCVT’s shall be verified by application of a voltage of between 5,000 and 10,000 V ac to the primary. The secondary of the CCVT shall be compared with a Contractor-supplied 1.0 or 0.3 percent accuracy wound PT.

(10) Control, Metering, and Relaying (CMR) Equipment Tests:

1) General: The CTP shall perform work to verify that Western-supplied CMR equipment is wired as shown on the Government-furnished wiring diagrams.

The CTP shall use a dc ohmmeter and Government-furnished schematic and wiring diagrams to verify the proper wiring of all CMR equipment. These checks shall be performed before any power is applied.

Western will supply one complete set of schematic drawings and equipment wiring diagrams which will be designated as the “Master Set”. The CTP shall draw translucent yellow lines through indicated electrical connections on the schematic and wiring diagrams indicating that each electrical connection has been verified. The yellow lines shall be drawn with a marking device that is translucent to copying by photostatic copying. This master set shall not be removed from the substation.

2) Single-Point Grounding: All current and potential circuits shall be grounded at a single point. Testing for single-point grounding shall be accomplished by lifting the ground and megohmmeter testing at 500 V dc to ensure no other ground connection is present. The CTP shall ensure that no solid state equipment is damaged.

3) DC Control Circuits: Prior to energization from the substation dc system, each device on dc circuits shall be tested for proper connection according to schematic diagrams. These tests shall include checks to insure that connections to ground do not exist and tests for proper voltage magnitude and polarity.

4) Current Circuits: A secondary current of approximately 1 amp shall be injected at each CT secondary connection point. Each device in the current circuit shall be tested for proper current magnitude and direction (polarity) referenced to the injection current. In addition to the above test, the impedance of each complete secondary circuit shall be measured with 5 amps of injected current. The equipment used may include a variable current source, ac ammeter, and phase angle meter. Also, all shorting devices (i.e., test switches, relay cases, etc.) shall be checked for proper operation.

5) Voltage Circuits: A secondary voltage of 69 or 120 V ac, as applicable, shall be applied at the VT secondary connection point. The VT shall not be back fed. Each device on the voltage circuit shall be tested for proper voltage magnitude and direction referenced to the applied voltage. The equipment used may include a variable voltage source, voltmeter, and phase angle meter.

(11) Station Service Equipment: Station service equipment includes switchgear assemblies, switchboards, panelboards, transfer switches, and safety switches. Station service equipment shall be tested per these specifications covering voltage circuits, current circuits, dc circuits, and operational tests. The main bus shall be tested for insulation dielectric strength with at least 2,500 V dc for a minimum of 15 minutes on each phase and neutral. Proper connections between neutral and ground shall be verified.

(12) Testing of Protective Relays: Western will test all protective relays, transducers, panel instruments, and revenue meter equipment. The COR will coordinate such testing with the Contractor’s approved construction schedule.

(13) Operational Tests: After satisfactory completion of all other tests the CTP and the Western representative shall operationally check the control and protection systems of the installation. After each operational check, the CTP shall date and initial the appropriate electrical connections shown on the appropriate “Master Set” schematic drawing. Tests shall include:

1) Walk-around inspection of installation, including inspection of all major equipment.

2) Tripping and closing power circuit breakers using each protective device and each control device.

3) Causing annunciation or remote SCADA indication for every alarm condition.

4) Opening and closing motor-operated disconnect switches and motor-operated interrupter switches using each protective device and each control device.

5) Functional check of every dc circuit. During this period, the Contractor shall process the checkout, and make any wiring changes which are necessary for proper and adequate functioning of the installation. Any wiring or design errors in Government-furnished equipment discovered by the CTP during the wiring check shall be reported to the COR. The Contractor shall replace all wiring, instruments, and equipment which are damaged in the checkout process, unless this damage results from negligence by Western as determined by the COR.

(14) Energization Tests: After satisfactory completion of the operational tests listed above, Western will energize and load the installation. Western will check for proper current and voltage magnitude and phase angles at every protective and metering device associated with the energized portion of the installation.

(15) Infrared Inspection: After any new or modified section of the high-voltage buswork or equipment is energized and loaded to normal operating levels for at least a period of 48 hours, the CTP shall perform an infrared inspection. The infrared equipment used shall be capable of detecting a temperature difference of 2°F and shall produce a video tape record recorded on 1/2-inch VHS format video tape. This record shall be forwarded to the COR for review within 48 hours. If the COR determines that the records show an existing or potential problem, the Contractor shall repair this problem unless the problem exists on Government-furnished equipment and the COR determines that the problem shown was not the fault of the Contractor.

9.1.3 ELECTRICAL DRAWINGS AND DATA:

1. GENERAL: Drawings and technical data required to be furnished by the Contractor shall be in English, with dimensions in feet and inches, weight in pounds, and volume in cubic feet or cubic inches.

   The drawings and data shall be complete and accurate in their content. Originals and copies shall be legible. Drawings shall be prepared using drafting equipment, shall be drawn to scale, and shall have neat lettering. Freehand sketches will not be accepted. Western will require 40 calendar days to answer correspondence pertaining to each submittal of data or drawings.

   Schematic and wiring diagrams shall have graphical symbols and device function numbers conforming with the latest applicable standards of ANSI Y32.2/IEEE 315, ANSI/IEEE 315A, and ANSI C37.2.

   Reproducible prints shall be of such quality as to permit clear, sharp, legible prints or other reproductions to be made by direct contact methods.

   Western shall have the right to require the Contractor to make any changes in the drawings and data that may be necessary to show the equipment furnished conforms to the requirements of the specifications and these standards. The design and coordination of this electrical equipment shall be the responsibility of the Contractor and Western assumes no responsibility to approve or review drawings and data that are submitted. Western's review of the Contractor's drawings shall not relieve the Contractor of meeting all requirements of these specifications or for the correctness of his drawings. Revised drawings shall show revision dates with changes and revisions circled on the drawings.

   Table 9-1 summarizes the drawing and data required for electrical equipment being furnished.

TABLE 9-1

ELECTRICAL DRAWINGS AND DATA SCHEDULE

TYPE OF DRAWINGS AND DATA	9.1.3 PARA.	DELIVERY TIME	TYPE OF MATERIAL	QTY TO ELECTRICAL ENGINEER	QTY TO COR	QTY WITH EQUIPMENT
Equipment installation including seismic qualification report	2.	60 days after notice to proceed	Blackline Prints/Data	3	–	–
Equipment informational drawings and data	3.	60 days after notice to proceed	Blackline Prints/Data	3	–	–
Equipment final drawings	4.(1)	21 days before start of construction or installation of subject equipment	Bond Drawing Prints	1	–	–
Equipment parts identification lists and bills of materials	4.(2)	21 days before start of construction or installation of subject equipment	Lists	1	†4	1
*Manufacturer's operation and maintenance instructions	4.(3)	21 days before start of construction or installation of subject equipment	Books	1	†4	1
Equipment and oil test reports	5.	Prior to shipment of equipment	Certified Data	1	†4	1
Equipment insulating Liquid PCB certification	6.	Prior to delivery of oil or equipment	Certified Data	1	†4	1
Insulated conductor data	7.	Within 60 days after notice to proceed	Certified Data	2	–	–
Revised wiring diagrams	9.	60 days after receipt of drawings	Marked Print	3	–	–
Contractor's "as-built" drawings	10.(1)	Within 60 days after final checkout of electrical installation	Bond Drawing Prints	1	1	–
As-Built Western drawings	10.(2)	Within 60 days after final checkout of electrical installation	Marked Print	–	1	–

* Furnish one print of each final drawings with each copy of instructions.

† One for main construction office, one for maintenance crew's office, one for construction Contractor, and one for the COR's construction inspector.

2. EQUIPMENT INSTALLATION DRAWINGS AND DATA: Installation drawings and data are required for preparing installation drawings for foundations and for equipment support structures if Government furnished. The required quantity, delivery time, and destination are listed in Table 9-1. Drawings and data required include those in the following list that are applicable:

   (1) Equipment or equipment and associated support outlines, dimensions, and weights.

   (2) Base type, dimensions, and mounting details.

   (3) Location, types, sizes, and projections of required embedded anchor bolts.

   (4) Location and size of required openings in the floors for conduits.

   (5) Impact loading for the oil-type circuit breaker.

   (6) Orientation of all equipment and a complete anchor bolt setting plan.

   (7) Size and location of jacking pads for transformer.

(8) Pole spacing for circuit breaker.

(9) Overall equipment cabinet dimensions, including height above equipment base.

(10) Seismic qualification report, for equipment specifications requiring a seismic qualification report.

3. EQUIPMENT INFORMATIONAL DRAWINGS AND DATA: The Contractor shall furnish informational drawings and data for electrical equipment supplied by the Contractor. The required quantities, delivery time, and destinations are listed in Table 9-1.

   The drawings and data shall include equipment outlines, details, schematic diagrams, wiring diagrams, and instructions. The drawings and data shall specifically verify conformance with equipment requirements and shall be sufficiently complete to allow preparation of final installation drawings including wiring diagrams.

4. EQUIPMENT FINAL DRAWINGS AND DATA: At least 21 days before the date the Contractor begins to install or make any external connections to any Contractor-furnished equipment, he shall furnish to the destinations listed in Table 9-1, the final drawings and data required in the following subparagraphs.

   (1) Final Drawings for Equipment: The drawings shall show changes, and revision dates therefor, made up to the time the drawings and data are furnished. Final drawings shall be furnished, rolled or flat, not folded. Drawings shall be printed on quality bond paper; be full-size; and be clear, sharp, and legible. Final drawings shall include all of the following that are applicable for equipment furnished by the Contractor.

      1) Outlines and details of equipment and equipment components such as supports, surge arresters, and bushings.

      2) Wiring and schematic diagrams.

      3) Control cabinet physical layout drawings, (showing the layout of components in the cabinets).

      4) Nameplate drawings or data sheets.

   (2) Sets of Parts Identification Lists or Bills of Materials: Each part shall be assigned an identifying number which can be used for ordering replacements, and a reference number that locates the part on the appropriate outline drawing.

   (3) Sets of manufacturer's instructions covering installation, operation, and maintenance repair for electrical equipment and for each device appurtenant to the equipment. A print of each final drawing as required above shall be included with instructions.

5. EQUIPMENT TEST REPORTS: After completion of required tests on the electrical equipment and prior to shipment of equipment, the Contractor shall furnish certified copies of test reports, performance curves, and data. Copies of oscillograms shall be furnished as clear positive film transparencies. Any equipment that does not successfully pass the testing requirements will be rejected.

6. EQUIPMENT INSULATING LIQUID PCB CERTIFICATION: Certification shall be furnished showing that insulating liquids used in equipment do not contain polychlorinated biphenyls.

7. INSULATED CONDUCTOR DATA: The Contractor shall furnish quantity, manufacturer's data that completely identify all insulated wire and cable to be furnished. The required delivery time and destination are listed in Table 9-1.

The Contractor shall also submit, for approval, copies of cable manufacturer's certified data for all control cable with sufficient detail to allow Western to verify the following specifications for the cable.

(1) Type/class and gauge of copper used for conductors;

(2) Type of material, thickness, voltage rating, temperature rating, and NEC Type of individual conductor insulation;

(3) Individual conductor color coating;

(4) Type of material, thickness, and temperature rating of binder tape or jacket covering;

(5) Type of material, thickness, overlap (if applicable), and minimum coverage percentage (if applicable) of the protective metal shield; and

(6) Type of material and thickness of overall cable covering (jacket).

Data submitted for shielded cable, other than Type RG-8A/U, shall include manufacturer's certification that cable conforms to requirements of these specifications and give the number of groups, number of wires per group, and size of wires used to meet the 14,472-circular mil area requirement for braid-type shielding or the dimensions and details of other type permitted. Data submitted for Type RG-8A/U shall include manufacturer's certification that the Type RG-84/U cable conforms to the requirements of Military Specification MIL-C-17.

8. RIGHT TO USE THE CONTRACTOR'S DRAWINGS: Western reserves the right to use, reproduce in whole or in part, to distribute, and to reuse any and all such drawings, whether copyrighted or not, in connection with the following:

(1) Installation, maintenance, replacement, and repair of the articles to be furnished under the specifications and these standards.

(2) Making any and all such drawings and reproductions thereof available to subsequent bidders and the Contractors, where necessary for fabricating and furnishing articles connected with or dependent upon, information shown on the drawings and duplicating the drawings to be furnished hereunder.

The depositing of all such drawings with Western shall constitute a license to Western to use said drawings in the manner hereinabove stated.

9. REVISED WIRING DIAGRAMS: The Contractor shall furnish three marked prints, for approval, of wiring diagrams or cable routing list showing the Contractor proposed changes. These changes shall be furnished 60 days after receipt of Government-furnished drawings in accordance with the Standard 1 – General Requirements, Section 1.2.1 "Government-Furnished Material".

10. "AS-BUILT" DRAWINGS: Within 60 days after final checkout of electrical installation, the Contractor shall furnish the following "as-built" electrical drawings in accordance with Table 9-1:

(1) Contractor's "As-Built" Equipment Drawings: The Contractor shall revise all equipment drawings and data which do not agree with "as-built" equipment or are otherwise deficient.

(2) As-Built Western Drawings: One full-size print of specifications drawings furnished to the Contractor for "as-built" construction purposes shall be marked to show any changes and additions made during construction and to show outlines of the equipment actually furnished. The marked prints shall be returned to the COR so that the revisions can be transferred to the original drawings.

9.1.4 INSULATING OIL:

1. GENERAL: Electrical equipment shall be designed to operate with oil which conforms to the requirements of ANSI/ASTM D 3487, "Standard Specification for Mineral Insulating Oil Used in Electrical Apparatus", except that the maximum pour point temperature shall be reduced when specified and that for oil-filled instrument transformers, distribution transformers and bushings the manufacturer's standard insulating oil is acceptable.

   Electrical equipment with insulating liquids containing polychlorinated biphenyls (PCB) is not acceptable. Equipment requiring insulating oil shall be permanently marked and certification furnished to the COR to certify that there are no PCB's present when the equipment is manufactured. If the oil is shipped separately, the Contractor shall also furnish certification that the oil does not contain PCB's when delivered to Western. The oil truck driver shall have in his possession and furnish this certification to Western upon arrival at the delivery site.

2. SAMPLING AND TESTING: Certified results of tests which demonstrate compliance with ANSI/ASTM D 3487 and these standards shall be furnished. Results of tests shall be of the actual oil being furnished or results of tests of a sample representative of oil being furnished are acceptable.

   Unless otherwise specified, the Contractor shall test a sample of the oil from the equipment or, directly from the shipping container, at Western's receiving facility to demonstrate that the following requirement is met:

TYPE OF TEST	ASTM Method	Test Limit
Dielectric Strength	D 877	26 kV minimum

   Insulating oil, after it is placed in the equipment, or if it is shipped in the equipment, will be tested by Western and if it does not exceed a dielectric strength of 30,000 V in accordance with ASTM D 1816 (0.040 in. gap), the Contractor shall filter the oil until its dielectric strength does exceed 30,000 V.

3. INSTALLATION: The Contractor shall process the insulating oil as required for the oil-filled electrical equipment to be installed under these specifications. Unless otherwise specified, the Contractor shall provide the filtering equipment. Separately shipped insulating oil shall be filtered at least once before it is placed in the equipment.

   For power transformers, regulators and reactors rated 230 kV and above, unless otherwise specified, the Contractor shall provide for the following as part of processing the oil:

   (1) Purification unit having a capacity of at least 1,000 gallons per hour and a capability of obtaining an absolute pressure of 5 millimeters or less of mercury.

   (2) Oil storage equipment.

   (3) The electrical power for operating the purification unit.

   (4) A gas analyzer and any other special equipment if required by the manufacturer of the oil-filled equipment.

   The Contractor shall furnish all necessary material and labor to complete the electrical and oil supply connections to the purification equipment and shall furnish operators for the unit while it is in use.

The filling of the equipment shall be conducted in accordance with the manufacturer's instruction books and the purification unit instruction book, and under the supervision of the manufacturer's erection engineer.

The Contractor shall make every reasonable effort to operate the processing equipment in such a manner so that after one pass of the oil through the processing equipment the dielectric strength of the oil is not less than 30 kV when tested in accordance with ASTM D 1816 (0.040 in gap). If after passing through the processing equipment the dielectric strength of the oil is less than 30 kV, the Contractor shall reprocess the oil until it reaches a dielectric strength of not less than 30 kV.

SECTION 9.2--GROUNDING, CONDUIT, AND LOW-VOLTAGE CABLE SYSTEMS

9.2.1 GROUNDING SYSTEM:

1. MATERIAL:

(1) Ground Cables: Copper ground cables, No. 2/0 AWG and larger, shall be annealed bare-copper cable, concentric stranded, and in accordance with ASTM B 8, Class B. No. 6 AWG copper ground cable used for trench cover grounding shall be annealed, concentric stranded, bare or insulated cable in accordance with ASTM B 8, Class C. No additional payment will be made for furnishing and installing insulated cable.

Copper-covered steel ground cable shall be dead-soft annealed, 40-percent conductivity, and in accordance with ASTM B 228 where applicable.

(2) Cable Fittings, Lugs, and Connectors: Cable fittings shall be welded-, powder actuated-, or bolted-solderless-type and shall have current-carrying capacity equal to that of the cable with which they are used. Cable fittings, lugs, and connectors, together with the bolts, nuts, and washers used therewith for copper ground cables, shall be of copper alloy, containing not more than 4-percent zinc. Aluminum connectors shall be used to connect aluminum-to-aluminum and tinned-bronzed connectors shall be used to make aluminum-to-copper connections.

(3) Ground Rods: Each ground rod shall have a copper jacketed steel core with 3/4-inch nominal diameter and be in conformance with UL Bulletin 467 (ANSI C33.8). Twenty-foot-long ground rods shall consist of two 10-foot sectional rods joined and bonded by threaded couplings of high strength copper alloy.

(4) Grounding Connectors for Underground and Embedded in Concrete: Exothermic grounding connections shall be made with Cadweld, Thermoweld, Tectoweld, or an equivalent process. Connectors shall be a heavy-duty type, made of new material from fresh stock. Molds and weld material shall be by the same manufacturer. Swaged connectors (DMC GroundLok or equal) or compression connectors (Burndy HyGround or equal) are also acceptable.

2. INSTALLATION:

(1) Ground Mat: The ground mat shall be installed at a depth of not less than 18 inches below the established elevation of the subgrade, except where solid rock is encountered, the depth of burial may be reduced to 6 inches.

(2) Excavation and Placing and Compacting Backfill: Excavation, and placing and compacting backfill shall be in accordance with Standard 2 – Sitework.

(3) Driven Ground Rods: Ground rods shall be driven vertically the full length of the rod until the top is at least 14 inches below established elevation of the subgrade. When solid rock is encountered, ground rods shall be grouted into vertical holes of such depth that the top of the rod will be 14 inches below established elevation of subgrade. The diameter of holes shall be at least 1 1/2 times the diameter of the ground rod.

(4) Connections: Electrical equipment, steel structures, pull box covers, corrugated metal pipe (CMP), and exposed metal surfaces shall be connected to the grounding system with the proper size copper conductor as shown on the drawings or as directed. Grounding connections to trench covers, manhole covers, and pull box covers shall be made with bolted connectors. Grounding of metal structures shall be in accordance with drawing 31 1060. Connections above ground to tubular metal structures shall be made by connecting the ground wire to the baseplates of the metal structures and shall be in accordance with drawing 31 1060. Each gate shall be bonded to its supporting fence post that is connected to the ground grid.

Grounding of electrical equipment mounted on pedestal-type concrete foundations shall be accomplished by connecting the ground wire directly to the ground mat and the equipment. Ground wire shall be connected to electrical equipment by cable with a flat plate connector similar to Burndy Type QA-B or as approved by the COR.

Paint, scale, or other foreign material shall be removed from the point of contact on metal surfaces before any ground connections are made. After connections are made, any paint or galvanizing on the metal finishes that has been damaged or removed as a result of connections being made shall be repaired in accordance with the "Painting" Standard.

(5) Ground wire risers to equipment mounted on supports shall be fastened above the baseplate at intervals not to exceed 5 feet and in accordance with drawing 31 1077.

1) Cable risers shall be secured to tubular metal supports by one of the following methods:

a. Ground connectors, similar to Burndy Type GBM, shall be bolted securely to a threaded 3/8-inch stud fastener attached to structure by powder-actuated tools as manufactured by Ramset Fastening Systems, Remington Arms Company, Inc., or by Hilti, Inc.

b. Approved grounding-type clamps shall be secured to studbolts that shall be welded on the supports. Studbolts shall be standard commercial quality, shall be flux-filled for end- welding with automatic end-welding guns, and shall be field installed. Sizes and edge-distance locations of the studbolts shall be subject to the approval of the COR.

2) Cable riser shall be secured to concrete supports by a method similar to that described in b. above or by approved grounding-type clamps secured to threaded 3/8-inch stud fasteners attached to the concrete structure with a wedge or expanding type anchor.

(6) Exothermic Welded Grounding Connectors: Connectors shall be installed and performed with heavy-duty welding equipment in accordance with the manufacturer's instructions.

(7) Cable Trench Grounding: Cable trench grounding shall be in accordance with drawing 31 1061. Two No. 2/0 AWG copper ground cables shall be installed throughout the entire length of each cable trench. Each time the trench crosses a copper main ground mat cable connections between the ground cables in the trench and the substation ground mat shall be made with No. 4/0 AWG copper cable.

1) Metallic Covers: Grounding of trench covers shall be in accordance with drawing 31 1061 and the following instructions. Each trench cover shall be connected to one of the No. 2/0 AWG copper ground cables with a No. 6 AWG copper jumper cable. The connector shall ensure that each No. 6 AWG copper jumper cable, connecting the trench covers to the No. 2/0 AWG ground cables, will be of sufficient length to permit removal of the trench covers without disconnecting the jumper cable. Copper-to-aluminum cable connection shall be made with tinned-bronze connectors. Oxide-inhibiting paste shall be applied, the aluminum surfaces wire brushed through the paste, and additional paste applied, if necessary, to cover contact area. Paste remaining after the connectors are tightened shall be retained as a seal against moisture. If No. 6 AWG insulated copper cable is furnished and installed in accordance with 1.(1), the insulation shall be stripped back at least 12 inches prior to making connection.

2) Non-metallic Covers: Connecting non-metallic covers to the grounding system is not required. When non-metallic covers are used, support the two No. 2/0 AWG copper ground cables, one on each of the inside trench walls just underneath the covers, by brackets or clips.

(8) Grounding Cable for Transient Voltage Protection of Control and Power Circuits Other Than Lighting Circuits: Grounding cables shall be provided for transient voltage protection of control and power circuits other than lighting circuits for 230-kV yards with capacitor banks and all 345-kV, and above, yards. Grounding cables for transient voltage protection shall be No. 4/0 AWG bare copper cable. Such grounding cables shall be run parallel with and bundled to each group of individual cables buried in earth, run in conduit, or exposed. The grounding cable shall be grounded at each end.

Where grounding cable is run in steel conduit with power or control cable, a grounding shunt path with resistance equal to or less than No. 4/0 AWG copper equivalent shall be provided to shunt ground currents around and completely outside the steel conduit runs. The shunt is needed as the low impedance path of a ground cable, inside the magnetic steel walls of the conduit, is impaired for steep rise surges.

Cable runs in trenches are protected by the grounding cables in the trenches.

(9) Service-Building Grounding: The building ground mat or metal frame shall be connected to the substation ground system as shown on the drawings. All metallic equipment in the building and all metal roof joists, metal fascia, metallic door and window frames, exposed metal surfaces, metallic conduits, and shielded cables shall be connected to the building ground mat or metal frame using No. 4 AWG bare stranded conductor or by effective grounding through mechanical connection to the grounded metal frame of the building.

(10) Pull Box Grounding: A copper ground cable shall be installed from the station ground mat into each pullbox. The copper conductor shall be sized as shown on the drawings or as directed. Metal parts within and on the pullbox shall be connected to the pull box grounding with 4/0 AWG copper cable. Provide sufficient cable to permit removal of cover without disconnecting the cable.

(11) Equipment Grounding: The Contractor shall make all ground connections between all grounding pads and the grounding system whether or not such grounding connections are shown on the grounding drawings. The number of grounding terminals for each piece of equipment may be one, two, or more in some cases.

(12) Operating Mechanism Bonding (Group-Operated Switches and Equipment Cabinet Platforms): The Contractor shall bond operating mechanisms of group-operated switches to switch operating platforms and Equipment Cabinet Platforms as shown on drawing 31 1075. Where double platforms are used, they shall be electrically bonded together.

(13) Damaged Ground Cable: Existing ground cables shown on the drawings are shown in approximate locations, and caution shall be used in excavating near the existing ground cables. The Contractor shall repair ground cables damaged during construction to the satisfaction of the COR at no additional cost to Western.

3. TESTS: When specified, thirty days after completion of the grounding system installation, or as soon as possible thereafter, the resistance of the grounding system to ground shall be measured by the Contractor using:

(1) The fall-of-potential method described in IEEE Std. 80, using a Megger Ground Tester of the heavy-duty, low-resistance type with direct-reading, dc ohmmeter as described in Bulletin No. 25 and any one of Bulletins No. 25J, 25J-2, and 25T, all by James G. Biddle Company; or

(2) Other method approved by the COR.

The Contractor shall conduct the ground resistance tests near each corner of the substation fence. At least three tests shall be made at each corner by relocating either the potential or current test probe.

The test probe shall be connected to a ground cable riser near the fence corner. The potential and current test probes shall be connected to ground rods driven to a depth of 8 to 10 feet in order to reach permanent moisture or a more highly conductive earth stratum. If the average of the three ground-to-earth resistance values obtained is 1 ohm or greater, the Contractor shall repeat the test and use one or all of the following methods in order to obtain a better earth-to-probe contact:

1) Drive rods to a greater depth in an effort to reach permanent moisture or a more highly conductive stratum.

2) Wet the earth immediately surrounding the electrodes. Remove a few inches of earth at the surface around the electrodes so that water will not run away. Use salt solution if necessary.

3) Drive a number of rods at not less than 5 to 10 feet apart and connect them together.

The Contractor shall notify Western, in writing, at least 72 hours in advance of the time the tests are to be made in order that tests may be witnessed by a representative of Western.

Three copies of the test reports of the results of ground tests shall be forwarded to the Electrical Engineer within 15 days after the tests are completed.

9.2.2 ELECTRICAL CONDUIT SYSTEM:

1. GENERAL: The electrical conduit system includes the embedded and exposed conduit systems.

   Conduit accessories include conduit fittings, bushed elbows, nipples, chase nipples, connectors, reducers, outlet bodies, outlet body extensions, steel boxes, caps, pipe plugs, locknuts, bondnuts, bushings, pull boxes, junction boxes, junction box extensions, sealing varnish, threaded joint compound, expansion couplings, liquid-tight conduit fittings, material for sealing ends of conduits terminating at outdoor equipment, and other incidentals required to complete the conduit systems, and to fasten, clamp, attach, and support conduit in place.

2. MATERIAL: Material for the electrical conduit installations shall conform to the following:

   (1) Rigid Steel Conduit, Zinc Coated: UL 514 and ANSI C80.1.

   (2) Rigid Metal Conduit: ANSI C80.5

   (3) Electrical Plastic Conduit and Fittings: Schedule No. 40 or 80 as specified, PVC, in accordance with NEMA Publications No. TC2 and TC3.

   (4) Flexible Metal Conduit: Federal Specification DLA A-A-55810 for indoor use only. For outdoor use, liquid-tight type flexible metal conduit shall be used.

   (5) Metal Conduit Fittings: Federal Specifications DLA A-A-50552 and DLA A-A-50553.

   (6) Plastic-Coated Conduit: Plastic-coated conduit shall be rigid steel conduit, zinc coated, with a factory-applied bonded plastic compound protective coat at least 0.04-inch-thick, placed uniformly around the conduit, and equal to Occidental Coating Co.; Plastic Applicators; Republic Steel GALVANITE; or Robroy Industries PLASTI-BOND. Fittings shall have an equal bonded coating and shall be sleeved to provide a watertight joint.

   (7) Protective Varnish: Protective varnish shall be General Electric Company, "Glyptal" No. 1201-B; Minnesota Mining and Manufacturing Co., "Scotchkote"; or Westinghouse Electric Corp., No. B-6-614; or equal.

(8) Outlet Bodies: Federal Specification DLA A-A-50563 and equal to Crouse-Hinds Company, or Appleton Electric Company, outlet bodies.

(9) Junction Box, Junction Box Extension, and Junction Box Cover (Steel, Cadmium, or Zinc Coated): Federal Specification DLA A-A-59214.

(10) Octagon Concrete Rings and Plates: Octagon concrete rings and plates shall be Appleton Electric Company, Types OCR and CCP; or equal.

(11) Expansion Couplings: Expansion couplings, where required for installation in conduit systems at expansion and contraction joints, shall be zinc coated and a watertight type. For 2-inch and smaller metal conduit, couplings shall be equal to Dresser Manufacturing Company's Type 38. Expansion couplings for plastic conduit shall be equal to Carlon Electrical Products "PV-Duit" fittings.

(12) Embedded Sheet Steel Pull Boxes: Embedded sheet steel pull and junction boxes, where indicated on drawings to be furnished, shall be not less than 10-gage, shall be thoroughly cleaned, and shall have a primer coat of red vinyl-resin paint and a final coat of gray vinyl-resin paint.

(13) Pull Boxes Embedded in Masonry Walls: Pull boxes embedded in masonry walls shall be equal to Russell and Stoll Catalog No. AB100A. Each box shall be furnished with a temporary cover to exclude the entry of foreign material.

(14) Fabricated Sheet Steel Boxes and Cabinets: Large junction and conduit boxes, excluding outlet boxes to contain wiring devices or to accommodate lighting fixtures, shall be fabricated galvanized finish. Covers shall be attached to boxes with bronze, brass, or stainless steel screws or bolts. Any installed boxes exposed to the weather shall be of weather-resistant, watertight construction, and covers for such boxes shall be provided with gaskets.

(15) Sealing Material: Sealing material for sealing the ends of conduits terminating at boxes or panelboards shall be equal to "Duxseal" as manufactured by Johns-Manville or "Isofoam PE-2" as manufactured by Isocyanate Products, Inc.

(16) Concrete Cable Splice Boxes: Cable splice boxes shall be equal to Brooks Products, Inc., No. 67T body with a bolt-down steel cover.

(17) Adhesive: Adhesive for joining plastic conduit shall be in accordance with the conduit manufacturer's recommendations.

3. INSTALLATION: Install conduits and make conduit connections to equipment. Perform excavation work and backfill in accordance with Standard 2 - Sitework. Conduit shall be installed complete with necessary fittings and supports, and bends shall be gradual and smooth to permit the pulling of insulated electrical wires and cables without undue stress or damage to the insulated electrical wires and cable sheath, or to the conduit. Conduit runs and bends shall be entirely free from kinks, indentations, or flattened surfaces. Unless otherwise indicated, metal conduit bends made in the field shall be bent cold to prevent damage to the protective coating and have not less than the minimum radii specified in the “National Electrical Code”.

No factory bends shall be used except when permitted by the COR. Burrs and sharp corners at the ends of each piece of metal conduit shall be removed. All 90 degree conduit bends shall be metal.

Male threads of rigid metal conduit joints shall be cleaned and coated with a suitable graphite or zinc sealing material before making joints and shall be tightened securely to prevent the entrance of moisture or any other foreign material.

For steel conduit, the completed joints, terminations, wrench marks, and all other places where the zinc covering is damaged shall be completely covered with a protective varnish to provide protection from corrosion. Joints in embedded nonmetallic conduit shall be tightened securely and permanently sealed to prevent the entrance of any foreign material.

Bushings and chase nipples, or bell ends shall be installed on the ends of conduit to protect the insulation or sheath of the wires or cables from abrasion. Locknuts and bondnuts shall be installed on metal conduit to provide tight ground connections between conduit and boxes, panelboards, and cabinets.

Unless otherwise specified or directed, conduits are to be terminated with a coupling or adapter flush with finished concrete surface.

Open ends of conduit shall be closed with plugs or capped bushings during construction.

Ends of conduits, including spare conduits, terminating at outdoor boxes, panelboards, cabinets or open air shall be sealed with airtight and watertight mechanical duct plugs and accessories equal to those manufactured by Jackmoon USA Inc., or an approved sealing material. Sealing material shall be used only when the number or size of cables does not permit the use of duct plugs.

Unless otherwise directed, exposed conduit runs shall be straight and shall be parallel with each other and with the centerlines of structures where they are located. Unless otherwise specified or directed, exposed conduits shall be rigidly supported at intervals of not more than 5 feet. Installation of exposed conduit shall include, where required, the drilling of holes in bottom and top of enclosures or plates and in side of enclosures of control, station-service, and other electrical equipment. Exposed conduits shall be tightened securely and shall be supported rigidly in place, and connections to outdoor boxes shall be watertight.

Metal conduit extending into the earth shall be in accordance with drawing 31 1006.

At electrical equipment enclosures not equipped with threaded hubs, conduits shall be terminated in accordance with drawing 31 1700, unless otherwise noted.

Rigid steel conduit buried directly in earth shall be plastic-coated type. Joints shall be made with watertight fittings that shall be coated or covered in accordance with the manufacturer’s instructions and damaged portions of protective coat shall be repaired or covered in accordance with manufacturer's instructions.

Conduits rising to electrical equipment mounted on tubular metal structures shall be tightened securely and shall be supported rigidly in place by the use of approved conduit clamps, hex head nuts, and a threaded 3/8-inch stud attached to the structure in accordance with 31 1700 by one of the following methods:

(1) Threaded 3/8-inch stud fastener attached to the structure by powder-actuated tools as manufactured by Ramset Fastening Systems; by Remington Arms Company, Inc.; or by Hilti, Inc.

(2) Studbolts welded on supports shall be standard commercial quality, shall be flux-filled for end-welding with automatic end-welding guns, and shall be field installed. Sizes and edge-distance locations of the studbolts shall be subject to the approval of the COR.

Bending of plastic-coated conduit shall be made in accordance with manufacturer's recommendations. Where manufacturer warns of possible damage to conduit or plastic coating when bending larger sizes of plastic-coated conduit, factory bends shall be used.

In addition to above requirements, nonmetallic conduit shall be installed in accordance with the applicable requirements of NEMA Publication No. TC2 including Appendix A.

Buried electrical conduit shall have 1 inch of sand or fine earth around each conduit. The remaining portions of the trenches shall be backfilled and compacted as provided in the Standard 2 - Sitework.

Provide pull wires in all conduits.

9.2.3 INSULATED CONDUCTORS AND CABLES:

1. GENERAL: For the purposes of these standards the following definitions shall apply:

   (1) Cable: Cable, cables, wire, wires, or conductor.

   (2) Power Cable: Cable used for power loads, including receptacle outlets, motors, heating, ventilation, and lighting, and cable used for controlling heating, ventilation, and lighting equipment.

   (3) Control Cable: Cable used for control, alarm, metering, relaying, supervisory, annunciator, and Western identified low-current control circuits and circuits not identified as power circuits.

   (4) Telemetering Cable: Cable used for supervisory, computer control, voice communication, and logic level signals.

   (5) RTU Cable: Cable used for supervisory and data acquisition.

   (6) Yard: Substation areas, except building interiors.

   (7) Yard Cable: Cable with portion of its length located in yard.

   (8) Indoor Cable: Cable with its entire length indoor.

   (9) NEC: National Electrical Code ANSI 70.

   (10) NESC: National Electrical Safety Code, ANSI C2.

   (11) WC Plus a Specified Number: Wire and cable NEMA Publication having specified WC number.

   (12) ICEA: Insulated Cable Engineers Association.

2. MATERIAL:

   (1) General: All cable shall:

      1) Be in accordance with National Electrical Code (NEC), NEMA WC, and ICEA Publications as specified.

      2) Be furnished with a certification of date of manufacture. Cable that was manufactured more than 2 years prior to bid opening date is not acceptable.

      3) Be round, except for two-conductor cable with parallel conductors.

      4) Have Class B or Class C copper conductor.

      5) Have American Wire Gage designation.

      6) Have coverings or insulation suitable for installation in vertical position without injury to the covering or deformation of insulation when supported in accordance with NEC Article 300-19.

(2) Color Code for Indoor Lighting Cable: No. 10 AWG and smaller single-conductor cable used in branch circuits shall have colored or identified insulation as follows:

Phase A - black or orange
Phase B - red or yellow
Phase C - blue or brown
Neutral - white or gray

(3) Indoor power cable for circuits rated at 600 V or less shall be NEC Type XHHW or XHHW-2 shall be UL approved, and shall bear UL label "XHHW" (or XHHW-2, as applicable) on outer surface per NEC.

(4) For stations rated 138 kV and below with or without capacitor banks; also for stations rated 230 kV and below and having no capacitor banks, power cable for circuits rated at 600 V or less and installed in yard shall be:

1) Single conductor or multiconductor nonshielded type.

2) NEC 75°C Type RHW, THW, THHW, XHHW.

3) UL approved and bear UL type label on outer surface per NEC.

(5) For 161-kV and 230-kV stations with capacitor banks and all stations rated above 230 kV, power cable for circuits rated at 600 V or less and installed in yard shall be suitable for all uses and shall be as follows:

1) Multiconductor shielded type.

2) Insulation (600 V): Cross-linked-thermosetting Type per WC 70 (ICEA S-95-65B)-1999, Part 3, and meeting thickness and test requirements per WC 70, Table 3-4, Column B.

3) Shielding: Conforming to WC 70, Part 4, except that type shall be limited to the following:

Copper tape with a thickness of at least 5 mils and a minimum lap of 10 percent or copper braid consisting of 24 groups of 6 or 7 No. 30 AWG wires per group or the equivalent in total circular mil area and shall provide a minimum coverage of 85 percent. (Example, each No. 30 AWG wire has an area of 100.5 circular mils and 6 strands of wire in 24 groups to give a total area of 14,472 circular mils.)

4) Covering (Jacket): Thermoplastic or rubber Type per WC 70, Part 4, and thickness per WC 70, Table 4-4; or

(6) Multiconductor Control Cable: Unless otherwise indicated, cables for control, alarm, and relaying circuits, except control circuits for heating, ventilating, and lighting, shall be as follows:

1) 600 V insulated.

2) Multiconductor type suitable for installation in trays, direct burial, and general use.

3) Individual conductors insulated with NEC Type XHHW or XHHW-2 (NEMA WC57-2004 XLPE) insulation and color-coded in accordance with drawing 31 6005 (WC57-2004/ICEA S-73-532 Table E-1).

No. 10 AWG at least 30 mils (0.76 millimeter) thick.
No. 16 AWG at least 25 mils (0.63 millimeter) thick.

4) Binder tape or jacket covering.

5) A protective metal shield:

Corrugated longitudinal copper tape with a thickness of at least 5 mils and a minimum lap of 10 percent; or

Copper braid consisting of 24 groups of 6 or 7 No. 30 AWG wires per group or the equivalent in total circular mil area and shall provide a minimum coverage of 85 percent. (Example, each No. 30 AWG wire has an area of 100.5 circular mils and 6 strands of the wire in 24 groups to give a total area of 14,472 circular mils.)

6) An overall covering (jacket) of thermoplastic or neoprene:

Cable with No. 10 AWG individual conductors at least 60 mils (1.52 millimeters) thick, except 12-conductor cable shall be at least 80 mils (2.03 millimeters) thick.

Cable with No. 16 AWG individual conductors at least 45 mils (1.14 millimeters) thick, except 12-conductor cable shall be at least 60 mils (1.52 millimeters) thick.

(7) RTU Cable: RTU cable used for supervisory control and data acquisition (SCADA) shall be suitable for all uses and shall be as follows:

1) 600 V insulated.

2) Multiconductor or twisted pair suitable for installation in trays, ducts, and general use.

3) Conductor sizes shall be No. 14 and 18 AWG.

4) The core shall be completely covered with a layer of non-hygroscopic dielectric material. The covering shall be applied with an overlap.

5) Shielding: Cable shall be shielded and have a drain wire.

6) An overall covering (jacket) of thermoplastic or neoprene.

7) Twisted pair cable shall meet all requirements listed above. The core shall consist of twisted pairs, individually insulated, and with varying lengths to minimize crosstalk.

8) Color coding shall be as specification drawing 31 6005.

(8) Multiconductor Telemetering Cable: Multiconductor telemetering cable shall be suitable for all uses and shall be as follows:

1) The core shall consist of twisted pairs, individually insulated, and with varying lengths of lay to minimize crosstalk.

a. Insulation shall be extruded high-density polyethylene or crystalline propylene/ethylene copolymer insulating compound.

b. Insulation shall be color coded in accordance with RUS Bulletin 1753-205 (PE39).

2) The core shall be completely covered with a layer of non-hygroscopic dielectric material. The covering shall be applied with an overlap.

3) Shielding:

a. Standard Cable: 0.005-inch (0.127-mm) thick copper or 0.008-inch (0.203-mm) aluminum shield.

b. Direct Burial Cable: 0.006-inch (0.152-mm) copper-clad steel or 0.010-inch (0.245-mm) stainless steel aluminum laminated or copper shield. The shield shall be separated from the core by an inner jacket of hi-molecular weight polyethylene. The shield shall be placed between the inner-jacket and the outer cable jacket. The cable shall be rodent-proof.

4) Cable Jacket: The outer cable jacket shall be black high molecular weight polyethylene and be resistant to abrasion, moisture, weather, and environmental cracking.

(9) Power Cable Above 2,000 V: Power cable above 2,000-V rating shall be filled or unfilled cross-linked-thermosetting-polyethylene insulated type per NEMA Publication No. WC 7 or ethylene-propylene-rubber insulated type per NEMA Publication No. WC 74-2000 and be as follows:

1) Single-conductor shielded type with Class B or Class C stranded copper conductors.

2) Suitable for all uses including direct burial.

3) Insulation: Cross-linked-thermosetting-polyethylene type per WC 7, Part 3, and with thickness and tests per WC 7, Table 3-1, for 133-percent insulation level for 2,001 to 25,000 V and 100 percent insulation level for 25,001 to 35,000 V; or

Ethylene-propylene rubber per WC 74, Part 3, and with thickness and tests per WC 74-2000, Table 3-1, for 133 percent insulation level for 2,001 to 25,000 V and 100 percent insulation level for 25,001 to 35,000 V.

4) Shielding:

Per WC-74-2000 (ICEA S-93-639) Parts 5 and 6.

5) Covering (Jacket):

Rubber or thermoplastic Type per WC 74, Part 7, with thickness per WC 74, Table 7-3, for 133 percent insulation level for 2001 to 25,000 V and 100-percent insulation level for 25,001 to 35,000 V.

(10) Coaxial Cable: Coaxial cable shall be Type RG-213/U and in accordance with Military Specification MIL-C-17.

3. DETERMINATION OF CONDUCTOR SIZES: The Contractor shall determine conductor sizes, except where shown on the drawings or specified. Sizes shall be determined in accordance with NEC and the following requirements, provided that in the event of differences between NEC and the following requirements, the more stringent requirements shall apply:

(1) Minimum Conductor Sizes for 600-V Insulated Cables: All conductors shall be No. 10 AWG or larger except for the following:

Heating, ventilation, and lighting:

Power: No. 12 AWG or larger.
Control: No. 14 AWG or larger.

Annunciator and Western identified low-current control circuits:

No. 16 AWG or larger.

(2) Minimum Size of Buried Single Conductor: No. 8 AWG or larger.

(3) Conductor Sizes for Power and Lighting Circuits: The Contractor shall determine all conductor sizes in accordance with the NEC except where shown on the drawings or specified.

4. INSTALLATION:

(1) The Contractor shall not procure nor begin installation of any control cable until the manufacturer's certified data required by section 9.1.3 "Electrical Drawings and Data" is approved in writing by the Electrical Engineer.

(2) The Contractor shall install cables in accordance with the drawings and requirements of these Standards, NESC and NEC requirements where applicable. The Contractor shall complete the installation, including connecting to and extending existing circuits where required. No combination of ac and dc circuits or current transformer and potential transformer circuits shall be carried in the same multiconductor cable. Sufficient length shall be left at the ends of cable to make connections conveniently to equipment, fixtures, and devices. Spare single conductors at each end of a multiconductor cable shall be retained in a length equal to that of the longest single conductor of the multiconductor cable. All conductors in current transformer cable shall be retained in sufficient length to reach the farthest terminal used to select current transformer ratios. At termination of each multiconductor cable, the conductors shall be formed into neat packs and laced or tied. Circuits not installed in conduit and consisting of two or more single conductors shall be tied together at 10-foot intervals by self-locking cable ties.

The self-locking cable ties shall be equal to Thomas and Betts molded Zytel No. 101 nylon "TYRAP."

(3) Within fenced substation areas, buried cables shall be installed in accordance with drawing 31 1006. For other applications, buried cable shall be installed in accordance with NEC Article 300-5, for cables rated 600 V or less, and Article 710-3 for cables rated above 600 V.

(4) Excavation and placing and compacting backfill for buried cable shall be in accordance with the applicable paragraphs of Standard 2 - Sitework.

(5) Cable shall not be pulled into conduits until the conduit runs have been cleaned and are free from obstructions and sharp corners. A clean, dry, tight-fitting rag shall be drawn through the conduit immediately before installing insulated conductors. Cable shall be installed so that there will not be cuts or abrasions in the insulation or protective covering or kinks in cable.

(6) Gradual and uniform pulling stresses only will be permitted on cable. Where a lubricant is needed as an aid to the pulling of cable, only soapstone or other approved material not injurious to cable sheath shall be used. Any cable damaged during installation shall be removed and replaced with equivalent cable at the Contractor's expense.

(7) Splices:

1) Cable Rated at 600 V: No splices shall be made in cable unless authorized by the COR. Where splices are authorized, they shall be permitted only at boxes, outlets, panelboards, cabinets, cable trenches, and cable trays. Splices will not normally be permitted in buried cable runs. All splices or joints shall be covered with insulation equal to that on the insulated conductors.

Joints and splices for copper conductors, where authorized, may be the soldered-type or the crimp or compression-type. Connectors for joining two wires No. 6 and smaller shall be equal to Buchanan pres-SURE splice cap connector or 3M Scotchlok spring connectors.

Connectors for splicing conductors in multiconductor cable shall be of the two-way type equal to T&B compression or T&B STA-KON connectors. No. 8 AWG and smaller size wires and cables shall be spliced or joined so as to be mechanically and electrically secure before being soldered. Where shielded cables are spliced, care shall be taken to ensure that the shielding braid is continuously connected across the splice.

2) Cables Rated Above 3,000 V: Install with the required number of manufacturer's recommended splice kits. All splices shall be suitable for grounding the shields. The splices shall be completely moisture proof and be insulated for at least the same level as that of the cable.

(8) Solderless-type lugs and connectors shall be used for joining or connecting cables to terminal blocks or devices. Terminations of wire No. 8 AWG and smaller shall be made with preinsulated pressure-crimp-type terminal connectors with ring tongues equal to AMP "Plastic-Grip" terminals manufactured by Aircraft Marine Products, Harrisburg, Pennsylvania.

(9) Connectors shall be suitable for use on the particular conductor on which the connector is used.

(10) Wires, cables, and individual conductors of multiconductor power cables shall be neatly tagged at each end with fiber tags attached by cords. Fiber tags shall be 1 1/2-inch-diameter, shall be not less than 1/16-inch-thick, and shall have a 3/32-inch-diameter hole drilled or punched with the center approximately 3/16 inch from the edge. Tags shall be marked with the cable designation or conductor designation as applicable. Designations shall be as indicated on wiring diagrams, shall be lettered with black, waterproof ink, and shall be covered with a coat of clear varnish or shellac.

Individual conductors of multiconductor control and telemetering cable shall be marked at each end with heat shrinkable marking sleeves. The heat shrinkable marking sleeves shall be suitable for being slipped onto each conductor and heat shrunk to fit the conductor using a heat gun. After shrinking, the marker sleeve shall be tight enough to stay in place regardless of conductor position and loose enough to permit the marker to be slid and twisted so it can be read after the conductor is terminated. The lettering shall be machine printed or neatly hand printed with indelible ink, black on white background and shall be in accordance with the designations shown on wiring diagrams. The heat shrink tubing shall be suitable for being printed in a typewriter or printer with multiple strike inked textile ribbon. The heat-shrink marking shall be equal to Critchley, E-Z Mark Type I HS, with a nominal shrink ratio of 2:1, as manufactured by Critchley Inc.

(11) Cable installed in a vertical plane or in an inclined plane shall be supported by means of approved cable grips, including hooks, and installed with slack spans between supports. Cable entering equipment shall be securely clamped by means of approved commercial cable clamps. When cables are installed in sleeves under equipment, the openings shall be blocked with foam rubber material approved by the COR. Where cables pass through sleeves or blockouts, urethane foam equal to Isofoam PE-2 may be used in lieu of clamps or woven grips for supporting cables or in lieu of foam rubber for blocking openings.

(12) Panelboard and switchboard wiring shall be permanently supported and clamped to prevent loosening or shifting.

(13) Runs, connections, soldering, taping, and tagging of insulated conductors provided shall be subject to approval of the COR. After all insulated conductors are installed and all

equipment, devices, and fixtures have been connected, acceptance tests shall be conducted in accordance with Section 9.1.2 - “Acceptance Tests”.

(14) Shielded control cables, except as required by section (16) below, which are routed from the yard into the service building and connected to control, metering, and relaying panels shall have at least one nonactive conductor in each cable which shall be grounded at both ends. Shielding and spare conductors of shielded control cable shall also be grounded at both ends by the method shown on drawing 31 6000 or by other methods approved by the COR.

(15) Shielding on each power cable shall be grounded on each end.

(16) Of the total number of conductors in control cables for dc circuits from the switchboard to a power circuit breaker, or motor-operated disconnect switch there shall be at least six spare conductors. Of the total number of conductors in control cable for dc circuits from the switchboard to a power transformer or reactor, there shall be at least four spare conductors. These spare conductors shall be in addition to a nonactive conductor in each cable. The nonactive conductor shall be grounded at both ends. Spare conductors in each individual cable shall be counted in pairs. If there are four unused conductors in a cable, one conductor shall be used as the ground nonactive conductor leaving three conductors for spares, but only two of the remaining three conductors can be counted as spares.

(17) Dc circuits connecting to a device at a power circuit breaker, transformer, or reactor shall be run radially and the positive and negative leads in a circuit shall be run in the same cable.

(18) A 5-conductor cable shall be provided for each 3-phase current or potential transformer secondary winding circuit.

(19) The Contractor shall install cable without exceeding the maximum allowable pulling tensions and sidewall pressures as recommended by the cable manufacturer. The Contractor's conduit and pull box system shall be designed to meet these requirements.

9.2.4 TERMINAL BOXES:

1. GENERAL: Fuses with the fuse cutout bases shall be provided in the terminal boxes for the wound-type voltage transformers and coupling capacitor voltage transformers.

2. MATERIAL:

   (1) Terminal Boxes: Instrument transformer and coupling capacitor voltage transformer terminal boxes shall be in accordance with drawing 31 1085. Type G and H terminal boxes shall be in accordance with drawing 31 1086.

SECTION 9.3--BUS SYSTEMS

9.3.1 OUTDOOR STRAIN AND JUMPER BUSES, RIGID BUS, AND OVERHEAD GROUND WIRE:

1. MATERIAL:

(1) Cable:

1) All-aluminum cable shall be hard-drawn and in accordance with ASTM B 231, Class AA.

2) Copper strain and jumper buses shall be copper cable in accordance with ASTM B 8, Class A.

3) ACSR cable shall be in accordance with ASTM B 232. The galvanized steel strand core wire shall be 7 strand and shall be in accordance with ASTM B 498.

4) Overhead ground wire shall be 7 wire, 3/8 inch, conforming to "High-Strength Grade", "Class A" steel strand in accordance with ASTM A 363.

(2) Aluminum Pipe: Unless otherwise specified, rigid buses shall be Schedule 40 seamless aluminum pipe equal to 6063-T6 alloy in accordance with ASTM B 241/B241M.

(3) Insulators:

1) Unless otherwise specified, suspension-type insulators shall be gray in color, be the ball-and-socket type and in accordance with Class 52-3 of ANSI C29.2 for Wet-Process Porcelain Insulators. Insulator connections shall be made with stainless steel cotter pins having a minimum spread of 1 inch at the end of the legs.

2) Unless otherwise specified, post-type insulators shall be gray in color and shall be in accordance with ANSI C29.9 for high-voltage insulators as shown on drawing 31 1081.

3) Composite post insulators shall be gray in color and shall be in accordance with ANSI C29.9 for high-voltage insulators for dimensional and electrical performance values. Composite post insulators shall be manufactured with injection-molded silicone rubber, surrounding a fiberglass core, with crimped end fittings. Deflection values shall meet project requirements.

(4) Hardware Fittings: Each item of hardware shall be galvanized steel or galvanized malleable iron. Each overhead ground wire dead end assembly shall develop no less than 95 percent of the ultimate strength of the overhead ground wire. Items for use in insulator assemblies shall have a rated breaking strength of not less than that of the rated mechanical strength of the insulators with which they are used. Clevis connections shall be made with threaded hex-head bolts, nuts, and stainless steel self-locking cotter pins. Threaded assemblies in tension shall have a rated strength of not less than two times the rated strength of the surrounding hardware.

(5) Clamps and Connectors: Clamps and connectors for use at 230 kV and above shall be streamlined type for extra-high-voltage application and shall have a radio-influence-voltage (RIV) level of 250 microvolts or less when attached to a single conductor energized under the following conditions:

Phase-to-phase bus voltage (kV)		Maximum phase-to-ground voltage plus 20 percent (kV)	*Maximum distance between fitting and ground plane (ft)
Nominal	Maximum		
230	242	170	6
345	362	250	9
500	550	380	13

*Equal to approximately 0.4 inch per line-to-ground kilovolts.

1) Rigid bus support fittings and terminal connections for aluminum pipe shall be in accordance with ASTM B 26/B 26M Designation No. 356 T6. Fitting and connector material shall meet the mechanical strength requirements of Table 2, ASTM B 26/B 26M for Alloy No. 356 T6.

2) Expansion bus supports and expansion terminal connectors shall provide space for expansion of aluminum rigid bus runs (from expansion to fixed fitting) for a temperature range from (-20°C or -30°C) to +93°C. The minimum requirements for expansion fittings shall be in accordance with the following tables:

Minimum Requirements For Expansion Bus Supports					
				† Bus Length Limit	
Bolt Circle (inch)	Minimum Ambient Temperature °C	Minimum Ambient Temperature °F	Minimum Expansion Space Each Side (inch)	One Side (feet)	Both Sides (feet)
3	-20	-4	1.125	35	70
3	-30	-22	1.125	30	60
*5	-20	-4	2.125	65	130
*5	-30	-22	2.125	60	120
7	-20	-4	3.000	95	190
7	-30	-22	3.000	85	170

* 5-inch bolt circle is specified for all insulator stacks on drawing 31 1081.
† These limits would increase if greater expansion space in provided.

Minimum Requirements For Expansion Terminals			
Expansion Terminal (Type)	Minimum Ambient Temperature (C°)	Minimum Expansion Space (inch)	‡ Bus Length Limit (feet)
Pad-To-Tube	-20	3.75	120
Pad-To-Tube	-30	3.75	110
Stud-To-Tube	-20	2.00	60
Stud-To-Tube	-30	2.00	55

‡ These limits would increase if greater expansion space is provided.

Except as otherwise specified, expansion terminals shall be the type with alignment guides and not the semi-flexible type or the type without alignment guide.

3) Clamps, Compression or Swaged (DMC CableLok or equal) Fittings for ACSR or Aluminum Conductors: Suspension and bus support clamps, terminals, dead end fittings, and strain clamps shall be aluminum alloy and of the type shown on the drawings and in the project specifications. All clevis connections shall be made with threaded hex-head bolts, nuts, and stainless steel self-locking cotter pins. Compression-type dead end fittings shall develop at least 95 percent of the ultimate strength of the conductor and shall have a conductivity of not less than that of the conductor with which they are used.

4) Bus Connectors, Corona Bells, Couplers, Height Adapters, and Equipment Terminal Connectors: Connectors and height adapters, including equipment terminal connectors and corona bells, shall be of the sizes required and of the types indicated on the drawings and in the project specifications.

   Welded couplers for splices shall be made of aluminum 6063-T6 alloy tubing in accordance with ASTM B 241/B241M with center stop to provide correct gap between the ends of the tubing during welding.

   Bends shall be factory elbows connectors (angle couplers). Material for welded elbow connectors shall be in accordance with ASTM B 26/B 26M Designation No. 356 T6.

   Except as otherwise indicated on the drawings, aluminum-to-aluminum and aluminum-to-copper connections shall be made with aluminum connectors. Aluminum connectors shall be made of aluminum alloy SG70A in accordance with ASTM B 26 (Aluminum Association Alloy Designation No. 356) and shall be designed and proportioned for contact with copper surfaces without the use of any plating or bushings.

   Compression-type splices, elbows, and fittings (DMC Powerlok or equal) in lieu of welded-type may be used on the rigid bus as approved by the COR. Material for compression splices and elbows shall be made of 6061-T6 aluminum alloy per ASTM B241. Splices shall be the long type.

   Copper-to-copper connections shall be made with bronze connectors.

   Where bronze connectors are specified for aluminum connections, the connector shall be tin plated to a thickness of not less than 0.0005 inch over the entire area that is in contact with aluminum.

   Terminal connector pads shall be in accordance with latest NEMA Publication No. CC-1.

5) Paste: Paste shall be of the oxide-inhibiting, corrosion-resistant type equal to No-Ox-Id or Penetrox-A.

6) Corona Rings: Corona rings shall be provided to shield hardware as shown on the drawings and as required by equipment and material manufacturers and suppliers.

2. INSTALLATION:

(1) Rigid Bus: Rigid buses shall be formed and installed such that stresses between connecting terminals and between bus supports are reduced to a minimum. Bends shall be made with welded elbows connectors (angle couplers) unless shown otherwise on the drawings or in the project specifications. Where field bends are required, the bends shall have a radius equal to eight times the nominal pipe size. The bus shall be free of kinks, indentations, and flattened surfaces. The number of splices shall be kept to a minimum. Unless otherwise approved by the COR, noted on the drawings, or noted in the project specifications, splices in aluminum pipe bus shall be welded type. The welded-type splices and elbows shall be installed and

welded in accordance with detailed instructions furnished by the manufacturer of the couplers. Compression type splices, elbows, and fittings (if allowed) shall be installed in accordance with detailed instructions and using compression equipment provided by the manufacturer of the couplers in accordance with its lease and loan policy. Provide a ¼ inch diameter weep hole (for drainage) at the low point of each rigid tubular bus conductor span.

Expansion fittings should be installed in accordance with manufacturer's instructions. A simple method of determining the setting for a specific fitting and a specific conductor temperature is illustrated by the following example:

EXAMPLE: Expansion fitting parameters and conductor temperature

T_R = Temperature range = (-22°F to +200°F) or (-30°C to +93°C)
= 222°F or 123°C
S = Expansion space for 120-foot maximum bus length = 3.75 inches
T_C = Conductor installation temperature = 68°F
L = Bus length = 120 feet or less

Using the +200°F limit as a reference, the setting must provide expansion for (200°F - 68°F) = 132°F. Since the expansion function is linear, the proportion needed of the total space provided is simply $\left(\frac{132°F}{T_R}\right) S = \left(\frac{132°F}{222°F}\right)$ 3.75 = 2.23 inches from the 200°F reference limit.

Clean all mating surfaces prior to installing bolted connectors. Oxide-inhibiting paste shall be used in making all-aluminum and aluminum-to-copper connections. The paste shall be applied, the aluminum surfaces shall be wire brushed through the paste, and additional paste shall be applied if necessary to cover the contact area. Paste remaining after the connectors are tightened shall be retained as a seal against moisture. All bolted-type connectors shall be clamped and locked securely using torque wrenches and the moments recommended by the manufacturers.

Welding of aluminum pipe bus shall be done in accordance with AWS D1.2. The finished welds shall be smooth and free of weld spatter, adhesions, scratches, etc. Weld around the entire perimeter of electrical fittings to the rigid bus.

Welding shall be performed only by welders who are currently certified in accordance with AWS D1.2. Provide written certification to the COR.

ACSR damping cable shall have multi-strand core and shall be installed in rigid pipe buses in accordance with the following table except as otherwise allowed:

Nominal Pipe Size (inches)	Single ACSR Cable (kcmil)
1 1/2 to 3	226.8
3 1/2	397.5
4	795
5	1431
6	1590

Vibration-damping ACSR cable shall be inserted into aluminum pipe buses, shall be continuous unspliced length throughout bus runs, and shall be left unrestrained in order to dampen vibrations. Corona bells shall be installed on all open ends of pipe bus including

those at equipment terminals and at expansion connectors without alignment guides. Two ACSR multi-strand core cables may be substituted for the single cables specified provided the weight of the two cables shall equal the weight of the single cables plus or minus 10 percent.

(2) Strain and Jumper Buses and Overhead Ground Wire: Equipment and methods used for installing strain and jumper buses and overhead ground wire shall be subject to the approval of the COR. Joints, splices, and repair sleeves will not be allowed and particular care shall be taken to insure that the cables do not become abraded. Sections of the cables damaged by the application of gripping attachments will be considered as damaged material.

Clean mating surfaces prior to installing bolted connectors. Oxide-inhibiting paste shall be used in making aluminum-to-aluminum and aluminum-to-copper connections. The paste shall be applied, the aluminum surfaces shall be wire brushed through the paste, and additional paste shall be applied if necessary to cover the contact area. Paste remaining after the connectors are tightened shall be retained as a seal against moisture. Bolted-type connectors shall be clamped and locked securely using torque wrenches and the moments recommended by the manufacturers.

Specific instructions, including sag data and drawings not included in the specifications, necessary to complete the strain and jumper bus and overhead ground wire installation will be furnished by the COR.

SECTION 9.4--EXISTING OUTDOOR ELECTRICAL EQUIPMENT AND MATERIAL

9.4.1 EXISTING OUTDOOR ELECTRICAL EQUIPMENT AND MATERIAL:

1. STORAGE OF REMOVED EQUIPMENT AND MATERIAL: Disconnect, dismantle, and load equipment and material from the existing installation, and haul them to the locations where they are to be stored. Provide storage and care for removed equipment and material until they are transported. Equipment with PCB's shall be removed in accordance with Division 13.

2. LOST OR DAMAGED EQUIPMENT AND MATERIAL: Equipment and material to be reused shall be stored properly until ready for installation. Replace material lost or damaged after they are removed. Equipment destroyed or damaged in handling or storage to such an extent that it is no longer usable, as determined by the COR, will be considered as damaged material. The Contractor may repair damaged equipment that can be satisfactorily repaired, as determined by the COR. Otherwise, the Contractor shall replace such equipment. Extreme care shall be used to avoid damaging bushings or other parts of the equipment that would prevent immediate reuse of the equipment.

3. DISCONNECTED GROUNDING CABLE RISERS: Grounding cable risers disconnected from removed equipment shall be buried at least 18 inches under the finished grade. Excavations shall be filled with compacted backfill to the required subgrade elevation and the gravel surfacing shall be restored as provided in the Standard 2 - Sitework.

4. DISCONNECTED UNDERGROUND CONDUITS: Underground conduits that are to be abandoned shall have all cables removed from the inside, shall be cut off at finished grade, and shall be capped.

5. DISCONNECTED CONTROL AND STATION-SERVICE POWER CABLES: Control and station-service power cables which are disconnected from equipment and are not reused shall be disconnected at both ends and the portion that is buried underground shall be abandoned. The portion in conduit, trench, and/or trays shall be removed and disposed of by the Contractor.

SECTION 9.5--SUBSTATION LIGHTING

9.5.1 LIGHTING UNITS:

1. GENERAL: Grounding, electrical conduit, and insulated wire and cable systems other than lighting fixture wire shall be in accordance with section 9.2 "Grounding, Conduit, and Low-Voltage Cable Systems". Provide temporary lighting equipment if necessary to accommodate and facilitate construction operations.

2. INSTALLATION: Install substation lighting units at the locations shown on the drawings, and make conduit, wiring, cable, and grounding connections.

SECTION 9.6--SUBSTATION SIGNS

9.6.1 SECURITY, IDENTIFICATION, DANGER WARNING, AND SAFETY SIGNS:

1. GENERAL: Security signs, phase-identification signs, and equipment identification signs shall be in accordance with drawing 31 1000 except that text or format may vary for miscellaneous items. Danger signs shall be in accordance with drawing 31 1089. Danger sign for shunt capacitor banks shall be in accordance with drawing 31 1079. Warning and safety signs will be prepared as needed on a case by case basis. The mounting bolts, nuts, and washers shall be galvanized or of nonferrous, noncorrosive metal.

2. INSTALLATION: Signs shall be mounted in a manner to avoid chipping the surfaces. The mounting location of signs shall be as specified in project specifications and as directed by the COR. The Contractor shall perform required drilling and tapping for mounting the signs on nontubular steel members.

   Signs mounted on tubular steel members shall be secured with fasteners driven by a powder-actuated tool as manufactured by Ramset Fastening System; by Remington Arms Company, Inc.; or by Hilti, Inc.

   The body of fasteners shall be limited to a length that will not penetrate the wall of the tubular steel members. Signs mounted on concrete structures shall be secured either by the powder-actuated tool method or by inset expansion screw anchors.

SECTION 9.7--CONTROL, METERING, AND RELAYING EQUIPMENT

9.7.1 DUPLEX SWITCHBOARD SECTIONS:

1. GENERAL: The Contractor shall furnish switchboard wire, insulating tape, solder, flux, connectors, terminals, brackets, bolts, and other material required for installing switchboard sections and switchboard devices and material required for filling holes and cutouts in existing switchboards.

   The Contractor shall receive, install, connect, and make ready for service Government-furnished duplex switchboard sections and unmounted switchboard devices. The switchboard sections shall be installed in the service building where shown on the drawings. Any apparent damage shall be noted on the shipper's paperwork and immediately brought to the attention of the COR.

2. MATERIAL:

   (1) Switchboard Wiring: Switchboard-type No. 14 AWG, Class K stranded, copper conductor, rated for 600-V service, with insulation equal to General Electric Company Vulkene (SIS).

   (2) Wire Terminations: Wire terminations shall be made with preinsulated, pressure-crimp-type terminal connectors with ring tongues equal to AMP "Plastic- Grip" terminals manufactured by Aircraft-Marine Products.

3. INSTALLATION: Government-furnished duplex switchboard sections and unmounted switchboard devices shall be installed complete and ready for normal operation. Installation shall include the following:

   (1) Receiving, handling, storing, and providing proper care for the duplex switchboard sections and unmounted devices prior to and during installation. After installation, the Contractor shall repair damaged finished surfaces of the switchboard sections in accordance with the "Painting" Standards.

   (2) Drilling holes required for mounting.

   (3) Mounting and leveling each duplex switchboard section in position. Channel bases shall be grouted with grouting mortar in accordance with the Standard 3 – Concrete, Section 3.2.5 "Grouting Mortar for Equipment and Metalwork".

   (4) Installing unmounted switchboard devices.

   (5) Removing and replacing end trims.

   (6) Making electrical connections from outdoor and service building electrical equipment to switchboard sections, between switchboard sections, and between switchboard panels as required. Wiring connections between switchboards shall be made by multiconductor control cable. Single conductor or switchboard wiring may only be used for connections between adjacent switchboard sections and panels. The Contractor-installed wires and cables shall be tagged as directed by the COR.

   (7) Making wiring connections between adjacent existing switchboard panels and connections between devices within a switchboard panel. These wiring connections shall meet the following requirements:

      1) Exposed wiring shall be kept to a minimum, but where used, wiring shall be formed into compact groups bound together and firmly supported and shall be run straight, horizontally, or vertically with short-radius, right-angle bends. Hinge wiring shall be twisted around the longitudinal axis of the wire, wherever possible, instead of being bent laterally. Each wire shall be protected from abrasion where it leaves a channel or duct.

Splices will not be permitted in wiring. Connections shall be made at device studs or terminal blocks. Wiring between various devices shall be performed by the most direct method rather than looping back and forth across switchboards. Wires at terminal blocks shall be arranged or grouped for connections to a minimum number of external cables.

2) Filling holes and cutouts resulting from removal of existing equipment. Switchboard filling shall be approved by the COR. Cutouts shall be filled with steel plates. Joints and filled holes shall be finished smooth and flush with the surrounding panel.

3) Repairing and replacing damaged material. Repairs and replacements shall be approved by the COR.

4) Correcting errors made by the Contractor in installation at no expense to Western.

9.7.2 UNMOUNTED DEVICES ON EXISTING DUPLEX SWITCHBOARDS:

1. GENERAL: Furnish switchboard wire, steel plates, and associated material for filling holes and cutouts; insulating tape; solder; flux, mimic bus with symbols; and connections for installing the switchboard devices.

   The Contractor shall receive, install, and connect unmounted switchboard devices; remove existing devices; and remove and reinstall existing devices as specified. Government-furnished devices will be delivered to the Contractor as provided for in the project specifications.

2. MATERIAL:

   (1) Switchboard Wiring: Switchboard-type No. 14 AWG, Class K stranded, copper conductor, rated for 600-V service, with insulation equal to General Electric Company Vulkene (SIS).

   (2) Wire Terminations: Preinsulated, pressure-crimp-type terminal connectors with ring tongues equal to AMP "Plastic-grip" terminals manufactured by Aircraft-Marine Products.

3. INSTALLATION: Make internal and external connections, make internal switchboard wiring changes and additions, and extend or replace existing internal wires and cables where additional length is required to enable the switchboards and equipment to be made ready for service. Connections shall be made properly and adjustments shall be made where required to put switchboards and equipment into normal operation.

   Cut and drill holes where required for mounting. The Contractor is responsible for proper installation of the devices on switchboard panels as specified.

   Special care shall be taken when disconnecting, moving, removing, and reconnecting electrical devices, and end trims, to avoid equipment misoperation and damage to the equipment. Wires and cables to be disconnected and reused shall be tagged prior to removal. Unused existing wire and cable shall be coiled and turned over to the COR. Electrical devices to be reused shall be reinstalled as shown on the drawings. Electrical devices not reused shall be turned over to the COR. Existing circuits from which devices have been removed shall be reconnected and tested to verify operation and retention of existing circuits. Repair areas from which devices have been removed as directed by the COR. Holes and panel cutouts shall be filled so that the panel space may be reused. Cutouts shall be filled with steel plates and joints, and filled holes shall be finished smooth and flush with the surrounding panel. Unfinished and damaged portions of repaired panels shall be finished inside and outside to match the finish and color of the adjacent, undamaged finished surface.

   Equipment destroyed or damaged in handling and storage, as determined by the COR, shall be repaired in a manner approved by the COR or shall be replaced by and at the expense of the Contractor.

The Contractor shall make the necessary arrangements with the COR before removing equipment and material.

9.7.3 DIRECT- AND ALTERNATING-CURRENT DISTRIBUTION BOARDS:

1. GENERAL: Distribution boards required to complete the low-voltage ac and dc systems shall be in accordance with this standard, Western's equipment standard WAPA ES 2.4, project specifications, and the drawings.

2. INSTALLATION: Distribution boards shall be installed complete as described in this paragraph, including wire and connections required to put the distribution boards into readiness for normal operations. The installation and location of the distribution boards shall be as shown on the drawings. All cables shall enter the boards from beneath by means of the building cable trenches or raised floor construction under the boards as specified. Furnish anchoring, supporting, and mounting material as required to install the distribution boards.

SECTION 9.8--STATION BATTERY AND BATTERY CHARGERS

9.8.1 STATION BATTERY:

1. GENERAL: The Contractor shall receive, install, connect, and make ready for service the Government-furnished station battery. If the battery is a flooded lead acid design, the "battery" includes one or more separate rack(s) which is (are) to be received, assembled, and installed by the Contractor. If the battery is a valve regulated lead acid (VRLA) design, then the "battery" includes/is equipped with a modular framing system, which is to be received, assembled, and installed by the Contractor. The battery shall be installed in the service building battery room/location as shown on the drawings. The battery will be delivered to the Contractor at the substation site as provided in the Standard 1 - General Requirements, Section 1.2.1 "Government-Furnished Material". Any apparent damage noticed at the time of delivery shall be noted on the shipper's paperwork and immediately brought to the attention of the COR.

2. INSTALLATION: The Government-furnished, 125-V station battery shall be installed complete and ready for use. Installation shall include the following:

   (1) Receive, unload, handle, store, and provide proper care for the battery prior to and during installation. "Receive" includes making an immediate inventory (using the packing list supplied by the manufacturer with the battery) of all items, parts, manufacturer's data/drawings, and accessories shipped and notifying the COR of any shortages. "Store" includes indoor storage in a cool (77°F), clean, dry location, and as otherwise described in the manufacturer's installation instructions. "Proper care" includes satisfying the manufacturer's conditions for preserving warranty coverage.

   (2) Provide the initial charge and maintain a proper charge on the battery until the installation is accepted by Western. If the permanent battery location is not available, battery cells/modules may be stored on the shipping pallets/crates for an interval not to exceed 6 (six) months from the date of shipment to the date of initial charge. The battery is to be given its initial charge (see manufacturer's installation instructions) before the end of the 6 month storage interval. The Contractor is to provide the manufacturer's required re-charging and maintenance charging for extended storage. The storage interval length will be shorter for storage at temperatures above 77°F (see manufacturer's installation instructions). The Contractor shall furnish temporary battery charging equipment and loading devices needed to make the initial charge, discharge tests, and subsequent re-chargings.

   (3) Provide and install the necessary expansion type anchors, flat washers, beveled washers, and miscellaneous hardware as required to install the anchors in accordance with the manufacturer's recommendations. Determine the floor anchor bolt locations based upon the battery's permanent location. Prior to the drilling of any holes for anchor bolts, the Contractor shall locate and mark the reinforcement steel embedded in the concrete slab. All required anchor bolt holes shall be drilled so as to miss the embedded reinforcing steel and allow proper cover to be maintained on the reinforcing steel in accordance with Western's Concrete Standards drawing 01 2004. The proposed location of the anchor bolts and battery framework shall be approved by the COR prior to drilling anchor bolt holes. The battery/rack shall be anchored to the concrete floor. GNB "Absolyte" VRLA modules shall be anchored as follows:

      1) The Contractor shall locate and drill holes in the concrete floor for the 1/2-inch diameter, carbon steel, stud type expansion anchors. The anchor bolt layout pattern shall be in accordance with "GNB Industrial Battery Company" drawing 400948, Revision B, dated 93/06/10, or subsequent revision, as provided with the battery. The anchor bolt holes for the battery frame shall use either of the base anchor holes provided in the bottom flange of the S4 x 7.7 horizontal support "I" beam. Due to the bevel on the flange of the S4 x 7.7, steel S shape member, beveled washers may be required for proper installation. Only one anchor bolt for each end of the support beam is necessary, and only one anchor bolt on either side of the beam web is required. If the floor reinforcing is in a

position that interferes with alternating the anchor bolts on either side of the web, then both anchor bolts may be installed on the same side of the web, provided that the anchor bolts for an adjacent horizontal support are both located on the opposite side of the web in relation to the horizontal support affected by the floor reinforcing. A typical installation of a battery with the 4 (across) by 5 (high) module arrangement should required a total of 10 anchor bolts with 5 being left of the horizontal support webs and 5 being right, and 5 of the 10 using the front anchor bolt holes and 5 using the back anchor bolt holes.

2) The anchor bolts shall have a minimum 1 inch and a maximum of 1 1/2 inches projection above the concrete floor finish grade. The anchor bolt shall have a minimum of 2 1/4-inch embedment into the concrete, with the maximum embedment as per the manufacturer's recommendation, but shall not completely penetrate the concrete slab. The anchor bolt embedment should be designed based on a slab thickness of 5 inches and concrete strength of 4,000 psi(f'c). The anchor bolt shall resist an ultimate tensile load of 5,000 pounds and an ultimate shear load of 2,500 pounds each, at it's design embedment depth. The anchor bolts shall be as follows or equal:

a. Hilti Kwik Bolt II. Manufactured by: Hilti Fastener Corporation; P.O. Box 21148; Tulsa, OK 74121,

b. Rawl-Bolt or Rawl-Stud. Manufactured by: The Rawlplug Company, Inc.; New Rochelle, NY 10802,

(4) Assemble the battery according to the manufacturer's instructions, placing the battery in its permanent location. The battery shall be level.

(5) Furnish miscellaneous material, including terminals, mounting brackets, bolts, leveling spacers and shims, and other items required for assembling and installing the battery and making connections.

(6) Making internal and external connections. External connections shall be made to the dc distribution board and to the battery temperature sensor(s) for the battery chargers. Refer to the manufacturer's recommendations on use of the NO-OX-ID "A" grease when making connections. The cable size for the cabling to the dc distribution board shall be as shown on the drawings.

(7) Each battery temperature sensor supplied with and used by the battery chargers shall be connected to a negative terminal of a cell in the center of a group of cells. The temperature sensor shall be fastened to the post using the terminal connection bolt, and located between the intercell connector strap and the washer. (From the cell negative terminal post: intercell connector strap, temperature sensor, washer, bolt head).

(8) Repair or replace damaged material.

9.8.2 BATTERY CHARGERS:

1. GENERAL: The Contractor shall receive, connect, and make ready for service the Government-furnished battery chargers. Battery chargers shall be installed in the service building control room as shown on the drawings. The battery chargers will be delivered to the Contractor as provided in the Standard 1 - General Requirements, Section 1.2.1 "Government-Furnished Material". Any apparent damage noticed at the time of delivery shall be noted on the shipper's paperwork and immediately brought to the attention of the COR.

2. INSTALLATION: The Government-furnished battery chargers shall be installed complete and ready for normal operation. Installation shall include the following:

(1) Receiving, handling, storing, and providing proper care for the battery chargers prior to and during installation.

(2) Drilling holes required for mounting.

(3) Furnishing miscellaneous material including anchors, terminals, brackets, bolts, and related items required for installation.

(4) Mounting and leveling each battery charger.

(5) Furnishing material and making wiring connections to ac and dc distribution boards, including installing and terminating:

1) battery temperature compensation remote sensors (one for each charger), as described above under the installation requirements for the battery.

2) cabling for charger alarm output contacts.

3) charger to charger interconnections, such as for load sharing.

(6) Repairing or replacing damaged material as determined by the COR.

(7) Repairing damaged finished surfaces in accordance with the Standard 12 - Painting.

(8) Equipment and wiring checkout in accordance with section 9.1.2 "Acceptance Tests."

Western
AREA POWER
ADMINISTRATION

CONSTRUCTION STANDARDS

STANDARD 10

TRANSMISSION LINE - ELECTRICAL

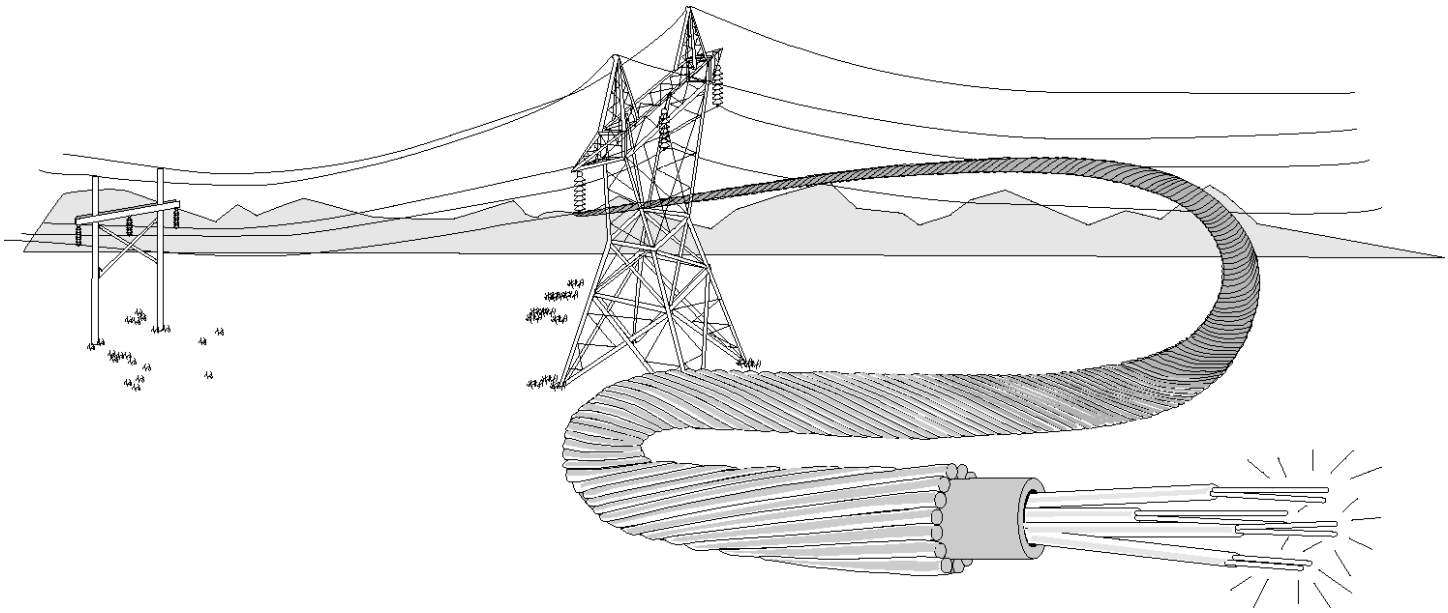

March 2010

SAFETY
A HABIT TO LIVE BY

TABLE OF CONTENTS

Page Number

SECTION 10.1--GENERAL 4

10.1.1 GENERAL 4

10.1.2 ITEMS REQUIRING SPECIAL ATTENTION 4
1. Bolt Tightening 4
2. Compression Fittings 4
3. Implosive Fittings 4
4. Bend Radius 4

SECTION 10.2--DRAWINGS, DATA, AND TEST REPORTS 5

10.2.1 GENERAL 5

10.2.2 DRAWINGS AND DATA 5

10.2.3 TEST REPORTS 7
1. Conductor Insulators Assemblies 7
2. Conductor 7
3. Overhead Ground Wire 7
4. Overhead Ground Wire Assemblies 7
5. Ground Resistance Measurements 7
6. Vibration Dampers 7
7. Conductor Spacer Damper 7
8. Optical Overhead Ground Wire 7

SECTION 10.3--CONDUCTOR INSULATOR ASSEMBLIES 8

10.3.1 GENERAL 8

10.3.2 MATERIAL 8
1. General 8
2. Porcelain and Toughened Glass Suspension-Type Insulators 8
3. Porcelain Line Post Insulators 9
4. Polymer-Fiberglass Suspension and Line Post Insulators 9
5. Suspension Clamps 10
6. Armor Rods 10
7. Assembly Coupling Hardware 10
8. Compression Dead Ends 11
9. Implosive Dead Ends 11
10. Strain Clamps 11
11. Grading Rings 11

10.3.3 TESTS 12
1. General 12
2. Insulators 12
3. Assemblies and Hardware 14

10.3.4 INSTALLATION 15

SECTION 10.4--OVERHEAD GROUND WIRE ASSEMBLIES 17

10.4.1 OVERHEAD GROUND WIRE ASSEMBLIES, GENERAL 17

10.4.2 MATERIAL 17
1. General 17
2. Suspension Clamps – Steel Strand Overhead Ground Wire 17
3. Suspension Clamps – Optical Overhead Ground Wire 17
4. Tension Assembly – Optical Overhead Ground Wire 17
5. Assembly Coupling Hardware 17
6. Compression Dead Ends 18
7. Implosive Dead Ends 18
8. Insulators 18

10.4.3 TESTS 18
1. Suspension Clamps 18
2. Assembly Coupling Hardware 18
3. Compression and Implosive Dead Ends 18
4. Insulators 18

10.4.4 INSTALLATION 18
1. General 18
2. Compression Dead Ends 19
3. Implosive Dead Ends 19
4. Turnbuckles 19

SECTION 10.5--ACCESSORIES FOR STRUCTURES 20

10.5.1 GENERAL 20

10.5.2 STRUCTURE GROUNDING 20
1. Wood Structures 20
2. Steel or Concrete Pole Structures 20

10.5.3 GROUND RESISTANCE MEASUREMENTS 20

10.5.4 GROUND ROD ASSEMBLIES 21

10.5.5 STRUCTURE SIGNS 21
1. Structure Number Signs 21
2. Aerial Patrol Mile Marker Signs 21
3. Aerial Patrol Warning Signs 21
4. Danger Signs 21

SECTION 10.6--CONDUCTOR, OVERHEAD GROUND WIRE, AND ACCESSORIES 22

10.6.1 CONDUCTORS 22
1. Material 22
2. Tests 23
3. Installation 23

10.6.2 STEEL STRAND OVERHEAD GROUND WIRE 27
1. General 27
2. Tests 27
3. Installation 27

10.6.3 OPTICAL OVERHEAD GROUND WIRE (OPGW) 27
1. Material 27

2. Tests 28
3. Installation 28

10.6.4 VIBRATION DAMPERS 28
1. General 28
2. Material 28
3. Tests 28
4. Installation 29

10.6.5 HOLD-DOWN WEIGHTS 30
1. Material 30
2. Installation 30

10.6.6 CONDUCTOR SPACER DAMPERS 30
1. Material 30
2. Tests 31
3. Installation 32

10.6.7 LINE MARKERS 32
1. Material 32
2. Installation 32
3. River Crossing 33
4. Transmission Line Over Crossing 33
5. Transmission Line Under Crossing 33
6. Transmission Line Angle Markers 33

SECTION 10.7--APPROACH SPANS 34

10.7.1 GENERAL 34

SECTION 10.1--GENERAL

10.1.1 GENERAL:

Comply with requirements specified under the "Safety and Health Requirements" paragraph of the "General Requirements" Standards.

Some drawings are typical, and the Contractor shall not be entitled to any allowance above the prices bid in the Bidding Schedule by reason of modifications of a minor nature.

10.1.2 ITEMS REQUIRING SPECIAL ATTENTION:

Items requiring special attention include the bolts in line hardware and accessories and the sleeves in compression fittings. Obtain installation instructions from the manufacturers of such items, and furnish at least two copies of such instructions to the COR at least 40 days prior to installation. The following installation procedures shall be adhered to:

1. BOLT TIGHTENING: Bolts used with suspension clamps, vibration dampers, and jumper conductor connectors shall be torqued to the manufacturer's recommended values using torque wrenches or other manufacturer-recommended methods. Western will make spot checks of bolt torques and, if deficiencies are found, the Contractor shall re-torque bolts to the extent deemed necessary by the COR.

2. COMPRESSION FITTINGS: Ensure that compression joints are centered, that the correct length of steel strand is inserted into the fittings, and that the steel sleeves of joints and dead ends are properly compressed onto the steel strands. Where aluminum sleeves are used for conductor compression fittings, care shall be exercised to ensure that compression deformations do not become sources of corona discharge. The COR reserves the right to witness and approve the installation of all compression fittings and to reject any compression fitting which is installed without the COR being present to witness the installing operation.

3. IMPLOSIVE FITTINGS: Follow the manufacturer's recommendations for installation and inspection of a properly installed fitting. The fitting shall have only one shallow lower profile in the middle of the aluminum sleeve and no other indentations or "throats" on the sleeve. Follow all local blasting regulations. Coordinate all detonations with the COR.

4. BEND RADIUS: Ensure that the minimum bend radius of the optical overhead ground wire (OPGW) is not exceeded at any time during installation. Strictly adhere to the manufacturer’s recommendations.

SECTION 10.2--DRAWINGS, DATA, AND TEST REPORTS

10.2.1 GENERAL:

Material shall not be installed prior to meeting the requirements of this standard for drawings, data, and test reports.

10.2.2 DRAWINGS AND DATA:

As soon as practicable after award of contract, but at least 40 days prior to installation of material, furnish to the Electrical Engineer, for review, three sets each of catalog data sheets of accessories and hardware used in conductor and overhead ground wire installation; three sets of drawings showing the complete insulator and overhead ground wire assemblies and details of all hardware and fittings used in the assemblies; and a complete material list showing the name of the manufacturer and the manufacturer's catalog number, or type, for each item of material as listed below that will be furnished in accordance with the requirements and tabulated in a manner similar to that shown.

For vibration dampers and/or spacer dampers the data furnished shall include the necessary vibration protection as recommended by the vibration damper and/or spacer damper manufacturer. This data shall include the quantity of dampers and/or spacer dampers required for the project based on protectable span lengths and the manufacturer's spacing recommendations.

For polymer-fiberglass insulators, the drawings and data furnished shall include description of the type resin used in the insulator core, the type base material used in the housing and weathersheds, and the method used to seal the junction of the metal end fittings and housing/sheath; drawings showing ratings and dimensions, including corona ring dimensions and mounting position on the insulator; and handling and installation instructions for the insulators being furnished.

For optical overhead ground wires (OPGW), the drawings and data furnished shall include three sets each of catalog data sheets of OPGW, accessories and hardware used in OPGW installation; three sets of drawings showing the OPGW attachment assemblies and details of all hardware and fittings used in the assemblies; and a complete material list showing the name of the manufacturer and the manufacturer's catalog number, or type, for each item.

MATERIAL	MANUFACTURER	CATALOG NO. OR TYPE
Conductor:	_____	_____
Steel-strand overhead ground wire:	_____	_____
Optical overhead ground wire	_____	_____
Insulator, porcelain suspension type:	_____	_____
Insulator, polymer-fiberglass suspension type:	_____	_____
Insulator, porcelain horizontal post type:	_____	_____

MATERIAL	MANUFACTURER	CATALOG NO. OR TYPE
Insulator, polymer-fiberglass horizontal post type:	_____	_____
Suspension clamps to fit:		
Conductors	_____	_____
Steel strand overhead ground wire	_____	_____
Optical overhead ground wire	_____	_____
Vibration dampers for attaching to:		
Conductors	_____	_____
Steel strand overhead ground wire	_____	_____
Optical overhead ground wire	_____	_____
Optical overhead ground wire tension clamps	_____	_____
Implosive or compression dead ends for:		
Conductors	_____	_____
Steel-strand overhead ground wire	_____	_____
Turnbuckles for use with tension insulator assemblies which support:		
Conductors	_____	_____
Overhead ground wire	_____	_____
Hold-down weights	_____	_____
Spacer dampers	_____	_____
Line markers	_____	_____

MATERIAL	MANUFACTURER	CATALOG NO. OR TYPE
20-inch balls	_____	_____
36-inch balls	_____	_____

10.2.3 TEST REPORTS:

As soon as practicable after completion of individual tests, furnish to the Electrical Engineer, for review and approval, two certified copies of records or results of tests as follows:

1. CONDUCTOR INSULATORS ASSEMBLIES: In accordance with Section 10.3.3.
2. CONDUCTOR: In accordance with Section 10.6.1.2.
3. OVERHEAD GROUND WIRE: In accordance with Section 10.6.2.3.
4. OVERHEAD GROUND WIRE ASSEMBLIES: In accordance with Section 10.4.3.
5. GROUND RESISTANCE MEASUREMENTS: In accordance with Section 10.5.3.
6. VIBRATION DAMPERS: In accordance with Section 10.6.3.3.
7. CONDUCTOR SPACER DAMPER: In accordance with Section 10.6.5.2.
8. OPTICAL OVERHEAD GROUND WIRE: In accordance with Section 10.6.3.2.

Certified Reports: Certified reports of results of previous design tests made on insulators, suspension clamps, assembly coupling hardware, compression or implosive dead ends, compression or implosive joints, conductors, overhead ground wires, vibration dampers and conductor spacer dampers identical to those required will be accepted as meeting the design test requirements of these standards.

SECTION 10.3--CONDUCTOR INSULATOR ASSEMBLIES

10.3.1 GENERAL:

Typical conductor insulator assemblies are shown on drawings 41 1020, 41 1021, 41 1022, 41 1023, 41 1024, and 41 1025.

10.3.2 MATERIAL:

1. GENERAL: Material to be used on the line end of insulator assemblies shall be protected during shipment and handling to prevent any damage that would become a source of corona discharge. Turnbuckles may be used, at the Contractor's option and at no additional cost to Western, as a part of tension insulator assemblies.

   The string length of a suspension assembly shall measure from the structure attachment point to the bottom of the clamp.

   The string length of a tension assembly shall measure from the structure attachment point to the compression dead end assembly attachment point.

   Material lists or purchase orders shall clearly indicate the insulator color.

   The quality assurance system of design, manufacture, and inspection of insulators shall conform to ISO 9001, and quality assurance certification according to ISO 9001 issued by an authorized inspection agency shall be submitted prior to installation.

2. PORCELAIN AND TOUGHENED GLASS SUSPENSION-TYPE INSULATORS: Insulators for conductor insulator assemblies shall be ball-and-socket type and radio noise-free. Insulator shells shall be made of wet process porcelain. Toughened glass insulators shall meet all the requirements of wet process porcelain insulators. The insulator units shall meet the requirements of ANSI C29.2, except as otherwise specified in these paragraphs. Toughened glass insulators shall be colorless or "clear" in color.

   The country of origin, year of manufacture, and the rated combined mechanical and electrical strength in pounds identified by the symbol M-E shall be printed on each unit.

   20,000-pound-strength insulators shall be Class 52-3, with a combined mechanical and electrical strength rating of 20,000 pounds.

   30,000-pound-strength insulators shall be Class 52-5, with a combined mechanical and electrical strength rating of 30,000 pounds.

   40,000-pound-strength insulators shall be Class 52-8, with a combined mechanical and electrical strength rating of 40,000 pounds.

   50,000-pound-strength insulators shall be Class 52-11, with a combined mechanical and electrical strength rating of 50,000 pounds.

   Metal caps and pins of insulators shall be manufactured from metal exhibiting a yield-strength to breaking-strength ratio of not less than two-thirds. Cotter pins shall be made of stainless steel, of the self-locking type, and have a spread of approximately 1 inch at the end of the legs.

(1) DIMENSIONS FOR BALL AND SOCKET CONNECTIONS

1) The dimensions and tolerances of ball and socket connections shall be as specified below:

a. ANSI Class 52-3 (ANSI Type B) shall be in accordance with ANSI C29.2.
b. ANSI Class 52-5 (ANSI Type J) shall be in accordance with ANSI C29.2.
c. ANSI Class 52-8 (ANSI Type K) shall be in accordance with ANSI C29.2.
d. IEC 20 mm and IEC 24 mm units shall be in accordance with IEC 60120.

2) Ball pins and sockets shall be checked after galvanizing by the applicable ball and socket gages specified in ANSI C29.2 or IEC Publication 60120. Ball pins shall be checked with the applicable "GO" gages in at least two directions at approximately 90 degrees to each other, and "NO GO" gages shall not pass in any direction.

3. PORCELAIN LINE POST INSULATORS: Insulator bodies shall be made of wet-process porcelain. The insulator units shall meet the requirements of ANSI C29.7, except as otherwise specified in these paragraphs.

The country of origin, year of manufacture, and the rated combined mechanical and electrical strength in pounds identified by the symbol M-E shall be printed on each unit.

4. POLYMER-FIBERGLASS SUSPENSION AND LINE POST INSULATORS: Polymer-fiberglass suspension insulators shall meet the requirements of ANSI C29.11, except as otherwise specified in these paragraphs.

Polymer suspension insulators shall be marked with the year of manufacture, the specified mechanical load (SML) in pounds and the routine test load (RTL) in pounds identified by the word “TEST”.

Polymer line post insulators shall be marked with the year of manufacture and the specified cantilever load (SCL) in pounds.

Each individual polymer-fiberglass insulator shall be placed in a plastic, moisture- resistant sleeve prior to shipping to retard contamination of the polymer during shipment and storage.

All fibers of the insulator core shall be continuous from end-to-end of the rod, oriented parallel to the rod, and fully and completely coated with a vinylester or epoxy resin matrix. During fabrication of the insulator core, the glass fibers shall not be allowed to touch one another without resin matrix surrounding each individual fiber.

The insulator core shall be mechanically and electrically sound and free from voids, foreign substances, and similar manufacturing flaws.

The housing of the composite insulator shall be equipped with weathersheds. The base material for the housing (sheath) and weathersheds shall be a silicone or EPDM rubber, or a silicone compound blended with an EP rubber during the batching process such that an alloy of the two is formed during the final vulcanization process. The housing and weathersheds shall be continuous or bonded and be smooth and free from imperfections.

The rod, sheath, and sheds shall be joined into one integral unit without voids by a compression molding process, high-temperature injection molding process, or a high temperature vulcanization process. Adhesives or other bonding material shall not be used for joining the rod, sheath, and sheds.

The end fittings shall be designed to transmit the mechanical load to the core and to develop the uniform and consistent mechanical strength of the insulator. The junction of the metal end fittings and the housing/sheath shall be permanently sealed to prohibit the entrance of moisture and foreign material. The end fittings of composite insulators after complete assembly with the core and housing shall be coaxial with one another resulting in no eccentric loading.

5. SUSPENSION CLAMPS: Suspension clamps for use with conductors shall be suitable for use directly on the conductors without armor rods unless otherwise specified. Clamp-top-type suspension clamps for use on line post insulators are not acceptable except as part of a line post jumper assembly unless otherwise specified.

   Design of clamps shall be such that unit pressures on the conductor are maintained at levels which prevent damage to conductor strands under maximum loading conditions encountered. Conductor supporting seat shall have sufficiently large longitudinal radii to prevent concentration of vibration bending and tension stresses at the conductor take off points. Centers of radii of the conductor seat shall be located on vertical lines extended below the clamp and no closer to the center of the clamp than the outside edges of the U-bolts. Clamps for conductors smaller than 795,000 circular mil shall have a clamp bore diameter equal to the nominal diameter of the conductor with a tolerance of plus 0.1 inches. Clamps for 795,000-circular mil conductor and larger shall have a clamp core diameter equal to the nominal diameter of the conductor with a tolerance of plus 0.05 inches and limit bending, bearing, and compression stresses of the conductor equivalent to Anderson Type CFSCS or Bethea Formula Suspension Clamps. Clamp shall be designed for a maximum-total vertical-conductor angle of 30° (15° on each side).

   Suspension clamps shall have aluminum alloy bodies, no bolt ends projecting below the bottom of the clamp if used at 230 kV and above, all surfaces smooth and free from burrs, and all edges and fillets rounded to minimize field concentration and radio interference. Each clamp shall be complete with a keeper piece, at least two U-bolts, and a 5/8-inch-diameter bolt having a hexagonal head and provided with hexagonal nut and with stainless steel self-locking cotter key. Unthreaded length of the bolt shall be adequate to ensure free rotation of the bolt with the nut run onto the bolt to the limit permitted by the threaded portion of the bolt. Each suspension clamp shall be capable of holding the conductor without slipping under an unbalanced tension of 4,000 pounds, except that clamps used for NESC heavy loading areas or 1,272,000-circular mil and larger conductor shall be capable of holding the conductor without slipping under an unbalanced tension of 5,000 pounds. The clamps shall be the nonmagnetic type. Each suspension clamp shall be designed to limit losses to a maximum of 10 W, with a 600-amp, root mean square, 60-Hz current flowing through the conductor.

   Magnetic losses shall be determined by averaging the losses as determined from a simultaneous measurement on at least four clamps. If dissimilar metals are used in making up the clamp, precautions shall be taken to minimize corrosion due to electrolytic action.

6. ARMOR RODS: Armor rods shall have parrot-bill ends at the voltages above 230-kV and shall be color coded to identify what conductor size it will be used for.

7. ASSEMBLY COUPLING HARDWARE: Material and methods used in the fabrication of assembly coupling hardware shall be selected to provide good toughness and ductility. Each component part of the coupling hardware used in the assemblies shall also be designed such that permanent deformation or yield does not occur at less than two-thirds of its ultimate rated breaking strength. The assembly coupling hardware shall be of corona-free quality for voltages of 230-kV and above; shall be galvanized; and all pins shall be complete with nuts, bolts, and self-locking stainless steel cotter keys.

   Castings shall be uniform, without sharp edges or corners, free of cracks, and shall not contain any defects to the extent that the strength or suitability of the item is affected.

Forgings shall be uniform in quality and condition, without sharp edges or corners, free of cracks, and shall be free of any defects to the extent that the strength or suitability of the item is affected.

Socket fittings shall be made of forged steel, cast steel, malleable iron, or ductile iron.

Ball fittings shall be made of steel forged in one piece. They shall be heat treated to obtain the ultimate strength specified on applicable drawings.

Bolts, nuts, and locknuts shall be galvanized steel. Bolts shall conform to SAE J429, Grade 8, and be made of a grade of steel commensurate with the ultimate strength specified for the hardware.

Unless otherwise specified, ferrous metal shall be galvanized to meet or exceed the requirements of ASTM A 153. Metal shall be free from burrs, sharp edges, lumps, and dross, and smooth so that interconnecting parts will fit properly and so that the parts may be assembled and disassembled readily. Threaded parts shall be galvanized after being threaded and excessive zinc removed from the threads. Nuts and locknuts shall be retapped after being galvanized and shall be capable of being threaded the entire length of the threads without the use of a wrench.

8. COMPRESSION DEAD ENDS: Each dead end assembly shall include a hot-dipped, galvanized-steel eye end, aluminum sleeve, dead end pad, and jumper connector pad of the compression type with bolted connection between the jumper connector pad and the dead end pad. Each dead end, when attached to the conductor, shall develop not less than 95 percent of the ultimate strength of the conductor and have a conductivity of not less than that of the conductor.

   The angle between the dead end bodies and the jumper connectors shall be approximately 60°. Dead ends and jumper connectors shall be protected during shipment to minimize damage that might serve as a point source for corona discharge. If such damage does occur, it shall be corrected by the Contractor before installation.

9. IMPLOSIVE DEAD ENDS: Implosive dead ends may be used in place of or in combination with compression dead ends as approved by the COR. If implosive dead ends are used, install in accordance with the manufacturer's recommendations. Dead ends shall be as manufactured by Implo Technologies, Inc., 73 Hemingway Crescent, Unionville, Ontario, CANADA L3R 2S4, or equal.

   Each dead end assembly shall include a swivel hot-dipped, galvanized-steel eye end, aluminum sleeves, dead end pad, and jumper connector of the implosive type with bolted connection between the jumper connector pad and the dead end pad. The required implosive charge shall be mounted on the dead end and jumper connector, and the placement location for the detonator shall be clearly indicated. Each dead end, when attached to the conductor, shall develop not less than 100 percent of the ultimate strength of the conductor and have a conductivity of not less than that of the conductor.

10. STRAIN CLAMPS: Strain clamps shall not be used unless specified. Strain clamps shall be complete with a socket-eye fitting and U-bolt arrangement for binding the conductor. Strain clamps shall be capable of holding the conductor without slipping or damaging the conductor when the conductor is under a tension of 85 percent of its ultimate strength. Strain clamps for ACSR conductor shall have aluminum alloy bodies.

11. GRADING RINGS: Grading rings or stress distribution discs are required at the energized end for polymer insulator assemblies used at 115-kV or greater. Grading rings are required at both ends of polymer insulator assemblies used at 230-kV or greater. Grading rings shall have a cast-aluminum alloy body, all surfaces smooth and free from burrs, and all edges and fillets rounded to minimize field concentrations and radio interference. Grading rings shall be capable of installation and removal with hot line tools without disassembling any other part of the insulator assembly.

Grading rings shall be sized and located as determined by the insulator manufacturer.

The design of the insulator end fitting and the grading ring shall be such that the ring is capable of being mounted only in the position and orientation determined by the insulator manufacturer. In lieu of this, the insulator end fitting or grading ring shall be clearly marked showing the correct location and orientation of the grading ring.

10.3.3 TESTS:

1. GENERAL: Insulators, material, and assemblies shall be subjected to the applicable tests required by this paragraph. Furnish insulators, hardware, fittings, test apparatus, and instruments required to complete the test. The COR reserves the right to witness tests and to approve the manner in which the tests are conducted.

2. INSULATORS: Test reports shall specify the name and location of the factory where the insulators were made.

   (1) Porcelain and Toughened Glass Suspension Insulator Units: Each class of suspension-type insulator units shall be tested in accordance with ANSI C29.2 for the mechanical and electrical strength ratings required under the specifications and as follows:

      1) Design Tests:

         a. Low-Frequency Dry Flashover: ANSI C29.2, paragraph 8.2.1.

         b. Low-Frequency Wet Flashover: ANSI C29.2, paragraph 8.2.2.

         c. Critical Impulse Flashover – Positive and Negative: ANSI C29.2, paragraph 8.2.3.

         d. Radio-Influence Voltage: ANSI C29.2, paragraph 8.2.4.

         e. Thermal-Mechanical Performance Test: Ten insulators per lot shall be tested in accordance with IEC Publication 60575. Each value measured shall not be lower than the mechanical and electrical strength required by these specifications.

         f. Thermal Shock: ANSI C29.2, paragraph 8.2.6.

         g. Residual-Strength: ANSI C29.2, paragraph 8.2.7.

         h. Impact: ANSI C29.2, paragraph 8.2.8.

         i. Cotter Key Test: ANSI C29.2, paragraph 8.2.9.

         j. Cement Expansion: ANSI C29.2, paragraph 8.2.10.

      2) Quality Conformance Test:

         a. Visual and Dimensional Tests: ANSI C29.2, paragraph 8.3.1.
         b. Porosity Tests: ANSI C29.2, paragraph 8.3.2. Test three samples per lot.
         c. Galvanizing Tests: ANSI C29.2, paragraph 8.3.3.
         d. Combined Mechanical and Electrical Strength Tests: ANSI C29.2, paragraph 8.3.4.
         e. Puncture Tests: ANSI C29.2, paragraph 8.3.5.

3) Routine Tests: A Certificate of Compliance stating the following routine tests have been performed is required.

   a. Cold-to-Hot Thermal Shock Test: ANSI C29.2, paragraph 8.4.1. (Toughened glass suspension insulators only.)

   b. Hot-to-Cold Thermal Shock Test: ANSI C29.9, paragraph 8.4.2. (Toughened glass suspension insulators only.)

   c. Tension-Proof Tests: ANSI C29.2, paragraph 8.4.3.

   d. Flashover Tests: ANSI C29.2, paragraph 8.4.4.

(2) Porcelain Line Post Insulators: Test post-type insulators in accordance with ANSI C29.7.

1) Design Tests:

   a. Low-Frequency Dry Flashover Test: ANSI C29.7, paragraph 8.2.1.
   b. Low-Frequency Wet Flashover Test: ANSI C29.7, paragraph 8.2.2.
   c. Critical Impulse Flashover Tests – Positive: ANSI C29.7, paragraph 8.2.3.
   d. Radio-Influence Voltage Test: ANSI C29.7, paragraph 8.2.4.
   e. Thermal Shock Test: ANSI C29.7, paragraph 8.2.5.

2) Quality Conformance Tests

   a. Visual and Dimensional Tests: ANSI C29.7, paragraph 8.3.1.
   b. Porosity Test: ANSI C29.7, paragraph 8.3.2.
   c. Galvanizing Test: ANSI C29.7, paragraph 8.3.3.
   d. Cantilever-Strength Test: ANSI C29.7, paragraph 8.3.4.

3) Routine Tests

   a. Routine Flashover Test: ANSI C29.7, paragraph 8.4.1.
   b. Routine Cantilever Test: ANSI C29.7, paragraph 8.4.2.

(3) Polymer-Fiberglass Suspension Insulators: Insulators shall be tested in accordance with ANSI C29.11 as follows:

1) Prototype Tests:

   a. Tests on Interfaces and Connection of End Fittings: ANSI C29.11, paragraph 7.1.
   b. Core Time-Load Test: ANSI C29.11, paragraph 7.2.
   c. Housing Tracking and Erosion Test: ANSI C29.11, paragraph 7.3.
   d. Core Material Tests: ANSI C29.11, paragraph 7.4.

2) Design Tests:

   a. Lightning Critical-Impulse Flashover Test: ANSI C29.11, paragraph 8.1.
   b. Alternating-Voltage Rated Dry Flashover Test: ANSI C29.11, paragraph 8.2.
   c. Switching Critical-Impulse Flashover Test: ANSI C29.11, paragraph 8.3.

3) Sample Test:

   a. Verification of Dimensions: ANSI C29.11, paragraph 9.2.

b. Verification of Locking System, if Ball and Socket Fittings are furnished: ANSI C29.11, paragraph 9.3.

c. Mechanical Load Test: ANSI C29.11, paragraph 9.4.

d. Galvanizing Test: ANSI C29.11, paragraph 9.5.

4) Routine Tests:

a. Mechanical Tests: ANSI C29.11, paragraph 10.1.
b. Visual Examination: ANSI C29.11, paragraph 10.2.

(4) Polymer-Fiberglass Line Post Insulators: Insulators shall be tested in accordance with ANSI C29.17 as follows:

1) Prototype Tests:

a. Tests on Interfaces and Connection of End Fittings: ANSI C29.17, paragraph 7.1.
b. Assembled Core Load Tests: ANSI C29.17, paragraph 7.2.
c. Housing Tracking and Erosion Test: ANSI C29.17, paragraph 7.3.
d. Core Material Tests: ANSI C29.17, paragraph 7.4.

2) Design Tests:

a. Low Frequency Wet Flashover Test: ANSI C29.17, paragraph 8.1.
b. Low Frequency Dry Flashover Test: ANSI C29.17, paragraph 8.2.
c. Lightning Critical-Impulse Tests: ANSI C29.17, paragraph 8.3.
d. Radio-Influence Voltage and Visible Corona Test: ANSI C29.17, paragraph 8.4.

3) Sample Test:

a. Verification of Dimensions: ANSI C29.17, paragraph 9.2.
b. Galvanizing Test: ANSI C29.17, paragraph 9.3.
c. Cantilever-Strength Tests: ANSI C29.17, paragraph 9.4.
d. Specified Tensile Load Test: ANSI C29.17, paragraph 9.5.

4) Routine Tests:

a. Tensile Lead Tests: ANSI C29.17, paragraph 10.1.
b. Visual Examination: ANSI C29.11, paragraph 10.2.

3. ASSEMBLIES AND HARDWARE:

(1) Suspension Clamps: Tests shall be performed which show that suspension clamps meet the requirements of draft ANSI C135.61D5.

(2) Assembly Coupling Hardware: Tests shall be performed which show that assembly coupling hardware meet the requirements of draft ANSI C135.61D5.

(3) Compression Dead Ends: Tests shall be performed which show that compression dead ends develop not less than 95 percent of the ultimate strength of the conductor.

(4) Implosive Dead Ends: Design tests shall be performed which show that implosive dead ends develop no less than 100 percent of the ultimate strength of the conductor with which they are to be used.

(5) Strain Clamps: Tests shall be performed which show that strain clamps develop not less than 85 percent of the ultimate strength of the conductor.

(6) Grading Ring Design Test: Grading rings shall be tested using a mechanical shaker with at least a 1-inch stroke at the grading ring and a frequency of 3 cycles per second for a duration of 2,000,000 cycles. Movement shall be along the long axis of the insulator. The test shall reflect the manufacturer's recommended method for attaching the grading ring to the insulator. The grading ring shall be attached to the insulator and the insulator attached to the shaker in a vertical position. The test shall be considered successful if no movement is detected in the ring in relationship to the insulator and there is no physical damage to the grading ring and the attachment assembly.

(7) Insulator Assembly Corona Test: One complete insulator assembly of each type for use at 345-kV line-to-line and above shall be tested in accordance with the following criteria:

Each conductor or subconductor may be simulated by conductor or bar no larger than the conductor or subconductor diameter plus 0.10 inches. The test shall duplicate the conductor arrangement and insulator assembly in dimensions and hardware material used.

The test shall be conducted with the assemblies installed not more than the specified distance from a grounded plane.

The insulator assemblies shall be subjected to a 50-Hz or 60-Hz voltage to determine that the corona extinction voltage level is not less than the specified voltage. No correction shall be made for climatic conditions. The line-to-ground test voltage may be reduced by 3 percent for each 1,000 feet that the elevation of the test site exceeds mean sea level.

The corona detection device shall be a light amplifier with a gain of 30,000 or more. The test specimen image when viewed shall be no smaller than 20 percent of the light amplifier screen. The device shall be able to detect light generated by corona in the visual spectrum.

In a dark laboratory, the test specimen shall be energized with a high enough voltage to create a detectable, glow corona on the specimen with the light amplifier. This is to prove the detection system is working.

In a dark laboratory, with an applied voltage high enough to create corona and the ground plane in place, the voltage shall be lowered to the specified voltage. The test specimen shall be viewed from at least two directions approximately 180° apart on the plane of the building floor that has the best view of the flat plane or planes of the test specimen. There shall be no visible corona on the test specimen when viewed with the light amplifier.

10.3.4 INSTALLATION:

At least 2 weeks prior to installation, furnish two copies of manufacturer's assembly and installation instructions to the COR and assemble each type of conductor insulator assembly to assure that all pieces fit together as required. Assembly shall be complete with suspension clamp or compression dead end. Verify that the hardware will allow free conductor motion and will not bind up. All hardware pins shall be bolt, nut, and stainless steel cotter key. The Contractor shall verify that the assemblies will connect to the structure attachment points with the correct horizontal or vertical orientation.

All insulators shall be wiped clean with a nonabrasive cloth, as approved by the COR at the time of installation. The porcelain or glass portions shall be bright and the metal portions free from dirt. Cracked or chipped insulators and insulators with bent cotter keys or with loose cement shall not be installed.

Insulators that are cracked, chipped, or damaged in any way shall be replaced with sound units.

Special precautions shall be used during handling, transporting, and installation of polymer-fiberglass insulators. Do not lay them on the ground unprotected or drag them along the ground during structure installation. During installation of insulators or structures, care must be taken that no impact, cantilever, or torsion loads are applied to the insulators as a result of binding in any part of the assembly. Any polymer-fiberglass insulator with damage to the sheds, sheath, or which is observed to have had an impact, cantilever, or torsion load applied shall be replaced by and at the expense of the Contractor.

The following imperfections shall be acceptable on the polymer-fiberglass insulator surface: Superficial defects of an area less than 25 square mm (total defective area not to exceed 2 percent of the total insulator surface) and less than 1 mm in depth.

Where practical, the nuts and cotter keys used in assemblies shall be faced in toward the structure to facilitate removal during hot line maintenance. This does not apply to cotter keys in the individual insulator units.

Each completed suspension insulator string shall be installed on the conductor and adjusted so as to hang in a vertical plane through the axis of the structures after the conductors are sagged and clipped in. The clipping in of conductors shall then be completed and all nuts tightened according to manufacturer's recommendations.

Compression dead ends and jumper connectors, and strain clamps in tension assemblies shall be installed on the conductor in accordance with the manufacturer's recommendations. Furnish necessary tools and joint-inhibitor compound.

Implosive dead ends and jumper connectors shall be applied to the conductor and inspected in accordance with the manufacturer's specific installation procedure. Implosive dead ends do not require the cleaning of the conductor nor joint inhibitor compound. Implosive dead ends may be installed on the ground supported by a tripod or in the air. The Contractor must be aware of the peak noise level generated at the time of implosion and take necessary precautions to ensure that personnel are adequately protected and all pertinent regulations adhered to. Follow all local blasting regulations and all safety requirements as described in the "Safety and Health" paragraph of the "General Requirements" Standards. Coordinate all detonations with the COR.

Jumper connector pads shall be attached to the line side of dead end pads, and the jumper connector bolt shall be inserted from the line end toward the structure end of the assembly where such installation will minimize corona onset and radio-influence voltages. Bolts shall be tightened to the torque value as recommended by the manufacturer.

SECTION 10.4--OVERHEAD GROUND WIRE ASSEMBLIES

10.4.1 OVERHEAD GROUND WIRE ASSEMBLIES, GENERAL:

Typical steel strand overhead ground wire assemblies for the structures are shown on drawings 41 1018 and 41 1019. Typical optical overhead ground wire (OPGW) assemblies are shown on drawing 41 1031.

10.4.2 MATERIAL:

1. GENERAL: Turnbuckles may be used at the Contractor's option and at no additional cost to Western, as part of tension assemblies.

2. SUSPENSION CLAMPS – STEEL STRAND OVERHEAD GROUND WIRE: Suspension clamps shall be of malleable iron or high-strength forged steel and galvanized. The clamps shall be sized for use with the specified steel-strand overhead ground wires without armor rods installed, unless otherwise specified, and shall be suitable for use on vertical line angles from 3° to a maximum of 35°. Suspension clamps shall have an ultimate strength of 15,000 pounds. Overhead ground wire supporting seat shall have sufficiently large longitudinal radii to prevent concentration of vibration bending and tension stresses at the overhead ground wire take off points. Centers of radii of the overhead ground wire seat shall be located on vertical lines extended below the clamp and no closer to the center of clamp than the outside edges of the U-bolts. Clamp bore diameter for use with the overhead ground wire shall be the diameter of the overhead ground wire with a tolerance of plus 0.34 inch. Each clamp shall be complete with at least two U-bolts, keeper piece, and a 5/8-inch-diameter bolt having a hexagonal head and provided with a hexagonal nut and with stainless steel self-locking-type cotter key. Unthreaded length of the bolt shall be adequate to ensure free rotation of the bolt with the nut run onto the bolt to the limit permitted by the threaded portion of the bolt. Cable seat and keeper piece shall be smooth and free from burrs. Each suspension clamp assembly shall be capable of holding the overhead ground wire without slipping under an unbalanced tension of 4,000 pounds.

3. SUSPENSION CLAMPS – OPTICAL OVERHEAD GROUND WIRE: Suspension clamps shall be specifically designated for OPGW. Suspension clamps shall be of malleable iron or high-strength forged steel and galvanized. The clamps shall be sized for use with the specified OPGW and shall be suitable for use on vertical line angles to a maximum of 30°. Suspension clamps shall have an ultimate strength of 15,000 pounds. OPGW wire supporting seat shall have sufficiently large longitudinal radii to prevent concentration of vibration bending and tension stresses at the OPGW take off points. Centers of radii of the OPGW seat shall be located on vertical lines extended below the clamp and no closer to the center of clamp than the outside edges of the U-bolts. Each clamp shall be complete with at least two U-bolts, keeper piece, and a 5/8-inch-diameter bolt having a hexagonal head and provided with a hexagonal nut and with stainless steel self-locking-type cotter key. Unthreaded length of the bolt shall be adequate to ensure free rotation of the bolt with the nut run onto the bolt to the limit permitted by the threaded portion of the bolt. Cable seat and keeper piece shall be smooth and free from burrs. Each suspension clamp assembly shall be capable of holding the overhead ground wire without slipping under an unbalanced tension of 3,000 pounds. Armor grip suspension (AGS) assemblies can be used if correctly sized but the hardware may change from the standard assemblies drawing. The Contractor shall submit attachment assemblies with hardware for approval.

4. TENSION ASSEMBLY – OPTICAL OVERHEAD GROUND WIRE: Tension and dead end clamps shall be specifically designated for OPGW. Each dead end assembly shall develop no less than 95 percent of the ultimate strength of the overhead ground wire.

5. ASSEMBLY COUPLING HARDWARE: Material and methods used in the fabrication of assembly coupling hardware shall be selected to provide good toughness and ductility. Each component part of the coupling hardware used in the assemblies shall also be designed such that permanent deformation or yield does not occur at less than two-thirds of its ultimate rated breaking strength.

Assembly coupling hardware shall have a rated ultimate breaking strength equal to or greater than the assembly ultimate strength. The assembly coupling hardware shall be galvanized and shall be complete with nuts, bolts, and self-locking stainless steel cotter keys.

Bolts, nuts, and locknuts shall be galvanized steel. Bolts shall conform to SAE J429, Grade 5 or 8, and be made of a grade of steel commensurate with the ultimate strength specified for the hardware.

Metal shall be free from burrs, sharp edges, lumps, and dross, and smooth so that interconnecting parts will fit properly and so that the parts may be assembled and disassembled readily. Threaded parts shall be galvanized after being threaded and excessive zinc removed from the threads. Nuts and locknuts shall be retapped after being galvanized and shall be capable of being threaded the entire length of the threads without the use of a wrench.

6. COMPRESSION DEAD ENDS: Compression dead end for steel strand overhead ground wires shall consist of a galvanized-steel eye and an aluminum sleeve or consist of a stainless-steel sleeve connected to a galvanized-steel clevis, with the clevis connected to a galvanized-steel eye. Each dead end assembly shall develop no less than 95 percent of the ultimate strength of the overhead ground wire.

7. IMPLOSIVE DEAD ENDS: Implosive dead ends may be used in place of or in combination with compression dead ends as approved by the COR. If implosive dead ends are used, install in accordance with manufacturer's recommendations. Dead ends shall be as manufactured by Implo Technologies, Inc., 73 Hemingway Crescent, Unionville, Ontario, CANADA L3R 2S4, or equal.

   Implosive dead end for overhead ground wires shall consist of one-piece, galvanized-steel eye, and sleeve. The required implosive charge shall be mounted on the dead end, and the placement location of the detonator shall be clearly indicated. Each dead end assembly shall develop no less than 95 percent of the ultimate strength of the overhead ground wire with which it is used.

8. INSULATORS: Overhead ground wire insulators for use with the suspension and tension assemblies shall be wet porcelain or polymer-fiberglass, as specified, of the clevis type with a combined mechanical and electrical or SML strength as specified.

10.4.3 TESTS:

1. SUSPENSION CLAMPS: Tests shall be performed which show that suspension clamps meet the requirements of draft ANSI C135.61D5.

2. ASSEMBLY COUPLING HARDWARE: Tests shall be performed which show that assembly coupling hardware meet the requirements of draft ANSI C135.61D5.

3. COMPRESSION AND IMPLOSIVE DEAD ENDS: Compression and implosive dead ends shall undergo tests which show that the dead ends develop not less than 95 percent of the ultimate strength of the overhead ground wire.

4. INSULATORS: Test insulator units in accordance with all the requirements of ANSI C29.2. Perform tests required in accordance with Section 10.3.3.2.

10.4.4 INSTALLATION:

1. GENERAL: Assemblies used for steel strand and optical overhead ground wires shall be suspension or tension types as specified on material attachment drawings or noted on the plan and profile drawings.

At least 2 weeks prior to installation, furnish two copies of manufacturer's assembly and installation instructions to the COR, and assemble each type of overhead ground wire assembly to assure that all pieces fit together as required. Assembly shall be complete with suspension clamp, tension dead end or compression dead end. Verify that the hardware will allow free overhead ground wire motion and will not bind up. All hardware pins shall be bolt, nut, and stainless steel cotter key. The Contractor shall verify that the assemblies will connect to the structure attachment points with the correct horizontal or vertical orientation.

Each completed suspension assembly shall be installed on the overhead ground wire and adjusted so as to hang in a vertical plane through the axis of the structures after the overhead ground wires are clipped in. The clipping in of overhead ground wires shall then be completed and all nuts tightened according to manufacturer's recommendations.

2. COMPRESSION DEAD ENDS: Compression dead ends in tension assemblies shall be applied to the steel strand overhead ground wires in accordance with the manufacturer's recommendations. Furnish all necessary tools and joint-inhibitor compound.

3. IMPLOSIVE DEAD ENDS: Implosive dead ends shall be applied to the steel strand overhead ground wire and inspected in accordance with the manufacturer's specific installation procedure. Implosive dead ends do not require joint inhibitor compound. Implosive dead ends may be installed on the ground supported by a tripod or in the air. The Contractor must be aware of the peak noise level generated at the time of implosion and take necessary precautions to ensure that personnel are adequately protected and all pertinent regulations adhered to. Follow all local blasting regulations and all safety requirements as described in the "Safety and Health" paragraph of the "General Requirements" Standards. Coordinate all detonations with the COR.

4. TURNBUCKLES: Turnbuckles shall be initially installed such that not more than one-half of the allowable adjustment in either direction is used.

SECTION 10.5--ACCESSORIES FOR STRUCTURES

10.5.1 GENERAL:

Coordinate between the steel/concrete structure and insulator manufacturers to ensure that the mounting plates and insulator base mounts mate satisfactorily.

10.5.2 STRUCTURE GROUNDING:

Structure grounding shall be provided as follows:

1. WOOD STRUCTURES:

   (1) Material:

      1) Structure Ground Wire: Wire shall be No. 2 AWG, 30-percent conductivity, annealed copper-clad wire.

      2) Parallel Groove Clamps: Parallel groove clamps for connecting ground wires shall be copper alloy, smooth groove, with copper alloy bolts, and not less than two bolts each.

      3) Staples: Hot-dipped, galvanized barbed staples. The staples shall be not less than 2 inches long and equal to Joslyn Manufacturer's Catalog No. J7672.

      4) Ground Rods: If alternate backfill as described in the "Wood Pole Structures" Standards is used, ground rods shall be used for structure grounding. Ground rods shall be copper-clad steel of circular cross section, 5/8 inch in diameter, and 8 feet long. Ground rods shall be MacGraw-Edison Catalog No. DN3C8, or equal.

      5) Pole Bottom Ground Plates: Ground plates shall be installed on each wood pole. Ground plates shall be solid copper and 10 inches in diameter. The ground plates shall be Blackburn Catalog No. GP110, or equal.

      6) Bonding Clip for Structure Ground Wire: Bonding clips for structure ground wire shall be suitable for the copper-clad ground wire. Bonding clip shall be Brooks Manufacturing BC series, Hughes Brothers No. 2727, or equal.

      7) Assembly and Installation: Structure grounding, including ground wire, shall be installed as shown on drawing 41 1012 and as directed by the COR. Bury structure ground wire for pole-to-pole ties a minimum of 18 inches in uncultivated land and 24 inches in cultivated land. Ground wire shall not be spliced.

2. STEEL OR CONCRETE POLE STRUCTURES:

   (1) Material and Installation: Material and installation of grounding for steel or concrete pole structures shall be in accordance with drawing 41 1015.

10.5.3 GROUND RESISTANCE MEASUREMENTS:

When specified, ground resistance measurements shall be made at each structure before the static wires are installed according to the most recent IEEE Guide for measuring ground resistance Standard 81. These readings shall be made using a "Ground Megger" or other instrument approved by the COR. A list of readings and where each was taken shall be furnished to the Electrical Engineer and the COR.

The final ground resistance at each structure shall be 25 ohms or less. If the ground resistance measurements do not meet this criteria, ground rod assemblies or counterpoise shall be installed in accordance with drawing 41 2034 and as directed by the COR.

List of readings furnished to Western shall include:

- Station number.
- Structure number.
- Initial ground resistance.
- Corrective action (ground rod or counterpoise).
- Final ground resistance.

10.5.4 GROUND ROD ASSEMBLIES:

Structure ground rod assemblies shall be installed in accordance with drawing 40 1015 in order to secure the desired ground resistance. Ground rod assemblies shall be installed as directed by the COR.

10.5.5 STRUCTURE SIGNS:

1. STRUCTURE NUMBER SIGNS: The structure number signs, with the structure numbers as designated on the plan and profile drawings, shall be attached to the structures approximately 10 feet above the ground surface on the ahead and back span face of structure.

   (1) Steel Pole Structures: Signs and backer plates shall be fabricated and attached to the structures in accordance with drawing 41 9027. Holes shall not be drilled into tubular steel structures.

   (2) Wood Pole Structures: Wood pole structure number signs shall consist of two levels of numbers, one directly above the other. The upper number shall indicate the station mile, and the lower number shall indicate the number of the structure within that station mile. The numbers shall be 6-inch-high aluminum, aluminum alloy, or stainless steel attached with galvanized nails.

   (3) Lattice Steel Structures: The structure number signs shall be fabricated and attached to the structures in accordance with drawing 41 9007.

2. AERIAL PATROL MILE MARKER SIGNS: The first structure of each mile section of line shall be identified with two aerial patrol mile marker signs, one on the ahead and one on the back span face of the wood pole structure or mounting plate of the steel pole/lattice steel structure.

   (1) Steel Pole Structures: Signs shall be fabricated and attached in accordance with drawing 41 9027.

   (2) Wood Pole Structures: Signs shall be fabricated and attached in accordance with drawing 41 9004. If an aerial patrol mile marker sign falls on a structure that does not have a crossarm, 6-inch-high aluminum, aluminum alloy, or stainless steel, numbers shall be attached similar to numbers on wood pole structure number signs in lieu of using a rectangular steel sign.

   (3) Lattice Steel Structures: Signs shall be fabricated and attached in accordance with drawing 41 9005.

3. AERIAL PATROL WARNING SIGNS: Aerial patrol warning signs, located as designated on the plan and profile drawings and described in the "Line Markers" paragraph of the "Conductor, Overhead Ground Wire, and Accessories" Section, shall be fabricated and mounted in accordance with drawing 41 9026.

4. DANGER SIGNS: Mount two danger signs on each lattice-type steel structure in accordance with drawing 41 9008.

SECTION 10.6--CONDUCTOR, OVERHEAD GROUND WIRE, AND ACCESSORIES

10.6.1 CONDUCTORS:

1. MATERIAL:

(1) Conductor: ACSR in accordance with requirements of ASTM B 232.

1) General Characteristics: Each individual wire entering into construction of the completed conductor shall conform to ASTM B 230. Core wire shall be Class A, galvanized-steel wire conforming to ASTM B 498 and ASTM B 500.

If the conductor is specified as nonspecular type, it shall have the outer surface treated to produce a dull finish.

2) Raised Strand Limitation: Conductors shall be designed and fabricated to ensure that all strands in the outer layer will remain the same distance (within a plus tolerance of 25 mils) from the center of the conductor before and after the conductors are strung.

3) Packing and Shipping: Completed conductor shall be furnished on reels sufficiently sturdy in construction to withstand any normal service incident to shipping, hauling, and field erection. No random length shall be wound on the same reel with a specified standard length, and reels on which random lengths are furnished shall be of the same overall width and have bushings of the same inside sleeve diameters as the reels for the specified standard conductor lengths.

(2) Conductor: ACSS in accordance with requirements of ASTM B 856 or ASTM B 857.

1) General Characteristics: Each individual wire entering into construction of the completed conductor shall conform to ASTM B 609 (in the case of trapezoidal conductor, after stranding the trapezoidal wires shall conform to ASTM B 609 except for the shape and diameter tolerance) and B 856 (or ASTM B 857 for trapezoidal construction). Core wire shall be Class A, Zinc-5% aluminum-mischmetal alloy-coated steel strand conforming to High-Strength grade in accordance with ASTM B 500 and ASTM B 802 or ASTM B 803 and suitable for continuous operating temperatures up to 250°C.

2) The conductor shall be stranded prior to annealing to assure that the aluminum strands lay tightly around the steel core and surrounding aluminum layers.

If the conductor is specified as nonspecular type, it shall have the outer surface treated to produce a dull finish in accordance with the requirements of ANSI C7.69.

3) Raised Strand Limitation: Conductors shall be designed and fabricated to ensure that all strands in the outer layer will remain the same distance (within a plus tolerance of 25 mils) from the center of the conductor before and after the conductors are strung.

4) Packing and Shipping: Completed conductor shall be furnished on reels sufficiently sturdy in construction to withstand any normal service incident to shipping, hauling, and field erection. No random length shall be wound on the same reel with a specified standard length, and reels on which random lengths are furnished shall be of the same overall width and have bushings of the same inside sleeve diameters as the reels for the specified standard conductor lengths.

(3) Compression Conductor Joints and Repair Sleeves: Joints for splicing conductor shall be compression type, include an overall aluminum alloy sleeve, and develop not less than

95 percent of the ultimate strength of the conductor. Conductivity of the completed splices shall not be less than that of the conductor.

Compression repair sleeves may be used in lieu of compression joints to repair minor damage to conductor, provided that not more than two of the aluminum strands in the outer layer are broken and there has been no damage to strands in other layers.

(4) Implosive Conductor Joints and Repair Sleeves: Implosive joints may be used in place of or in combination with compression joints as approved by the COR. Install joints and sleeves in accordance with manufacturer's recommendations. Joints and sleeves shall be as manufactured by Implo Technologies, Inc., 73 Hemingway Crescent, Unionville, Ontario, CANADA L3R 2SR, or equal.

Implosive joints for splicing conductor shall include an overall aluminum sleeve and develop no less than 100 percent of the ultimate strength of the conductor with which they are to be used. Conductivity of the completed splices shall not be less than that of the conductor. The required implosive charge shall be mounted on the joint and sleeve, and the placement location of the detonator shall be clearly indicated.

Implosive repair sleeves can be used in lieu of implosive joints to repair damage to the conductor provided that the steel core is not damaged and that the aluminum strands are damaged over a length of no more than 4 inches. Sleeves shall develop no less than 100 percent of the ultimate strength of the aluminum strands of the conductor.

2. TESTS:

(1) Conductor: During fabrication, physical tests shall be made in accordance with the requirements of ASTM B 232, ASTM B 498, ASTM B 500, ASTM B 609, ASTM B 802, and ASTM B 803, as applicable. In the event that the conductor is fabricated by two or more manufacturers, tests shall be performed by each manufacturer. Submit certification that the conductor meets all requirements of ASTM B 232, ASTM B 230, ASTM B 498, ASTM B 500, ASTM B 609, ASTM B 802, and ASTM B 803 in accordance with the "Drawings, Data, and Test Reports" Section.

(2) Compression Conductor Joints: Conductor joints shall undergo tests which show that the joints develop not less that 95 percent of the ultimate strength of the conductor.

(3) Implosive Conductor Joints: Conductor joints shall undergo tests which show that the joints develop not less than 100 percent of the ultimate strength of the conductor.

3. INSTALLATION:

(1) General: Equipment and methods used for stringing conductors shall be subject to approval of the COR; ensure that conductors will not be scratched, grooved, kinked, twisted, abraded, or otherwise deformed; and such that support structures will not be damaged. If the conductors are damaged, repair or replace the damaged sections in a manner approved by the COR and at no additional cost to Western. All sections of conductors damaged by the application of gripping attachments shall be repaired or replaced before the conductors are sagged in place.

Conduct stringing operations so that at no time will any suspension attachment be subjected to longitudinal loads and any tension tower be subjected to torsion resulting from longitudinal loads on opposing faces at opposite ends of crossarms. Vertical angles of pulling lines shall be such as to minimize, within practical limits, the vertical loading in structures and shall be subject to approval of the COR.

(2) Safety Precautions: Procedures used for stringing and sagging conductors, including special safety precautions when stringing adjacent to energized facilities and at powerline crossings, shall meet the minimum requirements set forth in the "Safety and Health" Section of the "General Requirements" Standards.

(3) Existing Energized Lines: Portions of the transmission line may closely parallel existing energized transmission lines. During stringing operations, a buildup of voltage due to energized parallel facilities can result in safety hazards. The Contractor shall be responsible for familiarizing himself with the area and shall implement adequate safety measures when stringing conductors adjacent to energized facilities, particularly those located within 2 miles of the transmission line.

(4) Stringing Method: Conductors shall be strung by the controlled-tension method, except in certain isolated spans upon approval from the COR, using neoprene-lined, double-bull-wheel-type tension stringing equipment.

(5) Stringing Equipment: Pulling lines shall be of sufficient length to avoid applying undue strain to the insulators and structures and shall be connected to the conductors with swivel connectors and stocking-type grips as directed by the COR. The end of the grips (sock) shall be taped to the conductor so that the grips will run freely in the sheaves. Conductor splices shall not be passed through a sheave except as specifically permitted by the COR. Reel stands shall be heavily constructed, and provisions shall be made for braking the reels. Conductor shall not be dragged over ground, rock, or fence wires, nor over any objects which may injure the conductor. Guards shall consist of material over which the conductor may slide without injury and shall be subject to the approval of the COR.

Implosive joints may be pulled through stringing sheaves as recommended from manufacturer's stringing charts and as approved by the COR. Length of pull shall be determined by the stringing sheave characteristics, stringing tension, weight span, and deflection angle.

(6) Stringing Sheaves: Design, size, material, and points of attachment of the stringing sheaves, and vertical angles of running lines, shall be subject to the approval of Western. Minimum diameter of the sheaves at the bottom of the groove shall be at least 12 times the diameter of the conductor with which it is used, and the size and shape of the groove shall conform to the conductor manufacturer's recommendations. Manufacturer’s recommendations may require 20 times the diameter sheaves for the first one of the set up. Sheaves shall be equipped with high-quality ball or roller bearings and shall have neoprene-lined grooves.

If implosive joints are to be passed through the stringing sheaves, obtain the implosive joint manufacturer's recommendation for sheave size. The sheaves must be compatible with the joints and allow the joint to pass through without binding. The diameter of the sheaves at the bottom of the groove will be from 12 to 20 times the diameter of the conductor. Sheaves must be designed to withstand the possible wedging load imposed by the implosive joint. There must be enough space between the sheave and the supporting frame to allow free passage of the connector.

(7) Time Allowed for Stringing and Clipping: Once stringing has started for any wire setup, all the subconductors for all the conductor phases in that setup shall be completely pulled into the snubs during the same calendar day, and they shall all be kept at the same reduced sag until they are pulled to final tension. Conductors shall not be allowed to hang in the stringing blocks more than 24 hours before being pulled to the specified sag. After being sagged, conductors shall be allowed to hang in the stringing blocks for not less than 2 hours before being clipped in, to permit the conductor tension to equalize. Total time which the conductors are allowed to remain in the stringing blocks before being clipped in shall not be more than 72 hours unless approved by the COR. Less time shall be allowed for fiber optic overhead

ground wires in accordance with the manufacturer's recommendations. Notwithstanding the 72-hour limitation, pulling of any third conductor setup will not be allowed until the corresponding first conductor setup is clipped in.

(8) Tensioning Equipment: In order to minimize the danger of failure, the design of the tension equipment shall be such that when the desired tension is obtained, the same constant tension will be held so long as the brakes are left at this setting, whether the brakes are actuated manually, pneumatically, hydraulically, or electrically. Equipment shall be so designed that there can be no conduction of heat generated by the braking action of the bull wheels. There shall be slight mechanical braking on the reels to prevent loose conductor between the reels and the bull wheels. Bull wheels shall have a neoprene lining not less than 1/4 inch thick and shall have a minimum outside diameter of 42 inches.

A minimum of four and one-half turns of conductor shall be placed around the bull wheels. The equipment shall be capable of maintaining a continuous tension equal to the initial load tension of the conductor at 30°F for NESC Light loading, 15°F for NESC Medium loading and 0°F for NESC Heavy loading. When stringing conductors by the controlled-tension method, the sag in each conductor shall be maintained at least 20 percent greater than the sags specified in the stringing sag tables, prior to final adjustment of the sag before clipping in the conductors.

(9) Sagging Conductors: Conductors shall not be prestretched and shall be sagged in accordance with sag tables which will be furnished to the Contractor after Notice to Proceed has been issued. Length of conductor sagged in one operation shall be limited to the length that can be sagged satisfactorily but shall not exceed 16,000 feet unless approved by the COR. In sagging one-reel lengths, the sag of two spans shall be checked. The length of the spans used for checking shall be approximately equal to the ruling span. Sag of spans on both sides of all horizontal angles of more than 10° shall be checked. After the conductors have been pulled to the required sag, intermediate spans shall be inspected to determine whether the sags are uniform and correct.

Sagging operations shall not be carried on when, in the opinion of the COR, wind, extremely low temperature, or other adverse weather conditions prevent satisfactory sagging. A tolerance of plus or minus 1/2-inch sag per 100 feet of span length, but not to exceed 6 inches in any one span, will be permitted when stringing is being done at temperatures of 0°F and above, and a tolerance of plus or minus 1/4-inch sag per 100 feet of span length, but not to exceed 3 inches in any one span, will be permitted when stringing is being done at temperatures below 0°F; provided, that all conductors in the span assume the same sag and the necessary ground clearance is obtained; provided further, that the conductor tension between successive sagging operations is equalized so that the suspension insulator assemblies will assume the proper position when conductor is clipped in. After clipping in is completed, all suspension insulator strings shall hang vertically. Each phase of conductor shall be tied off, both ahead and back, at the last clipped structure of each sag setup, which tie-offs shall be left in place until the tie-offs of the subsequent setup are in place. Check the sag at all points to be checked. Furnish the necessary personnel for signaling and climbing purposes. The Contractor shall target all spans for sagging, and the COR may verify the sag at any point with the Contractor's equipment. At all suspension or tension structures, attach conductors to the insulator assemblies by suspension clamps or dead end fittings, in accordance with the "Conductor Insulator Assemblies" Subdivision. Conductor arrangements throughout the line shall be as shown on the plan and profile sheets or as specified by the COR.

(10) Cleaning Conductor: During stringing operations, remove dirt or grease that can be readily observed on the conductors by cleaning with clean cloths or method approved by the manufacturer. Proper precautions shall be taken by personnel cleaning the conductor to protect themselves against the toxic and drying actions of the chemical being used. The

cleaning apparatus itself shall be kept clean such that particles collected during the conductor cleaning process do not scratch or mar subsequent conductor.

(11) Compression Dead Ends, Joints, and Repair Sleeves: Compression joints and repair sleeves shall be located at least 25 feet away from the structures. No joints or repair sleeves shall be used in spans crossing over interstate highways, railroads, communication lines, utility lines of voltages greater than 15 kV or in the two spans adjoining the crossing span, without approval of the COR. To develop rated mechanical strength and electrical conductivity, the installation of compression joints shall be carefully supervised to ensure that the joints are centered properly. Distance between two joints, between two repair sleeves, or between a joint and a repair sleeve on any one conductor shall not be less than 4,000 feet. Not more than one joint or repair sleeve will be permitted in any one conductor in any one span. No joints will be permitted in the approach span.

Apply conductor dead ends, joints, and repair sleeves to conductors in accordance with the manufacturer's recommendations. Furnish filler paste and all necessary tools, including compressors required for applying compression splices.

Jumper connections shall be made with compression-type jumper connectors which shall be bolted to the compression-type dead ends. After the joints, dead ends, and jumper connectors are compressed onto the conductor, remove, by suitable means, any sharp edges or protrusions formed during the compression operations.

(12) Implosive Fittings: Location of implosive joints and repair sleeves shall be as described in paragraph (11) for compression joints and repair sleeves unless the implosive joint is initially installed and pulled through sheaves, subject to approval by the COR.

Follow the manufacturer's recommendations for installation and inspection of a properly installed fitting. To develop the rated strength and electrical conductivity of connector, inspect the installed implosive fittings to ensure that there is only one shallow lower profile in the middle of the aluminum sleeve and no other indentations or "throats" on the sleeve. After detonation, wipe off any carbon residue with a cloth. Do not use a metal file or mechanical sander.

Implosive fittings do not require joint-inhibitor compound. Implosive fittings may be installed on the ground supported by a tripod or in the air. The Contractor must be aware of the peak noise level generated at the time of implosion and take necessary precautions to ensure that personnel are adequately protected and all pertinent regulations adhered to. Follow all local blasting regulations and all safety requirements as described in the "Safety and Health" Section of the "General Requirements" Standard. Coordinate all detonations with the COR.

(13) Offset Data: If necessary, use insulator offset data so as to ensure that suspension insulator strings hang in a vertical plane through the axis of the structure after the conductors are clipped in. The Contractor shall submit, for review, insulator offset data to the COR and Electrical Engineer at least 2 weeks prior to stringing of each section of line for which offset data is required.

(14) Concrete Footings and Foundations: Stringing shall not begin until 7 days after placement of concrete in footings and foundations.

(15) Damping of Unused Conductor Arms: Conductor arms on steel pole structures which will not be strung shall be damped with weights or other approved means in accordance with the manufacturer's instructions.

10.6.2 STEEL STRAND OVERHEAD GROUND WIRE:

1. GENERAL: Special safety precautions during stringing near energized lines and the equipment methods and limitations used in stringing overhead ground wires shall be the same as those used in stringing conductors as described in the "Conductors" paragraph.

   (1) MATERIAL:

      1) Overhead Ground Wires: 7-wire galvanized-steel strand or Zinc-5% aluminum-mischmetal alloy-coated steel strand conforming to high-strength or extra-high-strength grade, diameter as specified, Class B, steel strand.

      2) The 7-wire galvanized-steel strand shall be in accordance with ASTM A363.

      3) The 7-wire Zinc-5% aluminum-mischmetal alloy-coated steel strand shall be in accordance with ASTM A925.

      4) The completed strand shall be furnished on reels sufficiently sturdy to withstand normal service incident to shipping, hauling, and field erection.

   (2) Overhead Ground Wire Compression Joints: Joints used for splicing or repairing damaged overhead ground wire shall be compression-type, full-tension joints. Use of repair sleeves is not permitted.

   (3) Overhead Ground Wire Implosive Joints: Implosive joints may be used in place of or in combination with compression joints as approved by the COR. If implosive joints are used, install in accordance with manufacturer's recommendations. Joints shall be as manufactured by Implo Technologies, Inc., 73 Hemingway Crescent, Unionville, Ontario, CANADA L3R 2S4, or equal.

2. TESTS:

   (1) Overhead Ground Wire: Perform tests enumerated in ASTM A 363 or ASTM A925 on samples taken at random from 10 percent of the reels of the completed galvanized-steel wire or Zinc-5% aluminum mischmetal alloy-coated wire, respectively. Submit certification that the overhead ground wire meets all requirements of ASTM A 363 or ASTM 925 in accordance with the "Drawings, Data, and Test Reports" Section.

   (2) Overhead Ground Wire Compression Joints: Overhead ground wire joints shall undergo tests which show that the joints develop not less than 95 percent of the ultimate strength of the overhead ground wire.

   (3) Overhead Ground Wire Implosive Joints: Overhead ground wire joints shall undergo tests which show that the joints develop not less than 95 percent of the ultimate strength of the overhead ground wire.

3. INSTALLATION: String overhead ground wires in accordance with conductor installation requirements of the "Conductors" paragraph, except that neoprene-lined or unlined sheaves may be used. Sheaves shall be at least 7-inch diameter at the bottom of the groove.

10.6.3 OPTICAL OVERHEAD GROUND WIRE (OPGW):

1. MATERIAL:

   (1) General Characteristics: OPGW shall be in accordance with requirements of IEEE 1138.

(2) Packing and Shipping: Completed OPGW shall be furnished on reels sufficiently sturdy in construction to withstand any normal service incident to shipping, hauling, and field erection. No random length shall be wound on the same reel with a specified standard length.

2. TESTS: OPGW shall be in accordance with all requirements of IEEE 1138.

3. INSTALLATION: String overhead ground wires in accordance with conductor installation requirements of the "Conductors" paragraph, except that neoprene-lined shall be used.

(1) General: Equipment and methods used for stringing OPGW shall be subject to approval of the COR. Requirements of IEEE 524 and manufacturer's recommendations shall be strictly adhered to. Ensure that OPGW will not be scratched, grooved, kinked, twisted, abraded, or otherwise deformed; and such that support structures will not be damaged.

Conduct stringing operations so that at no time will any suspension attachment be subjected to longitudinal loads and any tension tower be subjected to torsion resulting from longitudinal loads on opposing faces at opposite ends of crossarms. Ensure that suspension structures maintain balanced loads at all times, especially when connecting to floating deadend assemblies. Vertical angles of pulling lines shall be such as to minimize, within practical limits, the vertical loading in structures and shall be subject to approval of the COR.

10.6.4 VIBRATION DAMPERS:

1. GENERAL: Vibration dampers will be required for each span of conductor and overhead ground wire. Using the information provided on specification drawing "Vibration Dampers", the vibration damper manufacturer shall determine at what span lengths two or more dampers are required. Based on these requirements, the Contractor shall determine the total number of dampers needed for the project.

Provide stockbridge-type vibration dampers for conductors and stockbridge-type or spiral vibration dampers for the overhead ground wires.

2. MATERIAL:

(1) General: Dampers shall be suitable for installation directly on the conductors or the overhead ground wires, as applicable, unless armor rods or armor grip suspension (AGS) clamps are specified.

(2) Stockbridge-Type Vibration Dampers: Stockbridge-type vibration dampers shall have an aluminum clamp compressed or cast onto the messenger wire between the weights. Ferrous metal shall be galvanized in accordance with ASTM A 153. All metal shall be free from burrs, sharp edges, lumps, or dross, and shall be smooth so that interconnecting parts will fit properly and so that the parts may be assembled and disassembled readily. Threaded steel parts shall be galvanized after being threaded, and excessive zinc shall be removed from the threads. Damper clamps shall be designed to permit installation and removal by the use of hot line tools.

(3) Spiral Vibration Dampers: Spiral vibration dampers shall have two sections: a damping section and a gripping section. Solid, helical-formed rods shall be made out of noncorrosive material, such as polyvinyl chloride. Rods shall have a surface hardness which does not abrade overhead ground wires.

3. TESTS:

(1) Aeolian Vibration Tests: Tests which demonstrate the effectiveness of vibration dampers in limiting the peak-to-peak bending amplitude, caused by aeolian vibration and as defined in

the IEEE Task Force on Conductor Vibration (IEEE Paper No. 31 CP 65-156), to 10 mils for ACSR conductors and to 15 mils for steel-strand overhead ground wire shall be performed. Optical overhead ground wire vibration damper tests shall be performed in accordance with IEEE 1138.

Perform tests in suspension spans of the ranges shown on the specification drawing "Vibration Dampers", with cable tensions not less than 20 percent of the cable nominal ultimate strengths and with vibration dampers installed at the manufacturer's recommended spacing, for ACSR conductors with diameters within plus or minus 0.25 inch of the diameter of the ACSR cable sizes for which vibration dampers are being furnished and steel strand with diameters within 0.06 inch of the steel-strand overhead ground wire for which vibration dampers are being furnished. These tests shall be conducted with splice/armor rods installed, when rods are specified.

The test for each cable size shall be continued for a minimum of 3 weeks or until a full range of winds between 0 and 20 miles per hour and at right angles to the line have been recorded.

Laboratory tests which are equivalent to the above tests may be performed at the option of the Contractor in accordance with IEEE Std. 664, "IEEE Guide for Laboratory Measurement of the Power Dissipation Characteristics of Aeolian Vibration Dampers for Single Conductors".

Certified reports of previous tests results which show that vibration dampers meet the requirements of these specifications may be substituted for the test results required above.

The Contractor shall provide the "Vibration Damper" drawing to the manufacturer to obtain the vibration damper spacing and number of dampers that has been determined, from tests, to be the most effective in limiting the bending amplitudes as specified above and for all applications listed on the drawing. The Contractor shall determine the necessary vibration damper protection including the total quantity of and catalog number for all vibration dampers needed for the project, the manufacturer's spacing recommendations, and the manufacturer's protectable span length recommendations. The Contractor shall submit the necessary vibration protection, a copy of the "Vibration Damper" drawing marked to reflect the manufacturer's recommendations for all applications shown on the drawing, and results of the required test reports in accordance with the "Drawings, Data, and Test Reports" Section.

4. INSTALLATION: Regardless of the vibration damper manufacturer's protectable span length recommendations, Western requires vibration dampers to be installed on every wire of every span length. The only exception is if the manufacturer does not recommend vibration dampers for approach spans or other slack spans. Install additional vibration dampers in accordance with the manufacturer's recommendations.

   Vibration damper installation shall be completed within 72 hours after conductors or overhead ground wires have been clipped in unless otherwise approved by the COR. Fasten vibration dampers securely to the conductors and overhead ground wires in accordance with the manufacturer's spacing recommendations. Components shall be properly aligned and the installation completed with torque wrenches to ensure that bolts are tightened to the values recommended by the manufacturer. Western will make spot checks of vibration damper installations and, if deficiencies are found, the Contractor shall correct the damper installations to the extent deemed necessary by the COR.

   Hang the stockbridge-type vibration dampers in a vertical plane and ascertain that any drain holes provided in the damper weights are open after installation. Install vibration dampers for conductors so that the head of the clamp bolt faces toward the structure to facilitate removal during hot line maintenance.

10.6.5 HOLD-DOWN WEIGHTS:

1. MATERIAL: Hold-down weights shall be 50 or 100-pound weights suitable for attaching directly to the conductor or overhead ground wire without armor rods. Weights shall be lead conductor weights as manufactured by NH Industries, Inc., P.O. Box 26141, Denver, CO 80226, or equal. For jumper assemblies, weights attached directly to the insulator assembly are acceptable.

2. INSTALLATION: Hold-down weights required on conductors or insulators used as part of jumper assemblies shall be installed at the same time jumper connections and assemblies are installed. Hold-down weight installation for all other applications shall be completed within 72 hours after conductors or overhead ground wires have been clipped in unless otherwise approved by the COR. Hold-down weights shall be assembled and installed in accordance with the manufacturer's recommendations, the plan and profile drawings, and the COR.

   Weights attached directly to the wire shall be installed with an equal number of weights located on each side of the suspension clamp. Install any additional weight on the uphill side of the suspension clamp.

10.6.6 CONDUCTOR SPACER DAMPERS:

1. MATERIAL: Conductor spacer dampers shall be neoprene-lined or elastomeric and suitable for the specified bundle conductor. Spacer dampers shall be suitable for installation directly on the conductors.

   Spacer dampers shall be designed to permit installation and removal by the use of hot line tools.

   The assembly weight shall not exceed 25 pounds. The head of the breakaway bolt or cap screw shall be oriented for ground level viewing.

   The spacer assembly shall be free of visual corona at the specified voltage.

   The energy absorbing assembly shall have the ability to:

   (1) Withstand any heat generated.
   (2) Avoid any displacement in the housings.
   (3) Resist bond failure.
   (4) Avoid any damage which would appreciably decrease the damping efficiency.

   Where elastomers or other nonmetallic material is used, it shall be capable of withstanding conductor temperatures of minus 60 to 180°F without permanent loss of essential properties. The energy absorbing assembly shall be designed to provide effective damping throughout a temperature range of minus 20 to 120°F.

   The elastomer or other energy absorbing assembly shall have adequate resistance to the effects of ozone, ultra violet radiation, and other atmospheric contaminants over the entire temperature range.

   The energy absorbing assembly shall be electrically conductive. The conductivity of the individual components shall be in accordance with the manufacturer's design.

   Nut cracker, hinged, open-end, or boltless type clamps are acceptable provided adequate grip can be maintained on the conductor. Designs requiring a clamping bolt, cap screw, or lock pin shall utilize a single captive fastener. If a special tool is required to fasten the damper, five such tools shall be provided to Western upon completion of damper installation.

Clamping bolts or cap screws shall have a breakaway type head. The breakaway bolt or cap screw shall be furnished with a wrench stop to prevent the socket from engaging the lower head during installation.

All ferrous parts, except Belleville spring washers and parts of stainless steel, shall be galvanized in accordance with ASTM A 153. Hinge pins may also be galvanized in accordance with ASTM A 164, Type LS. Material shall be galvanized after fabrication.

The spacer damper assembly shall have all outside surfaces smooth and all edges and corners well rounded to reduce the formation of corona.

All fillings, loose material, threading lubricants, and all chemical residue or other substances which can cause corrosion shall be cleaned from the spacer damper assemblies.

Each spacer damper assembly shall be marked with letters and numerals designating the manufacturer, the manufacturer's catalog number, the last two numbers of the year in which it was manufactured, and the conductor diameter. The identifying letters and numerals shall be at least 1/4 inch high. They shall be cast or die stamped on one or both sides of the main member of the assembly. The characters shall be distinct, durable, and conspicuous.

2. TESTS:

(1) Aeolian Vibration Tests: Tests which demonstrate the effectiveness of spacer dampers in limiting the peak-to-peak bending amplitude, caused by aeolian vibration and as defined in the IEEE Task Force on Conductor Vibration (IEEE Paper No. 31 CP 65-156), to 10 mils for ACSR conductors.

Perform tests in suspension spans of the ranges shown on the specification drawing “Spacer Dampers”, with cable tensions not less than 20 percent of the cable nominal ultimate strengths and with vibration dampers installed at the manufacturer's recommended spacing, for ACSR conductors with diameters within plus or minus 0.25 inch of the diameter of the ACSR cable sizes for which spacer dampers are being furnished.

The test for each cable size shall be continued for a minimum of 3 weeks or until a full range of winds between 0 and 20 miles per hour and at right angles to the line have been recorded.

Laboratory tests which are equivalent to the above tests may be performed at the option of the Contractor.

(2) Corona Test: One of each complete spacer damper assembly shall be tested in accordance with the following criteria:

The spacer damper assembly shall be installed on sections of the conductor or bar no larger than the subconductor diameter plus 0.10 inches in diameter. The test shall duplicate the conductor arrangement and spacer damper assembly in dimensions and hardware material used.

The test shall be conducted with the assemblies installed not more than the specified distance from a grounded plane.

The spacer damper assembly shall be subjected to a 50-Hz or 60-Hz voltage to determine that the corona extinction voltage level is not less than the specified voltage. No correction shall be made for climatic conditions. The line-to-ground test voltage may be reduced by 3-percent for each 1,000 feet that the elevation of the test site exceeds mean sea level.

The corona detection device shall be a light amplifier with a gain of 30,000 or more. The test specimen image when viewed shall be no smaller than 20 percent of the light amplifier screen. The device shall be able to detect light generated by corona in the visual spectrum.

In a dark laboratory, the test specimen shall be energized with a high enough voltage to create a detectable, glow corona on the specimen with the light amplifier. This is to prove the detection system is working.

In a dark laboratory, with an applied voltage high enough to create corona and the ground plane in place, the voltage shall be lowered to the specified voltage. The test specimen shall be viewed from at least two directions approximately 180° apart on the plane of the building floor that has the best view of the flat plane or planes of the test specimen. There shall be no visible corona on the test specimen when viewed with the light amplifier.

The Contractor shall submit the “Spacer Damper” drawing to the manufacturer to obtain the spacer damper spacing and number of dampers that has been determined, from tests, to be the most effective in limiting the bending amplitudes as specified above and for all applications listed on the drawing. The Contractor shall determine the necessary vibration protection including the total quantity of and catalog number for all spacer dampers required for this project and the manufacturer's spacing recommendations using asymmetrical spacing. The Contractor shall submit the necessary vibration protection, a copy of the “Spacer Damper” drawing marked to reflect the manufacturer's recommendations for all applications shown on the drawing, and results of the required test reports in accordance with the "Drawings, Data, and Test Reports" Section.

Certified reports of previous tests results which show that spacer dampers meet the requirements of these standards may be substituted for the test results required above.

3. INSTALLATION: Spacing requirements from the manufacturer shall be reviewed by Western prior to installation. Fasten spacer dampers securely to the conductors in accordance with the manufacturer's spacing recommendations and instructions. Components shall be properly aligned and the installation completed with torque wrenches to ensure that bolts are tightened to the values recommended by the manufacturer. Spacer damper installation shall be completed within 72 hours after conductors have been clipped in, unless otherwise approved by the COR. Western will make spot checks of spacer damper installations and, if deficiencies are found, the Contractor shall correct the damper installations to the extent deemed necessary by the COR.

10.6.7 LINE MARKERS:

1. MATERIAL:

   (1) Aerial Marker Balls: Aerial marker balls shall be 20-inch and/or 36-inch-diameter spheres, as specified, suitable for attachment to the specified overhead ground wire. The aerial marker balls shall be manufactured of nonconducting material with long color retention characteristics, and attachment to the overhead ground wire shall be by means of preformed rods. Material and method of attachment shall be equal to SpanGUARD Model 20 and/or 36 as manufactured by P&R Industries, P.O. Box 554, Portland, OR 97207.

   (2) Aerial Patrol Warning Signs: Aerial patrol warning signs shall be in accordance with the "Structure Signs" paragraph.

2. INSTALLATION: Aerial marker ball installation shall be completed within 72 hours after overhead ground wires have been clipped in unless otherwise approved by the COR. The aerial marker balls shall be assembled and installed on the overhead ground wires in accordance with manufacturer's recommendations. Aerial patrol marker balls and aerial patrol warning signs shall be assembled and installed in accordance with drawings 41 9005, 41 9026, 41 9028, and 41 9029.

The aerial marker balls and aerial patrol warning signs shall be located in the specified spans and in accordance with the plan and profile drawings and as directed by the COR.

3. RIVER CROSSING: The 36-inch-diameter aerial marker balls shall be of alternate colors, using solid international orange balls and alternating with yellow balls.

4. TRANSMISSION LINE OVER CROSSING: The color of the transmission line over crossing aerial marker balls shall be solid international orange. For all over crossings where the voltage of the line being crossed is 69 kV or greater, two aerial marker balls, with diameter as specified, shall be required to mark Western's over crossing circuit overhead ground wires. Each aerial marker ball shall be provided on Western's over crossing overhead ground wires at a distance of 25 feet before and after crossing over the lower circuit's outside conductor phases. If the over crossing line has two overhead ground wires, the markers shall be provided on the left overhead ground wire as you face the lower circuit from each side.

5. TRANSMISSION LINE UNDER CROSSING: The marking of Western's transmission line crossings shall consist of the Contractor installing four aerial patrol warning signs, one sign on each of the four transmission line structures located adjacent to the under crossing.

   The signs shall be securely mounted to the right side pole, directly above the crossarm, of the two adjacent structures as viewed looking at the crossing from each direction.

6. TRANSMISSION LINE ANGLE MARKERS: For horizontal line angles of 45° and larger, two aerial marker balls and four aerial patrol warning signs shall be required to mark the line angle. One aerial marker ball shall be provided on the ahead and back span of the angle structure, being located on the inside angle overhead ground wire, at a distance of 25 feet from the angle structure. An aerial patrol warning sign shall be installed on the first structure ahead and back (but a minimum of 500 feet from the angle structure) on each side of the angle structure. An aerial patrol warning sign shall be installed on the next structure ahead and back on each side of the angle structure. The signs shall be installed on the structure's inside angle and shall be mounted to be visible to line patrol aircraft approaching the angle structure.

SECTION 10.7--APPROACH SPANS

10.7.1 GENERAL:

If the take off structure is not available for termination, the material required for the approach span shall be suitably packaged and delivered to Western as directed by the COR.

Western
AREA POWER
ADMINISTRATION

CONSTRUCTION STANDARDS

STANDARD 11

SERVICE BUILDING

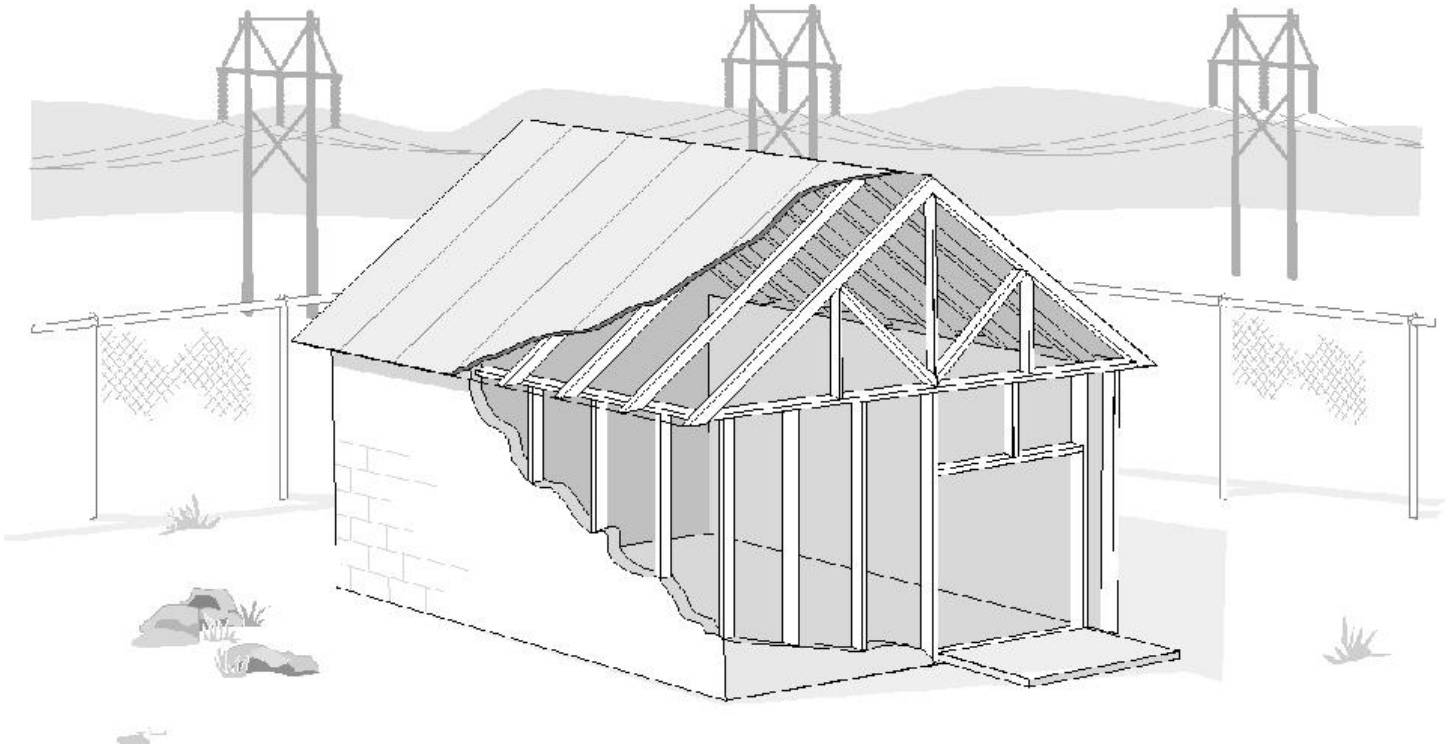

July 2009

SAFETY
A HABIT TO LIVE BY

TABLE OF CONTENTS

Page Number

section 11.1--General 8

11.1.1 Requirements 8

11.1.2 SUBMITTALS 8
1. General 8
2. Contractor Review 8
3. Procedures 8
4. Shop Drawings 9
5. Product Data 9
6. Installation Data 10
7. Samples 10
8. Maintenance Material 10
9. Test Reports 10
10. Project Record Documents 11
11. Maintenance Data 11

11.1.3 OPERATION AND MAINTENANCE DATA 11
1. Requirement 11
2. Submittals 11
3. Manual Format 11
4. Manual Content 12
5. Instruction of Western Personnel 13

SECTION 11.2--SITEWORK 14

11.2.1 EXCAVATION 14
1. General 14

11.2.2 COMPACTION, BACKFILL, AND GRAVELFILLS 14
1. General 14

11.2.3 TERMITE CONTROL 14
1. General 14
2. Quality Assurance 14
3. Submittals 14
4. Operation and Maintenance Data 15
5. Material 15
6. Installation 15

SECTION 11.3--CONCRETE 16

11.3.1 BUILDING CONCRETE 16
1. General 16
2. Concrete Requirements 16

SECTION 11.4--MASONRY 17

11.4.1 MORTAR 17
1. General 17
2. Material 17
3. Mixes 17

4. Installation 17

11.4.2 MASONRY VENEER 17
1. General 17
2. Submittals 17
3. Protection 17
4. Environmental Requirements 17
5. Material 18
6. Preparation 19
7. Installation 19

SECTION 11.5--METALS 21

11.5.1 MISCELLANEOUS METALS 21
1. General 21
2. Submittals 21
3. Material 21
4. Fabrication 22
5. Preparation 23
6. Installation 23
7. Shop Finish Schedule 23

SECTION 11.6--WOOD AND PLASTICS 25

11.6.1 ROUGH CARPENTRY 25
1. General 25
2. Quality Assurance 25
3. Material 25
4. Site Treatment of Wood Material 26
5. Installation 26

11.6.2 WOOD TRUSSES 27
1. General 27
2. Quality Assurance 27
3. Submittals 27
4. Delivery, Storage, and Handling 27
5. Material 27
6. Fabrication 27
7. Installation 27

SECTION 11.7--THERMAL AND MOISTURE PROTECTION 28

11.7.1 BATT AND BLANKET INSULATION 28
1. General 28
2. Material 28
3. Execution 28

11.7.2 PREFORMED ROOF PANELS 29
1. General 29
2. Submittals 29
3. Performance 29
4. Material 29
5. Installation 30

11.7.3 PREFINISHED PLYWOOD SOFFIT 30
1. General 30
2. Submittals 30
3. Material 30
4. Installation 31

11.7.4 CAULKING AND SEALANTS 31
1. General 31
2. Submittals 31
3. Material 31
4. Installation 31
5. Schedule 32

SECTION 11.8--DOORS AND WINDOWS 33

11.8.1 STEEL DOORS AND FRAMES 33
1. General 33
2. Submittals 33
3. Product Handling and Protection 33
4. Material 33
5. Fabrication 33
6. Installation 34
7. Field Painting 34
8. Adjustment 34

11.8.2 FINISH HARDWARE 34
1. General 34
2. Submittals 34
3. Material 34
4. Installation 35

SECTION 11.9--FINISHES 39

11.9.1 GYPSUM WALLBOARD SYSTEMS 39
1. General 39
2. Material Storage 39
3. Environmental Requirements 39
4. Material 39
5. Installation 39
6. Painting 40

11.9.2 RUBBER COVE BASE 40
1. General 40
2. Submittals 40
3. Material 40
4. Installation 41

SECTION 11.10--SPECIALTIES 42

11.10.1 ACCESS FLOORING 42
1. General 42
2. System Description 42
3. Structural System Performance Requirements 42
4. Electrical and Mechanical System Performance Requirements 44
5. Submittals 44
6. Material 44

7. Installation 45

SECTION 11.11--EQUIPMENT 46

11.11.1 EMERGENCY SPRAY 46
1. General 46
2. Submittals 46
3. Material 46

SECTION 11.12--MECHANICAL 47

11.12.1 MECHANICAL, GENERAL 47
1. General 47
2. Submittals 47
3. Drawings 48
4. Codes and Standards 48
5. Motors/Electrical 49
6. Sleeves 49
7. Acceptance Demonstration 50
8. Cleanup 50
9. Maintenance Service Contract 50

11.12.2 SERVICING, ADJUSTING, AND TESTING 50
1. General 50
2. Servicing 50
3. Adjusting 50
4. Adjustment Results 50
5. Testing, Evacuating, and Charging of Refrigerant Lines 50

11.12.3 BALANCING AND ADJUSTING 51
1. General 51
2. Air Systems 51
3. Balancing Report 51
4. Mechanical System Startup and Testing 51
5. System Operational Manual 51

11.12.4 COMPRESSOR-CONDENSER UNITS (SPLIT-SYSTEM DX FAN COIL UNITS) 52
1. General 52
2. Material 52
3. Installation 53

11.12.5 AIR-HANDLING UNITS (DX FAN COIL TYPE) 53
1. General 53
2. Material 53
3. Installation 54

11.12.6 DAMPERS 54
1. General 54
2. Material 54
3. Installation 54

11.12.7 REGISTERS, GRILLES, AND DIFFUSERS 54
1. General 54
2. Material 55
3. Installation 55

11.12.8 AIR FILTERS 55
1. General. 55
2. Material 55
3. Installation 55

11.12.9 DUCTWORK 55
1. General 55
2. Material 55
3. Installation 56

11.12.10a DUCT WRAP (FOR THERMAL INSULATION) 56
1. General 56
2. Material 56
3. Installation 56

11.12.10b DUCT LINER (FOR ABSORBING NOISE) 56
1. General 56
2. Material 56
3. Installation 56

11.12.11 REFRIGERANT ACCESSORIES 56
1. General 56
2. Material 56
3. Installation 57

11.12.12 REFRIGERANT PIPING 57
1. General 57
2. Material 57
3. Installation 57

11.12.13 CONDENSATE DRAINS 57
1. General. 57
2. Material 57
3. Installation 57

11.12.14 VIBRATION ISOLATORS 58
1. General 58
2. Material 58
3. Installation 58

11.12.15 CONTROL EQUIPMENT 58
1. General 58
2. Material 58
3. Installation 58

11.12.16 SEQUENCE OF OPERATION 59
1. General 59
2. Heating and Cooling 59

11.12.17 REFRIGERANT PIPE INSULATION 59
1. General 59
2. Material 59
3. Preparation 60
4. Installation 60

11.12.18 HEAT PUMP UNITS 60
1. General. 60
2. Material 60
3. Installation 61

11.12.19 WALL EXHAUST FAN 62
1. General 62
2. Material 62
3. Installation 62

SECTION 11.13--SERVICE BUILDING ELECTRICAL 63

11.13.1 SERVICE BUILDING ELECTRICAL, GENERAL 63
1. General 63
2. Drawings 63
3. Identification 63
4. Submittals 63
5. Cutting and Patching 63
6. Acceptance Demonstration 64
7. Cleanup 64

11.13.2 LUMINAIRES 64
1. General 64
2. Material 64
3. Installation 64

11.13.3 EMERGENCY LIGHTING UNITS 64
1. General 64
2. Materia 64
3. Painting 65
4. Installation 65

11.13.4 WIRING DEVICES 65
1. General 65
2. Material 65
3. Installation 65

11.13.5 DISCONNECT SWITCHES 66
1. General 66
2. Material 66
3. Installation 66

11.13.6 INTRUSION ALARM 66
1. General 66
2. Material 66
3. Installation 66

11.13.7 EQUIPMENT CONNECTIONS AND MISCELLANEOUS WORK 66
1. General 66
2. Air-Conditioning Equipment Wiring and Connections 67

11.13.8 DIRECT- AND ALTERNATING-CURRENT DISTRIBUTION BOARDS 67

11.13.9 BUILDING GROUNDING 67

11.13.10 EXIT SIGNS 67
1. General 67
2. Material 67
3. Painting 67
4. Installation 67

SECTION 11.1--GENERAL

11.1.1 REQUIREMENTS:

The Bidding Schedule item “Service building” includes providing work required under this “Service Building” Standard.

Work includes construction of a site built service building as detailed on the drawings. Building construction includes a reinforced concrete foundation and slabs; cable entry box with cable sealing assemblies and metal covers; wood framed walls and pre-fabricated wood roof structure; masonry veneer; metal roofing panels; batt insulation; painted gypsum board walls and ceiling; hollow metal doors and frames; accessible floor system; power distribution and lighting; and heating, ventilating, and air-conditioning system.

For use of products containing recovered material, refer to Standard 13 – Environmental Quality Protection.

11.1.2 SUBMITTALS:

1. GENERAL: Provide and submit shop drawings, product data, installation data, samples, maintenance material, test reports, calculations, project record documents, and maintenance data.

2. CONTRACTOR REVIEW:

   (1) General: Review submittals prior to transmittal. Verify that submittals are complete. Determine and verify field measurements, field construction criteria, manufacturer's catalog numbers, and conformance of submittals with these specifications. **When manufacturer’s data is applicable to more than one model number, highlight appropriate information**. **Western will return submittals without review if it is not clear what specific model or type is being proposed for the project.**

   (2) Coordination: Check material and equipment compatibility with equipment and work of other specifications sections, electrical characteristics, and control requirements. Coordinate motor voltages, control characteristics, wiring, switches, and interlocks. Review the effect of any changes on work of other specifications sections.

   (3) Certification: Apply Contractor's stamp, signed or initialed, certifying review, verification of products, field dimensions, and coordination of information with requirements.

3. PROCEDURES:

   (1) Transmittal: Building data shall be submitted to Western Area Power Administration, Civil Engineer. Send a copy of each transmittal letter to the COR. Include Contractor's or supplier's title and drawing identification number and Western's specifications number and title. Provide a transmittal number for each submittal, numbered sequentially, and include on all correspondence.

   (2) Complete Submittals: Incomplete, unchecked, or uncoordinated submittals will be returned to the Contractor without review.

   (3) Modifications by Western: Western has the right to require modifications in shop drawings and data, which will make the installation conform to requirements and intent of these specifications, without additional cost to Western.

(4) Contractor's Responsibility: Approval by Western of submittals does not relieve the Contractor of responsibility for correctness of details or dimensions, nor does it waive any requirements of these specifications.

(5) Return of Submittals: Western will return submittals to the Contractor either approved, not approved, or approved subject to compliance with comments.

(6) Resubmittals: Revise and resubmit submittals which are not approved. Identify changes made since previous submittal and show revision date. Submit submittals approved subject to compliance with comments if directed by Western.

(7) Distribution: Distribute copies of reviewed submittals to concerned persons. Instruct recipients to promptly report any inability to comply with provisions.

4. SHOP DRAWINGS:

(1) Required Submittals: Submit four copies; one will be returned to the Contractor.

Section 11.6.2--Wood Trusses.
Section 11.7.2--Preformed Roof Panels.
Section 11.8.1--Steel Doors and Frames.
Section 11.10.1--Access Flooring.

(2) Content: Title each drawing and include Western's specifications number and title. Identify each element of the drawings by reference to sheet number and detail. Identify field dimensions and show relation to adjacent construction, critical features, and other material or equipment.

5. PRODUCT DATA:

(1) Required Submittals: Submit four copies; one will be returned to the Contractor.

Section 11.2.3--Termite Control.
Section 11.4.2--Masonry Veneer.
Section 11.5.1--Miscellaneous Metals.
Section 11.7.2--Preformed Roof Panels.
Section 11.7.3--Prefinished Plywood Soffit.
Section 11.7.4--Caulking and Sealants.
Section 11.8.2--Finish Hardware.
Section 11.10.1--Access Flooring.
Section 11.11.1--Emergency Spray.
Section 11.12.1--Mechanical, General.
Section 11.13.1--Service Building Electrical, General.

(2) Content: Submit pages which are pertinent. Clearly mark each copy of manufacturer’s standard printed data to identify applicable products, models, options, and other data. Show reference standards, performance characteristics, and capacities; wiring and piping diagrams; controls; component parts; finishes; dimensions; and required clearances. Supplement standard printed data to provide information unique to the work. Delete information not applicable.

6. INSTALLATION DATA:

(1) Required Submittals: Submit two copies of manufacturer's installation instructions to the COR.

Section 11.2.3--Termite Control.
Section 3.1.4.5(1)--Building Concrete.
Section 11.4.2--Masonry Veneer - Water Repellent Coating.
Section 11.12.1--Mechanical, General.

(2) Content: Submit manufacturer's instructions for storage, preparation, assembly, installation, startup, adjusting, balancing, and finishing. Label data with Western's specifications number, title, and paragraph number.

7. SAMPLES:

(1) Required Submittals: Submit two samples as specified in reference sections. Submit samples for all material within enclosed spaces or exterior surfaces at the same time for color coordination.

Section 11.4.2--Masonry Veneer.
Section 11.7.2--Preformed Roof Panels.
Section 11.7.3--Prefinished Plywood Soffit.
Section 11.9.2--Rubber Cove Base.
Section 11.10.1--Access Flooring.

(2) Content: Submit full range of manufacturer's standard finishes indicating colors, textures, and patterns for review and selection by Western. Color charts are acceptable unless otherwise specified. Label each sample with identification of manufacturer, finish information, and these specifications number and title.

8. MAINTENANCE MATERIAL:

(1) Requirement: Provide quantities of products, spare parts, maintenance tools, and maintenance material specified in referenced sections.

Section 11.8.2--Finish Hardware.
Section 11.10.1--Access Flooring.
Section 11.12.1--Mechanical, General.

(2) Storage and Delivery: Maintain spare parts in same space and condition as material to be installed and in original containers with labels intact and legible.

Coordinate delivery with the COR. Deliver spare parts to the COR. Unload spare parts at the site and obtain receipt prior to the date of final acceptance.

9. TEST REPORTS:

(1) Requirement: Conduct tests as required by the following sections. Notify the COR at least 10 days prior to testing. The COR will witness each test. Submit two copies of full report within 20 days of test to the COR. Final payment will not be made until all tests are completed and reports submitted.

Section 11.2.3--Termite Control.
Section 11.12.1--Mechanical, General.

(2) Content for Test:

1) Western's specifications number, title, and paragraph number.
2) Material or equipment name and model and Contractor name.
3) Testing agency and name of inspector.
4) Name of manufacturer's representative present.
5) Date, time, and duration of tests.
6) Type of test, description, and results.
7) Retesting required.

10. PROJECT RECORD DOCUMENTS:

(1) Requirement: Maintain at jobsite for Western one copy of as-built drawings, specifications, modifications, change orders, field change orders, and test records. Do not use as documents for construction. Deliver project record documents to the COR prior to date of final acceptance.

(2) Recording: Record information on a set of drawings and in a copy of these specifications provided by Western. Record information concurrently with construction progress. Do not conceal work until required information is recorded. Mark actual construction, including:

1) Measured horizontal and vertical locations of underground utilities and appurtenances, referenced to permanent surface improvements.

2) Field changes of dimension and detail.

3) Changes made by modifications.

4) Details not on original drawings.

11. MAINTENANCE DATA: Submit in accordance with the “Operation and Maintenance Data” section.

11.1.3 OPERATION AND MAINTENANCE DATA:

1. REQUIREMENT: Provide and submit operation and maintenance (O&M) data for material provided. Instruct Western personnel from O&M data. The following sections contain provisions for data to be submitted to the COR:

Section 11.11.1--Emergency Spray.
Section 11.12.1--Mechanical, General.

2. SUBMITTALS:

(1) Draft Manual: Submit a draft of the manual to the COR. Submit two copies of draft or proposed formats and outlines of contents before starting manual. One copy will be returned with comments.

(2) Completed Manual: Submit to the COR two copies of the completed manual at least 15 days prior to date of final acceptance of the contract.

3. MANUAL FORMAT: Prepare data in form of instructional manual for use by Western personnel. Organize data to correspond with project specifications.

(1) Size: 8 1/2 inches x 11 inches.

(2) Binders: Commercial quality three-ring binders with durable and cleanable covers.

(3) Cover: Identify each binder with typed or printed title “OPERATING AND MAINTENANCE INSTRUCTIONS”. List Western specifications title and building name.

(4) Text: Provide manufacturer's printed data or neatly typewritten pages. Provide typed description of material and major component parts of material or equipment.

(5) Drawings: Bind in with text. Fold larger drawings to size of text.

4. MANUAL CONTENT:

(1) Table of Contents: Specifications title; names, addresses, and telephone numbers of the Contractor with names of responsible parties; and schedule of material and systems indexed to content of binder.

(2) Content: For each material, finish, equipment, or system:

1) Names and Addresses: Provide names, addresses, and telephone numbers of subcontractors and suppliers; area of responsibility; and local source of supply for parts and replacement.

2) Identification: Mark each material safety data sheet to identify specific material component parts and data applicable to installation. Delete inapplicable information.

3) Supplemental Data: Provide typed text as required to supplement material data. Provide logical sequence of instructions for each procedure.

4) Warranty, Bond, and Service Contract: Bind in copy of each.

5) Drawings: Supplement material data with the drawings to illustrate relationships of component parts; control diagrams; flow diagrams; replacement parts; and single-line diagrams. Do not use project record documents as maintenance drawings.

(3) Equipment and Systems: Provide the following:

1) General: Description of unit and component parts, including function, normal operating characteristics, limiting conditions, performance curves, engineering data, tests, complete nomenclature, commercial number of replaceable parts, and as-installed color coded wiring diagrams.

2) Operating Procedures: Startup, break-in, routine operating instructions, sequence of operation description by control manufacturer, and as-installed control diagrams. Also provide regulation, control, stopping, shutdown, emergency instructions, summer and winter operating instructions, and special operating instructions.

3) Maintenance Procedures: Including routine operations, guide to trouble-shooting, disassembly, repair, reassembly, alignment, balancing, adjusting, and checking instructions.

4) Lubrications: Servicing and lubrication schedule and schedule of lubricants.

5) Parts List: Original manufacturer's parts list, illustrations, assembly drawings, and diagrams.

6) Reports: Copy of test and balancing reports.

5. INSTRUCTION OF WESTERN PERSONNEL: Before date of final inspection or acceptance of work, instruct Western-designated operating and maintenance personnel in the operation, adjustment, and maintenance of material, equipment, and systems. Use operating and maintenance manual as basis of instruction. Review manual contents with personnel in detail to explain aspects of operation and maintenance.

SECTION 11.2--SITEWORK

11.2.1 EXCAVATION:

1. GENERAL: Provide excavation for:

   (1) Building foundations and footings, including floor slabs, entrance slabs, equipment slabs, and subfloors.

   (2) Gravelfills.

   (3) Cable entry box.

   (4) Buried conduit, grounding system, and utilities, all in accordance with Standard 2 -"Sitework".

11.2.2 COMPACTION, BACKFILL, AND GRAVELFILLS:

1. GENERAL: Place and compact backfill around building and in utility trenches; provide gravelfill as shown on the building drawings, all in accordance with Standard 2 - "Sitework". Surface of compacted backfill shall slope away from the building a minimum of 4 inches in 10 feet.

11.2.3 TERMITE CONTROL:

1. GENERAL: Provide soil treatment for subterranean insects at interior and exterior foundation perimeter and below slabs-on-grade.

2. QUALITY ASSURANCE:

   (1) General: Conform to EPA's Federal Insecticide, Fungicide, and Rodenticide Act. Conform to State and local requirements for application, licensing, and authority to use termiticides. Follow State and local regulations to meet minimum treatment standards for preventive preconstruction and during construction treatments (horizontal and vertical chemical barriers).

   (2) Applicator: At least 5 years documented experience in soil treatment for termite control. The service technician must be familiar with current termite control practices such as: trenching, rodding, sub-slab injection, coarse fan spraying of soil surfaces, crack and crevice (void) injection, excavated soil treatment, and brush or spray application of infested or susceptible wood. Required to be licensed in the State in which termiticides will be applied.

3. SUBMITTALS: In accordance with the "Submittals" section.

   (1) Product Data: Indicate termiticides to be used, EPA registration number and product lot number from the label(s), composition by percentage, dilution schedule. The proposed termiticide shall maintain 100 percent effectiveness for a period not less than 5 years.

   (2) Installation Data: Application rate (emulsion concentration), and manufacturer's application instructions.

   (3) Termiticide Applicator's Certification/License: Applicator's certification/license number for the State in which termiticides will be applied.

   (4) Test Reports: Accurately record moisture content of soil before treatment, date and rate of application, locations of application, and diary of meter readings and corresponding coverage and other information required by state regulation.

4. OPERATION AND MAINTENANCE DATA: Provide a 5 year warranty for material and installation. Cover against invasion or propagation of subterranean termites, damage to building or building contents caused by termites, and cover repairs to building or building contents so caused.

5. MATERIAL: Water-based emulsion of uniform composition with synthetic dye to permit visual identification of treated soil. Active ingredients may include Chlorpyrifos, Permethrin or Fenvalerate.

6. INSTALLATION:

   (1) Soil Condition: Verify soil surfaces are unfrozen, sufficiently dry to absorb toxicant, and ready to receive treatment.

   (2) Mix Dilution: Apply toxicant in accordance with manufacturer's instructions, and not more than 12 hours prior to installation of vapor barrier under floor slab or finish grading outside foundation perimeter. Apply extra treatment to structure penetrations, pipe, ducts, and other soil penetrations.

   (3) Coordination: Coordinate soil treatment at foundation perimeter with finish grading to avoid disturbance of treated soil.

   (4) Unused Material: Do not store termiticides onsite. Store and dispose of unused solutions or material in accordance with Federal, State, and Local hazardous waste regulations.

SECTION 11.3--CONCRETE

11.3.1 BUILDING CONCRETE:

1. GENERAL: Provide material and work for the following:

   (1) Building foundation, including related building foundation concrete.

   (2) Slabs, including building entrance slabs and equipment slabs.

   (3) Cable entry box.

   (4) Precast reinforced concrete splash blocks, 12 inches wide and 36 inches long, at locations shown on the drawings.

   (5) Asphalt damproofing for exterior of foundation wall.

   (6) Application of a concrete floor hardener and sealer in accordance with section 3.1.4.5(1) Building Concrete.

   (7) Other building concrete work as shown on the drawings.

2. CONCRETE REQUIREMENTS: Concrete material, composition, batching, mixing, forms, placing, tolerances, finishing, protection, curing, repairing, and reinforcement are specified in Standard 3 - “Concrete”. Building concrete shall have a minimum strength of 4,000 psi.

SECTION 11.4--MASONRY

11.4.1 MORTAR:

1. GENERAL: Provide mortar for masonry veneer.

2. MATERIAL:

   (1) Portland Cement: ASTM C 150, Type 1 (normal type) and gray color.

   (2) Hydrated Lime: ASTM C 207, Type S.

   (3) Sand: ASTM C 33.

   (4) Admixtures: Do not use placticizers, water repellent, accelerators, retardants, air-entraining admixtures, antifreeze compounds, or calcium chloride. Do not add mortar color.

   (5) Water: Clean and free from detrimental quantities of silt, organic matter, salts, and impurities.

3. MIXES: ASTM C 270, Type S. Thoroughly mix mortar ingredients in quantities needed for immediate use. If water is lost by evaporation, retemper within 2 hours of mixing. Do not retemper mortar after 2 hours of mixing.

4. INSTALLATION: Place mortar in accordance with Section 11.4.2 “Masonry Veneer”; the section also includes cold weather requirements.

11.4.2 MASONRY VENEER:

1. GENERAL: Provide exterior masonry veneer with anchorage to structural backup, joint reinforcement in moderate and high seismic qualification levels, flashing, and accessories. Provide clear water repellent coating for the concrete masonry veneer. Masonry veneer shall overhang foundation wall by 1/2 inch to provide a 7/8 inch cavity between the wood sheathing and the masonry.

2. SUBMITTALS: In accordance with Section 11.1.2 “Submittals”.

   (1) Product Data: Provide manufacturer’s product data for water repellent coating, masonry ties, horizontal joint reinforcement, mortar barrier and flashing.

   (2) Samples: Submit samples of masonry showing range of color and texture.

   (3) Installation Data: Provide manufacturer’s installation instructions for water repellent coating.

3. PROTECTION: Protect top of masonry walls from moisture infiltration when work is not in progress. Clean loose mortar and foreign material from top of walls when work resumes. Do not lay masonry on surfaces of frost, snow, or ice.

4. ENVIRONMENTAL REQUIREMENTS: Cold weather construction shall be in accordance with the Uniform Building Code. Maintain material and surrounding air temperatures to a minimum of 50°F prior to, during, and 48 hours after completion of masonry work. Use wind breaks when wind is in excess of 15 mph.

5. MATERIAL:

(1) General: Provide concrete masonry units, including joint reinforcement, stretchers, headers, jambs, sash, and special units as required for construction. Masonry veneer of like construction shall have a uniform appearance.

(2) Facing Brick: ASTM C216, Type FBS, grade SW, standard modular size of 4 inches x 2 3/8 inches x 8 inches, color and texture as selected by Western.

(3) Concrete Masonry Units:

1) Hollow Load-Bearing Units: ASTM C 90, Type 1, moisture controlled; standard modular sized; normal weight; split, ground face or slump; natural concrete color unless otherwise required in the project specifications.

(4) Anchor and Ties for Masonry Veneer to Studs: Seismic Design Categories A and B.

1) CWT corrugated wall tie, 16 gauge galvanized steel by Hohmann and Barnard, 30 Rasons Court, P.O. Box 5270, Hauppauge, NY 11788-0270.

2) No. 260 corrugated wall tie, 16-gauge galvanized steel by Heckmann Building Products, Inc., 4015 West Carroll Avenue, Chicago, IL 60624-1899.

(5) Anchors, Ties, and Joint Reinforcement for Masonry Veneer to Studs: Seismic Design Categories C through F.

1) No. 345 BT with Seismiclip Anchor by Hohmann and Barnard, 30 Rasons Court, P.O. Box 5270, Hauppauge, NY 11788-0270.

2) No. 360 L-Type Seismic Anchor by Heckmann Building Products, Inc., 4015 West Carroll Avenue, Chicago, IL 60624-1899.

3) Joint reinforcement - 9-gauge galvanized steel wire.

(6) Mortar: As specified in Section 11.4.1 “Mortar”.

(7) Screws: Self-drilling screws, galvanized, and equal to 1 1/4 inch, Type S, Oval Head by USG.

(8) Flashing: H and B C-Fab flashing, copper sheet bonded to asphalt, saturated glass fabric, 7 ounces per square foot, 24 inches wide by Hohmann and Barnard, 30 Rasons Court, P.O. Box 5270, Hauppauge, NY 11788-0270 Provide adhesive recommended by manufacturer.

(9) Mortar Barrier: Equal to Mortar Net by Hohmann and Barnard, Inc., 30 Rasons Court, P.O. Box 5270, Hauppauge, NY 11788-0270.

(10) Control Joints: As located and shown on the drawings.

(11) Joint Filler and Sealant: Closed cell polyethylene backup material and sealant as specified in Section 11.7.4 “Calking and Sealants”.

(12) Weep Holes: Equal to Quadro-Vent, gray color, by Hohmann and Barnard, Inc., 30 Rasons Court, P.O. Box 5270, Hauppauge, NY 11788-0270, telephone number 800-645-0616; or Mortar Maze weep vent by Advanced Building Products, Inc., P. O. Box 98, Springvale, Maine 04083, telephone number 800-252-2306.

(13) Water Repellent Coating for Concrete Masonry Units: Water repellent coating shall be VOC compliant and not stain the masonry. Equal to Enviroseal Double 7 for block. Results of percent reduction of water leakage greater than 99 percent by ASTM C1389 and vapor transmission rate greater than 90 percent by ASTM E 96.

6. PREPARATION: Establish lines, levels, and coursing. Protect from disturbance.

7. INSTALLATION:

(1) Masonry Veneers: Place masonry veneer to lines and levels indicated.

(2) Uniformity: Maintain courses to uniform width. Make vertical and horizontal joints equal and of uniform thickness.

(3) Bond: Lay masonry veneer in running bond. Form concave mortar joints.

(4) Placing: Lay masonry in full bed of mortar, properly jointed with other work. Buttering corners of joints and deep or excessive furrowing of mortar joints are not permitted.

(5) Intersections and External Corners: Fully bond intersections and external corners.

(6) Adjustments: Do not shift or tap masonry units after mortar has taken initial set. Where adjustment must be made, remove mortar and replace. Remove excess mortar.

(7) Cutting: Perform cutting with tools to provide straight, unchipped edges. Prevent breaking masonry veneer unit corners or edges.

(8) Cavity Space: Maintain minimum 7/8 inch clear space between masonry veneer units and sheathing. Clean out cavity space and weep holes.

(9) Weep Holes: Provide, at top, weep holes at 32 inches maximum on center horizontally above shelf angles at top and at bottom of walls.

(10) Tolerances:

1) Variation From Unit to Adjacent Unit: 1/32 inch maximum.

2) Variation From Plane of Wall: 1/4 inch in 10 feet and 1/2 inch in 20 feet or more.

3) Variation From Plumb: 1/4 inch.

4) Variation From level Coursing: 1/8 inch in 3 feet; 1/4 inch in 10 feet; and 1/2 inch maximum.

5) Variation of Joint Thickness: 1/8 inch in 3 feet.

(11) Anchorages: Attach anchors and ties with screws to stud framing and through sheathing with screws at maximum 24 inches on center vertically and maximum 16 inches on center horizontally. Place at maximum 8 inches on center each way around perimeter of openings and control joints, within 2 inches of openings.

(12) Flashing: Extend flashing through veneer and form a drip on the outside of the foundation. Lap end joints minimum 6 inches and seal watertight. Set flashing on manufacturer's recommended adhesive at the foundation wall and nail to the wood framing. Form end dams at lintels.

(13) Lintels: Install loose steel lintels. Extend minimum 8 inches beyond each edge of opening. Embed firmly in mortar at bearings.

(14) Control Joints: As detailed on the drawings, install backup rod and sealant in mortar-free joint.

(15) Mortar Barrier: Install at base of wall and at lintels in accordance with manufacturer's instructions.

(16) Horizontal Joint Reinforcement for moderate and high seismic qualification levels:

1) Walls: Install at 16 inches on center not continuous through control joints.

2) Openings: Place in first horizontal joints above and below openings. Extend minimum 16 inches each side of opening.

3) Splices: Lap joint reinforcement ends a minimum of 6 inches, but not less than 16 inches each side of opening.

4) Joint Corners: Reinforce joint corners.

5) Embedment: Fully embed reinforcement in mortar.

(17) Water Repellent Coating: Concrete masonry veneer shall be sealed with two coats of water repellent coating. Apply in accordance with manufacturer's recommendations.

(18) Grinding Block: Grind high spots of split face block, as required, at gable ends for fascia to fit tightly against block.

(19) Cutting and Fitting: Cut and fit for pipes, conduits, sleeves, and grounds. Coordinate to provide correct size, shape, and location.

(20) Cleaning: Remove excess mortar and smears. Replace defective work. Match adjacent work. Clean soiled surfaces with solution which will not harm masonry veneer or adjacent material. Consult masonry manufacturer for acceptable cleaners. Use nonmetallic tools in cleaning operations.

SECTION 11.5--METALS

11.5.1 MISCELLANEOUS METALS:

1. GENERAL: Provide material and work for the following:

   (1) Embedded and non-embedded metal material, including but not limited to aluminum or steel covers for the cable entry box, galvanized ledge angles at slabs, cable entry metalwork and sealing assemblies, loose steel lintels, door stop posts, bumper posts, and not including metalwork which is specified in other paragraphs.

   (2) Frames, hangers, and supports required for equipment, except those which are specified in other paragraphs.

   (3) Manufactured material, including soffit vents, cable sealing assemblies, and ceiling access door.

2. SUBMITTALS: In accordance with Section 11.1.2 “Submittals” submit manufacturer's product data for cable sealing assemblies and ceiling access door.

3. MATERIAL:

   (1) Steel Sections, Including Bars, Angles, and Plates: ASTM A 36/A 36M; except that Western inspection of material at the mill will be waived. Galvanize, where required.

   (2) Steel Plates To Be Bent or Cold-Formed: ASTM A 283/A 283M, Grade C (minimum yield point of 30,000 psi).

   (3) Steel Tubing: ASTM A 500 (cold-formed structural quality, welded, or seamless), Grade A (minimum yield strength of 33,000 psi), black finish.

   (4) Steel Pipe: ASTM A 53 type as selected, Grade A (minimum yield strength of 30,000 psi); black finish unless galvanizing is required; standard weight (Schedule 40), unless otherwise indicated.

   (5) Aluminum or Steel Covers: As specified in Standard 4, Section 4.2 Miscellaneous Metalwork.

   (6) Cable Sealing Assemblies: Equal to Roxtec Cable and Pipe Seals (www.roxtec.com) or Multi-Cable Transit by Nelson Firestop Products (www.nelsonfirestop.com), with the following features:

      1) Seals: Rodent resistant and watertight, with positive dust and moisture seal.

      2) Mounting Frame: Multiple units of manufacturer’s standard steel frames with bolting flange. Refer to the drawings for dimensions of openings. Provide rubber gasket to seal flange to concrete.

      3) Sealing Block Assembly: Steel preformed assembly for clamping and spacing cables with size as required.

      4) Sealing Plugs and Reducers: Modules of elastomeric material sized to fit snugly around cables or fill spaces without cables, and removable for future expansion.

      5) Grounding: Provide for grounding assembly.

6) Accessories: Lubricant, sealant, anchors, hardware, bolts, clamps, end packing, compression plates, and accessories required for complete installation.

(7) Ceiling Access Door: Equal to Babcock-Davis B-IW series panel, 22 inches by 22 inches, 1-hour fire rated with smoke gasketing, prime painted from manufacturer.

(8) Soffit Vents:

1) Material: Aluminum with painted finish to match soffit.
2) Width: 2 3/4 inches.
3) Length: Continuous.
4) Accessories: Insect screen.

(9) Welding Material: AWS D1.1 with type required for material being welded.

(10) Arc-Welding Electrodes: In accordance with AWS "Specifications for Iron and Steel Arc-Welding Electrodes" and suitable for base material, positions, and other conditions of intended use.

(11) Fasteners, General: Galvanized for exterior use and where built into exterior walls.

(12) Bolts, Anchor Bolts, and Washers: ASTM A 307, Grade A.

(13) Nuts: ASTM A 563.

(14) Lag Bolts: ASME B18.2.1.

(15) Machine Screws: ASTM A 545.

(16) Anchor Devices: Power driven or powder actuated, drilled expansion bolts; or screws with sleeves; approximately 1 inch long; and equal to fasteners by:

1) ITW Ramset/Red Head, 2100 Golf Road, Rolling Meadows, IL 60008.
2) Fixrammer Corp., 1401 Metals Drive, Charlotte, NC 28213.

4. FABRICATION:

(1) General: For fabrication of metalwork which will be exposed to view, use only material which is smooth and free of surface blemishes including pitting, seam marks, weld splatter, roller marks, rolled trade names, and roughness.

(2) Dimensions: Verify dimensions onsite prior to shop fabrication.

(3) Joints: Fabricate material with joints flush and tightly fitted and secured. Miter corners.

(4) Assembly: Fit and assemble in largest practical sections for delivery to work site.

(5) Grinding: Grind exposed welds flush and smooth with adjacent finished surface. Ease exposed edges to small uniform radius.

(6) Anchorage: Provide components required for anchorage of metalwork. Fabricate anchors and related components of same material and finish as metalwork, except where specifically noted otherwise.

(7) Exposed Mechanical Fastenings: Flush countersunk screws or bolts; unobtrusively located; and consistent with design of structure, except where specifically noted otherwise.

(8) Door Stop Posts: Fabricate from square steel tubing of dimensions as shown on the drawings. Posts shall have cap welded to top.

(9) Bumper Posts: Fabricate from steel pipe of dimensions as shown on the drawings and filled with concrete.

(10) Shop Finish: In accordance with the “Shop Finish Schedule” which follows.

1) Clean surfaces of rust, scale, grease, and other foreign matter prior to finishing or placing in concrete.

2) Prime paint unfinished metalwork with two coats rust-inhibitive primer.

3) Galvanize assembled steel material in accordance with ASTM A 1123.

5. PREPARATION: Clean and strip primed steel or galvanized material to bare metal where welding is required.

6. INSTALLATION:

(1) General: Install material plumb and level, accurately fitted, and free from distortion or defects. Perform cutting, drilling, tapping, and fitting required for installation of metalwork. Fit exposed connections accurately to form tight hairline joints.

(2) Welding: Perform field welding in accordance with AWS D1.1. Grind exposed joints smooth and flush.

(3) Fastening to In-Place Construction: Set anchor devices and fasteners where necessary to secure metalwork to in-place construction. Use threaded fasteners, masonry anchors, toggle bolts, through bolts, lag bolts, wood screws, and other connectors as required.

(4) Manufactured Material: Install in accordance with manufacturer's instructions.

(5) Tolerances for Cable Entry Box Covers:

1) Maximum Space Between Adjoining or Abutting Sections: 1/8 inch.
2) Maximum Variation From Top Surface Plane of Abutting Sections: 1/16 inch.
3) Bearing: Material shall not rock on concrete supports.

(6) Adjustments: Cut or make adjustments as approved by the COR for metalwork which does not fit. Grind concrete surfaces to eliminate high spots or racking of cover.

(7) Painting: In accordance with Standard 12 – “Painting”.

7. SHOP FINISH SCHEDULE: Shop finish material as scheduled or as shown on the drawings:

(1) Door Stop Posts: Prime paint.

(2) Ledge and Shelf Angles Below Grade: Galvanized.

(3) Cable Sealing Assemblies: Galvanized.

(4) Lintels: Prime paint finish. Finish paint at exposed lintels.

(5) Fabricated Access Door and Frame: Prime paint.

(6) Below Ceiling Supports for Equipment: Galvanized finish or painted finish to match equipment.

(7) Manufactured Material: Manufacturer's finish.

(8) Bumper Posts: Prime paint.

SECTION 11.6--WOOD AND PLASTICS

11.6.1 ROUGH CARPENTRY:

1. GENERAL: Provide material and work for the following:

   (1) Wood framing and sheathing for walls and roof structure.

   (2) Fascia, nailers, and miscellaneous wood blocking as detailed on the drawings or as required for backup material.

   (3) Fire blocking.

   (4) Concealed wood blocking for support of equipment.

   (5) Preservative treatment.

   (6) Connectors, fasteners, accessories, and anchors. Refer to structural drawings.

2. QUALITY ASSURANCE:

   (1) Lumber: Identify with grade stamp of an agency certified by NFOPA. Lumber Grading Rules shall be in accordance with WWPA.

   (2) Plywood: Identify with grade stamp of APA.

3. MATERIAL:

   (1) Lumber: In accordance with Product Standard PS 20; graded in accordance with WWPA Grading Rules; maximum moisture content of 19 percent; Douglas Fir, Larch, Hem-Fir, or Redwood species and of the following grades:

      1) Studs for Load-Bearing Walls & Walls Designated as Shear Walls: No, 2 or Better.
      2) Studs for Nonload-Bearing Walls: No. 3 or Stud.
      3) Sills: Redwood No. 1 or Douglas Fir pressure treated with wood preservative.
      4) Light Framing for Plates, Blocking, and Nailers: Utility.
      5) Light Framing (4 Inches x 4 Inches and Smaller) for General Framing: Standard or stud.

   (2) Plywood: PS 1; APA graded; and of the following types:

      1) Roof Deck: 5/8 inch thick; APA Structural II, Grade C-D; waterproof glue; panel span rating 32/16 or better.

      2) Wall Sheathing: 1/2 or 15/32 inch thick; APA exterior, Grade C-D; waterproof glue; panel span rating 24/0 or better.

   (3) Laminated Headers and Beams: Laminated veneer lumber, single-piece length, 1/10-inch to 1/8 inch thick Douglas Fir, and glued in a continuous process with all grains parallel with the length of the member. Size shall be as shown on the drawing. Flexural stress shall be a minimum of 2,800 psi. Equal to MICRO-LAM by Trus Joist Corporation, P.O. Box 60, Boise, ID 83707.

   (4) Moisture Barrier for Wall Sheathing: Equal to 60 Minute Super (premium grade) Jumbo Tex by Fortifiber Corporation, (800) 773-4777.

(5) Nails, Spikes, and Staples: Galvanized for exterior locations and high humidity locations and treated wood; plain finish for other interior locations; size and type to suit application.

(6) Bolts, Nuts, Washers, Lags, and Screws: As specified in Section 11.5 “Miscellaneous Metals”.

(7) Treated Wood: Pressure-treated Douglas Fir used for sills shall be in accordance with the UBC for decaying and termite control of wood. Manufacturer of pressure-treated wood preservative shall provide material for site treatment.

(8) Connectors: Refer to Structural Drawings

4. SITE TREATMENT OF WOOD MATERIAL: Site treat sawn end and machined areas of treated wood with preservative compatible with shop treatment.

5. INSTALLATION:

(1) General: Install framing, blocking, and required nailers. Install members true, plumb, and level. Secure in place.

(2) Spacing: Space framing as shown on the drawings.

(3) Material: Construct members of continuous pieces of longest possible lengths. Provide tight-fitting butt joints.

(4) Attachment: Space sill anchors as called out on the drawings and on each side of and near each joint.

(5) Wall Openings: Double wall-framing members at openings over 100 square inches. Space short members above and below openings in same manner as for walls.

(6) Plywood Decking:

1) Placing: Place panels perpendicular to framing with end joints staggered. Secure panels with edges centered on framing. Maintain panel joints of 1/8 inch at end and edge joints for expansion and contraction.

2) Nailing: Attach with 8d nails spaced at 6 inches on center at edges and 12 inches on center at intermediate supports.

(7) Wall Sheathing: Attach with 8d nails spaced at 6 inches on center at edges and 12 inches on center at intermediate supports. Maintain panel joints of 1/8 inch at end and edge joints.

(8) Moisture Barrier: Install in accordance with manufacturer's recommendations. Overlap and seal at flashing for masonry veneer.

(9) Bolts: Drill holes 1/16 inch larger than bolt diameter. Drill straight and true from one side only. Use washers under nuts and boltheads in contact with wood. Counterbore, where required, but not more than one-third of material thickness.

(10) Lag Screws: Prebore holes the same diameter as root of thread. Enlarge holes to shank diameter for length of shank.

(11) Nails: For conditions not specified or noted on the drawings, provide penetration into receiving piece of minimum one-half nail length. Use 16d nails to connect two pieces of 2x lumber. Replace members split by nailing.

(12) Tolerances: Surface flatness of roof deck and wall sheathing: 1/4 inch in 10 feet maximum.

11.6.2 WOOD TRUSSES:

1. GENERAL: Provide wood trusses including clips for connection to load bearing walls, lateral bracing, and miscellaneous blocking.

2. QUALITY ASSURANCE:

   (1) Design, fabrication, and erection shall conform to TPI "Design Specification for Metal Plate Connected Wood Trusses".

   (2) Design: Trusses shall be designed under the supervision of a registered Professional Engineer and shall meet the requirements of the latest edition of the IBC.

   (3) Qualifications of Fabricator: Fabricator shall meet the requirements for in-plant quality control practices and fabrication procedures as provided by the Truss Plate Institute Inspection Bureau, or the requirements of another approved independent inspection agency.

3. SUBMITTALS: In accordance with the "Submittals" section.

   (1) Shop Drawings: Indicate truss framing plan; species and grades of lumber used; pitch, span, and spacing of trusses; gauge thickness, nominal sizes, and locations of connectors at joints; bearing and anchorage details; framed openings, if required; and permanent bracing and bridging. Drawings shall be stamped by a registered professional engineer.

4. DELIVERY, STORAGE, AND HANDLING: In accordance with TPI.

5. MATERIAL:

   (1) Wood Chords and Webs: Lumber shall conform to TPI requirements, shall be S4S, and shall have a maximum moisture content of 19 percent at time of fabrication. Minimum size of top and bottom truss chord members is to be 2 x 6.

   (2) Plates: Conform to TPI and be galvanized.

   (3) Lateral Support: As recommended by truss manufacturer and design engineer.

   (4) Truss Connectors: Refer to structural drawings.

6. FABRICATION: In accordance with TPI. Ensure members are accurately cut to length, angle, and true to line for tight joints.

7. INSTALLATION: Erect and brace trusses in accordance with the manufacturer's recommendations. Temporary and permanent bracings shall provide sufficient support at right angles to the plane of the truss to hold each truss in correct location and alignment. Install permanent bracing and bridging prior to application of loads.

SECTION 11.7--THERMAL AND MOISTURE PROTECTION

11.7.1 BATT AND BLANKET INSULATION:

1. GENERAL: Provide insulation above the ceiling, in exterior walls, and at locations shown on the drawings. The minimum resistance value (R) is noted on the drawings. Insulation shall have a minimum recycled content of 25 percent.

2. MATERIAL:

   (1) FSK Faced Insulation: Equal to Formaldehyde-free FSK (foil-scrim-kraft) Faced Batts by Johns Manville Corporation, and having the following minimum characteristics:

      1) Compliance with ASTM C 665, Type III, Class A, Category 1.

      2) Surface Burning Characteristics, ASTM E84: Flame-spread 25 or less, smoke-development 50 or less.

      3) Water Vapor Permeance, ASTM E96: 0.05 perms or less.

      4) Fungi Resistance, ASTM C1338: pass.

   (2) Unfaced Batt Insulation: Equal to Formaldehyde-free Unfaced Batts by Johns Manville Corporation, and having the following minimum characteristics:

      1) Compliance with ASTM C 665, Type 1.

      2) Surface Burning Characteristics, ASTM E84: Flame-spread 25 or less, smoke-development 50 or less.

      3) Fungi Resistance, ASTM C1338: pass.

   (3) Safing Insulation: Equal to Thermafiber by USG Corporation.

      1) Thickness: 4 inches.
      2) Compliance with ASTM E84, flame/fuel/smoke rating of 15/0/0.

   (4) Staples: As recommended by insulation manufacturer.

3. EXECUTION:

   (1) Preparation: Verify adjacent material is dry and ready to receive insulation. Verify mechanical and electrical services within walls have been installed and tested.

   (2) General: Install insulation in accordance with manufacturer's instructions. Trim insulation neatly to fit spaces. Fit insulation tight in spaces and tight to exterior side of mechanical and electrical services within the plane of insulation. Leave no gaps or voids.

   (3) Faced Batt Insulation: Install insulation with vapor retarder facing warm side of building spaces. Friction staple insulation between wood studs. Tape and seal tears and cuts in vapor retarder. Maintain continuity of vapor retarder membrane.

   (4) Ceiling Insulation: Install after installations above ceiling are complete.

11.7.2 PREFORMED ROOF PANELS:

1. GENERAL: Provide metal roofing with vented ridge cap, prefinished metal fascia to match roofing, flashing, and concealed anchors. Provide roofing felt underlayment. Roofing shall be grounded at four corners. Provide gutters and downspouts as shown on the drawings.

2. SUBMITTALS: In accordance with Section 11.1.2 “Submittals”.

   (1) Product Data: Manufacturer’s material specifications and finishes.

   (2) Shop Drawings: Indicate details at ridge, including grounding, concealed clips and fasteners, flashing conditions, gutters and downspouts, metal fascia, and other details necessary for installation.

   (3) Samples: Submit a sample kit showing the standard range of factory-applied finishes for color selection by Western.

3. PERFORMANCE:

   (1) Leakage: Roofing installation shall be free from water leakage under all weather conditions for roof slope of 4:12.

   (2) Roof Finish: No chalk in excess of seven units as measured in accordance with ASTM D 659. No fade or color change in excess of 6 NBS units when measured in accordance with ASTM D 2244.

   (3) Thermal Movement: Provide roof and accessories to accommodate thermal expansion and contraction for plus or minus 100°F.

4. MATERIAL:

   (1) Metal Roofing: Equal to Span-Lok hp by AEP-Span (www.aep-span.com) and shall have the following features:

      1) Base Material: 24 gauge galvanized sheet steel.

      2) Dimensions: Panel width of 16 inches to 24 inches on center; height approximately 2 inches.

      3) Finish: Factory-applied fluoropolymer paint.

      4) Panel Length: Continuous from ridge to eave.

   (2) Anchor Clips, Cleats, and Starter Strips: Two piece, self centering, allowance for expansion and contraction, concealed, minimum 24 gauge galvanized or aluminized sheet steel; provided by roofing manufacturer.

   (3) Vented Ridge Cap, Fascia, Trim Material, and Flashings: Factory formed from same material, gauge, and finish as roofing material. Provide insect screen for vented ridge cap. Allow for roof panel expansion and contraction.

   (4) Snow Guards: Equal to G T Products, cast brass, two pipe snow guard specifically designed for attachment to standing seams of metal roof systems (http://geotechproduct.com). Provide snow guards for buildings constructed in regions with winter icing and snow.

(5) Fasteners: Concealed screw attachment suitable for fastening sheet metal to plywood, as recommended by roofing manufacturer, and corrosion resistant.

(6) Roofing Underlayment: Equal to Grace Ultra, self-adhered roofing underlayment for high temperature applications, 30 mil thickness. Prime roof sheathing with Perm-A-Barrier WB Primer at a rate of 250-350 sq. ft. per gallon.

(7) Sealant: As recommended by roof panel manufacturer or in accordance with Section 11.7.4 “Caulking and Sealants”.

5. INSTALLATION:

(1) General: Execute work in accordance with roof panel manufacturer's instructions.

(2) Underlayment: Apply underlayment to meet requirements of roofing manufacturer for weather tight installation.

(3) Joints: Lap, lock, cleat, seam, and seal all joints for weather tight installation.

(4) Clips and Cleats: Shall be concealed, with spacing as recommended by roofing manufacturer for UL 90 rating.

(5) Detail Standards: For gutters and downspouts fabrication, conform to the SMACNA “Architectural Sheet Metal Manual” recommendations.

(6) Grounding: In accordance with approved shop drawings, provide grounding at each end of the building. Run a grounding wire under the ridge cap the full length of the building. Connect each roofing panel to the grounding wire.

(7) Repairs: Repair or replace material which is loose, improperly fitted, or damaged.

(8) Painting: Paint cut edges of roofing, flashing, and accessories with matching paint provided by roofing manufacturer. Touch up minor scratches.

11.7.3 PREFINISHED PLYWOOD SOFFIT:

1. GENERAL: Provide prefinished plywood soffit complete with standard trim components and accessories.

2. SUBMITTALS: In accordance with Section 11.1.2 “Submittals”.

(1) Product Data: Submit manufacturer’s specifications for material and accessories.

(2) Samples: Submit two samples representative of the prefinished plywood showing colors and finishes for selection by Western.

3. MATERIAL:

(1) Prefinished Plywood: Equal to panel 15 by Citadel Architectural Products (www.citadelap.com) and with the following features:

1) Core: Structural C-plugged exterior grade plywood, 5/16 inch thick, 4 feet wide, and 10 feet long.

2) Face Sheet: 0.010 inch textured aluminum, with pebble texture and prefinished baked-on acrylic coating, bonded to core with waterproof adhesive.

3) Back Sheet: 0.004 inch fiberglass-reinforced aluminum foil backer bonded to core with waterproof adhesive.

4) Protective Sheets: Protect finished surfaces from damage during shipping.

(2) Trim: Provide end panel closures, corner trims, drips, and other moldings as required for a complete and weathertight installation. Trim shall be extruded or roll-formed aluminum with baked-on acrylic coating and color to match panels. Trim shall be by the panel manufacturer.

(3) Nails: Aluminum, colored to match panels, and of size and type recommended by manufacturer.

(4) Screws: Color to match panels and as recommended by manufacturer.

4. INSTALLATION: Install panels, trim, and accessories as shown on the drawings, and in accordance with manufacturer's instructions. Provide adequate separation of aluminum panel edges and backs from dissimilar metals, as recommended by manufacturer, to prevent electrolysis. Panels damaged during installation shall be repaired or replaced as directed by the COR.

11.7.4 CAULKING AND SEALANTS:

1. GENERAL: Provide acrylic caulking for interior of building and silicone sealant for exterior.

2. SUBMITTALS: In accordance with Section 11.1.2 “Submittals”.

(1) Product Data: Submit manufacturer's specifications for caulking and sealants.

3. MATERIAL:

(1) Acrylic Caulking: ASTM C 834; one component; acrylic sealant; color to match adjacent construction.

(2) Silicone Sealant: ASTM C 920, Type S, Grade NS, Class 25, one component; low-modules silicone sealant, color to match adjacent areas when visible.

(3) Firestop Sealant: Silicone based elastic firestop sealant, joint movement capability of plus or minus 25 percent, minimum 2 hour fire resistance approval by UL, equal to Hilti CP 601 Elastomeric Firestop Sealant.

(4) Backup Material: Closed cell polyethylene foam round rods having highly flexible and compressive characteristics; compatible with joint compound.

4. INSTALLATION: Surface preparation and installation of backup material shall be in accordance with manufacturer's instructions.

(1) Temperatures: Do not install sealant when ambient temperature or temperature of surfaces against which it will be placed is below 40°F unless permitted by manufacturer’s installation instructions.

(2) Repairing: Joint compounds that are not homogeneous, do not bond to surfaces of joints, or are otherwise defective shall be removed from joints, and joints recleaned and recaulked at the Contractor's expense.

5. SCHEDULE: Intended as a guide for caulk and sealant locations; however, each location is subject to approval.

   (1) Acrylic Caulk: Use for interior work only, gypsum board caulking, interior hollow metal frames, and joints between dissimilar material where little or no movement is expected.

   (2) Sealant: Use for joints in building exterior such as masonry control joints, and around metal frames and metal roofing.

   (3) Firestop Sealant: For use in sealing penetrations through battery room walls or ceiling.

SECTION 11.8--DOORS AND WINDOWS

11.8.1 STEEL DOORS AND FRAMES:

1. GENERAL: Provide steel swinging doors, doorframes, and other accessory material where shown on the drawings, or required, for a complete installation. Steel door frames shall be grounded.

2. SUBMITTALS: In accordance with Section 11.1.2 “Submittals”.

   (1) Shop Drawings: Submit details of steel swinging doors and doorframes. Show sizes and locations of framing members and reinforcement; gauges of steel; type and thickness of insulation; anchors; location of door hardware; location, size, and thickness of hardware reinforcements; and other details covering fabrication.

3. PRODUCT HANDLING AND PROTECTION: Follow manufacturer's special storage and handling requirements.

4. MATERIAL:

   (1) General: Doors and frames shall be of sizes shown on the drawings. Doors and frames shall be products of one manufacturer. Panel reinforcement for doors shall be steel reinforcement only.

   (2) Exterior Steel Doors: Level 3 (extra heavy duty), Model 1 (full flush construction), and 1 3/4 inch thick, 16 gauge, in accordance with ANSI/SDI-100. Class (door type) as shown on the drawings.

   Fill spaces within exterior doors with glass fiber insulation having a minimum density of 1 1/2 pounds per cubic foot or polystyrene having a minimum density of 1 pound per cubic foot.

   (3) Interior Steel Doors: Level 2 (heavy duty), model 1 (full flush construction), 1 3/4 inches thick, 18 gauge, in accordance with ANSI/SDI-100. Door type as shown on drawings.

   (4) Steel Doorframes: Doorframes shall be welded and of types and sizes shown on the drawings; in accordance with requirements of ANSI/SDI-100, except for gauge.

      1) Exterior Doorframes: Exterior doorframes shall be 14-gauge sheet steel and insulated.
      2) Interior Doorframes: Interior doorframes shall be 16-gauge sheet steel.

   (5) Caulking and Backup Material: In accordance with Section 11.7.4 “Caulking and Sealants”.

   (6) Frame Anchors: SDI standard, compatible with adjacent construction, and welded to doorframe.

   (7) Stiffeners: Shall be not less than 12 gauge steel.

5. FABRICATION:

   (1) General: Doors and frames shall be reinforced, drilled, and tapped in shop to receive projecting hardware. Perform drilling and tapping for surface hardware in the field. Use templates furnished by hardware manufacturer to ensure correct fitting and installation of hardware.

   (2) Doors: Top and bottom of doors shall receive a flush end closure treatment. Surface sheets shall be supported by continuous, hat-shaped members not less than 20 gauge, spaced not

more than 6 inches on center, and internally spot welded to both surface sheets not more than 4 inches on center. Undercut each door leaf as required for proper clearance and installation of weatherstripping and threshold.

(3) Frames: Frames for installation in wall openings over 4 feet wide shall have a 12 gauge channel stiffener factory welded into the head. Frames for installation in exterior and interior walls shall be of welded construction.

(4) Anchors: Provide four welded anchors per jamb for frames up to 7 feet high, and one additional anchor per foot of height above 7 feet. In addition, provide sill anchors for all frames.

(5) Shop Finish: Exterior doors and frames shall be galvanized, followed by a phosphate treatment, and given the manufacturer's standard shop coat of nonbituminous priming paint. All exterior frames shall receive one coat of bituminous water-resistant paint on the inside, unexposed surface.

6. INSTALLATION:

(1) Doors and Frames: Install doors and frames in true alignment with head level and jambs plumb. Install welded-type doorframes at the time walls are constructed; brace and anchor in place.

(2) Hardware: In accordance with Section 11.8.2 “Finish Hardware”.

7. FIELD PAINTING: After doors are installed, but before projecting hardware is installed, doors and doorframes shall be painted in accordance with Standard 12 – “Painting”.

8. ADJUSTMENT: Before acceptance of work, test operation of doors and correct defects in operation.

11.8.2 FINISH HARDWARE:

1. GENERAL: Provide hardware for steel doors, complete with fasteners, anchors, and other accessories for full operation of hardware.

2. SUBMITTALS: In accordance with Section 11.1.2 “Submittals”.

(1) Product Data:

1) Catalog Cuts: Include manufacturer, manufacturer's catalog number, construction of hardware, series, type, style, finish, trim, keying of locks, number of tumbler pins in lock cylinders, and other pertinent details. Mark catalog cuts to identify data for each item.

2) Hardware Schedule: Include door numbers and hardware group numbers, hardware manufacturer's name, and hardware catalog item numbers including trim, finish, and size; and other information for complete hardware schedule.

(2) Maintenance Material: With delivery of permanent keys, deliver to the COR one complete set of adjustment tools for all of the hardware types installed.

3. MATERIAL:

(1) Door Hardware: Provide each door in each hardware group of Table 11-2--Hardware Schedule, with type and number of hardware items specified by Table 11-1--Door Hardware Types.

Items for each hardware type shall be products of same manufacturer. Hardware shall be equal to manufacturer's catalog items referenced in Table 11-1.

(2) Keying:

1) Door locks shall be keyed the same.

2) Existing Keying System: A master keying system has been established with Best Access Systems. The keying system is either a six-pin or seven-pin system; consult with the COR. The lock sets for doors shall be supplied with a permanent cylinder with temporary construction core for use during construction. The cylinder furnished shall be capable of accepting a Best Access Systems permanent core. When construction is complete, the Contractor shall turn over to Western the construction master and control key. Western will furnish and install the permanent cores.

(3) Fasteners: Provide hardware with screws, bolts, and other fasteners of suitable size and type to anchor hardware in position for long life under hard use. Provide expansion shields, toggle bolts, hex bolts, and other anchors suitable for type of material to which hardware is applied. Fasteners shall be compatible with or match hardware material and finish.

4. INSTALLATION:

(1) General: Install hardware in accordance with manufacturer's recommendations, using proper templates.

(2) Painting: Do not install projecting hardware until painting of doors and frames is complete.

(3) Thresholds: Fit tight to doorframes, set in full beds of mastic, and attach to concrete with machine screws in expansion anchors.

(4) Closers: Provide parallel arms at outswinging exterior doors to prevent exterior exposure. Size exterior door closers one size oversized.

(5) Astragal: Attach astragal to inactive leaf on outswinging double doors.

(6) Adjustment: Test operation of each door, verify lock location, adjust hardware, and correct defects in operation.

TABLE 11-1--DOOR HARDWARE TYPES

Type	Hardware Schedule Designation	Description	Finish	Manufacturer's Catalog Items	Number Required Per Door
Hinges	H1	4 1/2 inch x 4 1/2 inch, brass, heavy weight, full mortise, template, five knuckles, four ball bearings, non-removable pin, and flat button tips.	US10	Hager BB1199 NPR. Stanley FBB199 NRP or equal.	3 per door up to 7 ft. height, 1 add'l hinge per ft. over 7 ft. height.

Type	Hardware Schedule Designation	Description	Finish	Manufacturer's Catalog Items	Number Required Per Door
Lock set	L1	Mortise lock set with knobs, roses, and cylinder rings; antifriction latch bolt, stops or toggle in face, deadbolt throw of 1 inch; screwless knob spindle; and cylinders with interchangeable tumbler core.	612	Best 45H7TA3H or equal.	1 for active leaf.
		Latch bolt by knob from either side except when knob outside is locked by stop or toggle in face, and by key outside when outer knob is locked. Deadbolt by key outside and turn knob inside. Rotating inside knob simultaneously retracts both latch bolt and deadbolt.			
Latchset	L2	Heavy duty cylindrical latch set, levers on both sides to remain active at all times, no locking required.	612	Best 93KON15D or equal	Latchset
Surface bolts	SB1	Lever extension flush bolts with flat front, standard strike at top, and dustproof bottom strike for metal threshold.	612	Ives SB453-12 inches with dustproof strike, or equal.	1 set for top and bottom of inactive leaf.
Door closer	C1	Modern-type surface closer with cover for parallel arm installation on stop side of door; rack-and-pinion construction, with closing force range adjustable 15 percent or more over minimum spring load; adjustable back check; adjustable closing speed and latching speed; and hold-open parallel arm with holding range of 90 to 180°.	Standard brown lacquer	Norton P8501H or equal.	1 for active leaf.
Kick down holder	DH1	Door mounted holder, 5 inch length with rubber tip.	612	Ives FS452 – 5 inches or equal.	1 for inactive leaf.
Doorstop	ST1	For installation on steel tube filled with concrete, projection of approximately 3 5/8 inches, and base diameter of 2 1/4 inches.	612	Ives WS443 or equal.	1 for inactive leaf.
Doorstop	ST2	Wall mounted wall bumper.	612	Ives WS402CVX or equal.	
Door Bottom Sweep	DBS	One piece, aluminum rain drip with vinyl sweep, fastened to bottom of door.	Bronze	Pemko 345DV or equal.	1 for each leaf.

Type	Hardware Schedule Designation	Description	Finish	Manufacturer's Catalog Items	Number Required Per Door
Threshold	T1	One-piece, extruded aluminum threshold; silicone seal;1/2 inch height; 5-inch minimum width; length equal to full width of door; notched ends at doorstops; countersunk screw holes spaced approximately 12 inches center-to-center with end holes not more than 3 inches from ends of thresholds; and flat-head machine screws that color match the thresholds.	Mill	Pemko 2001AS or equal.	1 continuous at sill.
Weather-stripping	W1	Self-adhesive silicone rubber weather-stripping.		Pemko S88D or equal.	Continuous at head and jambs.
Weather-stripping	W2	Rigid jamb weather stripping, installed on the doorframe stop, with silicone bulb type seal.		Pemko 2891DS	Continuous at head, jambs and meeting styles.
Astragal	AST 1	Minimum 1/8 inch x 2 inch primed steel astragal with self-adhesive silicone rubber weather-stripping.		Pemko 357SP with S88D or equal.	1 at astragals.
Exit Device	ED1	Rim exit device with blank escutcheon trim and lever on the exterior. Lever to remain active all the time. **No exterior trim at battery room exterior door.**		Corbin Russwin ED5200A x N910 or equal.	

TABLE 11-2--HARDWARE SCHEDULE

Hardware Group Number	Door Number	Required Hardware (See Table 6-1)	Remarks
1	1	H1 L1 SB1 C1 DH1 ST1 DBS T1 W1 and W2 AST1	Pair of doors, exterior from control room.
2	2	H1 L1 C1 DBS T1 W1 and W2	Exterior from control room.

Hardware Group Number	Door Number	Required Hardware (See Table 6-1)	Remarks
3	3	H1 ED1 C1 T1 DBS W1 and W2	Exterior from battery room.
4	4	H1 ED1 C1 W1	Control room from battery room.
5	5	H1 L2 ST2	Storage room from control room.

SECTION 11.9--FINISHES

11.9.1 GYPSUM WALLBOARD SYSTEMS:

1. GENERAL: Provide material and work for the following:

   (1) Gypsum wallboard.
   (2) Accessories.

2. MATERIAL STORAGE: Store gypsum wallboard inside under cover, flat, and off the floor. Deliver material to site with manufacturer's labels intact.

3. ENVIRONMENTAL REQUIREMENTS: Maintain temperature at 55 to 70°F during installation. Protect adjacent surfaces from damage and stains.

4. MATERIAL:

   (1) Fire-Retardant Gypsum Wallboard ASTM C 36: Type X (fire-retardant core), plain face, plain back, tapered edge, 5/8-inch thickness.

   (2) Accessories:

      1) Gypsum Wallboard Fasteners: Drywall screw fasteners shall be Phillip-head screw fasteners with a self-drilling point and self-tapping bugle head, for use with a power-driven tool. Size of fasteners shall be as recommended by manufacturer.

      2) Metal Corners and Trim: Galvanized steel or other noncorrosive metal and of standard commercial quality.

      3) Control Joints: Equal to United States Gypsum Control Joint No. 093.

      4) Tape and Joint Cement: Material for treatment of joints in gypsum wallboard, including tape and compound, shall conform to requirements of ASTM C 475.

5. INSTALLATION:

   (1) Gypsum Wallboard:

      1) General: Do not apply gypsum wallboard to walls and ceiling until pipes, electrical conduit, insulation, and other features to be concealed are placed.

         Where practicable, apply gypsum wallboard with long dimension perpendicular to studs. Butt board together tightly at joints and stagger end joints. Ends of board shall bear on a support with at least 5/8 inch bearing.

         Install metal corners at outside corners and other locations where required to conceal exposed edges. Install metal trim at openings and other locations as required to conceal exposed edges of board. Install metal corners and trim in accordance with manufacturer's instructions.

         Install with screw fasteners of the type recommended by manufacturer. Screwheads shall be driven to provide a slight depression below the board surface. Do not drive screw fasteners closer than 3/8 inch from board edges.

2) Wall Attachment to Wood Studs: Fasten gypsum wallboard to each support with screws spaced not more than 12 inches on center in the field of board and at 12 inches on center staggered along abutting ends.

3) Ceiling Attachment: Fasten gypsum wallboard to each support with screw fasteners spaced not more than 12 inches on center in the field of board and 8 inches on center staggered along abutting ends.

(2) Joints: Following attachment of gypsum wallboard, tape joints in board. Install tape reinforcement at all inside corners.

Fill exposed joints evenly and fully with joint compound using tools designed for the purpose. Compound shall extend approximately 1 1/2 inches on each side of joint. Tape shall then be applied directly over compound. Press tape into place with a putty knife and smooth compound. After compound has dried thoroughly, apply another thin coat of compound over tape and feather out 4 inches on each side of joint. When second coat of compound has dried, apply a third coat of compound over second coat and feather out not less than 6 inches on each side of joint.

Between applications of compound at joints, rough spots or areas shall be sanded smooth. Machine application of tape will be permitted. Twenty-four hours after third coat has been applied, entire area covered with compound shall be sanded smooth and level with wallboard.

Dimples at screwheads and other depressions in board surface shall receive three coats of joint compound, applied as each coat is applied to joints.

(3) Control Joints: Isolate gypsum wallboard surfaces with a control joint or other means recommended by manufacturer for the following conditions:

1) Where construction changes within the plane of wall or ceiling.
2) Where gypsum wallboard run exceeds 30 feet.

(4) Repairing: Fill damaged surface areas as required with an approved filler material. Repair defective fastenings in accordance with manufacturer's instructions.

6. PAINTING: Paint exposed surfaces of gypsum wallboard and metal trim in accordance with Standard 12 – “Painting”.

11.9.2 RUBBER COVE BASE:

1. GENERAL: Provide rubber cove base.

2. SUBMITTALS: In accordance with Section 11.1.2 “Submittals”.

(1) Samples: Submit one color sample set for color selection of base.

3. MATERIAL:

(1) Rubber Cove Base: Vulcanized thermoset rubber cove base, 4 inches high, and equal to BurkeBase Rubber Wall Base Type TS, 1/8 inch cove base by Burke (www.burkeflooring.com).

Internal and external molded corners shall be furnished and installed for internal and external corners, respectively, where rubber cove base is required.

(2) Cement: Type recommended by rubber cove base manufacturer.

4. INSTALLATION: In accordance with manufacturer's instructions. Clean rubber base after installation.

SECTION 11.10--SPECIALTIES

11.10.1 ACCESS FLOORING:

1. GENERAL: Provide 18-inch-high access flooring system with high-pressure laminate finish. The system shall be grounded at four corners of the control room.

2. SYSTEM DESCRIPTION:

   (1) System: Elevated pedestal with stringers and rigid floor panels, complete with accessories, and high-pressure laminate finish.

   (2) Floor Panel Size: 24 inches by 24 inches finished with high-pressure laminate.

   (3) Elevated Floor: Nominal height of 18 inches above subfloor.

   (4) Tolerances: Floor panel flatness, plus or minus 0.02 inches in any direction; floor panel length, plus or minus 0.02 inch; floor panel squareness, plus or minus 0.03 inch in diagonal direction.

3. STRUCTURAL SYSTEM PERFORMANCE REQUIREMENTS:

   The access floor system shall be designed for gravity and lateral loads in accordance with the latest edition of the International Building Code, specific to the location of the installation. Design shall be based upon specified Occupancy and Seismic Design Categories. Design shall include wood or concrete core floor panels, supporting stringers, pedestals, braces, boltable steel base plates, connections between system elements, and mechanical fasteners to the concrete sub-floor.

   Compliance with specified performance requirements of the entire access floor system shall be verified through design calculations or testing. A complete load path analysis shall be included in the calculations verifying that gravity and lateral loads can be successfully transmitted through the access floor system into the concrete sub-structure. Resolution of the specified lateral loads can be achieved by using a properly designed cross-braced or cantilevered floor system provided calculations reflect the method selected. Design calculations and drawings shall be prepared, sealed, and signed by a civil or structural engineer registered in the state where the project is to be installed.

   Minimum performance and design load requirements for the entire access floor system, unless the International Building Code includes more stringent requirements, are as follows:

   (1) Floor System Uniform Live Load: Loading requirement shall be in accordance with the latest edition of the International Building Code (IBC), Chapter 16 - Structural Design, table titled “Minimum Uniformly Distributed Live Loads and Minimum Concentrated Live Loads, Occupancy or Use – Access Floor Systems – Computer Use”.

   (2) Floor System Concentrated Live Load: Loading requirement shall be based upon the same IBC table indicated in paragraph above.

   (3) Installations considered being within Seismic Design Category C: Regardless of engineering calculations, provide mechanical fasteners (adhesive is not acceptable) from pedestal base plates to concrete floor slab; and provide direct connection from bases of floor-mounted equipment to the concrete floor slab below. Refer to Figure 1 below.

   (4) Installations considered being within Seismic Design Categories D through F: Regardless of engineering calculations, provide mechanical fasteners (adhesive is not acceptable) from

pedestal base plates to concrete floor slab; provide direct connection from bases of floor-mounted equipment to the concrete floor slab below; and provide two-dimensional cross bracing (on four sides) directly beneath equipment. Refer to Figures 1, 2, and 3 below.

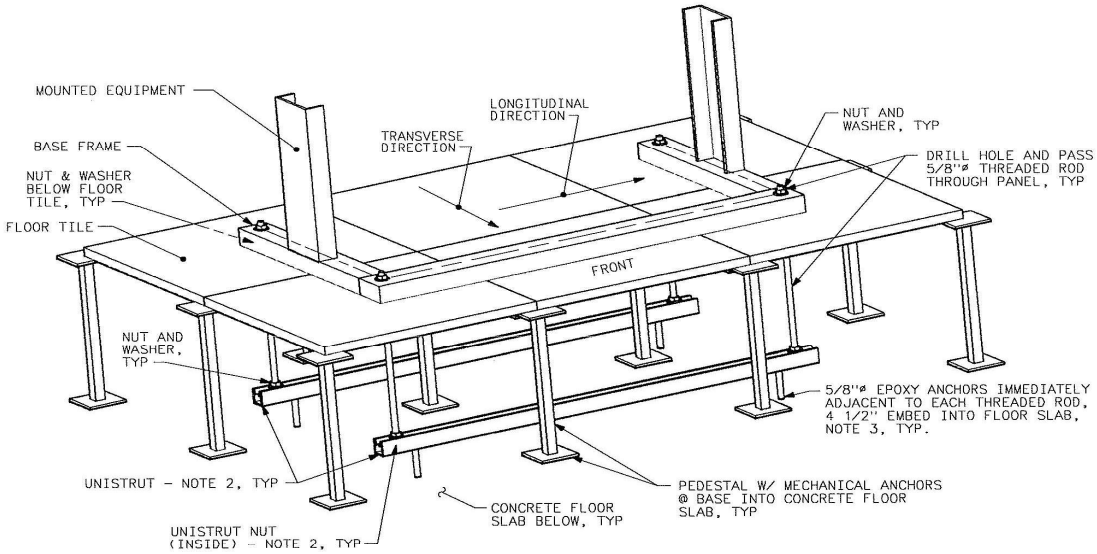

FIGURE 1
GENERAL REQUIREMENTS FOR SEISMIC DESIGN CATEGORIES (SDC) C THROUGH F

NOTES:
1. STRINGERS BETWEEN TOPS OF FLOOR PEDESTALS NOT SHOWN FOR CLARITY.
2. UNISTRUT SYSTEM:
   12 GUAGE, 1 5/8" CHANNEL SYSTEM (OR EQUAL), W/ MATCHED HARDWARE.
3. EPOXY ANCHORS:
   HILTI HIT-RE 500-SD EPOXY ANCHORING SYSTEM OR EQUAL; QUALIFIED FOR SEISMIC DESIGN CATEGORIES A-F.

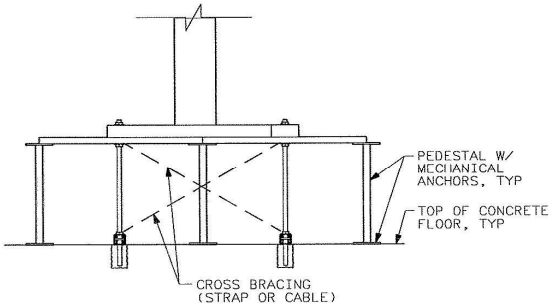

FIGURE 2
SUPPLEMENTAL TRANSVERSE CROSS BRACING IN SDC D THROUGH F

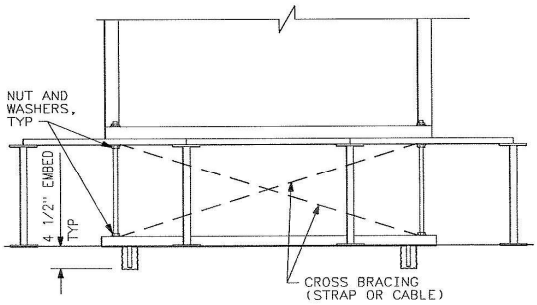

FIGURE 3
SUPPLEMENTAL LONGITUDINAL CROSS BRACING IN SDC D THROUGH F

NOTE: STRINGERS BETWEEN TOPS OF FLOOR PEDESTALS NOT SHOWN FOR CLARITY

4. ELECTRICAL AND MECHANICAL SYSTEM PERFORMANCE REQUIREMENTS:

   (1) Electrical Resistance: Electrical resistance from metal parts of panels to pedestals, between pedestals and bolted stringers, and between the metal understructure and building ground shall be less than 1 ohm.

   (2) Fire Rating: Class A flame spread rating in accordance with ASTM E 84.

5. SUBMITTALS:

   (1) Shop Drawings: Indicate flooring layout, interruptions of grid, grounding details, panels drilled or cut out, and miscellaneous accessories.

   (2) Calculation Package: Engineering calculations verifying performance of the access floor system as specified.

   (3) Product Data: Submit manufacturer's data describing the quality of material, electrical resistance, accessories, and finishes.

   (4) Samples: If an alternate to the specified high-pressure laminate is proposed, submit two samples or color charts showing colors available for selection by Western.

   (5) Maintenance Material: Provide six floor panels, and one lifting device to the COR. Floor panels shall include finish material from same production run as installed material.

6. MATERIAL:

   (1) Provide materials as required to install the complete access floor system.

   (2) Pedestals: Galvanized steel with flat bottom base plate, threaded supporting rod, and vibration-proof locknut to permit 1 1/2 inch minimum adjustment.

   (3) Supporting Stringers: Bolted type, consisting of steel channels, box, or T-sections.

   (4) Floor Panels: Galvanized-steel top sheet and bottom pan with wood or concrete core.

   (5) Floor Panel Finish: Manufacturer's standard 1/16 inch thick melamine phenolic laminate in accordance with NEMA LD3. Panel finish to be factory applied. Edge panels with trim. Laminate shall be equal to Nevamar ST-6-1 gray Starlite.

   (6) Floor Panel Finish Adhesive: Moisture-resistant type recommended by floor finish manufacturer.

   (7) Lateral Bracing: Provide materials required by manufacturer.

   (8) Panel Lifting Device: Manufacturer's standard type recommended for panel type.

   (9) Grounding Connectors: Manufacturer's standard grounding clips for panel and stringers and cable clamps as shown on the approved shop drawing detail.

   (10) Cable Cutout Protection: Manufacturer's standard edge trim, self extinguishing.

7. INSTALLATION:

(1) General: Install components in accordance with manufacturer's instructions. Floor panel layout shall be as shown on the architectural floor plan unless approved otherwise by the COR.

(2) Pedestals: Secure pedestal base plate to subfloor with adhesive or mechanical fasteners. Install additional pedestals where floor system grid pattern is interrupted, and at cutouts.

(3) Supporting Stringers and Floor Panels: Install stringers and floor panels solidly on pedestals. Maximum out-of-level tolerance 1/16 inch in 10 feet. Seal field-cut panels with edge trim.

(4) Lateral Bracing: Install bracing members. This could also involve welding of pedestals and mechanical fastening of base plates.

(5) Cable Cutouts: Field cut holes in floor panels, as directed by the COR, for installation of control equipment. Include edging material for cable cutouts and for 10 cutouts to be made by Western in the future.

(6) Grounding: Provide positive electrical earth grounding of entire access floor system. Connect system to building ground at all four corners of control room. Refer to the Arrangement, Conduit and Grounding drawing (4000 series).

(7) Provide additional pedestals at cutout panels.

(8) Protection: Protect access flooring finish from rolling loads during equipment installation with 1/2 inch plywood, OSB, or as approved by the COR.

SECTION 11.11--EQUIPMENT

11.11.1 EMERGENCY SPRAY:

1. GENERAL: Provide a portable emergency spray unit complete with accessories.

2. SUBMITTALS: In accordance with Section 11.1.2 “Submittals”.

   (1) Product Data: Include manufacturer's name, catalog designation, illustrations, and specifications.

   (2) Maintenance Data: Provide manufacturer’s maintenance instructions for emergency spray.

3. MATERIAL: Portable emergency spray unit shall be a self-contained unit and provide 15 minute flow from eyewash and 3 1/2 minute flow from hose spray. Unit shall meet the requirements of ANSI Z358.1 for an emergency eyewash, with combination eyewash/hand-held drench hose capability, and shall be complete with wall-mounting rack, equal to the following:

   (1) Model S19-690 by Bradley, 10 gallon capacity.
   (2) Haws Model 7602.10, 10 gallon capacity.

SECTION 11.12--MECHANICAL

11.12.1 MECHANICAL, GENERAL:

1. GENERAL:

   (1) Requirements: Provide mechanical systems as specified in these paragraphs and as shown on the drawings.

   (2) Accessibility: Install mechanical material and apparatus in such a manner that parts requiring inspection, adjustment, and maintenance shall be readily accessible.

   (3) Cutting of Framing and Structure: Obtain approval of the COR prior to cutting or removing any structural members.

   (4) Vibration and Noise Isolation: Isolate moving parts from ductwork and building structure. Objectionable equipment noise and vibration shall be corrected.

   (5) Equipment Finish and Painting: Furnish mechanical equipment and material with the manufacturer's standard finish. Repair damaged painted surfaces in accordance with manufacturer's instructions and in accordance with Standard 12 - “Painting”.

   (6) Manufacturers: Equipment manufacturers shall be as shown on the drawings, or approved equal.

   (7) Access Panels: Include access panels in ceiling where necessary to access mechanical equipment for maintenance. Coordinate location, size, and color of access panels with the COR; necessary ceilings shall be as specified in Section 11.5.7 “Ceiling Access Door”.

   (8) Installation: Coordinate installation of mechanical equipment with other trades.

   (9) Properly size and locate all anchors, chases, recesses, and openings required for the proper installation of the work. Typical hanging details are shown on the drawings.

2. SUBMITTALS: Submittals shall be in accordance with the product data, installation data, maintenance material, test reports, and calculations parts of Section 11.1.2 “Submittals”. Submit to Western, for approval, complete sets of checked and coordinated data for all equipment. Data shall include manufacturer's name, equipment model number, manufacturer's catalogs, specifications, detail descriptions, dimensions, drawings, photographs or cuts, wiring and control diagrams, specific data as itemized below for particular types of equipment, parts lists of replaceable components, installation, operation and maintenance instructions, and other information necessary to show compliance with these specifications. Coordinate submittals with drawings and clearly indicate symbol designation for each piece of equipment. Data required for particular types of equipment are as follows:

   (1) Refrigerant Cooling and Electric Heating Coils: Material, rows, size, pressure rating, and manufacturer's standard rating table or calculations indicating performance at rated conditions.

   (2) Servicing, Adjusting, and Testing: Adjustment results.

   (3) Balancing and Adjusting: Balancing report.

   (4) Compressor-Condenser Units: Product data, equipment construction, motor data, efficiency, controls, installation data, warranties, maintenance material, operation and maintenance

data, spare parts list, and manufacturer's standard rating tables or calculations indicating cfm, static pressure, rpm and capacity.

(5) Air-Handling Units (DX Fan Coil Type): Product data, equipment construction, motor data, efficiency, controls, installation data, warranties, maintenance material, operation and maintenance data, spare parts list, and manufacturer's standard rating tables or calculations indicating cfm, static pressure, rpm and capacity.

(6) Dampers: Product data, material, and dimensions.

(7) Registers, Grilles, and Diffusers: Product data. Data shall include configuration, capacities, construction, size, cfm, metal gauge, and finish.

(8) Control Equipment: Product data.

(9) Heat Pump Units: Product data, equipment construction, motor data, efficiency, controls, installation data, warranties, maintenance material, operation and maintenance data, spare parts list, and manufacturer's standard rating tables or calculations indicating cfm, static pressure, rpm and capacity.

(10) Wall Exhaust Fan: Product data, equipment construction, motor data, controls, installation data, capacity rating, dimensions, and operations and maintenance data.

3. DRAWINGS: Drawings indicate general arrangement of material and equipment. Sizes of equipment are as indicated on the drawings and are based on equipment specified in drawing schedules. Field verify all dimensions, locations, and levels; review architectural, structural, and electrical drawings; and adjust work to conform to all conditions shown therein.

4. CODES AND STANDARDS:

(1) Mechanical Equipment: Installation of material and equipment shall conform to manufacturer's recommendations and applicable local codes. Fire Protection and Safety requirements shall also comply with the National Board of Fire Underwriters standards, the National Fire Protection Association standards, and the local Authority Having Jurisdiction. Air delivery rating of fans shall conform to, or exceed, the standards established by AMCA. Welding shall be performed by qualified welders in accordance with AWS recommendations.

(2) Electrical Appliances, Apparatus, and Devices: Electrical appliances shall be UL approved and listed. Electrical apparatus and devices forming a part of the mechanical equipment and required for the operation of the systems, including wiring, shall be in accordance with the best modern practices and shall conform to and be installed under the codes and standards specified in Section 11.13 "Service Building Electrical".

(3) Motors: Motors shall be rated in accordance with NEMA standards. Horsepower ratings shall be such that motors will furnish the specified horsepower requirements without exceeding the nameplate rating and without benefit of the service factor. Based on an ambient temperature of 104° F (40°C), the temperature rise rating for the type motor enclosure and insulation class shall not exceed the temperature rise listed in the latest NEMA standards for tests and performance of motors.

(4) Ductwork: Installation of ductwork shall be in accordance with SMACNA.

5. MOTORS/ELECTRICAL:

(1) Motors:

1) General: Minimum motor horsepower ratings are specified or scheduled on the drawings. Minimum requirements for all motors are:

a. Constructed for an operating efficiency greater than 86 percent at work site altitude; dustproof/leakproof bearing rings; built to NEMA standards; factory balanced; open drip-proof; thermal overload protection.

All motors shall have a minimum of 1.15 service factor at altitude and 85 percent, or better, power factor. Additional requirements for motors and starting equipment appear throughout these specifications as they pertain to specific equipment.

2) Voltage Ratings: All motors 1/2 hp and smaller shall be 120 VAC, single phase. Motors larger than 1/2 hp and smaller than 1 hp shall be the voltage and phase shown on the drawings. Motors 1 hp and larger shall be 480 VAC, 3 phase, except as noted on the drawings.

3) Size Difference: On submitted equipment where motors are larger than specified, the Contractor is responsible to coordinate with all involved trades to verify correct wire size, breaker size, voltage, phase, and any other change required in the electrical system.

(2) Electrical:

1) General: Provide motors, starters, and all necessary control devices such as pushbutton stations, speed controls, transformers, timers and relays as required for proper operation of all equipment furnished under this section. Wires, cables, conduits, conduit fittings, and disconnect switches for mechanical equipment shall be installed in accordance with the mechanical equipment manufacturer's requirements and requirements of Section 11.13.1 “Service Building Electrical”. Installation and operation of the controls for the mechanical equipment shall meet the requirements of the mechanical equipment manufacturer and these specifications.

(3) Identification: Provide permanent identification for each switch and/or pushbutton station furnished herein. Identification may be either engraved plastic sign permanently mounted to wall below switch, or stamping on switch cover plate. All such identification signs and/or switch covers in finished areas shall match other hardware in the immediate area.

(4) Control Voltage: Maximum allowable control voltage is 120 VAC. Fully protect control circuit conductors in accordance with National Electrical Code.

(5) Motor Protection: All 3 phase motors shall have overload protection in all three phases.

6. SLEEVES: Place sleeve in forms of walls, floor slabs, and partitions for passage of all piping installed under this section. Install sleeves through exterior walls so as to provide a waterproof installation. Obtain the COR's approval before setting sleeves in or through reinforced slabs, beams, columns, or other structural members. All floor penetrations shall be made watertight.

Piping passing through walls or ceilings shall be installed to prevent passage of smoke and maintain fire rating.

Where pipes or ducts pass through concrete or masonry construction, install sleeves accurately and set permanently in place.

The Contractor shall insure that during the placement of the concrete, the location of the sleeves is not disturbed.

Cut all openings for which sleeves are omitted with rotary type drill or other method as approved by the COR. Holes cut with pneumatic or electric hammer will not be accepted.

7. ACCEPTANCE DEMONSTRATION: Upon completion of the work, at a time designated by the COR, demonstrate the operation of all mechanical equipment to the COR and his representatives.

8. CLEANUP: Remove all material, scrap, and other waste caused by installations, and leave premises in a clean, orderly condition. At completion, all equipment and related items shall be thoroughly cleaned and all residues from the inside and outside surfaces removed. All damaged finishes shall be repaired.

9. MAINTENANCE SERVICE CONTRACT: Upon substantial acceptance of the mechanical system, the Contractor shall provide qualified personnel to maintain and service the full HVAC control system, and the HVAC mechanical systems for a period of 1 year. Maintenance shall be in accordance with the approved maintenance data submitted under Section 11.1.3 “Operation and Maintenance Data”.

11.12.2 SERVICING, ADJUSTING, AND TESTING:

1. GENERAL: Provide material and equipment required for servicing, adjusting, and testing mechanical equipment. The Contractor shall retain ownership to all servicing and testing equipment.

2. SERVICING: After completing installation of mechanical systems, clean apparatus, and lubricate moving parts as required.

   Check equipment for correct installation, electrical connections, and other conditions requiring corrective measures. Equipment shall be serviced prior to operating the system. Replace air filters with new filters not more than 5 days prior to final inspection.

3. ADJUSTING: Check and adjust mechanical equipment and linkages, moving parts, control, safety, and overload devices to assure proper operation.

   Calibrate controls and check for accuracy. Adjust damper operators to function without binding. Adjust air-handling and compressor-condenser unit controls to operate at the conditions specified without excessive cycling. Safety controls shall be checked and adjusted as required.

4. ADJUSTMENT RESULTS: After final adjustment, equipment set points shall be tabulated and furnished to the COR. Final adjustment tabulation shall include voltage and amperes for motors and all settings on operating controls and safety devices for the mechanical systems.

5. TESTING, EVACUATING, AND CHARGING OF REFRIGERANT LINES: After installing the refrigeration systems and before applying pipe insulation, refrigerant circuits shall be pressure tested for leaks, completely evacuated, and then charged with refrigerant. Perform pressure testing with anhydrous carbon dioxide or nitrogen. Oxygen or acetylene gas shall not be used. Test pressures shall exceed 300 psi in the high side and 150 psi in the low side of the system, and test pressure shall be maintained for a period of not less than 8 hours after all leaks have been stopped. Evacuation of systems shall be made with an auxiliary vacuum pump capable of pulling an almost perfect vacuum and connected to both sides of the thermostatic expansion valves. Refrigeration compressors shall not be used to evacuate the systems. Charge refrigerant circuits with refrigerant through high side piping until it can be determined that the proper amount of refrigerant has been added. After system charging and operation testing, close charging valves and cap charging connections.

11.12.3 BALANCING AND ADJUSTING:

1. GENERAL: Balance system in accordance with SMACNA guidelines. All equipment used in balancing procedure shall have been calibrated within 1 year.

2. AIR SYSTEMS: Adjust control dampers, diffusers, registers, and sheaves for the delivery and distribution of air quantities shown on the drawings.

   Adjust exhaust and return air systems for air quantities shown on the drawings and the proper relationship between supply and exhaust established.

   Adjust distribution system to obtain uniform space temperatures free from objectionable drafts and noise within the capabilities of the system.

   Before making adjustments, check systems for such items as dirty filters, duct leakage, filter leakage, damper leakage, equipment vibrations, and correct damper operations. Adjust fan systems, ductwork, registers, control dampers, and diffusers to deliver design air quantities within plus or minus 5 percent.

   Individual air outlets, when one of three or more serves a space, may have a tolerance of 10 percent from the average. Designed cubic feet per meters (cfm) is based on filters being approximately 50 percent loaded. Pressure drop across filters during balancing shall be a minimum of 0.2-inch water gauge. After balancing is completed, check motor amperage with filters clean.

3. BALANCING REPORT: After adjustments are made, prepare a detailed report and submit to the COR for approval. Submit a copy of the report to the Civil Engineer. Final acceptance will not be made until a report acceptable to Western is received. Western may spot check the report by comparing it with the actual system capacities prior to final acceptance.

   Report shall include the following:

   (1) Operational Data: Data sheets showing air quantity of round and rectangular ducts using velocity pressures with traverses across ducts in accordance with SMACNA testing, adjusting, and balancing requirements. Data sheets showing amount of air handled at each opening, instrument used, velocity readings, and manufacturer free area factors. Data sheets showing discharge air temperature, fresh air temperature, and return air temperature to each air-handling unit for both heating and cooling modes of operation.

   (2) Equipment data sheets showing calibration of equipment within 1 year prior to service; make and size of fans, motors, and drives. Include supply fans and exhaust fans. Include fan cfm inlet and outlet pressures, pressure drop across filters, measured motor current, and voltage for each piece of equipment.

   (3) Other Data: Statement outlining any abnormal or notable conditions not covered in above data.

4. MECHANICAL SYSTEM STARTUP AND TESTING: Two weeks prior to startup and testing of all mechanical systems, notify the COR. Western will have a representative present during testing period and will certify that the systems are acceptable or unacceptable.

5. SYSTEM OPERATIONAL MANUAL: Develop a simplified description of the operation of all systems and function of each piece of equipment with each system. These system descriptions shall be supported with a schematic flow diagram and an explanation of control sequence. Place descriptions, flow diagrams, and control sequences in a manual, and submit three copies to

Western. Manual shall also include detailed outline of preventative maintenance and inspections that should be performed by Western and which should be done with outside service.

11.12.4 COMPRESSOR-CONDENSER UNITS (SPLIT-SYSTEM DX FAN COIL UNITS):

1. GENERAL: Provide vertical-discharge type, air-cooled, compressor-condenser units each complete with housing, compressor, crankcase heater, condenser coil, refrigerant piping and accessories, fan, fan guard, motor, disconnect switch, safety and operating controls, control panel, and all accessories required for installation and operation.

   Compressor-condenser units shall be equipped with low-ambient package and winter start control to operate at outdoor air temperatures down to 35°F (2° C).

   Each compressor-condenser unit and air-handling unit specified in Section 11.12.5 “Air-Handling Units” shall be matched components with the capacity shown on the drawings.

2. MATERIAL:

   (1) Housings: Contain and support components of compressor-condenser units within a baked enamel finished metal housing. Housings shall be weatherproof and have access doors for maintenance and inspection. Construct housings of corrosion-resistant material such as galvanized steel. Housings shall include air inlet coil guards to protect the condenser coils. Openings shall be provided for power and refrigerant connections.

   (2) Compressors: Compressor shall be high efficiency scroll type with constant discharge flow and the ability to start under any system load. Compressor motors shall be of sufficient size to fulfill the brake horsepower requirements without exceeding the nameplate rating and without benefit of the service factor. Motors shall have current- and thermal-overload protection. Compressor speed shall not exceed 3,500 rpm.

   (3) Condenser Coils: Refrigerant condenser coils shall consist of copper or aluminum fins metallically or mechanically bonded to nonferrous tubing. Coil shall be factory leak tested at 450 psi minimum. Each condenser coil shall provide a minimum of 6°F (-14° C) sub-cooling to prevent liquid flashing to vapor before reaching the expansion valve. Coil shall be accessible for cleaning.

   (4) Condenser Fans: Fans shall be direct-drive propeller type with a maximum 1,200 rpm. Fans and drives shall be constructed of corrosion-resistant material or protected properly to resist corrosion. Fans shall be furnished with a protective guard and shall discharge the air vertically upward.

   (5) Motors: Condenser fan motors shall be across-the-line, full-voltage starting, constant-speed, induction type suitable for continuous operation. Motors shall be rated for the condensing unit or furnished with transformer sufficient to meet the requirements. Based on an ambient temperature of 122° F (50°C), the temperature rise rating for the type of motor enclosure and insulation class shall not exceed the temperature rise listed in the latest NEMA standards for test and performance of motors.

   (6) Controls: Contain operating and safety controls furnished with each unit within the unit housing. Internal controls shall include high- and low-pressure cutouts, time delay relay, high- and low-temperature cutouts, contactors, relays, and motor protection. Furnish external control equipment in accordance with Section 11.12.15 “Control Equipment”.

   (7) Refrigerant Accessories: Furnish each refrigerant circuit with service valves, charging connections at the compressor-condenser unit, and accessories in accordance with Section 11.12.11 “Refrigerant Accessories”.

(8) Disconnect Switches: Heavy-duty type in accordance with Section 11.13.1 “Service Building Electrical” and as shown on the drawings.

3. INSTALLATION: Assemble, level, and install air-cooled, compressor-condenser units as shown on the drawings. Make power and piping connections to the units in such a manner to avoid physical damage and interference with access for servicing and maintenance. Install disconnect switch on the building wall adjacent to each unit as shown on the drawings.

11.12.5 AIR-HANDLING UNITS (DX FAN COIL TYPE):

1. GENERAL: Provide horizontal commercial packaged-type air-handling units, complete with housing, thermostatic expansion valves, direct expansion evaporator coil, drain pan, fan and drive motor, electric heating coil, disconnect switch, filter rack, return air mixing box with control dampers and grille, and accessories required for installation and operation. Air-handling unit's cooling capacity shall be rated with the compressor-condenser units specified in Section 11.12.4 “Compressor-Condenser Units” or the heat pump units specified in Section 11.12.18 “Heat Pump Units” whichever is applicable. Electric heating coils shall have a minimum rated capacity as shown on the drawings.

2. MATERIAL:

(1) Housings: Contain and support air-handling unit components within a finished baked enamel metal housing. Construct housings of corrosion-resistant material and insulated on the inside. Insulation shall be cleanable. Filters, motor, drive, thermostatic expansion valves, and coil connections shall be readily accessible via a side or top housing panel.

(2) Evaporator Coils: Refrigerant evaporator coils shall consist of aluminum fins metallically or mechanically bonded to nonferrous tubing. Coils shall include properly selected distributing heads.

Coils shall be rated for 250 psi minimum working pressure and sized for 500 fpm maximum air velocity.

(3) Drain Pans: Construct drain pans from corrosion-resistant material and include drain connections for attachment to the condensate drains. Drain pans shall be integral with the unit.

(4) Fans and Drives: Air-supply fans shall be the centrifugal, direct-drive or belt-drive type. Fans shall be rated as required in the “Codes and Standards” subparagraph of Section 11.12.1. “Mechanical, General” and have an outlet velocity not exceeding 1,000 fpm.

(5) Fan Efficiency: The fan operation shall be evaluated from fan and system characteristic curves. Required cfm shall be acquired at a fan speed that will not blow condensate from the drain pan. The following design criteria shall be applied when sizing fans:

1) The operating point shall be to the right of the peak fan pressure to avoid pressure and volume fluctuations with accompanying noise and uneven motor loading.

2) A fan with a steep pressure curve shall be chosen to avoid wide volume changes with changes in the duct/pipe loss.

3) The operating point shall be within 5 percent of the maximum efficiency to minimize required horsepower.

(6) Motors: Motors shall be the across-the-line, full-voltage starting, constant-speed induction type suitable for continuous operation.

Horsepower nameplate rating shall be a minimum of 115 percent of brake horsepower required at the tabulated performance.

Based on an ambient temperature of 104° F (40°C), temperature rise rating for the type of motor enclosure and insulation class shall not exceed the temperature rise listed in the latest NEMA standards for test and performance of motors.

(7) Electric Heating Coils: Furnish heating coils with frame, terminal blocks, cutouts, internal wiring, and fusing. Heating elements shall be approved helix-wound, alloy resistor wire.

(8) Thermal Cutouts: Furnish equipment heating coils with thermal cutouts properly located and adjusted to protect the heating elements. Thermal cutout contacts shall be normally closed and shall open on excessive temperature. Thermal cutouts shall be automatic and manual reset types and provided with neat and inconspicuous reset knobs that can be operated without use of tools.

(9) Refrigerant Accessories: Furnish each refrigerant circuit with service valves and accessories in accordance with Section 11.12.11 “Refrigerant Accessories”.

(10) Disconnect Switches: Heavy-duty type in accordance with Section 11.13.1 “Service Building Electrical” and as shown on the drawings.

3. INSTALLATION: Air-handling units, connecting refrigerant piping, and ductwork shall be assembled, aligned, leveled, and fastened in place. Suspend housings and ductwork by hanger rods and vibration isolators from structural steel shapes securely fastened to trusses, as shown on the drawings.

11.12.6 DAMPERS:

1. GENERAL: Provide manual-control-type dampers where shown on the drawings.

2. MATERIAL:

(1) General: All dampers shall have rigid bearings and locking quadrants which allow no rattling. Mark all damper rods to indicate the relative position of the damper blade with respect to the rod.

(2) Manual Control Dampers: Provide multi-blade-type dampers constructed of 14 gauge, galvanized sheet metal with flanges for duct mounting. Damper blades shall not exceed 6 inches in width and have corrugated-type construction using two sheets of 22 gauge galvanized sheet steel.

3. INSTALLATION: Install dampers in ductwork where shown on the drawings.

11.12.7 REGISTERS, GRILLES, AND DIFFUSERS:

1. GENERAL: Provide registers, grilles, and diffusers as shown on the drawings. All registers, grilles, and diffusers shall have manufacturer’s standard baked on-white enamel finish unless otherwise indicated.

2. MATERIAL:

   (1) Registers: Registers shall be duct mounted, constructed of steel with a 1 1/4 inch wide margin with front vanes as shown on the drawings. Registers shall have opposed blade volume control dampers and duct-mounted adjustable air turning device.

   (2) Grilles: Return grilles shall be duct mounted, constructed of steel with a 1 1/4 inch wide margin with front vanes as shown on the drawings.

   (3) Ceiling Diffusers: Ceiling diffusers shall be square neck and have a removable center core to fully adjust the air discharge pattern. Diffusers shall be constructed of steel, suitable for duct mounting, and equipped with volume dampers.

3. INSTALLATION: Install diffusers, grilles, and registers where shown on the drawings. Attach to ducts with screws.

11.12.8 AIR FILTERS:

1. GENERAL: Provide air filters complete with filter-support frame, and all accessories required for installation, operation, and servicing.

2. MATERIAL: Air filters shall be 2 inch thick, dry, throw-away type. Filter media shall be fiberglass or equal, corrosion-resistant, fire-retardant, and shall not support bacteria growth and impart noticeable odor to the air. Filter media shall be enclosed in a frame suitable to support media during operation and handling. Clean filter resistance to airflow shall be a maximum of 0.12 inch water gauge at 800 fpm velocity. Provide three additional replacement filters.

3. INSTALLATION: Air filters and mounting channels shall be factory installed in air-handling units.

11.12.9 DUCTWORK:

1. GENERAL: Provide ductwork as shown on the drawings, complete with ducts, dampers, mixing filter sections, transition sections, return air plenums, flexible connectors, and all accessories required for installation and operation.

2. MATERIAL: Material shall be in accordance with ASTM A 527, with general requirements in accordance with ASTM A 525, minimum 22 gauge galvanized sheets.

   (1) Steel Sheets: Minimum 22 gauge galvanized sheets.

   (2) Structural Steel: ASTM A 36.

   (3) Filter Sections: Construct and brace each filter section to form a rigid unit capable of withstanding imposed loads without deflection, vibration, and noise. Filter access doors shall be constructed of 20 gauge steel, formed and gasketed to obtain airtight joints, and held in place with quick release fasteners.

   (4) Return Air Plenums: Construct return air plenums of 22 gauge galvanized steel sheets. Size shall be as shown on the drawings. Provide mounting flanges for control damper and return air grille.

   (5) Flexible Connectors: Flexible connectors shall be rated for operation at temperatures above 100°F and shall be made of neoprene-coated glass fabric weighing approximately 30 ounces per square yard. Flexible connectors shall not be over 4 inches long and shall be complete with devices suitable for attaching to equipment and ductwork. Flexible connectors shall be installed with sufficient slack to prevent the transmission of vibrations. Connecting equipment

and ductwork shall be self-supporting and shall not impart any twisting forces to the flexible connectors.

3. INSTALLATION: Joints shall be smooth, airtight, neat in appearance, and lapped in direction of airflow. Support ductwork to prevent sagging, distortion, and vibration. Suspend duct hangers from structural steel shapes as shown on the drawings. Sizes indicated on the drawings are inside dimensions. Actual sizes will be larger due to duct liner. Seal ducts in accordance with SMACNA low pressure standards. Sealants may include liquids, mastic, mastic plus tape, or gasketing as appropriate. The selection of the most appropriate sealant depends on joint configuration, clearances, surface conditions, temperature, the direction of pressure and preassembly, or post assembly placement. Any proposed application of external sealant to ductwork joints shall be approved by the COR prior to application of the sealant.

11.12.10a DUCT WRAP (FOR THERMAL INSULATION):

1. GENERAL: Provide 1 1/2 -inch-thick fiberglass duct wrap as indicated on the drawings.

2. MATERIAL: Duct wrap shall be a blanket of fiberglass, factory-laminated to a FRK vapor retarder facing. Duct wrap shall also meet the requirements of NFPA 90 for fire resistance. Thermal conductivity, K, shall not exceed 0.30 Btu per hour/square foot/F per inch at 75°F (0.043 W/m at 24°C).

3. INSTALLATION: Install duct wrap in accordance with the SMACNA Standard.

11.12.10b DUCT LINER (FOR ABSORBING NOISE):

1. GENERAL: Provide 1 inch thick fiberglass duct liner board in rectangular or square sheet metal supply air ducts as indicated on the drawings.

2. MATERIAL: Duct liner shall be a semi-rigid bonded board of fiberglass, coated with a flame-resistant coating. Duct liner shall have a flame spread rating of 25 or less and a smoke developed rating of 50 or less when tested in accordance with ASTM E 84. Duct liner shall also meet the requirements of NFPA 90 for fire resistance. Thermal conductivity, K, shall not exceed 0.24 Btu per hour/square foot/F per inch at 75°F (0.033 W/m at 24°C).

3. INSTALLATION: Install duct liner in accordance with the SMACNA Standard.

11.12.11 REFRIGERANT ACCESSORIES:

1. GENERAL: Provide refrigerant accessories including valves, sight glass and moisture indicators, filter dryers, expansion valves, suction strainers, and other required items for installation and operation. Refrigerant accessories are specified with and shall be furnished as a part of the compressor-condenser and air-handling units, or may be furnished and installed as specified below.

2. MATERIAL:

   (1) Valves: Refrigerant valves shall be solder type. Packed valves shall be back-seating type with wrench-wing seal caps. Packless valves may be either diaphragm or bellows type.

   (2) Sight Glass and Moisture Indicators: Sight glass and moisture indicators shall be the single- or double-ported type with solder connections and seal cap, and the same size as adjacent piping.

   (3) Filter Dryers: Filter dryers shall be the soldered-in type with a minimum capacity rating of 3 tons at 2 psi drop and shall be the same size as the adjacent piping.

(4) Expansion Valves: Thermostatic expansion valves shall be selected for use with the evaporator coils and compressor-condenser units and sized to prevent premature liquid flashing.

(5) Suction Strainers: Commercial quality.

3. INSTALLATION: Install refrigerant accessories in accordance with the manufacturer's recommendations. Clean equipment and solder joints in accordance with Section 11.12.12 “Refrigerant Piping”. Disassemble valves and other devices having bodies to be soldered before heating if seats, disks, or other parts cannot withstand soldering temperatures.

11.12.12 REFRIGERANT PIPING:

1. GENERAL: Provide refrigerant piping as shown on the drawings.

2. MATERIAL:

(1) Copper Tubing: ASTM B 88, ACR Type L, hard drawn, Class 2 for installation of refrigerant lines above ground. For underground installation use Type K, hard drawn, Class 2.

(2) Copper Tubing Fittings: ANSI B16.22.

(3) Pipe Hangers and Supports: Pipe hangers shall be the galvanized-steel clevis type with minimum 1-inch adjustment and complete with locknut. Wall supports shall be Unistrut channel with adjustable fastners or equal. Isolate supports and hangers from piping with nonmetallic gaskets.

3. INSTALLATION: Clean refrigeration piping joints with fine sand cloth, steel wool, or wire brush, and join with hard solder having a minimum melting point of 1,100°F (593°C). Refrigerant piping connections shall be made with a constant bleed of dry nitrogen through tubing to prevent oxidation and scale. Use mechanical tube benders for making bends and support tubing adequately to prevent distortion and sagging. Refrigerant lines shall slope down in the direction of refrigerant flow at 1/2 inch per 10 feet. Avoid pockets or low points which trap liquid, oil, or noncondensible gasses. Copper tubing in exterior wall sleeves shall be grouted for closure with sealant between tubing and sleeve for weather tightness.

11.12.13 CONDENSATE DRAINS:

1. GENERAL: Provide copper water pipe and fittings for condensate drains from cooling-coil drain pans as shown on the drawings.

2. MATERIAL:

(1) Copper Tubing: ASTM B 88, ACR Type L, Class 1, for condensate drains.

(2) Copper Tubing Fittings: ANSI B16.22.

(3) Pipe Hangers and Supports: Pipe hangers shall be rubber-covered at support. Galvanized-steel clevis-type with minimum 1 inch adjustment and complete with locknut. Wall supports shall be Unistrut channels with adjustable fastners or equal.

3. INSTALLATION: Clean copper tubing, fittings, and accessory equipment solder joints with fine sand cloth, steel wool, or wire brush and soldered where shown using flux and 95-5 or silver solder. Support tubing to prevent distortion and sagging. Condensate drains shall slope to the discharge point. Avoid pockets and low points. Copper tubing in wall sleeves shall be

weatherproofed with sealant between tubing and sleeve. Condensate drain shall be positioned such that condensate does not run down or splash on building.

11.12.14 VIBRATION ISOLATORS:

1. GENERAL: Provide suspension-type vibration isolators and hanger assemblies as shown on the drawings. Vibration isolation devices shall be selected so that the maximum movement of equipment from the static deflection point shall be 0.5 inches.

2. MATERIAL:

   (1) Rubber-in-Shear Type: Provide rubber-in-shear suspension type consisting of a rubber isolation element supported in a steel housing. Rubber-isolation-element housings shall be designed so the support will not fail with a failure of the rubber element.

   (2) Structural Steel: ASTM A 36.

   (3) Spring Type: Spring-type vibration isolators shall be freestanding and laterally stable without any housing and complete with 1/4 inch neoprene acoustical friction pads between base plate and support.

3. INSTALLATION: Install vibration isolators and hanger assemblies, where shown on the drawings, and securely fasten in place. All mountings shall have leveling bolts that shall be rigidly bolted to the equipment.

11.12.15 CONTROL EQUIPMENT:

1. GENERAL: Provide control equipment complete with all accessories required for installation and operation. Control equipment shall be designed to permit manual adjustment and calibration without using special tools. Sequence of control equipment operation is shown on the drawings.

2. MATERIAL:

   (1) Air-Handling Unit Thermostats: Thermostats shall be the two-position type, automatically controlling both heating and cooling; 24 VDC; have 50 to 90°F temperature range; and an adjustable differential range between 3 and 10°F.

   (2) Duty-Cycle Controller: Controller shall consist of a 7 day time switch and a 4PDT general purpose control relay mounted in a common enclosure.

   The switch shall be SPST, 120 VAC, with mechanical back-up of time clock function and manual operation of switch.

   The general purpose control relay shall be 4PDT, Type R, plug-in relay with contacts rated for 120 V ac, 28 V dc, 3-amp continuous, and coil rated for 120 V ac continuous duty. Relay shall be furnished with a screw terminal, plug-in type mounting socket. Relay and socket shall be Square D, Type R, Class 8501, RS-4 and NR-45, respectively, or equal. A spare relay shall be furnished.

   Enclosure shall be NEMA Type 1, designed for surface mounting and back conduit entry; sized to accommodate control relay, spare relay, and timer; and furnished with a hinged front cover.

3. INSTALLATION: Install control equipment where shown on the drawings. Install wall surface-mounted room thermostats and duty-cycle controller on outlet boxes 5 feet above the floor. Conceal electrical lines to thermostats and controller.

11.12.16 SEQUENCE OF OPERATION:

1. GENERAL: The Contractor shall comply with this sequence of operation in the control of the building heating and cooling system.

2. HEATING AND COOLING:

   (1) Air-Handling Units (AHU-1 and AHU-2) Operation: Both two-position thermostats (T-1 and T-2) shall automatically control heating and cooling, and a duty-cycle controller shall balance the operation of the air-handling units.

   Thermostat T-1 shall be set to maintain a space temperature of 72°F, with 4°F differential cooling, and a space temperature of 68°F, with 4°F differential heating.

   Thermostat T-2 shall be set to maintain a space temperature of 74°F, with 4°F differential cooling, and a space temperature of 66°F, with 4°F differential heating.

   Duty-cycle controller shall be set to alternate the control of the air-handling units by the thermostats once weekly as shown on the drawings.

   1) Duty-Cycle A (Control Relay Coil Deenergized): Thermostat T-1 shall control AHU-1 and thermostat T-2 shall control AHU-2.

   2) Duty-Cycle B (Control Relay Coil Energized): Thermostat T-1 shall control AHU-2 and thermostat T-2 shall control AHU-1.

   Each two-position thermostat shall operate the appropriate air-handling unit through a thermal sequence relay and initiate the cooling or heating system as required to maintain their respective set points for operation.

11.12.17 REFRIGERANT PIPE INSULATION:

1. GENERAL: Provide insulation on the refrigerant piping as described below. Protection shields shall be used at pipe hangers and pipe supports supporting insulated pipe. Paint exposed insulation to match adjacent surfaces.

2. MATERIAL:

   (1) Interior Insulation: Pipe insulation for refrigerant piping shall be as follows:

Pipe Size - Inches	Insulation - Inches
1/2 through 1	0.5
1 1/4 through 2	0.75
2 1/2 and on up	1.0

   Insulation shall be in preformed sections with a maximum thermal conductivity of not more than 0.24 BTU per hour/square foot/F per inch at 75°F (0.033 W/m at 24°C). Insulation shall have white kraft paper bonded to aluminum foil. Fittings shall be insulated with a premolded fiberglass insert and finished with a PVC cover. Fire and smoke hazard classification rating on composite insulation, jacket, and adhesive shall conform to NFPA 255, ASTM 84, and UL-723 as follows: flame spread rating not exceeding 25; fuel contribution not exceeding 50; smoke developed not exceeding 50.

(2) Exterior Insulation: Pipe insulation shall be as described under interior insulation above, except all insulation shall be a minimum of 1 inch thick. Aluminum shield suitable for outdoor use shall also be provided.

3. PREPARATION: Pipe surfaces shall be clean of oil, dirt, and other foreign material and shall be dry when insulation is applied.

4. INSTALLATION:

(1) General: Insulation shall not be applied until the piping system is tested and approved as required. It shall be continuous through all walls, ceilings, and studs.

(2) Vapor Sealing: Portions of the covering at joints and fittings shall be vapor sealed.

(3) Exposed Insulation: Exposed insulation shall be properly prepared for painting.

(4) Unions, Flanges, and Valves: Unions, flanges, and valves shall be insulated.

(5) End Joints: End joints shall be sealed with a 3 inch wide, factory-finished joint-sealing strip with pressure-sealing adhesive at fittings and valves.

(6) Insulation Jacket: Jacket for pipe insulation shall have a pressure-sealing lapped adhesive. Staples shall not be used except where absolutely necessary and shall be coated with a vapor barrier coating.

(7) Outdoor Usage: Insulation for outdoor use shall have an aluminum outer shell for protection from the ultraviolet rays or provide rigid insulation with a durable outer shell for ultraviolet radiation. Outer barrier shall not decrease thermal conductivity performance. Install in accordance with manufacturer's requirements.

11.12.18 HEAT PUMP UNITS:

1. GENERAL: Provide vertical-discharge type, air-cooled, heat pump units, each complete with housing, compressor, crankcase heater, condenser coil, refrigerant piping and accessories, fan, fan guard, motor, disconnect switch, safety and operating controls, control panel, and all accessories required for installation and operation.

Heat pump units shall be equipped with low-ambient package to operate at outdoor air temperatures between 30°F and 115°F (-1°C and 46°C).

Each heat pump unit and air-handling unit specified in Section 11.12.5 “Air-Handling Units” shall be matched components with the capacity shown on the drawings.

2. MATERIAL:

(1) Housings: Contain and support components of heat pump units within a finished metal housing. Housings shall be weatherproof and have access doors for maintenance and inspection. Construct housings of corrosion-resistant material such as galvanized steel. Housings shall include air inlet coil guards to protect the condenser coils. Openings shall be provided for power and refrigerant connections. Include drainage holes in base for moisture removal.

(2) Compressors: Compressor shall be high efficiency type with constant discharge flow and the ability to start under any system load. Compressor motors shall be of sufficient size to fulfill the brake horsepower requirements without exceeding the nameplate rating and without

benefit of the service factor. Motors shall have current- and thermal-overload protection. Compressor speed shall not exceed 3,500 rpm.

(3) Condenser Coils: Refrigerant condenser coils shall consist of copper or aluminum fins metallically or mechanically bonded to nonferrous tubing. Coil shall be factory leak tested at 450 psi minimum. Each condenser coil shall provide a minimum of 6° F (-14°C) sub cooling to prevent liquid flashing to vapor before reaching the expansion valve. Coils shall be accessible for cleaning.

(4) Condenser Fans: Fans shall be direct-drive propeller type with a maximum 1,200 rpm. Fans and drives shall be constructed of corrosion-resistant material or protected properly to resist corrosion. Fans shall be furnished with a protective guard and shall discharge the air vertically upward.

(5) Motors: Condenser fan motors shall be across-the-line, full-voltage starting, constant-speed, induction type suitable for continuous operation. Motors shall be rated for the condensing unit or furnished with transformer sufficient to meet the requirements. Based on an ambient temperature of 122°F (50° C) the temperature rise rating for the type of motor enclosure and insulation class shall not exceed the temperature rise listed in the latest NEMA standards for test and performance of motors.

(6) Controls: Contain operating and safety controls furnished with each unit within the unit housing. Internal controls shall include high- and low-pressure cutouts, time delay relay, high- and low-temperature cutouts, contactors, relays, and motor protection. Furnish external control equipment in accordance with Section 11.12.15 “Control Equipment”.

(7) Refrigerant Accessories: Furnish each refrigerant circuit with the following:

1) Service valves: Refrigerant valves shall be fully serviceable, brass, solder type, back seating, with wrench-wing seal caps. Service valves shall be capable of being fully shut off to allow pumping down the system.

2) Sight glass and moisture indicators: Sight glass moisture indicators shall be single or double ported type with solder connections, seal cap, and be the same size as adjacent piping.

3) Check and expansion Valves: Matched check and expansion valves specifically designed for heat pump systems shall be provided. Refrigerant flow control system will be acceptable in lieu of check and expansion valves.

4) Reversing valve: Four-way reversing valve for quick changeover from cooling to heating and heating to cooling. Valve shall be factory installed.

(8) Disconnect Switches: In accordance with Section 11.13.1 “Service Building Electrical” and as shown on the drawings.

3. INSTALLATION: Assemble, level, and install air-cooled, heat pump units. Provide steel shims as necessary to level units on sloped concrete slab. Make power and piping connections to avoid physical damage and interference with access for servicing and maintenance. Install disconnect switch on the building wall adjacent to each unit as shown on the drawings.

11.12.19 WALL EXHAUST FAN:

1. GENERAL: Provide side-mounted type, direct drive wall exhaust fan with back draft damper, and insect screen as indicated on the drawings. Capacity shall be as indicated on the equipment schedule. Fan shall have UL listed electrical components. Fan operates continuously.

2. MATERIAL:

   (1) Housing: Provide waterproof fan housing of heavy-gage spun aluminum. Provide housing with a rubber gromment internal wiring passage. Design housing to discharge air in a 360° pattern, away from the building. Fan shall have integral attachment collar or angle ring to receive through-the-wall sleeve.

   (2) Fan Wheel: Fan wheel shall be backwardly inclined and no overloading with integral cooling fans. Wheel shall have been statically and dynamically balanced at the factory. Fan assemblies shall be mounted on vibration eliminators for quiet operation.

3. INSTALLATION: Install fan where shown on the drawings and in accordance with manufacturer's instructions.

SECTION 11.13--SERVICE BUILDING ELECTRICAL

11.13.1 SERVICE BUILDING ELECTRICAL, GENERAL:

1. GENERAL: This section includes building lighting, electrical distribution, materials, methods and intrusion alarm systems.

   Provide building grounding, in accordance with Western Standard 9 “Substation-Electrical” and the drawings.

   Provide equipment for ac service entrance, ac distribution panels, conduit, wire and cable, in accordance with the project drawings, this specification, Western’s Standard 9 “Substation-Electrical”, Westerns Standard “WAPA ES 2.4” and Western’s Standard Drawings as is applicable to this project.

   Material shall conform with current applicable industry standards. Minimum requirements are the latest editions of UL, NEMA, ANSI, ICEA, IEEE.

   Work and material shall comply with the latest rules, codes and regulations of OSHA, NFPA, NESC and state and local laws and regulations.

   Conduit is not to be used for equipment ground. A separate insulated conductor is to be used for equipment ground.

   Temporary lighting equipment (in addition to the safety lighting systems), if required for the Contractor's work operations, shall be provided and removed by the Contractor.

2. DRAWINGS: The drawings indicate general arrangement of circuits and general locations of outlets, switches, panelboards, and other work. Circuit breaker, wire and conduit sizes shown on the drawings are based on equipment specified. Adjust breaker, wire and conduit sizes to match equipment furnished. Field verify all dimensions, locations, levels, and review architectural, structural, and mechanical drawings; and adjust work to conform to all conditions shown therein.

3. IDENTIFICATION: Major equipment components shall have manufacturer's name, address, model number, and serial number permanently attached in a conspicuous location.

4. SUBMITTALS: In accordance with Section 11.1.2 – “Submittals”, submit to Western complete material lists and manufacturer's specifications sheets for review. All proposed deviations from specifications must be clearly listed under a prominent heading titled “DEVIATIONS”. Submittals shall be required for the following:

   (1) Material Lists: Identifying information covering all building electrical material.

   (2) Luminaires: Manufacturer's specifications sheets including photometric data and ballast information.

   (3) Emergency Lighting Units: Manufacturer's specifications sheets.

   (4) EXIT Signs: Manufacturer's specifications sheets.

   (5) Intrusion detection devices: Manufacturer’s specification sheets.

5. CUTTING AND PATCHING: Cutting, channeling, chasing, or drilling of floors, walls, partitions, ceilings, or other surfaces necessary for proper installation, support or anchorage of raceways, outlets, or other electrical equipment shall be approved by COR. Damage to building, piping, equipment, or any defaced finish shall be repaired by skilled mechanics of trades involved.

6. ACCEPTANCE DEMONSTRATION: Upon completion of the work, at a time designated by Western, demonstrate the operation of entire electrical installation, including all special systems provided under this Standard.

7. CLEANUP: Remove all material, scrap, and other waste caused by electrical installations, and leave premises in a clean, orderly condition. At completion, all equipment, luminaires, and related items shall be thoroughly cleaned and all residue removed from the inside and outside surfaces.

11.13.2 LUMINAIRES:

1. GENERAL: Provide luminaires complete with all lamps, ballasts, luminaire fuses, luminaire wire and cord, anchor bolts, mounting brackets, hangers, and other material and accessories necessary to complete the installation of the luminaires.

2. MATERIAL: Luminaires shall conform to UL standards, shall be in accordance with the details and requirements shown on the drawings, and be equal to the specified in the luminaires schedule in which type letters refer to luminaire symbol letters shown on the lighting installation drawings.

   Luminaires requiring special modifications shall be furnished completely modified and prewired by the manufacturer.

   (1) Lamps: Shall be of the wattages and types shown in the luminaire schedule. The lamp ordering abbreviation is shown as the description of lamps in the schedule.

   (2) Ballasts for Fluorescent Lamps: Shall be energy saving, super-premium grade, and be high- (90 percent minimum) power factor type in accordance with UL standards.

   Ballasts shall be rated for operation on the voltage shown on the drawings.

   Each ballast shall have an automatic-reset (thermostatic) type thermal protector, Class P approval to meet NEC requirements, both UL and CBM labels, and a 2 year warranty.

   (3) Ballasts for High-Intensity Discharge Lamps: Shall be high- (90 percent minimum) power factor. High pressure sodium lamp ballasts shall be reactor or autotransformer type.

   (4) Luminaire Wire: Shall be 600 V, stranded, single-conductor copper. Insulation shall be of a quality equal or superior to that of the ballast leads. Luminaire wire shall be in accordance with NEC.

   (5) Painting: Luminaires shall be furnished with the manufacturer's standard finish. Repair damaged surfaces of finish to match color and composition of manufacturer's finish.

3. INSTALLATION: Assemble (including suspension hanger accessories), install, aim, adjust, and lock in position all luminaires as shown on the drawings and as approved by COR. Make all conduit, wiring, and grounding connections required to put the luminaires into normal operation.

11.13.3 EMERGENCY LIGHTING UNITS:

1. GENERAL: Provide emergency lighting units complete with batteries, cord and plug, mounting brackets, and other accessories necessary to complete the installation of the emergency lighting units.

2. MATERIAL: Emergency lighting units shall be fully automatic, all solid-state, and shall have no moving parts. Each unit shall have a 12 V sealed, rechargeable battery requiring no maintenance for a period of 10 years under normal operating conditions. Each unit shall have a solid-state

charger compatible with the battery installed, AC lockout, brownout protection, two adjustable 12 W lamps; and 3 foot minimum, 3 wire cord with plug. Battery recharge time shall be less than or equal to UL 924 standard.

The units shall operate on 120 V, 60 Hz, and shall have a means for testing the condition and status of lamps, battery and AC service. The units must provide emergency lighting for a minimum of 90 minutes when AC service is interrupted. Units are to be as listed in the schedule on the drawings

3. PAINTING: Emergency lighting units and wall mounting brackets shall be furnished with the manufacturer's standard finish. Repair damaged surfaces of finish to match color and composition of manufacturer's finish.

4. INSTALLATION: Install emergency lighting units at the locations shown on the drawings; and make all conduit, cable and wiring, and grounding connections required to put the emergency lighting units into normal operation.

11.13.4 WIRING DEVICES:

1. GENERAL: Provide wiring devices, complete with all cover plates, and other material and accessories necessary to complete the installation of the wiring devices.

2. MATERIAL: Wiring devices shall conform to UL standards and the following:

   (1) Lighting Switches: Meet or exceed NEMA and UL standards, are totally enclosed, ac rated, silent type, ivory finish, toggle type. Model number series are those of Hubbell. Single-pole switches model number HBL1221I, 20 amps, 120-277V; three-way switches model number HBL1223I, 20 amps, 120-277V; four-way switches model number HBL 1224I, 20 amps, 120-277V. Equivalent switches from Arrow-Hart, Bryant, P & S, Sierra, or General Electric are acceptable.

   (2) Fan Disconnect Switches: Interior fan disconnect switches are single-pole model number HBL1221I, 20 amps, 120-277V. Exterior fan switches are single-pole, model number HBL1221I, 20 amps, 120-277V, complete with weatherproof lift cover plate, model number CWP1CR.

   (3) Plug Receptacles: Meet or exceed NEMA and UL Standards, two pole, three wire grounding, 20 amp, 125 V, ivory finish, equal to Hubbell model series HBL5362I. Receptacles indicated as GFI/GFIC shall be equivalent to Hubbell GF5362I. All Receptacles are NEMA configuration 5-20R.

   (4) Cover Plates: Cover plates for interior wiring devices shall be made of stainless steel, with satin finish, furnished with stainless steel mounting screws equivalent to Hubbell model numbers S1 and S8 respectively. Cover plates for exterior receptacles (not GFI/GFIC) shall be zinc die-cast equivalent to Hubbell CWP8H. Cover plates for weatherproof GFI/GFIC duplex receptacles shall be zinc die-cast equivalent to Hubbell Catalog No. CWP26H.

3. INSTALLATION: Install wiring devices in outlet boxes at the locations shown on the drawings. Wiring connections shall be made up tight and devices set plumb. Use care in installing devices to prevent damage to device or wiring. Provide a cover plate to suit device installed.

   (1) Receptacles and switches:

1) Mounting Height: Dimension from finished floor to centerline of boxes, unless otherwise indicated on the drawings, are as shown below:

Lighting switches ..... 44 inches

Receptacles (long axis vertical) ..... 18 inches

Telephone outlet (long axis vertical) ..... 18 inches

Wall outlets over desks ..... 48 inches

Wall outlets over work benches ..... 48 inches

2) Outlets for special equipment shall be located to provide convenient connections to equipment.

11.13.5 DISCONNECT SWITCHES:

1. GENERAL: Provide disconnect switches complete with all material and accessories necessary to complete the installation.

2. MATERIAL: Heavy-duty type, 2 poles or 3 poles, 240 V, horsepower rated for motors, weather-tight enclosure for outdoor switches, fused or non-fused as required. Disconnect switches shall be General Electric, ITE, as shown on the drawings, or equal. All disconnect switches shall be of one manufacturer unless otherwise noted.

3. INSTALLATION: Install disconnect switches in general area of equipment and in an accessible location. Secure switches to supporting structure with approved fasteners. Verify size of switches for each installation. Wall-mounted switches shall be mounted such that the top of the switch is 6 feet above finished floor or surface.

11.13.6 INTRUSION ALARM:

1. GENERAL: Provide material and devices necessary for the intrusion alarm system for the service building.

2. MATERIAL:

   (1) Door Switch: Provide a switch for each exterior door to the service building. Switch shall be as specified on the drawings. Install per manufacturer instructions and as defined on drawings.

   (2) Other Material: Provide mounting hardware, telemetering wire, conduit, junction boxes, fittings, and other material and accessories as shown on the drawings.

3. INSTALLATION: Install one switch for each exterior door so that the switch contacts operate (close) when the door is opened. Wires from the switches shall be routed in conduit to a junction box located under the accessible floor system panels. Wires shall be run from the junction box by others.

11.13.7 EQUIPMENT CONNECTIONS AND MISCELLANEOUS WORK:

1. GENERAL:

   (1) Work Included: Provide equipment connections and miscellaneous work in accordance with the drawings and these specifications.

2. AIR-CONDITIONING EQUIPMENT WIRING AND CONNECTIONS:

   (1) Air-Conditioning Equipment: Unless otherwise indicated on the electrical drawings, all air-conditioning equipment and controls shall be furnished and installed in accordance with the requirements of Section 11.12 “Mechanical”.

   (2) Equipment Connections: Provide all power and control circuits, wiring, conduit, outlets and related items, and provide final electrical connections to all equipment.

11.13.8 DIRECT- AND ALTERNATING-CURRENT DISTRIBUTION BOARDS:

Provide and install all equipment for ac service, ac distribution panels, conduit, wire and cable, in accordance with the drawings, this specification and Section 9.7.3 titled “Direct and Alternating Current Distribution Boards” of Western’s Standard 9 – “Substation-Electrical”, and Western Standard “WAPA ES 2.4” for Direct and Alternating Current Distribution Boards. Exceptions to the Standards, such as breaker interrupting rating (KAIC), are shown on the drawings.

11.13.9 BUILDING GROUNDING:

Provide building grounding, conduit, wire and cable in accordance with the drawings, this specification and Section 9.2 “Grounding, Conduit, and Low Voltage Cable Systems” of Standard 9 – “Substation-Electrical” and Western’s Standard Drawings.

11.13.10 EXIT SIGNS:

1. GENERAL: Provide exit sign units complete with (as required and specified on the drawings) batteries, cord and plug, mounting brackets, and/or other accessories necessary to complete the installation of the exit sign units. Exit signs can not contain any material determined to be hazardous, such as tritium gas.

2. MATERIAL: As specified on the drawings.

3. PAINTING: Exit sign units and wall mounting brackets shall be furnished with the manufacturer's standard finish. Repair damaged surfaces of finish to match color and composition of manufacturer's finish.

4. INSTALLATION: Install Exit Signs units at the locations shown on the drawings; and make all conduit, cable and wiring, and/or grounding connections required to put the emergency lighting units into normal operation

Western
AREA POWER
ADMINISTRATION

CONSTRUCTION STANDARDS

STANDARD 12
PAINTING

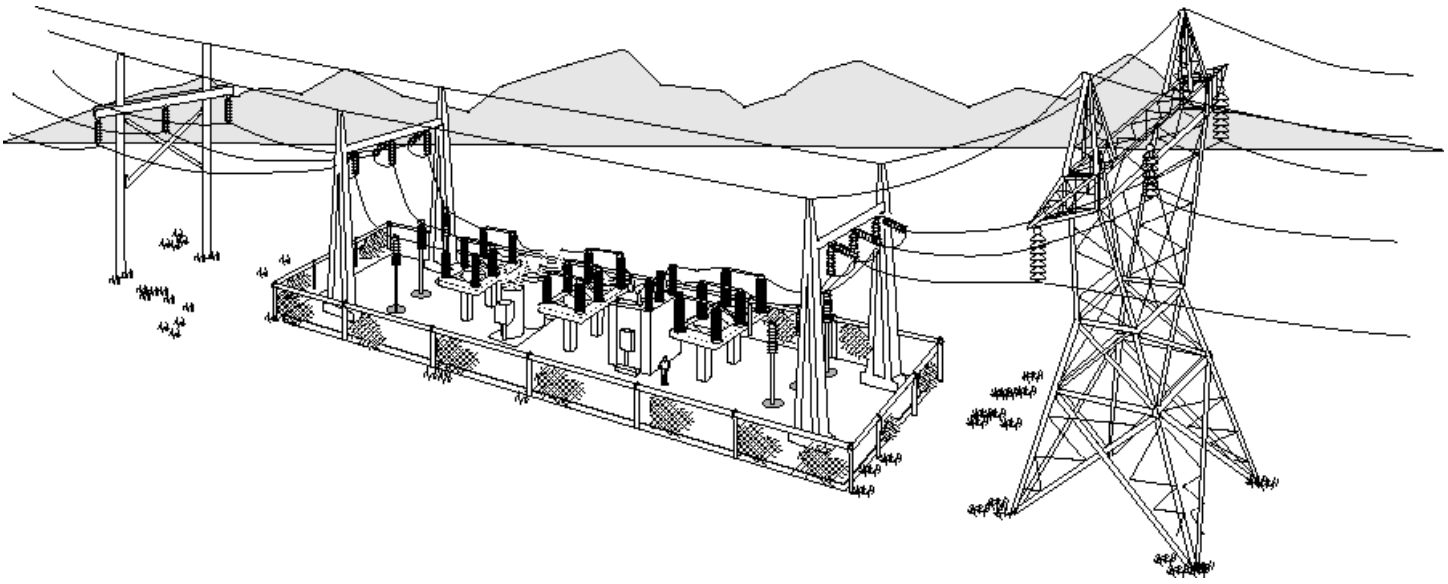

July 2009

SAFETY
A HABIT TO LIVE BY

STANDARD 12 – PAINTING

TABLE OF CONTENTS

Page Number

SECTION 12--PAINTING REQUIREMENTS 2

12.1.1 PAINTING, GENERAL 2
1. General 2
2. Submittals 2
3. Containers, Labels, and Storage 2
4. Protection 2

12.1.2 SURFACE PREPARATION 2
1. General 2
2. Metal Surfaces 2
3. Gypsum Wallboard 2

12.1.3 PAINT SYSTEMS 2
1. General 2
2. Electrical Equipment 3
3. Outdoor Electrical Equipment (Existing), Steel Structures, Exterior Surface of Metal Oil Storage Tanks, and Steel Members in Cattle Guards 3
4. Building Metalwork 3
5. Building Gypsum Wallboard 4
6. Manufacturer's Addresses 4

SECTION 12--PAINTING REQUIREMENTS

12.1.1 PAINTING, GENERAL:

1. GENERAL: Provide surface preparation, primer, paint, and other related work and material needed to complete the required painting. Painting processes shall meet Federal, State, and Local air emission regulations.

   Repair damaged areas of existing paint systems before applying intermediate coat and finish coats. For existing paint that does not match the colors listed below, the color shall be approved by the COR and be equivalent to the paint specified in this section.

2. SUBMITTALS: Submit two copies of the following manufacturer's data to the COR:

   (1) Primers and Paints: Manufacturer's technical information including paint label analysis, preparation of surfaces, spread rates, thinning instructions, coverage of paint, recommended number of coats, and application instructions.

   (2) Material Safety Data Sheets: Submit in accordance with Standard 1 - General Requirements, Section 1.4.1, "Safety and Health General".

3. CONTAINERS, LABELS, AND STORAGE: Primer and paint shall be in sealed containers labeled with manufacturer's name, type of paint, brand name, color designation, date of manufacturing, and instructions for mixing and reducing. Store primer and paint as recommended by the manufacturer.

4. PROTECTION: Protect nameplates, cover plates, and other surfaces from paint and damage. Repair damage as a result of inadequate or unsuitable protection. Furnish drop cloths, shields, or protective devices to prevent spraying or droppings from fouling surfaces not being painted, including surfaces within storage and preparation area.

12.1.2 SURFACE PREPARATION:

1. GENERAL: Surface preparation shall be in accordance with the manufacturer's technical information and as given below.

2. METAL SURFACES: Solvent clean surfaces by methods conforming to SSPC-SP 1. After solvent cleaning, prepare surfaces as follows:

   (1) Surfaces with weathered, gloss, or semigloss paint shall be lightly sanded.

   (2) Surfaces with loose paint and other foreign matter shall be cleaned by hand tool methods conforming to SSPC-SP 2 followed, if required, by commercial grade sandblasting conforming to SSPC-SP 6.

   (3) Unpainted surfaces shall be cleaned by commercial grade sandblasting conforming to SSPC-SP 6.

   (4) Surfaces shall be recleaned with solvent.

3. GYPSUM WALLBOARD: Repair damaged surfaces in accordance with Standard 11 - Buildings, Section 11.9.1, "Gypsum Wallboard Systems". Prior to sealing and painting, clean surfaces of dust and other foreign material.

12.1.3 PAINT SYSTEMS:

1. GENERAL: Selected paint system for any particular item shall consist of specified primer coat(s), intermediate coat, and finish coats from the same manufacturer.

2. ELECTRICAL EQUIPMENT: Indoor and outdoor electrical equipment shall have the manufacturer's standard ANSI 70 (gray), shop-applied, permanent paint system. Corrosion-resistant (galvanized, aluminum, copper, and etc.) surfaces shall not be painted. The paint system shall provide a minimum of 10 years corrosion-free protection. Inspect equipment surfaces at time of delivery and notify the COR of any damage. Repair damaged paint surfaces as recommended by the equipment manufacturer. Painting repair for Government-furnished equipment shall be paid in accordance with the contract clause titled "Changes".

3. OUTDOOR ELECTRICAL EQUIPMENT (EXISTING), STEEL STRUCTURES, EXTERIOR SURFACE OF METAL OIL STORAGE TANKS, AND STEEL MEMBERS IN CATTLE GUARDS:

   Paint system shall be equal to one of the following:

   (1) Keeler & Long, Inc. (Ferrous Metal and Galvanized Surfaces):

      1) Intermediate Coat: Tri-Polar Ferrite Primer No. 600, color red, flat, 2.0 to 3.0 mils dry film thickness.

      2) Finish Coats: Poly- Poly-Silicone Enamel KLPC1 Series, color sky gray, gloss, 1.5 to 2.5 mils dry film thickness.

   (2) Tnemec Company (Ferrous Metal and Galvanized Surfaces):

      1) Intermediate Coat: F.C. Typoxy Series 27, color light gray, flat, 4.0 to 6.0 mils dry film thickness.

      2) Finish Coats: Endura-Shield Series 1074, color light gray, gloss, 2.0 to 3.0 mils dry film thickness.

4. BUILDING METALWORK: Exterior and interior metalwork paint system shall be equal to one of the following:

   (1) PPG Industries, Inc. (Ferrous Metal Surfaces):

      1) Primer Coat: Rust Inhibitive Steel Primer 7-852, color white, 1.5 to 2.0 mils dry film thickness.

      2) First and Second Finish Coats: Industrial Gloss-Oil Interior/Exterior Enamels 7-814 Series, gloss, 1.5 to 2.0 mils dry film thickness per coat.

   (2) Sherwin-Williams Company (Ferrous Metal Surfaces):

      1) Primer Coat: Kem Kromik Universal Metal Primer B50WZ1 or B50HZ1, colors off white or buff, 3.0 to 4.0 mils dry film thickness.

      2) First and Second Finish Coats: Industrial Enamel, B54Z Series, gloss, 2.0 to 4.0 mils dry film thickness per coat.

   (3) PPG Industries, Inc. (Galvanized Surfaces):

      1) Primer Coat: Speedhide 6-209 Galvanized Steel Primer Interior/Exterior, color white, 2.0 mils dry film thickness.

      2) First and Second Finish Coats: Industrial Gloss-Oil Interior/Exterior Enamels 7-814 Series, gloss, 1.5 to 2.0 mils dry film thickness per coat.

(4) Sherwin-Williams Company (Galvanized Surfaces):

1) Primer Coat: Galvite HS B50WZ30, color off white, 3.0 to 4.5 mils dry film thickness.

2) First and Second Finish Coats: Industrial Enamel, B54Z Series, gloss, 2.0 to 4.0 mils dry film thickness per coat.

Primer coat is not required when metalwork is furnished with the manufacturer's standard, shop-applied primer. Repair damaged areas of primer before applying first and second finish coats.

5. BUILDING GYPSUM WALLBOARD: Interior gypsum wallboard walls, ceilings, and accessories shall be painted equal to one of the following:

(1) PPG Industries, Inc.:

1) Primer Coat: Speedhide 6-2 Quick-Drying Interior Latex Primer-Sealer, color white, flat, 350 to 450 square feet per gallon.

2) First and Second Finish Coats: Speedhide 6-714 Latex Dry Fog Spray Paint, semi-gloss, 200 to 350 square feet per gallon.

(2) Sherwin-Williams Company:

1) Primer Coat: PrepRite 200 Interior Latex Primer B28W200, color white, flat, 400 square feet per gallon.

2) First and Second Finish Coats: Super Save-Lite Dryfall Semi-Gloss B47W62, 260 square feet per gallon each coat.

6. MANUFACTURER'S ADDRESSES:

(1) Keeler & Long, Inc., 856 Echo Lake Road, Watertown, CT 06795.
(2) PPG Industries, Inc., One PPG Place, Pittsburgh, PA 15272.
(3) Sherwin-Williams Company, 101 Prospect Avenue, Cleveland, OH 44115.
(4) Tnemec Company, Inc., 6800 Corporate Drive, Kansas City, MO 64120

Western
AREA POWER
ADMINISTRATION

CONSTRUCTION STANDARDS

STANDARD 13

ENVIRONMENTAL QUALITY PROTECTION

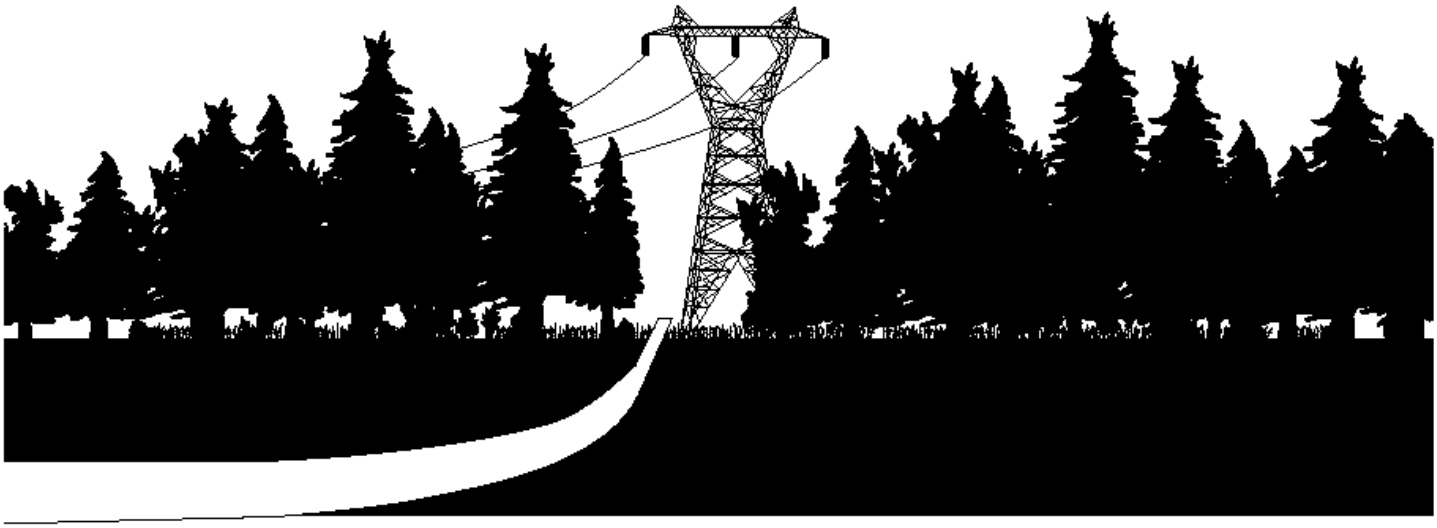

July 2009

SAFETY
A HABIT TO LIVE BY

STANDARD 13 - ENVIRONMENTAL QUALITY PROTECTION

TABLE OF CONTENTS

Page Number

SECTION 13.1--CONTRACTOR FURNISHED DATA 13-5
1. RECYCLED MATERIALS QUANTITY REPORT 13-5
2. RECOVERED AND BIOBASED MATERIAL PRODUCTS REPORT 13-5
3. RECLAIMED REFRIGERANT RECEIPT 13-5
4. WASTE MATERIAL QUANTITY REPORT: 13-5
5. SPILL PREVENTION NOTIFICATION AND CLEANUP PLAN (Plan) 13-5
6. TANKER OIL SPILL PREVENTION AND RESPONSE PLAN 13-5
7. PESTICIDE USE PLAN 13-5
8. TREATED WOOD UTILITY POLES AND CROSSARMS RECYCLING - CONSUMER INFORMATION RECEIPT 13-6
9. PREVENTION OF AIR POLLUTION 13-6
10. ASBESTOS LICENSES OR CERTIFICATIONS 13-6
11. LEAD PAINT NOTICES 13-6
12. WATER POLLUTION PERMITS 13-6
13. PCB TEST REPORT 13-6
14. OIL AND OIL-FILLED ELECTRICAL EQUIPMENT RECEIPT 13-6
15. OSHA PCB TRAINING RECORDS 13-6
16. CLEANUP WORK MANAGEMENT PLAN 13-6
17. POST CLEANUP REPORT 13-6

SECTION 13.2--ENVIRONMENTAL REQUIREMENTS 13-6

SECTION 13.3--LANDSCAPE PRESERVATION 13-6
1. GENERAL 13-6
2. CONSTRUCTION ROADS 13-6
3. CONSTRUCTION FACILITIES 13-7

SECTION 13.4--PRESERVATION OF CULTURAL AND PALEONTOLOGICAL RESOURCES 13-7
1. GENERAL 13-7
2. KNOWN CULTURAL OR PALEONTOLOGICAL SITES 13-7
3. UNKNOWN CULTURAL OR PALEONTOLOGICAL SITES 13-7

SECTION 13.5--NOXIOUS WEED CONTROL 13-8

SECTION 13.6--RECYCLED MATERIALS QUANTITIES 13-8
1. GENERAL 13-8
2. RECYCLED MATERIAL QUANTITY REPORT 13-8

SECTION 13.7-- USE OF RECOVERED AND BIOBASED MATERIAL PRODUCTS 13-8
1. RECOVERED MATERIAL PRODUCTS 13-8
2. BIOBASED MATERIAL PRODUCTS 13-9
3. RECOVERED AND BIOBASED MATERIAL PRODUCTS REPORT 13-9

SECTION 13.8--DISPOSAL OF WASTE MATERIAL 13-9
1. GENERAL 13-9
2. HAZARDOUS, UNIVERSAL, AND NON-HAZARDOUS WASTES 13-9
3. USED OIL 13-9
4. RECYCLABLE MATERIAL 13-9
5. REFRIGERANTS AND RECEIPTS 13-9

6. HALONS 13-10
7. SULFUR HEXAFLOURIDE (SF6) 13-10
8. WASTE MATERIAL QUANTITY REPORT 13-10

SECTION 13.9--CONTRACTOR'S LIABILITY FOR REGULATED MATERIAL INCIDENTS 13-10
1. GENERAL 13-10
2. SUPERVISION 13-10

SECTION 13.10--POLLUTANT SPILL PREVENTION, NOTIFICATION, AND CLEANUP 13-10
1. GENERAL 13-10
2. SPILL PREVENTION NOTIFICATION AND CLEANUP PLAN (Plan) 13-10
3. TANKER OIL SPILL PREVENTION AND RESPONSE PLAN 13-11

SECTION 13.11--PESTICIDES 13-11
1. GENERAL 13-11
2. ENVIRONMENTAL PROTECTION AGENCY REGISTRATION 13-11
3. PESTICIDE USE PLAN 13-11

SECTION 13.12--TREATED WOOD UTILITY POLES AND CROSSARMS RECYCLING OR DISPOSAL 13-11

SECTION 13.13--PREVENTION OF AIR POLLUTION 13-12
1. GENERAL 13-12
2. MACHINERY AIR EMISSIONS 13-12
3. DUST ABATEMENT 13-12

SECTION 13.14--HANDLING AND MANAGEMENT OF ASBESTOS CONTAINING MATERIAL 13-12
1. GENERAL 13-12
2. TRANSPORTATION OF ASBESTOS WASTE 13-12
3. CERTIFICATES OF DISPOSAL AND RECEIPTS 13-12

SECTION 13.15--MATERIAL WITH LEAD-BASED PAINT 13-12
1. GENERAL 13-12
2. TRANSFER OF PROPERTY 13-12
3. CERTIFICATES OF DISPOSAL AND RECEIPTS 13-12

SECTION 13.16--PREVENTION OF WATER POLLUTION 13-13
1. GENERAL 13-13
2. PERMITS 13-13
3. EXCAVATED MATERIAL AND OTHER CONTAMINANT SOURCES 13-13
4. MANAGEMENT OF WASTE CONCRETE OR WASHING OF CONCRETE TRUCKS 13-13
5. STREAM CROSSINGS 13-13

SECTION 13.17--TESTING, DRAINING, REMOVAL, AND DISPOSAL OF OIL-FILLED ELECTRICAL EQUIPMENT 13-13
1. SAMPLING AND TESTING OF INSULATING OIL FOR PCB CONTENT 13-13
2. PCB TEST REPORT 13-13
3. OIL CONTAINING PCB 13-14
4. REMOVAL AND DISPOSAL OF INSULATING OIL AND OIL-FILLED ELECTRICAL EQUIPMENT 13-14
5. OIL AND OIL-FILLED ELECTRICAL EQUIPMENT RECEIPT 13-14

SECTION 13.18--REMOVAL OF OIL-CONTAMINATED MATERIAL 13-14
1. GENERAL 13-14

2. CLEANUP WORK MANAGEMENT PLAN 13-14
3. EXCAVATION AND CLEANUP 13-14
4. TEMPORARY STOCKPILING 13-14
5. SAMPLING AND TESTING 13-14
6. TRANSPORTION AND DISPOSAL OF CONTAMINATED MATERIAL 13-15
7. POST CLEANUP REPORT 13-15

SECTION 13.19—CONSERVATION OF NATURAL RESOURCES 13-15
1. GENERAL 13-15
2. KNOWN OCCURRENCE OF PROTECTED SPECIES OR HABITAT 13-15
3. UNKNOWN OCCURRENCE OF PROTECTED SPECIES OR HABITAT 13-15

STANDARD 13 - ENVIRONMENTAL QUALITY PROTECTION

SECTION 13.1--CONTRACTOR FURNISHED DATA

1. RECYCLED MATERIALS QUANTITY REPORT: Submit quantities of recycled materials listed in Section 13.6, "Recycled Materials Quantities", to the COR prior to submittal of final invoice.

2. RECOVERED AND BIOBASED MATERIAL PRODUCTS REPORT: Provide the COR the following information for purchases of items listed in Section 13.7, "Use of Recovered and Biobased Material Products".

   (1) Quantity and cost of listed items <u>with</u> recovered or biobased material content and quantity and cost of listed items <u>without</u> recovered or biobased material content prior to submittal of final invoice.

   (2) Written justification of listed items if recovered material or biobased material products are not available: 1) competitively within a reasonable time frame; 2) meeting reasonable performance standards as defined in the Standards or Project Specifications; or 3) at a reasonable price.

3. RECLAIMED REFRIGERANT RECEIPT: A receipt from the reclaimer stating that the refrigerant was reclaimed, the amount and type of refrigerant, and the date shall be submitted to the COR prior to submittal of final invoice in accordance with Section 13.8.5, “Refrigerants and Receipts”.

4. WASTE MATERIAL QUANTITY REPORT: Submit quantities of total project waste material disposal as listed below to the COR prior to submittal of final invoice in accordance with Section 13.8.8, “Waste Material Quantity Report”.

   (1) Unregulated Wastes (i.e., trash): Volume in cubic yards or weight in pounds.

   (2) Hazardous or Universal Wastes: Weight in pounds.

   (3) PCB Wastes: Weight in pounds.

   (4) Other regulated wastes (e.g., lead-based paint or asbestos): Weight in pounds (specify type of waste in report).

5. SPILL PREVENTION NOTIFICATION AND CLEANUP PLAN (Plan): Submit the Plan as described in Section 13.10.2, "Spill Prevention Notification and Cleanup Plan”, to the COR for review and comment 14 days prior to start of work. Review of the plan is for the purpose of determining compliance with the specifications only and shall not relieve the Contractor of the responsibility for compliance with all Federal, State, and Local regulations.

6. TANKER OIL SPILL PREVENTION AND RESPONSE PLAN: Submit the Plan as described in Section 13.10.3, "Tanker Oil Spill Prevention and Response Plan”, to the COR for review and comment 14 days prior to start of work. Review of the plan is for the purpose of determining compliance with the specifications only and shall not relieve the Contractor of the responsibility for compliance with all Federal, State, and Local regulations.

7. PESTICIDE USE PLAN: Submit a plan as described in Section 13.11.3, “Pesticide Use Plan”, to the COR for review and comment 14 days prior to the date of intended pesticide application. Review of the plan is for the purpose of determining compliance with the specifications only and shall not relieve the Contractor of the responsibility for compliance with all Federal, State, and Local regulations. Within seven days after application, submit a written report in accordance with Standard 2 – Sitework, Section 2.1.1_5, “Soil-Applied Herbicide”.

8. TREATED WOOD UTILITY POLES AND CROSSARMS RECYCLING - CONSUMER INFORMATION SHEET RECEIPT: Submit treated wood utility poles and crossarms - consumer information sheet receipts to the COR prior to submittal of final invoice (see 13.12, “Treated Wood Utility Poles and Crossarms Recycling or Disposal”).

9. PREVENTION OF AIR POLLUTION: Submit a copy of permits, if required, as described in 13.13, “Prevention of Air Pollution” to the COR 14 days prior to the start of work.

10. ASBESTOS LICENSES OR CERTIFICATIONS: Submit a copy of licenses, certifications, Demolition and Renovation Notifications and Permits for asbestos work as described in 13.14, ”Handling and Management of Asbestos Containing Material” to the COR 14 days prior to work. Submit copies of certificates of disposal and/or receipts for waste to the COR prior to submittal of final invoice.

11. LEAD PAINT NOTICES: Submit a copy of lead paint notices with contractor and recipient signatures as described in 13.15, “Material with Lead-based Paint” to the COR prior to submittal of final invoice. Submit copies of certificates of disposal and/or receipts for waste to the COR prior to submittal of final invoice.

12. WATER POLLUTION PERMITS: Submit copies of any water pollution permits as described in 13.16, “Prevention of Water Pollution” to the COR 14 days prior to start of work.

13. PCB TEST REPORT: Submit a PCB test report as described in 13.17, “Testing, Draining, Removal, and Disposal of Oil-filled Electrical Equipment”, prior to draining, removal, or disposal of oil or oil-filled equipment that is designated for disposal.

14. OIL AND OIL-FILLED ELECTRICAL EQUIPMENT RECEIPT: Obtain and submit a receipt for oil and oil-filled equipment transported and disposed, recycled, or reprocessed as described in 13.17, “Testing, Draining, Removal, and Disposal of Oil-filled Electrical Equipment”, to the COR prior to submittal of final invoice.

15. OSHA PCB TRAINING RECORDS: Submit employee training documentation records to the COR 14 days prior to the start of work as described in 13.18.1.

16. CLEANUP WORK MANAGEMENT PLAN: Submit a Cleanup Work Management Plan as described in 13.18, “Removal of Oil-contaminated Material” to the COR for review and comment 14 days prior to the start of work. Review of the plan is for the purpose of determining compliance with the specifications only and shall not relieve the Contractor of the responsibility for compliance with all Federal, State, and Local regulations.

17. POST CLEANUP REPORT: Submit a Post-Cleanup Report as described in 13.18, “Removal of Oil-contaminated Material” to the COR prior to submittal of final invoice.

SECTION 13.2--ENVIRONMENTAL REQUIREMENTS

Comply with Federal, State, and local environmental laws and regulations. The sections in this Standard further specify the requirements.

SECTION 13.3--LANDSCAPE PRESERVATION

1. GENERAL: Preserve landscape features in accordance with the contract clause titled “Protection of Existing Vegetation, Structures, Equipment, Utilities, and Improvements.”

2. CONSTRUCTION ROADS: Location, alignment, and grade of construction roads shall be subject to the COR's approval. When no longer required, surfaces of construction roads shall be scarified to

facilitate natural revegetation, provide for proper drainage, and prevent erosion. If re-vegetation is required, use seed mixtures as recommended by Natural Resources Conservation Service or other land managing agency as appropriate.

3. CONSTRUCTION FACILITIES: Shop, office, and yard areas shall be located and arranged in a manner to preserve trees and vegetation to the maximum practicable extent and prevent impact on sensitive riparian areas and flood plains. Storage and construction buildings, including concrete footings and slabs, shall be removed from the site prior to contract completion. The area shall be re-graded as required so that all surfaces drain naturally, blend with the natural terrain, and are left in a condition that will facilitate natural revegetation, provide for proper drainage, and prevent erosion or transport of sediment and pollutants. If re-vegetation is required, use seed mixtures as recommended by Natural Resources Conservation Service or other land managing agency as appropriate.

SECTION 13.4--PRESERVATION OF CULTURAL AND PALEONTOLOGICAL RESOURCES

1. GENERAL: Do not remove or alter cultural artifacts or paleontological resources (fossils). Cultural artifacts may be of scientific or cultural importance and includes, but is not limited to bones, pottery, glass, projectile points (arrowheads), other stone or metal tools, historic buildings, and features. Paleontological resources can be of scientific importance and include mineralized animals and plants or trace fossils such as footprints. Both cultural and paleontological resources are protected by Federal Regulations during Federal construction projects. Contractor shall restrict all ground disturbing activities to areas that have been surveyed by Western for cultural or paleontological resources and as specified in accordance with Standard 1 – General Requirements, Sections 1.3.1 Rights-of-way and 1.3.2 Access to the Work and Haul Routes.

2. KNOWN CULTURAL OR PALEONTOLOGICAL SITES: Following issuance of notice to proceed, Western will provide drawings or maps showing sensitive areas located on or immediately adjacent to the transmission line right-of-way and/or facility. These areas shall be considered avoidance areas. Prior to any construction activity, the avoidance areas shall be marked on the ground in a manner approved by the COR. Instruct employees, subcontractors, and others that vehicular or equipment access to these areas is prohibited. If access is absolutely necessary, first obtain approval from the COR. Western will remove the markings during or following final cleanup. For some project work, Western will require an archaeological, paleontological or tribal monitor at or near cultural or paleontological site locations. The contractor, contractor's employees, and subcontractors shall work with the monitor to insure that sensitive areas are avoided. Where monitors are required, the monitor shall meet with the crew each morning to go over the day's work. The monitor will also conduct awareness training for all contractors prior to any work in the field. Untrained personnel shall not be allowed in the construction area. For sensitive areas requiring a monitor, the contractor may not access those areas without a monitor being present.

3. UNKNOWN CULTURAL OR PALEONTOLOGICAL SITES: On rare occasions cultural or paleontological sites may be discovered during excavation or other earth-moving activities.

   (1) Reporting: If evidence of a cultural or paleontological site is discovered, cease work in the area immediately and notify the COR of the location and nature of the findings. If a monitor is present, the monitor should also be notified. Stop all activities within a 200-foot radius of the discovery and do not proceed with work within that radius until directed to do so by the COR.

   (2) Care of Evidence: Protect the area. Do not remove, handle, alter, or damage artifacts or fossils uncovered during construction.

SECTION 13.5--NOXIOUS WEED CONTROL

Comply with Federal, State, and local noxious weed control regulations. Provide a "clean vehicle policy" while entering and leaving construction areas to prevent transport of noxious weed plants and/or seed. Transport only construction vehicles that are free of mud and vegetation debris to staging areas and the project right-of-way.

SECTION 13.6--RECYCLED MATERIALS QUANTITIES

1. GENERAL: Record quantities of material by category that is salvaged, recycled, reused, or reprocessed, including:

   (1) Transformers, Breakers: Weight without oil.

   (2) Aluminum Conductor – Steel Reinforced (ACSR): Weight in pounds or tons.

   (3) Steel: Weight in pounds or tons.

   (4) Aluminum: Weight in pounds or tons.

   (5) Copper: Weight in pounds or tons.

   (6) Other Metals: Weight in pounds or tons.

   (7) Oil: Gallons (separate by type - less than 2 ppm PCB, 2 to 50 ppm PCB, and 50 or greater ppm PCB).

   (8) Gravel, Asphalt, Or Concrete: Weight in pounds or tons.

   (9) Batteries: Weight in pounds.

   (10) Treated Wood Utility Poles and Crossarms: Weight in pounds.

   (11) Wood construction material: Weight in pounds.

   (12) Cardboard: Weight in pounds.

   (13) Porcelain Insulators: Weight in pounds.

2. RECYCLED MATERIAL QUANTITY REPORT: Submit quantities of recycled material by category to the COR prior to submittal of final invoice.

SECTION 13.7--USE OF RECOVERED MATERIAL AND BIOBASED MATERIAL PRODUCTS

1. RECOVERED MATERIAL PRODUCTS: If the products listed below or other products listed at http://www.epa.gov/epawaste/conserve/tools/cpg/products/index.htm are obtained as part of this project, purchase the items with the highest recovered material content possible unless recovered material products are not available: 1) competitively within a reasonable time frame; 2) meeting reasonable performance standards as defined in the Standards or Project Specifications; or 3) at a reasonable price.

   Construction Products:

   - Building Insulation Products

- Carpet
- Carpet cushion
- Cement and concrete containing coal fly ash, ground granulated blast furnace slag, cenospheres, or silica fume
- Consolidated and reprocessed latex paint
- Floor Tiles
- Flowable fill
- Laminated Paperboard
- Modular threshold ramps
- Nonpressure pipe
- Patio Blocks
- Railroad grade crossing surfaces
- Roofing materials
- Shower and restroom dividers/partitions
- Structural Fiberboard

2. BIOBASED MATERIAL PRODUCTS: If the products listed at http://www.biobased.oce.usda.gov are obtained as part of this project, purchase the items with the highest biobased content possible and no less than the percent indicated for each product unless biobased material products are not available: 1) competitively within a reasonable time frame, 2) meeting reasonable performance standards as defined in the Standards or Project Specifications, or 3) at a reasonable price.
NOTE: Western exempts purchase of bio-based transformers rated above 1 MVA until May 13, 2011 for performance reasons.

3. RECOVERED MATERIAL AND BIOBASED MATERIAL PRODUCTS REPORT: Provide the COR the following information for purchases of those items listed above:

   Quantity and cost of listed items with recovered or biobased material content and quantity and cost of listed items without recovered or biobased material content prior to submittal of final invoice.

   Written justification of listed items if recovered material or biobased material products are not available: 1) competitively within a reasonable time frame; 2) meeting reasonable performance standards as defined in the Standards or Project Specifications; or 3) at a reasonable price.

SECTION 13.8--DISPOSAL OF WASTE MATERIAL

1. GENERAL: Dispose or recycle waste material in accordance with applicable Federal, State and local regulations and ordinances. In addition to the requirements of the Contract Clause “Cleaning Up”, remove all waste material from the construction site. No waste shall be left on Western property, right-of-way, or easement. Burning or burying of waste material is not permitted.

2. HAZARDOUS, UNIVERSAL, AND NON-HAZARDOUS WASTES: Manage hazardous, universal, and non-hazardous wastes in accordance with State and Federal regulations.

3. USED OIL: Used oil generated from the Contractor activities shall be managed in accordance with used oil regulations.

4. RECYCLABLE MATERIAL: Reduce wastes, including excess Western material, by recycling, reusing, or reprocessing. Examples of recycling, reusing, or reprocessing includes, but is not limited to, reprocessing of solvents; recycling cardboard; and salvaging scrap metals.

5. REFRIGERANTS AND RECEIPTS: Refrigerants from air conditioners, water coolers, refrigerators, ice machines and vehicles shall be reclaimed with certified equipment operated by certified technicians if the item is to be disposed. Refrigerants shall be reclaimed and not vented to the

atmosphere. A receipt from the reclaimer stating that the refrigerant was reclaimed, the amount and type of refrigerant, and the date shall be submitted to the COR prior to submittal of final invoice.

6. HALONS: Equipment containing halons that must be tested, maintained, serviced, repaired, or disposed must be handled according to EPA requirements and by technicians trained according to those requirements.

7. SULFUR HEXAFLUORIDE (SF6): SF6 shall be reclaimed and not vented to the atmosphere.

8. WASTE MATERIAL QUANTITY REPORT: Submit quantities of total project waste material disposal as listed below to the COR prior to submittal of final invoice.

   (1) Unregulated Wastes (i.e., trash): Volume in cubic yards or weight in pounds.

   (2) Hazardous or Universal Wastes: Weight in pounds.

   (3) PCB Wastes: Weight in pounds.

   (4) Other regulated wastes (e.g., lead-based paint or asbestos): Weight in pounds (specify type of waste in report).

SECTION 13.9--CONTRACTOR'S LIABILITY FOR REGULATED MATERIAL INCIDENTS

1. GENERAL: The Contractor is solely liable for all expenses related to spills, mishandling, or incidents of regulated material attributable to his actions or the actions of his subcontractors. This includes all response, investigation, cleanup, disposal, permitting, reporting, and requirements from applicable environmental regulation agencies.

2. SUPERVISION: The actions of the Contractor employees, agents, and subcontractors shall be properly managed at all times on Western property or while transporting Western's (or previously owned by Western) regulated material and equipment.

SECTION 13.10--POLLUTANT SPILL PREVENTION, NOTIFICATION, AND CLEANUP

1. GENERAL: Provide measures to prevent spills of pollutants and respond appropriately if a spill occurs. A pollutant includes any hazardous or non-hazardous substance that when spilled, will contaminate soil, surface water, or ground water. This includes any solvent, fuel, oil, paint, pesticide, engine coolants, and similar substances.

2. SPILL PREVENTION NOTIFICATION AND CLEANUP PLAN (Plan): Provide the Plan to the COR for review and comment 14 days prior to start of work. Review of the plan is for the purpose of determining compliance with the specifications only and shall not relieve the Contractor of the responsibility for compliance with all Federal, State, and Local regulations. Include the following in the Plan:

   (1) Spill Prevention measures. Describe the work practices or precautions that will be used at the job site to prevent spills. These may include engineered or manufactured techniques such as installation of berms around fuel and oil tanks; Storage of fuels, paints, and other substances in spill proof containers; and management techniques such as requiring workers to handle material in certain ways.

   (2) Notification. Most States and the Environmental Protection Agency require by regulation, that anyone who spills certain types of pollutants in certain quantities notify them of the spill within a specific time period. Some of these agencies require written follow up reports and cleanup

reports. Include in the Plan, the types of spills for which notification would be made, the agencies notified, the information the agency requires during the notification, and the telephone numbers for notification.

(3) Employee Awareness Training. Describe employee awareness training procedures that will be implemented to ensure personnel are knowledgeable about the contents of the Plan and the need for notification.

(4) Commitment of Manpower, Equipment and Material. Identify the arrangements made to respond to spills, including the commitment of manpower, equipment and material.

(5) If applicable, address all requirements of 40CFR112 pertaining to Spill Prevention, Control and Countermeasures Plans.

3. TANKER OIL SPILL PREVENTION AND RESPONSE PLAN: Provide a Tanker Oil Spill Prevention and Response Plan as required by the Department of Transportation if oil tankers with volume of 3,500 gallons or more are used as part of the project. Submit the Tanker Oil Spill Prevention and Response Plan to the COR for review and comment 14 days prior to start of work. Review of the plan is for the purpose of determining compliance with the specifications only and shall not relieve the Contractor of the responsibility for compliance with all Federal, State, and Local regulations.

SECTION 13.11--PESTICIDES

1. GENERAL: The term “pesticide” includes herbicides, insecticides, rodenticides and fungicides. Pesticides shall only be used in accordance with their labeling and applied by appropriately certified applicators.

2. ENVIRONMENTAL PROTECTION AGENCY REGISTRATION: Use EPA registered pesticides that are approved for the intended use.

3. PESTICIDE USE PLAN: Provide a pesticide use plan that contains: 1) a description of the pesticide to be used, 2) where it is to be applied, 3) the application rate, 4) a copy of the label, and 5) a copy of required applicator certifications. Submit the pesticide use plan to the COR for review and comment 14 days prior to the date of intended application. Review of the plan is for the purpose of determining compliance with the specifications only and shall not relieve the Contractor of the responsibility for compliance with all Federal, State, and Local regulations. Within seven days after application, submit a written final report to the COR, including the pesticide applicators report, in accordance with Standard 2 – Sitework, Section 2.1.1_5. “Soil-Applied Herbicide, (4) Final Report”.

SECTION 13.12--TREATED WOOD UTILITY POLES AND CROSSARMS RECYCLING OR DISPOSAL

Whenever practicable, treated wood utility poles and crossarms removed during the project shall be recycled or transferred to the public for some uses. Treated wood utility poles and crossarms transferred to a recycler, landfill, or the public shall be accompanied by a written consumer information sheet for treated wood as provided by Western. Obtain a receipt, part of the consumer information sheet, from the recipient indicating that they have received, read, and understand the consumer information sheet. Treated wood products transferred to right-of-way landowners shall be moved off the right-of-way. Treated wood product scrap, poles, and crossarms that cannot be donated or reused shall be properly disposed in a landfill that accepts treated wood and has signed Western’s consumer information sheet receipt. Submit treated wood utility poles and crossarms consumer information receipts to the COR prior to submittal of final invoice.

STANDARD 13 - ENVIRONMENTAL QUALITY PROTECTION

SECTION 13.13--PREVENTION OF AIR POLLUTION

1. GENERAL: Ensure that construction activities and the operation of equipment are undertaken to reduce the emission of air pollutants. Submit a copy of permits for construction activities, if required (e.g., "non-attainment" areas, state implementation plans, or Class I air-sheds), from Federal, State, or local agencies to the COR 14 days prior to the start of work.

2. MACHINERY AIR EMISSIONS: The Contractor and subcontractor machinery shall have, and shall use the air emissions control devices required by Federal, State or Local Regulation or ordinance.

3. DUST ABATEMENT: Dust shall be controlled. Oil shall not be used as a dust suppressant. Dust suppressants shall be approved by the COR prior to use.

SECTION 13.14--HANDLING AND MANAGEMENT OF ASBESTOS CONTAINING MATERIAL

1. GENERAL: Obtain the appropriate Federal, State, Tribal or local licenses or certifications prior to disturbing any regulated asbestos-containing material. If a building or portion of a building will be demolished or renovated, obtain an Asbestos Notice of and Permit for Demolition and Renovation from the State or Tribal Department of Environmental Quality, Division of Air Quality (or equivalent). The building(s) shall be inspected by a State-Certified or Tribal accepted Asbestos Building Inspector. The inspector shall certify the presence and condition of asbestos, or non-presence of asbestos, on site as directed on the State or Tribal Demolition and Renovation Notice/Permit. The inspections shall be performed and notifications shall be submitted whether asbestos is present or not. Submit a copy of licenses, certifications, Demolition and Renovation Notifications and Permits for asbestos work to the COR 14 days prior to work. Ensure: 1) worker and public safety requirements are fully implemented and 2) proper handling, transportation, and disposal of asbestos containing material.

2. TRANSPORTATION OF ASBESTOS WASTE: Comply with Department of Transportation, Environmental Protection Agency, and State and Local requirements when transporting asbestos wastes.

3. CERTIFICATES OF DISPOSAL AND RECEIPTS: Obtain certificates of disposal for waste if the waste is a hazardous waste or receipts if the waste is a non-hazardous waste. Submit copies to the COR prior to submittal of final invoice.

SECTION 13.15--MATERIAL WITH LEAD-BASED PAINT

1. GENERAL: Comply with all applicable Federal, State and local regulations concerning work with lead-based paint, disposal of material painted with lead-based paint, and management of these materials. OSHA and General Industry Standards apply to worker safety and right-to-know issues. Federal EPA and State agencies regulate waste disposal and air quality issues.

2. TRANSFER OF PROPERTY: If lead-based paint containing equipment or material is to be given away or sold for reuse, scrap, or reclaiming, the contractor shall provide a written notice to the recipient of the material stating that the material contains lead-based paint and the Hazardous Waste regulations may apply to the waste or the paint in some circumstances. The new owner must also be notified that they may be responsible for compliance with OSHA requirements if the material is to be cut, sanded, abraded, or stripped of paint. Submit a copy of lead paint notices with contractor and recipient signatures to the COR prior to submittal of final invoice.

3. CERTIFICATES OF DISPOSAL AND RECEIPTS: Obtain certificates of disposal for waste if the waste is a hazardous waste or receipts if the waste is a non-hazardous waste. Submit copies to the COR prior to submittal of final invoice.

STANDARD 13 - ENVIRONMENTAL QUALITY PROTECTION

SECTION 13.16--PREVENTION OF WATER POLLUTION

1. GENERAL: Ensure that surface and ground water is protected from pollution caused by construction activities and comply with applicable regulations and requirements. Ensure that streams, waterways and other courses are not obstructed or impaired unless the appropriate Federal, State or local permits have been obtained.

2. PERMITS: Ensure that:

   (1) A National Pollutant Discharge Elimination System (NPDES) permit is obtained from the US Environmental Protection Agency or State as appropriate if the disturbed construction area equals 1 acre or more. Disturbed areas include staging, parking, fueling, stockpiling, and any other construction related activities. Refer to www.epa.gov/npdes/stormwater for directions and forms.

   (2) A dewatering permit is obtained from the appropriate agency if required for construction dewatering activities.

   (3) Copies of permits and plans, approved by the appropriate regulating agencies, are submitted to the COR 14 days prior to start of work.

3. EXCAVATED MATERIAL AND OTHER CONTAMINANT SOURCES: Control runoff from excavated areas and piles of excavated material, construction material or wastes (to include truck washing and concrete wastes), and chemical products such as oil, grease, solvents, fuels, pesticides, and pole treatment compounds. Excavated material or other construction material shall not be stockpiled or deposited near or on streambanks, lake shorelines, ditches, irrigation canals, or other areas where run-off could impact the environment.

4. MANAGEMENT OF WASTE CONCRETE OR WASHING OF CONCRETE TRUCKS: Do not permit the washing of concrete trucks or disposal of excess concrete in any ditch, canal, stream, or other surface water. Concrete wastes shall be disposed in accordance with all Federal, State, and local regulations. Concrete wastes shall not be disposed of on any Western property, right-of-way, or easement; or on any streets, roads, or property without the owner's consent.

5. STREAM CROSSINGS: Crossing of any stream or other waterway shall be done in compliance with Federal, State, and local regulations. Crossing of some waterways may be prohibited by landowners, Federal or State agencies or require permits.

SECTION 13.17--TESTING, DRAINING, REMOVAL, AND DISPOSAL OF OIL-FILLED ELECTRICAL EQUIPMENT

1. SAMPLING AND TESTING OF INSULATING OIL FOR PCB CONTENT: Sample and analyze the oil of electrical equipment (which includes storage tanks) for PCB's. Use analytical methods approved by EPA and applicable State regulations. Decontaminate sampling equipment according to documented good laboratory practices (these can be contractor developed or EPA standards). Use only laboratories approved by Western. The COR will furnish a list of approved laboratories.

2. PCB TEST REPORT: Provide PCB test reports that contain the information below for disposing of oil-filled electrical equipment. Submit the PCB test report prior to draining, removal, or disposal of oil or oil-filled equipment that is designated for disposal.

   - Name and address of the laboratory
   - Description of the electrical equipment (e.g. transformer, breaker)

- Serial number for the electrical equipment.
- Date sampled
- Date tested
- PCB contents in parts per million (ppm)
- Unique identification number of container into which the oil was drained (i.e., number of drum, tank, tanker, etc.)

3. OIL CONTAINING PCB: Comply with the Federal regulations pertaining to PCBs found at Title 40, Part 761 of the U.S. Code of Federal Regulations (40 CFR 761).

4. REMOVAL AND DISPOSAL OF INSULATING OIL AND OIL-FILLED ELECTRICAL EQUIPMENT: Once the PCB content of the oil has been identified from laboratory results, the oil shall be transported and disposed, recycled, or reprocessed according to 40 CFR 761 (if applicable), Resource Conservation and Recovery Act (RCRA) "used oil", and other applicable regulations. Used oil may be transported only by EPA-registered used oil transporters. The oil must be stored in containers that are labeled "Used Oil." Use only transporters and disposal sites approved by Western.

5. OIL AND OIL-FILLED ELECTRICAL EQUIPMENT RECEIPT: Obtain and submit a receipt for oil and oil-filled equipment transported and disposed, recycled, or reprocessed to the COR prior to submittal of final invoice.

SECTION 13.18--REMOVAL OF OIL-CONTAMINATED MATERIAL

1. GENERAL: Removing oil-contaminated material includes excavating, stockpiling, testing, transporting, cleaning, and disposing of these material. Personnel working with PCBs shall be trained in accordance with OSHA requirements. Submit employee training documentation records to the COR 14 days prior to the start of work.

2. CLEANUP WORK MANAGEMENT PLAN: Provide a Cleanup Work Management Plan that has been approved by applicable Federal, State, or Local environmental regulation agencies. Submit the plan to the COR for review and comment 14 days prior to the start of work. Review of the plan is for the purpose of determining compliance with the specifications only and shall not relieve the Contractor of the responsibility for compliance with all Federal, State, and Local regulations. The plan shall address on-site excavation of contaminated soil and debris and include the following:

   - Identification of contaminants and areas to be excavated
   - Method of excavation
   - Level of personnel/subcontractor training
   - Safety and health provisions
   - Sampling requirements including quality control, laboratory to be used
   - Management of excavated soils and debris
   - Disposal methods, including transportation to disposal

3. EXCAVATION AND CLEANUP: Comply with the requirements of Title 40, Part 761 of the U.S. Code of Federal Regulations (40 CFR 761).

4. TEMPORARY STOCKPILING: Excavated material, stockpiled on site during construction, shall be stored on heavy plastic and covered to prevent wind and rain erosion at a location designated by the COR.

5. SAMPLING AND TESTING: Sample contaminated debris and areas of excavation to ensure that contamination is removed. Use personnel with experience in sampling and, in particular, with

experience in PCB cleanup if PCBs are involved. Use analytical methods approved by EPA and applicable State regulations.

6. TRANSPORTATION AND DISPOSAL OF CONTAMINATED MATERIAL: The Contractor shall be responsible and liable for the proper loading, transportation, and disposal of contaminated material according to Federal, State, and local requirements. Use only transporters and disposal sites approved by Western.

7. POST CLEANUP REPORT: Provide a Post-Cleanup Report that describes the cleanup of contaminated soils and debris. Submit the report to the COR prior to submittal of final invoice. The report shall contain the following information:

   - Site map showing the areas cleaned
   - Description of the operations involved in excavating, storing, sampling, and testing, and disposal
   - Sampling and analysis results including 1) Name and address of the laboratory, 2) sample locations, 3) sample dates, 4) analysis dates, 5) contents of contaminant (e.g. PCB or total petroleum hydrocarbons) in parts per million (ppm)
   - Certification by the Contractor that the cleanup requirements were met
   - Copies of any manifests, bills of lading, and disposal certificates
   - Copies of correspondence with regulatory agencies that support completion of the cleanup

SECTION 13.19—CONSERVATION OF NATURAL RESOURCES

1. GENERAL: Federal law prohibits the “take” of endangered, threatened, proposed or candidate wildlife and plants, and destruction or adverse modification of designated Critical Habitat. Federal law also prohibits the “take” of birds protected by the Migratory Bird Treaty Act, and the Bald and Golden Eagle Protection Act. “Take” means to pursue, hunt, shoot, wound, kill, trap, capture or collect a protected animal or any part thereof, or attempt to do any of those things without a permit from U.S. Fish and Wildlife Service. The Contractor will take precautions to avoid harming other wildlife species. Contractor shall restrict all ground disturbing activities to areas that have been surveyed by Western for natural resources and as specified in accordance with Standard 1 – General Requirements, Sections 1.3.1 Rights-of-way and 1.3.2 Access to the Work and Haul Routes.

2. KNOWN OCCURRENCE OF PROTECTED SPECIES OR HABITAT: Following issuance of the notice to proceed, and prior to the start of construction, Western will provide training to all contractor and subcontractor personnel and others involved in the construction activity if there is a known occurrence of protected species or habitat in the construction area. Untrained personnel shall not be allowed in the construction area. Western will provide drawings or maps showing sensitive areas located on or immediately adjacent to the transmission line right-of-way and/or facility. These sensitive areas shall be considered avoidance areas. Prior to any construction activity, the avoidance areas shall be marked on the ground by Western. If access is absolutely necessary, the contractor shall first obtain written permission from the COR, noting that a Western and/or other Federal or state government or tribal agency biologist may be required to accompany personnel and equipment. Ground markings shall be maintained through the duration of the contract. Western will remove the markings during or following final inspection of the project.

3. UNKNOWN OCCURRENCE OF PROTECTED SPECIES OR HABITAT: If evidence of a protected species is found in the project area, the contractor shall immediately notify the COR and provide the location and nature of the findings. The contractor shall stop all activity within 200 feet of the protected species or habitat and not proceed until directed to do so by the COR.

Western
AREA POWER
ADMINISTRATION

CONSTRUCTION STANDARDS

STANDARD 14
COMMUNICATION FACILITIES

July 2009

SAFETY
A HABIT TO LIVE BY

STANDARD 14 - COMMUNICATION FACILITIES

TABLE OF CONTENTS

Page Number

SECTION 14.1 --COMMUNICATION TOWER OR MONOPOLE 5
14.1.1 GENERAL 5
1. General 5
2. Requirements 5
14.1.2 CONTRACTOR-FURNISHED DRAWINGS AND DATA 5
1. General 5
2. Changes 5
3. Approval Time 5
4. Units of Measurement 5
5. Design Calculations and Data 5
6. Approval Drawings 6
7. Final Approval Drawings 7
8. Final As-Built Drawings 7
9. Distribution of Drawings and Data 7
14.1.3 DESIGN REQUIREMENTS 7
1. Design Loadings 7
2. Structural Analysis and Design 7
3. Components 8
4. Details of Design 8
14.1.4 MATERIAL 11
1. Structural Steel 11
2. Standard-Strength Steel 11
3. Structural Steel Pipe 11
4. High-Strength Steel 12
5. Bolts And Nuts 12
6. Washers 12
7. Locknuts 12
8. Arc-Welding Electrodes 12
9. Zinc Dust-Zinc Oxide Paint 12
10. Grating 12
11. Guy Wires 12
12. Guy Hardware, Steel Guy Anchor Shaft, and Attachments 12
13. Guy Wire Sleeves 12
14. Galvanizing and Dulling 12
14.1.5 QUALITY CONTROL, FABRICATION AND WELDING 12
14.1.6 ERECTION 12
1. General 12
2. Anchor Bolts and Embedded Material 12
3. Base Plates 12
4. Structural Steel 13
5. Guyed Towers 13
6. Erecting Tower 13
7. Bolting 13

SECTION 14.2 FOUNDATIONS 14
14.2.1 GENERAL 14
14.2.2 GUY ANCHORS 14

SECTION 14.3 WAVEGUIDE BRIDGE, SUPPORTS, AND ENTRY PANELS 14
14.3.1 WAVEGUIDE BRIDGE AND SUPPORTS 14
1. General 14

2. Waveguide Bridge 15
3. Waveguide Bridge Supports 15
14.3.2 WAVEGUIDE ENTRY PANEL INTO SERVICE BUILDING 15
1. Installation 15

SECTION 14.4 TOWER LIGHTING 15
14.4.1 GENERAL 15
14.4.2 SUBMITTALS 16
1. Shop Manuals 16
2. Approval Data 16
14.4.3 MATERIAL 16
1. Strobe Beacon and Controller 16
2. Power Cable 16
14.4.4 INSTALLATION 16
1. Strobe Beacons 16
14.4.5 ACCESSORIES 16

SECTION 14.5 GROUNDING SYSTEM 16
14.5.1 GENERAL 16
14.5.2 TOWER, WAVEGUIDE SUPPORT, FUEL TANK, AND BUILDING GROUNDING 16
1. Grounding Cable 16
2. Grounding Rings 16
3. Grounding Cable Connections 16
4. Grounding Rods 16
5. Damage to Existing Ground Cable 17
14.5.3 GROUNDING SYSTEM TESTING 17

SECTION 14.6 ANTENNA SYSTEM 17
14.6.1 GENERAL 17
1. Operating Environment 17
2. Power 17
3. Service 17
14.6.2 ANTENNAS AND MOUNTS 18
1. Antennas 18
2. Antenna Mounting 18
14.6.3 TRANSMISSION LINES 18
1. Waveguide 18
2. Coaxial Cable 18
3. Hardware and Installation 18
4. Transmission Line Grounding 19
5. Testing 19
6. Pressurization Equipment 19
7. Installation, Turn-Up, and Test 20

SECTION 14.7 TOWER INSPECTION AND MAINTENANCE 21
14.7.1 GENERAL 21
1. Inspection and Routine Maintenance. 21
2. Non-Routine Miscellaneous Mainteance 21
3. Reports 21
14.7.2 INSPECTION AND MAINTENANCE WORK REQUIREMENTS 21
1. Foundations and Anchors 21
2. Tower 22
3. Guy Wires 22
4. Antenna Systems 22
5. Electrical 23
6. Lightning Protection Systems 23

7. Grounding 23
8. Tower Photographs and Inventory Form 23
14.7.3 INSPECTION AND MAINTENANCE PERFORMANCE 24
1. General 24
2. Standard 24

SECTION 14.1 COMMUNICATION TOWER OR MONOPOLE

14.1.1 GENERAL:

1. GENERAL: Tower or Monopole shall be designed and furnished by a company regularly engaged in the manufacture of communication facilities.

2. REQUIREMENTS: Bolts, nuts, locknuts, antenna pipe mounts, climbing ladders including a safety climbing system, waveguide ladders, work platforms, rest platforms, embedded material, and other appurtenances including all associated hardware shall be considered as part of the communication tower or monopole.

14.1.2 CONTRACTOR-FURNISHED DRAWINGS AND DATA:

1. GENERAL: Before beginning fabrication of the material, furnish drawings and data for the communication tower or monopole. Prior to shipment of material, furnish "Final Approval Drawings" for the communication tower or monopole. Before final payment is made, furnish "Final As-built Drawings" for the communication tower or monopole. Refer to the contract clause titled "Specifications and Drawings for Construction" for additional requirements, except that shop detail drawings may be considered proprietary data as outlined in 14.1.2.6 below.

2. CHANGES: Make all changes in Contractor-furnished drawings, designs, and construction details which Western determines necessary to make the finished construction conform to these specifications. Revise the drawings to reflect all changes.

3. APPROVAL TIME: Time allowed for approval of drawings and data submitted to Western for approval is specified in Division 1 Specific Requirements paragraph "Commencement, Prosecution, and Completion of Work" paragraph of the "General Requirements" Division. The reproducible of each drawing and one set of data sheets will be returned to the Contractor marked to indicate required changes, if any, and whether the drawings or data are approved or not approved. Western's approval shall not relieve the Contractor from meeting the specifications requirements nor the responsibility for design and drawing correctness.

4. UNITS OF MEASUREMENT: Units of measurement shall be in United States Standard units; and all wording, signs, symbols, and other designations shall be in English.

5. DESIGN CALCULATIONS AND DATA: Submit for approval one copy of the following design calculations and data for the communication tower or monopole:

   (1) General dimensions and weight.

   (2) Hand calculations of dead and live loads for all loading cases and points of application of all loads.

   (3) Member loads for each loading case and the capacity needed for and furnished by each member; ground line shears and axial loads; and all other design data required for the foundation design. Accuracy and correctness of the design is the sole responsibility of the Contractor.

   (4) Maximum deflection for all loading cases.

   (5) Maximum twist and sway at all initial and future antenna attachment points.

   (6) Size, description, and quantity of bolts at each connection.

   (7) Orientation referenced to true north.

(8) Computer analysis with complete description of the computer program used.

(9) Antenna and side strut layouts.

(10) Data certifying that the manufacturer has:

1) Successfully designed and manufactured similar items of comparable magnitude and purpose to those to be furnished under these specifications for a period of not less than 3 years.

2) Manufacturing facilities adequate for manufacturing the type and size of tower or monopole to be furnished under these specifications.

6. APPROVAL DRAWINGS: Submit two 11-inch x 17-inch or 8 1/2-inch x 11-inch prints of the following:

(1) Shop Detail Drawings:

1) Drawings: Shop detail drawings of all members, including climbing and waveguide ladders, safety-climbing device, work and rest platforms, pipe mounts, other appurtenances, and connections. Shop detail drawings may be stamped "Proprietary Data" and will be used only for repair, modification, or replacement of communication material provided under these specifications.

2) Proprietary Data: Shop detail drawings that the manufacturer considers proprietary data will only be used as specified in subparagraph 1) above. Proprietary data will not be disclosed for any reason, including disclosure under the Freedom of Information Act, without prior written approval from the manufacturer.

(2) Erection drawings for each type and height of structure showing the following:

1) Marking and position of each member and, for each bolted joint, the number and size of bolts and the number and size of any ring fills.

(3) Complete bill of materials, listing all material for the tower or monopole or the portion shown there on, including bolts. The bill of materials shall show the number of pieces required; the description of each piece, including size and length; the mark number of each piece; the weight of each piece; and the drawing number on which the shop detail of each piece can be found. The total weight shall be noted on the drawing.

(4) Mounting details of antennas and reflectors.

(5) Guys:

1) Guy pretension.
2) Guy location, attachment details and all hardware information.
3) Guy anchor and installation details.
4) Guy azimuth.

(6) Both the shop detail drawings and erection drawings shall show the following information:

1) Controlling dimensions of each structure.
2) Western specifications number, bid item number, and revision dates.
3) Western job title.
4) Type of material and finish.
5) Name of site.
6) Changes or revisions and revision date.

Check drawings for accuracy and completeness before being submitted. Western will not thoroughly check details and intermediate dimensions.

7. FINAL APPROVAL DRAWINGS: Prior to shipment of material, furnish reproductions of all drawings listed in 14.1.2.6 above. The drawings shall show all changes and revisions, with revision dates, made up to the time the material is ready for shipment.

8. FINAL AS-BUILT DRAWINGS: Before final payment is made under the contract, deliver to Western the original or photo mylars of all drawings listed in 14.1.2.6 above, with all revisions found necessary to correct errors or reflect changes discovered during field erection.

9. DISTRIBUTION OF DRAWINGS AND DATA:

   (1) Design Calculations, Data, and Approval Drawings: Send to Western Area Power Administration to the Civil Engineer, and a copy of the transmittal letter to the COR.

   (2) Final Approval Drawings: Send to Western Area Power Administration to the Civil Engineer, and a copy of the transmittal letter to the COR.

   (3) Final As-Built Drawings: Send to Western Area Power Administration to the Civil Engineer.

14.1.3 DESIGN REQUIREMENTS:

1. DESIGN LOADINGS: Design to be reliable, serviceable, and to resist, without permanent distortion or excess sway and twist, all loading conditions and those loads required for manufacturing, handling, transporting, and installing. For the loading and twist and sway analysis, parabolic antennas shall be treated as solid antennas without radomes. All tower members shall be sized for wind loads acting both perpendicular to the tower face and to the apex of two faces. The azimuths of future antennas that produce the worst case conditions shall be used.

2. STRUCTURAL ANALYSIS AND DESIGN:

   (1) General: Design to withstand the maximum of all loads, specified in 14.1.3.1 above, without exceeding the allowable unit stresses in members. Design in accordance with the basic assumptions and the latest requirements of the following:

      1) TIA-222-G, "Structural Standards for Steel Antenna Towers and Antenna Supporting Structures".

      2) EIA-195-C, "Electrical and Mechanical Characteristics for Terrestrial Microwave Relay System Antennas and Passive Reflectors".

      3) Andrew Bulletin No.1015F.

      4) AISC "Manual of Steel Construction, Ninth Edition (Part 5, Specifications and Codes)".

      5) ASCE Standard 10, "Design of Lattice Steel Transmission Structures".

      6) ASCE "Manual 72 - Design of Steel Transmission Pole Structures- Second Edition".

      7) AISI "Specifications for the Design of Cold-Formed Structural Members".

      In the event of conflicting requirements in these standards, the more stringent shall apply.

(2) Criteria: Design based on an analysis of stress and combination of stresses due to moment, shear, torsion, guys, and axial loads.

(3) Twist and Sway: Twist and sway, as defined in TIA-222-G, shall not exceed plus or minus 0.5 degree at the antenna attaching points with the loading in 14.1.3.1 above. In addition the tower shall not exceed the combined twist and sway requirement of 0.5 degrees under the full design wind speed loading in 14.1.3.1 above. Torsion stabilizers shall be provided as necessary for guyed towers.

(4) Designer's Qualifications: Design and drawings shall be supervised and certified by a registered Professional Engineer competent in structural analysis and communication facilities design. The designer shall also check and certify the shop detail and erection drawings.

(5) Shielding: Shielding will not be allowed on antennas, ladders, and waveguides.

3. COMPONENTS: Components shall meet the following minimum thickness requirements:

(1) Main Leg Members: 1/4 inch for rolled shapes; 3/16 inch for round, square, and rectangular tubes.

(2) Compression Members with Calculated Stress: 3/16 inch for rolled shapes; 1/8 inch for round, square, and rectangular tubes.

(3) Members with No Calculated Stress: 1/8 inch.

(4) Connection Bolts: Connection bolts shall not be less than 1/2 inch in diameter.

(5) Monopole: The monopole cross section may be circular or a regular polygon having not more than 12 sides.

4. DETAILS OF DESIGN:

(1) Self-Supporting Towers: Self-supporting towers shall be three-or four-legged towers with horizontal members at not more than 20-foot intervals on each tower face. Tower face width shall not be less than 56 inches between connection bolts. All load carrying members that are bolted should have a minimum of two bolts for each connection. Legs and diagonal bracing shall be angles or tubular. Ends of diagonal tube bracing shall be left open. Horizontal bracing shall be angle. Cover top of tube legs and provide a 1/2-inch-minimum-diameter drain hole at the base of each leg.

(2) Guyed Towers:

1) General: Guyed towers shall be triangular and have a minimum face width of 56 inches between connection bolts and shall be limited to bolted angular construction. Provide horizontal members at 4-foot maximum intervals on each face of the tower. The shaft of guyed towers shall be supported on a pivot mount to prevent bending forces from being transmitted to the foundation. Determine the number, size, and location of all guys and anchors required for the guyed towers. Guy anchors shall be at least 10 feet inside property lines. Prior to final tensioning, provide to the COR, data including tensioning procedures, sequences, and temperature corrections for initial tension values of all guy wire sizes. The temperature range of the guy chart shall be from 0° to 100°F in 10° increments.

2) Guy Design: Determine the guy size, location and arrangement best suited for each tower. Locate guys to provide minimum tower twist and sway. Guys shall have a minimum 3/8-inch diameter.

3) Structural Analysis and Design: Guys shall be treated as elastic members in the structural analysis of the towers. The modules of elasticity for guy material shall be taken as 23,000 ksi. Loads in the guys shall not exceed 60 percent of the minimum rated breaking strength of the guys.

   Guy tensions under conditions of no wind, no ice, and 90°F temperature shall be a minimum of 10 percent of the minimum rated breaking strength of the guy. Determine the tensions required under the wind and temperature conditions at the time of guy tensioning in order to meet this requirement.

4) Guy Hardware and Attachments: Guy hardware and attachments shall be capable of supporting the minimum rated breaking strength of the guys. Turnbuckles shall be used on the guy anchor plate end for cable adjustment. The turnbuckles shall have a working load that is 50 percent of the minimum rated breaking strength of the attached guy. Each guy shall be attached to the guy anchor plate in a separate hole. Provide two working holes in each guy anchor plate.

5) Guy Cable Markers: Provide high visibility guy cable markers at all locations where guy cables enter the ground. Guy cable markers shall extend a minimum of 10 feet up the guy cable.

(3) Pipe Mounts for Antennas: Provide standard 4 1/2 inch-outside-diameter, Schedule 80 pipe mounts, 60 inches long, for the attachment of the parabolic microwave antennas for the initial antennas and future antennas with azimuth assignments. Pipe mounts shall be designed and installed for the plumb position. Provide two 4 x 4 x 1/4 minimum side strut attachment angles for each parabolic microwave antenna. Connect side strut attachment angles to the legs with a minimum of two U-bolts. The angles shall have one leg down and the other leg out of the tower face for climbing purposes. Connection of the side strut mounting hardware shall be made to these separate angular members. Connecting the side struts directly to tower members will not be permitted. No side strut shall go through the face of a tower unless authorized by Western. All side strut pipes shall be installed within a plus or minus 30 degree angular limitation. Provide standard 2 7/8 inch-outside-diameter, Schedule 80 pipe mounts, 60 inches long, for the attachment of the VHF/UHF antennas for the initial and future antennas.

   The limit of movement of antenna pipe mounts shall not exceed plus or minus 0.1 degree for all antennas.

(4) Waveguide Ladder: Waveguide ladders shall be designed such that the maximum vertical spacing between cable attachment points is 4 feet. Use of tower legs or diagonals with beam clamps is not acceptable.

   Waveguide ladder cross-members shall be drilled to accept and support a minimum of eight elliptical waveguide hangers in a horizontal line at each attachment point. Unless otherwise approved, the holes shall be spaced at 4 inches on center.

(5) Waveguide Attachments: Drill holes at a vertical spacing of 4 feet to accept the 3/8-inch, stainless-steel threaded rods for waveguide hangers.

(6) Climbing Ladder: Provide an inside-mounted climbing ladder for the full height of the tower. Provide a face-mounted climbing ladder for the full height of the monopole complete with work rungs located 4 feet below and handholds located at the centerline of each parabolic antenna. The ladder shall be mounted as close to the building as possible and oriented so that the climber faces the building. Ladder, work rungs, and handholds, shall be designed to support a minimum of the current OSHA load and impact requirements. Ladder shall have round 3/4-inch diameter solid steps spaced at 12 inches center to center. Steps shall be corrugated, knurled, or dimpled to minimize slipping. Coating with skid-resistant material is not acceptable. Spacing of side rails

shall be 16-inch clear width. Provide a minimum of 7 inches clearance on the back side of the ladder between any structural member or appurtenance. Ladder shall be stabilized at the bottom end by means of a concrete foundation, unless on a guyed tower. The ladder shall be vertical, or can slope away from the climber as the climber ascends the ladder. On three-legged towers the ladder shall be corner mounted in the tower's apex. Ladder sections shall be spliced together to form a continuous ladder and be bolted to the tower every 5 feet. If no tower members are available to attach to every 5 feet then an additional support frame shall be provided, which is based on the unsupported distance between horizontal tower members. The ladder shall be attached every 5 feet to this ladder support frame and the frame attached to the horizontal tower members. The design for this shall be submitted with the tower design. Ladder side rails shall be made of flat plate and be a minimum size of 2 1/2 inches x 3/16 inch. For waveguide ladders attached to the climbing ladder, place holes for waveguide runs in the center of the side rail, midway between the ladder rungs. Ladder supports shall not protrude beyond the face of the ladder.

(7) Safety Climbing Device: Provide on the climbing ladder a fall prevention device consisting of a single; center-mounted 3/8 inch steel tensioned cable, running the entire length of the ladder. The device shall be designed to support the minimum of the current OSHA load and impact requirements. The device shall be securely fastened at the top and bottom of the ladder and at intervals in between using the appropriate cable retainers, per the manufacturer's instructions. The device shall allow at least two climbers to utilize the system at the same time. Provide three safety sleeves or sliders that are detachable from the cable and have an anti-fall instant gripping locking mechanism. The sleeves shall be designed so that they cannot be installed on the cable incorrectly or upside down. The sleeves shall automatically travel around or through the cable attachments and guides. An acceptable safety device is the Vi-Go Climbing System, manufactured by Miller (Sperian) Fall Protection, or an approved equivalent. Rail or tube-type systems are not acceptable.

(8) Work Platforms: The platform shall encompass the entire interior area of the tower. Work platforms shall have a trap door providing a minimum 28-inch x 28-inch clear opening. The trap door shall be equipped with a securing device that locks automatically when the trap door is opened completely. This device shall ensure that the door remains in the open position and prevents it from being slammed shut accidentally by wind, personnel, or equipment. This device shall be easy to unlatch when the trap door is to be closed. The trap door shall be constructed such that it is easy for one person to open with one hand. Each work platform shall consist of a level welded rectangular steel grating inside the tower that will carry at least two people. The minimum safe concentrated load shall be 640 pounds, based on the unsupported span of the grating. In addition the deflection shall be 1/4 –inch or less under a uniform load of 100 pounds per square foot, or 1/2-inch or less under the concentrated loading of 640 pounds. Work platforms shall include handrails and toe boards around the perimeter that meet OSHA requirements.

(9) Rest Platforms: Rest platforms shall be placed at intervals no greater than 100 feet. Each rest platform shall consist of a level welded rectangular steel grating inside the tower that will allow sitting or standing room for at least one person with a minimum width of 15 inches. Work platforms may be used for rest platforms.

(10) Ice Shields: Ice shields shall be large enough to protect the feed horns and radomes. Use the same welded steel rectangular grating as the work and rest platforms.

(11) Passive Repeaters: Self-supporting steel structures shall have mounting units for alignment of reflectors. Each unit shall have maximum adjustment ranges of plus or minus 4 degrees about either axis and plus or minus 2 degrees about both axes simultaneously. The units shall be designed to meet rigidity specifications of EIA-195-C for the required operations.

(12)Connections:

1) General: The length of connection bolts under the head shall be long enough for full thread engagement of a heavy hex nut and either a palnut or MF locknut. Locknuts shall be provided for all bolts. Bolts, nuts, washers, and locknuts required for assembling the material in the field shall be furnished in quantities sufficient to compensate for normal field losses, provided the excess quantities do not exceed 2 percent of the actual requirement. All connections shall be designed to minimize eccentricities. For angle shapes, the bolt holes shall be placed as close to the heel of the angle as possible.

2) Bolt-Hole Spacing: Unless otherwise approved, the minimum spacing from center to center of bolt holes shall be as shown in Table 14-1. Where practical, the spacing shall be not less than three diameters. Wherever possible, the distance from the center of a bolt to the face of the outstanding leg of an angle or other member shall be such as to permit the use of a socket wrench in tightening the bolt.

3) Distance of Bolt Hole to Edge of Piece: Unless otherwise approved, the distance between the edge of any piece and the center of a bolt hole shall not be less than shown in Table 14-1, where applicable.

TABLE 14-1

BOLT HOLE CLEARANCES

Size of bolt (inch)**	Minimum edge distance (inch)		Minimum center to center (inch)
	Rolled or flame-cut*	Sheared	
1/2	3/4	7/8	1 1/4
5/8	7/8	1 1/8	1 1/2
3/4	1	1 1/4	1 7/8

*Where flame-cuts are made by mechanically guided torch.
**1/2-inch bolts can be used on guyed towers only.

In detailing the gaugelines, allowance shall be made for mill tolerances in the width of the legs or flanges to ensure that the specified minimum edge distances will be met.

4) Slip-Critical Connections: Bolts, if any, in slip-critical connections and in other connections requiring full pre-tensioning shall be noted in the design and identified on the erection drawings. Include requirement for providing full pretension on the erection drawings.

14.1.4 MATERIAL:

1. STRUCTURAL STEEL: All structural steel shall be galvanized.

2. STANDARD-STRENGTH STEEL: ASTM A 36.

3. STRUCTURAL STEEL PIPE: ASTM A 53, Grade B, or ASTM A501, Grade A or B.

4. HIGH-STRENGTH STEEL: ASTM A 572, Grade 50. High strength steel plate shall have minimum longitudinal impact strength of 15 foot-pounds at minus 20° F as determined by the Charpy "V" Notch Impact Test in accordance with ASTM A 67.

5. BOLTS AND NUTS: Bolts and nuts shall be galvanized and conform to ASTM A 394, Type 1, or ASTM A 325, Type 1.

6. WASHERS: Beveled washers shall be malleable iron or steel, galvanized. Other washers shall be steel or wrought-iron, galvanized.

7. LOCKNUTS: Square, regular Type MF No.1, or regular palnut locknuts. Locknuts shall be galvanized.

8. ARC-WELDING ELECTRODES: In accordance with the latest edition of AWS "Specifications for Iron and Steel Arc-Welding Electrodes" and suitable for the base material, positions, and other use conditions.

9. ZINC DUST-ZINC OXIDE PAINT: ASTM A 780. Zinc dust-zinc oxide paint shall have a minimum zinc content of 94 percent (dry film weight).

10. GRATING: Welded rectangular steel grating with a minimum 1 1/2-inch x 3/16-inch bearing bar and cross bars at a maximum 4-inch spacing that meets Federal Specification RR-G-661a. End banding bars are required.

11. GUY WIRES: ASTM A 475-89, extra-high-strength grade.

12. GUY HARDWARE, STEEL GUY ANCHOR SHAFT, AND ATTACHMENTS: Guy hardware and attachments shall be of the type and manufacturer's rated strength as specified on the approved shop detail and erection drawings. Steel guy hardware, steel guy anchor shaft, and attachments shall be galvanized.

13. GUY WIRE SLEEVES: Shall be "SiteGuard Guyline Guardians" as manufactured by Honeywell, or approved equal.

14. GALVANIZING AND DULLING: Shall be in accordance with Standards DIVISION 4 “SUBSTATION METALWORK AND TRANSMISSION LINE LATTICE STRUCTURES”.

14.1.5 QUALITY CONTROL, FABRICATION AND WELDING: Shall be in accordance with the latest TIA-222-G and standards DIVISION 4 “SUBSTATION METALWORK AND TRANSMISSION LINE LATTICE STRUCTURES.

14.1.6 ERECTION:

1. GENERAL: Material shall be installed or erected in accordance with the erection drawings and these specifications. Erection and installation shall be in accordance with the applicable provisions of the AISC "Manual of Steel Construction, Ninth Edition (Part 5, Specifications and Codes)". No steel shall be erected on a foundation until 7 days after the last concrete placement in the foundation, nor until backfill has been placed and compacted where and as required.

2. ANCHOR BOLTS AND EMBEDDED MATERIAL: Set accurately to the grade and alignment designated on the approved drawings.

3. BASE PLATES: Set level, in exact position. Leveling shall be done in accordance with the Contractor's approved drawings. Where grout is required, the grout shall be in accordance with the "Grouting Mortar" paragraph of the "Concrete" Division.

4. STRUCTURAL STEEL: Transport and handle to avoid bending or damage to the material and galvanizing. Pieces bent in handling may be used only if they are straightened in a manner approved by the COR.

5. GUYED TOWERS: Guys and anchors shall be installed in the locations shown on the Contractor's approved drawings. Preforms shall be used to terminate the cables. "Haven" type grips with serrate jaws will damage cable and shall not be used to tension guy cable. Guys shall be pre-tensioned as shown on the Contractor's approved drawings. Guys shall be one continuous piece of cable. Splicing of guy cable will not be permitted.

   Turnbuckles shall provide a minimum of 16 inches of take-up and shall have not less than 2 inches of exposed threads inside the buckle body and provide a minimum of 6 inches of take-up after final tensioning. Turnbuckles shall be safetied to prevent movement exceeding one-half turn.

6. ERECTING TOWER: Tower may be erected by assembling in sections on the ground and hoisting successive sections into place or may be built up in place by individual members, at the option of the Contractor. If erected by assembling in sections, initial bolting shall be adequate for dead load, live load, and erection stresses, but shall not be so tight as to prevent aligning and fitting adjacent sections or members.

   A reasonable amount of drifting is allowed. "A reasonable amount of drifting" is defined as drifting without causing hole elongation or deformation of members. Reaming for correction of mismatched holes will not be permitted. If shop errors are discovered, the COR will decide whether the errors may be field-corrected or the members returned to the manufacturer for correction or replacement.

   Repair galvanizing damaged due to drifting, repair operations, or field-drilling in accordance with the "Galvanizing" paragraph of the "Metalwork" Division, and use the zinc dust-zinc oxide paint specified in the "Material" paragraph of this Subdivision.

   Misalignment or misfit of adjacent sections or members attributable to the adopted method of erection shall be corrected by adjusting erection methods as necessary to eliminate trouble.

   Slings or devices used for lifting tower sections or members shall be of such material or shall be protected in such a way as to prevent damaging or overstressing members.

   Erected tower shall have less than 1 inch of twist per 100 feet, and be within 3/4 inch of plumb per 100 feet of tower height.

7. BOLTING:

   (1) General: Bolts shall be torqued and locked within the shortest practicable time after all material has been installed. Connections shall lay flat where they are bolted together. No gaps between butt flanges or connections are acceptable after the bolts are tensioned. Where incomplete bolting is a major contributing factor to damage prior to final acceptance, repair or replace the material, as directed by the COR.

(2) Torquing of Bolts: Connection bolts shall be entered clear to the head. Bolts shall be tightened to a torque as follows:

Bolt Diameter (Inch)	Torque (Pound-Feet)
1/2	35 to 45
5/8	70 to 100
3/4	125 to 165

Bolts larger than 3/4-inch diameter in shear/bearing-type connections shall be tightened to the snug-tight condition. The snug-tight condition is defined as the tightness that exists when all plies in a joint are pulled into firm contact by the full effort of a man using an ordinary spud wrench. Bolts identified on the erection drawing in slip-critical and other connections requiring full pre-tensioning shall be tightened to the torque shown on the drawings.

(3) Locknuts: Type "MF" locknuts shall be tightened sufficiently to flatten its concave face to full contact against the structural nut. Palnut locknuts shall be given one-third turn beyond contact with the structural nut.

(4) Wrenches: Only wrenches approved by the COR shall be used on the work, and the use of any wrench which may deform the nut or cut or flake the galvanizing will not be permitted.

SECTION 14.2 FOUNDATIONS

14.2.1 GENERAL: Design and construct reinforced concrete foundations required for communication tower or monopole, waveguide supports, and climbing ladder. Complete construction of the communication tower or monopole foundations prior to constructing the service building foundation. The concrete shall be in accordance with Division 3 “CONCRETE”. All self-supporting or guyed tower foundations shall be drilled or augured shaft type, stem and pad type, or pad type, suitable for the structure type, loading, and soil conditions. All foundations shall have a vertical depth that extends below frost depth.

14.2.2 GUY ANCHORS: Guy anchors shall be a concrete vertically drilled auger or dead man type. A belled shaft type is not acceptable. Dead man type shall have a concrete collar around the steel shaft from the anchor to 1’-0” above the ground surface to prevent corrosion of the steel. Guy anchors shall develop a minimum of 70 percent of the resultant of the minimum rated breaking strength of all attached guys. The design for the concrete anchor shall have careful consideration given to the uplift shear and moment capacities. Complete and comprehensive calculations shall be provided showing that the concrete guy anchor can reliably carry all design loads. The concrete guy anchor shaft shall be a steel framework embedded in the center auger. This steel guy anchor shaft shall transfer the load from the guy anchor plate to the concrete guy anchor.

SECTION 14.3 WAVEGUIDE BRIDGE, SUPPORTS, AND ENTRY PANELS

14.3.1 WAVEGUIDE BRIDGE AND SUPPORTS:

1. GENERAL: Design, provide, and install waveguide bridge and supports from the communication tower or monopole to the service building. Design for 50 psf ice loading.

   Submit drawings and data outlined in the "Contractor-Furnished Drawings and Data" paragraph of the "Communication Tower or Monopole" Subdivision.

2. WAVEGUIDE BRIDGE: The waveguide bridge shall be of the solid or grated type, to accommodate a minimum of six elliptical waveguides and waveguide hangers. The waveguide bridge shall be installed from the waveguide ladder to the waveguide entry port of the service building along the shortest route possible. At the tower, the waveguide bridge shall terminate at the waveguide ladder with an approximate 45 degree upward angle by means of a vertical hinge splice to accommodate the bending radius of the waveguide. The waveguide bridge shall be self-supporting and not attached to the building. It shall terminate within six inches of the exterior edge of the service building, centered directly above the top edge of the waveguide entry port. The waveguide bridge shall have a minimum of two supports, one near the tower and one near the building. Waveguide bridge shall be supported at maximum intervals of 10 feet and any single change in horizontal direction shall not exceed 45 degrees.

3. WAVEGUIDE BRIDGE SUPPORTS: The waveguide bridge supports shall consist of pipe columns, at the locations shown on the approved Contractor-furnished drawings. The pipe columns shall be an anchor-bolt type.

14.3.2 WAVEGUIDE ENTRY PANEL INTO SERVICE BUILDING:

1. INSTALLATION:

   (1) Opening in Building: An opening shall be cut through the wall to the dimensions required for installation of the waveguide entry panels. Cutting and other operations for the wall opening for the waveguide entry shall be carefully performed. If the wall is made of masonry units install so as not to damage adjacent masonry units. Masonry units which are not required to be removed and which are damaged by the Contractor's operations shall be repaired or replaced as directed by the COR.

   (2) Wood Frame: Construct a wood frame in the wall opening and attach the waveguide entry panels. In new buildings construct the wall opening as shown in the "Rough Carpentry" paragraph of the "Service Building" Division.

   (3) Waveguide Entry Panels: Install waveguide entry panels on the interior and exterior surfaces of the building wall.

   (4) Insulation: Provide un-faced fiberglass batt insulation in all cavities, the full thickness of the wall.

   (5) Waveguide Sealing Caps: Waveguide sealing caps shall be placed on the exterior to weatherproof the entry and on the interior to give the installation a finished look.

   (6) Sealant: Use a sealant approved by the COR on the exterior of the building for weatherproofing the perimeter of the waveguide entry panels.

SECTION 14.4 TOWER LIGHTING

14.4.1 GENERAL: Provide White Obstruction Lighting, 24-hour operation, for the towers, unless otherwise indicated in the specifications.

The lighting systems shall be in accordance with the latest edition of FAA Advisory Circular 70/7460-1 entitled "Obstruction Marking and Lighting". Wiring shall be in accordance with the latest edition of the National Electric Code.

The lighting systems shall include strobe beacons, controllers, mounts, wiring, conduit, junction boxes, and all other accessories required for complete weatherproof enclosed lighting systems.

14.4.2 SUBMITTALS:

1. SHOP MANUALS: Two complete shop manuals shall be submitted to the COR for operation and maintenance procedures, including diagrams, schematics, and a complete parts list with manufacturer's part number and ordering information.

2. APPROVAL DATA: Approval data on the strobe beacons and controllers shall be submitted to the Civil Engineer and the COR.

14.4.3 MATERIAL:

1. STROBE BEACON AND CONTROLLER: Part Number D-1N manufactured by TWR Lighting, Inc., 1630 Elmview, Houston, TX 77080, or approved equal.

2. POWER CABLE: Strobecable manufactured by TWR Lighting, Inc., 1630 Elmview, Houston, TX 77080, or approved equal.

14.4.4 INSTALLATION:

1. STROBE BEACONS: Beacons shall be mounted to provide 360 degree horizontal visibility.

14.4.5 ACCESSORIES: Attach to tower by the manufacturer's approved method.

SECTION 14.5 GROUNDING SYSTEM

14.5.1 GENERAL: Provide a complete grounding system for the communication tower, climbing ladder, waveguide bridge supports, propane fuel tanks, and new communications equipment buildings. Connect the ground system to the existing site ground system as indicated on the drawings.

14.5.2 TOWER, WAVEGUIDE SUPPORT, FUEL TANK, AND BUILDING GROUNDING: The Contractor shall install the site grounding system consisting of ground rods, waveguide bridge support risers, building ground ring, fuel tank ring (where applicable), building risers, and interconnection to any existing station ground systems. Refer to grounding system standard drawings.

1. GROUNDING CABLE: All cable for the waveguide bridge support risers, building ground ring, fuel tank ring, building risers and interconnection to existing ground system will be 4/0 AWG bare copper. All buried grounding cable shall be a minimum of 18” below finished grade. All grounding system cable shall have a minimum bend radius of 8”.

2. GROUNDING RINGS: The grounding rings shall be installed around the perimeter of the building foundations. The grounding ring and associated grounding rods shall be a minimum of 2’ to the outside of the foundation (if allowed by respective foundation locations). Roads, driveways, and other obstructions may dictate the exact location of the grounding rings. Final location of the grounding system will be approved by the COR.

3. GROUNDING CABLE CONNECTIONS: All connections between grounding cable and grounding rods, other segments of grounding cable (i.e. risers, bus bar grounding straps, etc.), and the existing station ground will be made using exothermic welds. See drawing 31 1060, “Substation Standards Grounding Details” for typical connections.

4. GROUNDING RODS: All grounding rods will be 5/8” x 10’ copper (Valmont Part No. B1382 or equal). As a minimum, grounding rods will be located at each building corner outside the foundation perimeter and spaced no more than 20’ apart. For buildings with a length of greater than 20’, additional grounding rods will be installed equidistant from any two grounding rods located at the building corners along the ground ring.

5. DAMAGE TO EXISTING GROUND CABLE: Existing ground cables are shown on the drawings in approximate locations. Use caution in excavating near the existing ground cables. Repair all ground cables damaged during construction as directed by the COR.

14.5.3 LIGHTNING PROTECTION: Provide one lightning rod at the top of the tower or monopole, only if the tower or monopole is the tallest object (tower, tree, building, other structure, etc.) in an area around its base defined by a radius of half the height of the tower or monopole.

1. MATERIAL: The lightning rod shall be a 5/8 inch by 10' galvanized steel rod attached to the top of one of the tower legs or the monopole.

2. INSTALLATION: Install the rod in accordance with the manufacturer's instructions and in a plumb position. When installed on a tower leg, it shall not be installed on the same leg with a current or proposed VHF/UHF mobile antenna also on it.

14.5.4 GROUNDING SYSTEM TESTING: Ground system resistivity and continuity testing will be conducted by qualified Western personnel. Test results and a site report will be provided for each communications facility. Any discontinuity in the grounding system will be the responsibility of the contractor to repair.

SECTION 14.6 ANTENNA SYSTEM

14.6.1 GENERAL:

1. OPERATING ENVIRONMENT: All interior equipment shall operate to the guaranteed specifications over an ambient temperature range of 0ºC to 40ºC with non-condensing humidity of 95% at 40ºC. Storage temperature ranges of -40ºC to +65ºC shall not affect equipment operation.

2. POWER: Pressurization equipment shall operate on 120 VAC power with standby generator backup. The standby generator backup shall be provided by the Site Owner. The generator AC power voltage shall remain within ± 10% and frequency shall remain with ± 3 Hz.

3. SERVICE: The equipment shall be designed for a service lifetime of not less than 15 years.

4. SUBMITTALS: The drawings and data required for these specifications include form, fit, and function data and manuals, instructional material, and other drawings and data needed by Western for installation, operation, and routine maintenance. These drawings and data are included in the term "instruction book". All documents, including typical and contract-specific drawings and data shall be pre-punched and inserted into standard letter-sized 3-ring binders or equivalent binding. All documentation shall be submitted to the Communications Engineer and a copy of the transmittal letter to the COR.

   (1) Review documentation: The contractor shall provide two sets of drawings and instruction books for review and comment with the proposal. The information will be used to verify compliance with the requirements of this solicitation, specification, and resulting contract.

   (2) Final documentation: Complete sets of final instruction books and included drawings shall be shipped with the equipment. This includes one per site, one maintenance, and one engineering office copy.

   (3) The review and final documentation shall include:

      1) Antenna drawings and specifications.

      2) Waveguide/coaxial cable drawings and specifications.

3) Pressurization equipment drawings and specifications.

4) Miscellaneous equipment drawings and specifications.

5) Installation instructions.

6) Operating instructions.

7) Trouble shooting guide.

8) Replacement and replaceable parts list.

14.6.2 ANTENNAS AND MOUNTS:

1. ANTENNAS: All parabolic microwave antennas shall be standard FCC category A rated units with radomes unless otherwise specified. Antennas supplied shall be Andrew P series or equivalent. The antennas shall have a designed operating range of 4400-4940 MHZ for those specified as a 4 GHz antenna and an operating range of 7125-8400 MHz for those specified as a 7 GHz antenna. All antennas for operating in the VHF or UHF frequency bands will be furnished by Western unless otherwise specified.

2. ANTENNA MOUNTING: All parabolic microwave antennas shall be equipped with a minimum of one side strut, and for antennas greater than 8' in diameter, a minimum of two side struts shall be utilized. The Contractor shall furnish miscellaneous material, including antenna mounts, tie-backs, struts, brackets, and other items required for assembling and installing the antennas. All mounting of antennas operating in the VHF or UHF frequency bands will be completed by Western unless otherwise specified.

3. ADJUSTMENT AND ALIGNMENT OF ANTENNAS: Antennas and mounting structures shall be installed in the center of their adjustment range for azimuth and elevation. Final alignment of the antennas will be performed by Western.

14.6.3 COMMUNICATION TRANSMISSION LINES:

1. WAVEGUIDE: Contractor shall supply and install premium elliptical waveguide with an operating range of 4400-4940 MHZ for antennas specified at 4 GHz and an operating range of 7125-8400 MHz for antennas specified at 7 GHz. Andrew EWP43 and EWP77, respective to the operating range specified, or equivalent premium waveguide shall be provided, unless otherwise specified.

2. COAXIAL CABLE: Contractor shall supply and install 1/2 inch foam dielectric 50 ohm coaxial cable with an operating range of 150 - 420 MHZ for antennas specified as operating in the VHF or UHF frequency bands. Andrew LDF4-50A or equivalent coaxial cable shall be provided, unless otherwise specified. Contractor shall supply and install 7/8 inch foam dielectric 50 ohm coaxial cable with an operating range of 820 - 960 MHZ for antennas specified as operating in the High UHF frequency bands. Andrew LDF5-50A or equivalent coaxial cable shall be provided, unless otherwise specified.

3. HARDWARE AND INSTALLATION: Contractor shall supply and install all necessary transmission line installation hardware and accessories, including without limitation waveguide connectors, pressure windows, hangers, grounding kits, adapters and miscellaneous installation hardware. The radio end of the waveguide will be connected directly to the radio if at all possible. In certain situations, a small section of flex may be required to make the connection from the waveguide to radio as approved by the COR. Bends and twists in the flex section will be minimized as to minimize losses. All installation materials and hardware shall be supplied in types and quantities sufficient to meet the requirements of the transmission line manufacturer and the project specifications for

mounting and connection of premium transmission lines, including, without limitation, the observance of minimum bending radius.

4. COMMUNICATION TRANSMISSION LINE GROUNDING:

   (1) All waveguide and coaxial cable shields shall be grounded at three (3) locations (four or more on towers taller than 200 ft), using appropriate transmission line grounding kits:

      1) At the top of the vertical run 12” – 18” below the bend to the horizontal run to the antenna connector.

      2) At the bottom of the vertical run 12” – 18” above the bend to the horizontal run under the ice bridge.

      3) Just outside the building entrance.

      4) Midway on the vertical run when the vertical run is 200’, and every 75’ – 100’ on towers taller than 200’.

   (2) Where necessary, the contractor shall provide a main grounding bus bar to accommodate the connections described in 14.6.3.4.1.3 above. This copper bar shall be a minimum of 1/4" x 4" x 12" and have insulated standoffs. It shall be pre-drilled with 7/16" holes to accept lugs from the main ground wire (#4/0 provided by site owner) and the waveguide grounding kits. Refer to standard drawing 41 7001, detail A.

   (3) The waveguide ground clamp and ground strap are to be installed in such a manner that they make a connection to a continuous electrical conductor that shall have the least amount of bending possible (8” minimum) to reduce the impedance of the bend to lightening current.

   (4) If bus bars are used to bundle multiple waveguide grounding straps, flat copper plate (1/4” minimum thickness) shall be used for the bus bars. The bus bar dimensions shall be large enough (height x width) such that the path of the current from the waveguide grounding straps to the grounding conductor shall comply with the 8” radius of bend rule. The bus bar shall be installed on an angle of approximately 45 degrees and the ground strap attachment point to the vertical waveguide shall be between 12 and 60 inches away from the start of the bend. Refer to standard drawing 41 7001, detail B.

5. TESTING: After all waveguide supports and clamps have been put in place and tightened, all antenna-feedline systems shall be sweep tested per Section 14.6.3.7.3 of this standard.

6. PRESSURIZATION EQUIPMENT:

   (1) GENERAL:

      1) Contractor shall supply and install automatic dehydrator/pressurization equipment at each site where required by the project specification. The dehydrator shall be the Andrew MT-300 or 600 series or equivalent, sized appropriately for the total current and future volume of the waveguide at the site it will service, and shall be installed on a suitable wall-mount shelf. The dehydrator shall be set to operate between 1.5 and 6.5 lbs./sq. in. Contractor shall provide all required pressurizing accessories including without limitation manifolds, fittings, hose, pressure gauge and shutoff valve for each waveguide run, and miscellaneous installation hardware including one extra change of desiccant.

      2) Manifolds shall be sized to accommodate new and existing pressurized waveguides, as well as two additional spare ports.

3) Each pressurization system shall include sensors to provide separate dry form C or solid state contacts which will provide low pressure, high pressure, excess run, power failure, and humidity alarms. The high-pressure alarm contacts shall operate at pressures higher than 5 pounds per square inch. The alarm contacts shall be set for low alarm at 1.0 lbs./sq. in. and the high alarm shall be set for 7.0 lbs./sq. in.

(2) TESTING: Each waveguide run shall be tested for leakage after installation. Pressurizer/dehydrator shall be operated until gauge pressure reaches between 6.5 and 8 psi for the waveguide under test and the line shutoff valve at the manifold shall then be closed. Loss of pressure shall not exceed 1 psi in 24 hours, corrected for variations caused by changes in temperature. After tests are completed, waveguide pressure should be set to 3 lbs/sq. in.

7. INSTALLATION, TURN-UP, AND TEST:

(1) GENERAL:

1) Contractor shall provide all materials, tools, test equipment, labor, supervision, shipping, travel and other items required to install, align, and test the equipment described in the project specification. Contractor shall supply adequate equipment spares to allow for failures during installation, turn-up and test without using Western's spare units supplied under the project specification.

2) Contractor shall submit to Western a detailed schedule for system installation, test and turn-up as specified in Section 1.1.4, "Construction Program". This schedule shall be coordinated with Western's COR.

3) Contractor shall follow the Original Equipment Manufacturer's initial start-up and test procedures. The original manufacturer's log shall be filled out completely. Where the original equipment manufacturer's warranty exceeds the Contractor's warranty, the registration document required by the manufacturer shall be submitted by the Contractor on behalf of Western using Western's business address.

4) Any manufacturer's warranty voided by failure on the part of the Contractor to follow the Original Equipment Manufacturer's instructions shall become the Contractor's responsibility to fulfill.

(2) INSTALLATION: Equipment shall be installed in and on existing equipment shelters and towers. Specifics regarding exact antenna placement on towers (i.e. leg, azimuth, etc.) and location of racks in buildings will be provided in site specific drawings and data tables.

(3) FIELD TEST AND ALIGNMENT:

1) Contractor shall apply power to all equipment and perform manufacturer's required initial turn-up tests. Results of this testing shall be recorded and made part of the site records and the system test record. When the manufacturer's warranty exceeds the Contractor's warranty the Contractor shall comply with 14.6.3.7.1.

2) All antenna transmission line subsystems shall be sweep-tested for return loss and verified to be greater than 29 dB for no less than 80% of the frequency band of operation. Results of this testing shall be recorded and made part of the site records and the system test record. The center 100MHz of the operational frequency band of the waveguide shall be swept to produce a TDR report showing the effects of connectors, waveguide bends and other abnormalities in the overall waveguide system.

3) Antenna alignment shall be performed without the use of terminal equipment to be installed later.

4) A Spectrum Analyzer interference measurement shall be made at the radio end of the antenna-feeder subsystem, after antenna alignment, of the spectrum centered on the receiver frequencies and extending at least one radio channel-width above and below the assigned channels. A second measurement shall cover the frequency band of operation. This measurement shall be made with the lowest possible noise floor and recorded via photograph or plotter output and included in the test records.

5) Western representatives shall witness and participate in system testing as part of system acceptance and field training. Notification to Project Manager of scheduled start date of system testing shall be made in accordance with Standard 1 – General Requirements, Section 1.2.3 “Material Inspection”.

6) Contractor shall submit a complete test report including results of testing within 30 days of successful test completion. The test report shall include original field test data, test data summaries for each site, evaluation of test data, overall evaluation of performance for each waveguide segment, description of all discrepancies noted during testing and measures taken for correction, and recommendations for system maintenance and operation.

SECTION 14.7 TOWER INSPECTION AND MAINTENANCE

14.7.1 GENERAL: Furnish labor, materials, and equipment required for comprehensive inspection and maintenance of guyed and self-supported communication towers for Western.

1. INSPECTION AND ROUTINE MAINTENANCE: Perform inspections and routine maintenance in accordance with these specifications, to include but not limited to inspections of: the tower, guy wires, foundation and anchors, antenna system, electrical, lightning protection systems and grounding. Routine maintenance to be performed with inspections shall be conducted in accordance with 14.7.2.

2. NON-ROUTINE MISCELLANEOUS MAINTENANCE: If maintenance other than routine maintenance listed in 14.7.2 is required, the contractor shall provide a written estimate to the COR for review and approval prior to performing such maintenance to ensure adequate funding for obligation and payment purposes. The estimate shall include the applicable labor rate(s), multiplied by the estimated hours to perform the maintenance and any required materials at cost. No maintenance work shall be performed until approved by the COR.

3. REPORTS: An electronic copy of the inspection report only (PDF file format, no photographs) shall be provided via e-mail to the Project Communication Engineer as well as the COR at the e-mail addresses provided with the contact information for this project. Contractor shall also furnish a completed inspection report (PDF file format) with photos (JPEG file format), and a completed Tower Antenna Inventory Form for each tower, within 30 working days of inspection on Computer Disc (CD). The disc should be sent via U.S. mail to the Project Communication Engineer at the address provided.

14.7.2 INSPECTION AND MAINTENANCE WORK REQUIREMENTS:

1. FOUNDATIONS AND ANCHORS:

   (1) Inspect and note condition of concrete bases and anchor concrete.

   (2) Inspect and note anchor for erosion and creeping.

   (3) Visually inspect and note condition of anchor head welds.

   (4) Inspect and note anchor rod head for cracks, splits, bends, twist, or corrosion.

(5) Excavate to a depth of 1 foot below the surface, inspect and note anchor rods not embedded in concrete for corrosion.

(6) Inspect anchor fencing for damaged fabric, missing hardware, bent or broken posts, corrosion or missing locks or security issues.

(7) Inspect guy anchors for vegetation overgrowth.

2. TOWER:

(1) Measure and record plumb and twist.

(2) Visually inspect all tower hardware. Replace missing hardware, broken clips, and tighten loose hardware (except antenna or reflector adjustments hardware and feed line hardware in WNMO), and check for air leaks. Hardware associated with antenna reflectors and feed lines found loose shall be documented in the inspection report.

(3) Hand-inspect 100% of bolted connections with a wrench, tighten and re-torque those found loose (note number of connections found loose), and re-torque a minimum of 10% of the bolts on the tower.

(4) Inspect for cracked, bent, twisted, or missing members and areas that show signs of fatigue.

(5) Inspect and note condition of tower main members and guy plates.

(6) Inspect and note condition of safety climbing device.

(7) Inspect and note galvanized finish for damage or fading. Repair damage to galvanized coating on tower structure members.

(8) Inspect and clean all weep holes in pipe legs and bracing for proper drainage.

(9) Inspect and note condition of work platforms and hatches.

3. GUY WIRES:

(1) Inspect and note broken strands, wear/abrasion, and/or corrosion.

(2) Inspect and note condition of thimbles, turnbuckles, and clamps.

(3) Inspect and note bolted clamps for tightness.

(4) Inspect and note condition of turnbuckles.

(5) Re-tension guys to appropriate specifications as to plumb the tower and eliminate twist according to tower erection section 14.1.6.(6).

4. ANTENNA SYSTEMS:

(1) Inspect and note visible damage or distortion.

(2) Inspect and note hardware conditions – do not adjust or tighten hardware that affects antenna adjustment (tilt and azimuth).

(3) Inspect radomes and note any visible damage and missing hardware. Replace missing radome hardware.

(4) Measure and note the resistance of radome heater(s), if equipped.

(5) Inspect and note waveguide/coaxial cable supports, ice/waveguide bridge, retainers, and grounds. Also inspect waveguide/coaxial cable for dents and condition of flex sections.

(6) Inspect reflectors and note visible damage, loose hardware, bent members, and tower attachment. Do not adjust reflector tilt or azimuth.

(7) Inspect and note condition of ice shields, if mounted.

5. ELECTRICAL:

(1) Inspect and note condition of electrical conduit, pull boxes, vents and drains, and mechanical connections of conduit system to tower.

(2) Inspect tower lights and note loose or missing mounting bolts, loose sockets, and inspect for proper operation of tower lights.

6. LIGHTNING PROTECTION SYSTEMS:

(1) Inspect lightning protection systems on towers and note condition of rods or brushes, ground wires, and connection to ground cable at the base of the tower. Not all towers have lightning protection installed.

7. GROUNDING:

(1) Inspect and note condition of all ground cable and ground connections above ground.

8. TOWER PHOTOGRAPHS AND INVENTORY FORM:

(1) Contractor shall at a minimum, take the photographs listed below for each tower. Photographs shall be in full color and a minimum of 3 megapixels each. Photographs shall be included on the CD with completed inspection report submitted to the applicable Government point of contact as indicated in 14.7.1.3.

1) Minimum of three photos at various angles and at a distance from the tower such that the entire tower is in a single frame.

2) One photo taken directly up each face of the tower, showing the majority of the antennas on that face of the tower.

3) One photo taken directly up the center of the tower.

4) Photo(s) of waveguide/coax entry port(s) including associated ground bar/system taken from both inside and outside the building.

5) One photo of the waveguide/coax ladder from each side of the ladder.

6) One photo of foundation on tower or each leg.

7) Photos of visible tower and waveguide grounding.

8) One photo of each antenna.

9) Photos of tower lighting (if applicable).

10) One photo of tower light controller (if applicable).

11) Photo of tower nameplate if found.

12) Photos of any problems found.

13) Photos of each guy point on the tower (if applicable).

14) Photos of each guy anchor (if applicable).

(2) Contractor shall complete the Tower Antenna Inventory Form upon completion of inspections and submit the completed form along with all tower photographs taken to the Project Communication Engineer no later than 30 days after completion of tower inspections.

14.7.3 INSPECTION AND MAINTENANCE PERFORMANCE:

1. GENERAL: The Contractor shall perform all the services described in Section 14.7 of this specification in compliance with accepted industry standards, guidelines, and practices and in accordance with any quality assurance program normally used by the Contractor.

2. STANDARD: The standards by which performance of the tower inspection and maintenance will be assessed are outlined in the guide paragraphs of the project specification for each site(s) involved in the project.

Tower Antenna Inventory Form

Site Name: _____ Date: _____

Number	Destination (if known)	Azimuth (est +/-15 deg)	Height (ft)	Diameter/ Length (ft)	Type *	Radome (Y/N)	Radome Heater (Y/N)	Feedline **	Leg ***
1									
2									
3									
4									
5									
6									
7									
8									
9									
10									
11									
12									
13									
14									
15									
16									
17									
18									
19									
20									

* Antenna Types: Solid, Grid, Dipole, Yagi, Paraflector, Collinear
** Feedline Types: 1/2", 7/8", EW43, EW63, EW77

*** Legs are numbered starting from #1 at the first leg clockwise from true north and increasing in number while continuing clockwise around the tower.

Western
AREA POWER
ADMINISTRATION

CONSTRUCTION STANDARDS

STANDARD 15

DRAWINGS

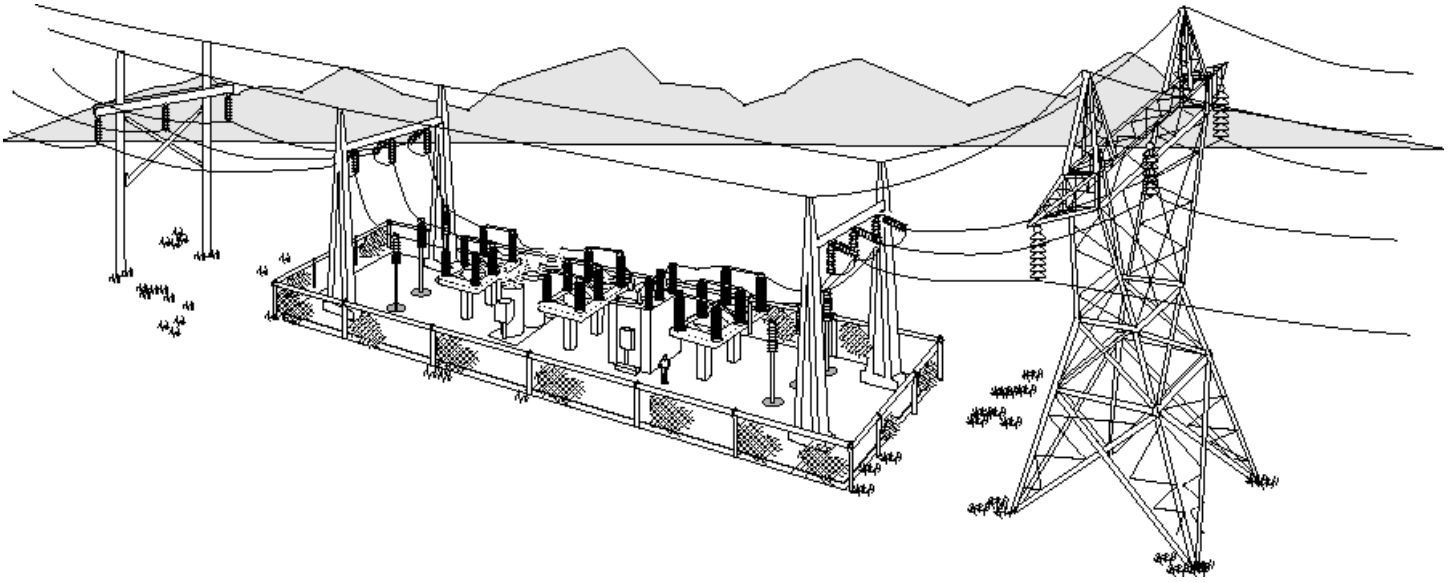

July 2009

SAFETY
A HABIT TO LIVE BY

STANDARD 15 – DRAWINGS

TABLE OF CONTENTS

Page Number

SECTION 15.1--GENERAL 2
1. SPECIFICATION DRAWINGS 2
2. CONSTRUCTION DRAWINGS 2
3. STANDARD DRAWINGS 2
4. INFORMATIONAL DRAWINGS 2
5. EXISTING INSTALLATION DRAWINGS 2
6. REFERENCE DRAWINGS 2
7. CONTRACTOR'S RESPONSIBILITY 2
8. ADDITIONAL AND REVISED DRAWINGS 2
9. ADDITIONAL COPIES OF DRAWINGS 2
10. PLAN AND PROFILE DRAWINGS, SAG TABLES, AND CHARTS 2

SECTION 15.2--AS-BUILT DRAWINGS 2
1. GENERAL 2
2. RECORDING INFORMATION 3
3. MARKING OF DRAWINGS 3
4. DRAWING REVIEW 3
5. AS-BUILT INFORMATION TO BE RECORDED 3
6. SUBMITTALS 3

SECTION 15.3--LIST OF DRAWINGS 3

STANDARD 15 – DRAWINGS

SECTION 15.1--GENERAL:

1. SPECIFICATION DRAWINGS: Specification drawings included herein are reduced reproductions and are not to scale. Some specification drawings show details of fabrication and other information not a part of the work. Disregard information and details, which are not applicable.

2. CONSTRUCTION DRAWINGS: Construction drawings are the specification drawings and any additional drawings required for use in construction. The construction drawings will be issued after contract award and may include amendment changes and other details, which make the drawings suitable to use for construction purposes.

3. STANDARD DRAWINGS: Where details shown on standard drawings included herein differ from project specification drawings or text, the details of project specification drawings or text shall govern.

4. INFORMATIONAL DRAWINGS: Some specification drawings have the words “FOR INFORMATION ONLY” appearing above the title block. These drawings show some information, which may be required for bidding purposes. These drawings do not show items to be furnished or work to be performed.

5. EXISTING INSTALLATION DRAWINGS: Some specification drawings have the words “Existing Installation” appearing above the title block. These drawings show the existing installations prior to modifications and may show some new work to be performed.

6. REFERENCE DRAWINGS: Reference drawings referred to on specification drawings, and not included herein, are not necessary for bidding purposes.

7. CONTRACTOR'S RESPONSIBILITY: Check all drawings and advise Western of any errors or omissions.

8. ADDITIONAL AND REVISED DRAWINGS: After award of contract, construction drawings will be furnished; and the specifications drawings may be supplemented by additional or revised general and detail drawings. Additional or revised drawings may show dimensions and details necessary for construction purposes more completely than are shown on the specification drawings for features of the work and for material and equipment not purchased prior to bid opening. Perform the work in accordance with the additional general and detail drawings or revisions furnished by Western at the applicable prices bid in the Bidding Schedule.

9. ADDITIONAL COPIES OF DRAWINGS: After award of contract, Western will furnish the following:

   (1) Additional copies of the specifications which include reduced-size drawings.
   (2) Four full-size prints of construction drawings.

10. PLAN AND PROFILE DRAWINGS, SAG TABLES, AND CHARTS: Plan and profile drawings, sag tables, charts, and other drawings required for construction will be furnished to the Contractor as soon as possible after Notice to Proceed.

SECTION 15.2--AS-BUILT DRAWINGS:

1. GENERAL: The Contractor shall keep one complete set of full-size construction drawings at the job site solely for the purpose of recording as-built conditions. The drawings shall be marked to show any change or variation in the actual construction, which does not match the construction drawings. The as-built set of drawings shall not be used for construction purposes.

2. RECORDING INFORMATION: Record information on the drawings concurrently with construction progress. Do not conceal work until the required information is recorded. Mark all drawings affected by the actual work which varies from the construction drawings.

3. MARKING OF DRAWINGS: As-built drawing marking shall be as follows:

   (1) Additions and notes in red.
   (2) Deletions in green.
   (3) Explanation notes in blue.

4. DRAWING REVIEW: The marked set of as-built drawings shall be available for inspection at all times. Prior to all progress payments, the Contractor and Western shall review the marked drawings to verify that all as-built conditions have been recorded. Progress payments may be withheld until the drawings are updated.

5. AS-BUILT INFORMATION TO BE RECORDED: Mark drawings with all actual construction which does not match the construction drawings including:

   (1) Field changes of dimension and detail.
   (2) Changes made by modifications.
   (3) Details not shown on original drawings.
   (4) Other information required to describe the as-built construction.

6. SUBMITTALS: Deliver complete set of marked as-built drawings to the COR for approval prior to the date of submission of your final invoice. See Section G, paragraph titled "Administrative Time".

SECTION 15.3--LIST OF DRAWINGS:

1. 01 2004-1 – Concrete Standards - General Outline and Reinforcement Notes

2. 01 2004-2 - Concrete Standards - General Outline and Reinforcement Notes

3. 01 2005 – Rev. A – Standard Designs - Sitework – Typical Water Crossing

4. 01 8000 – Rev. B – Design Standards – Unified Soil Classification

5. 31 0001-1 – Substation Standards – Switching Diagram – Operating Numbers – Bus Configurations

6. 31 0001-2 – Rev. A - Substation Standards – Switching Diagram – Operating Numbers – Bus Configurations

7. 31 1000 – Rev. D – Substation Standards – Identification and Security Signs

8. 31 1004 – Rev. B – Substation Standards – Insulation Coordination

9. 31 1005 – Rev. E – Substation Standards – Buses and Switches – Spacings and Clearances

10. 31 1006 – Rev. F – Substation Standards – Buried Insulated Cables and Conduit - Typical Details

11. 31 1007 – Rev. F – Substation Standards – Hot-Line Fittings - Details

12. 31 1020 – Rev. E – Substation Standards – Insulator and Hardware Assemblies

13. 31 1060 – Rev. F – Substation Standards – Grounding Details

STANDARD 15 – DRAWINGS

14. 31 1061 – Rev. D – Substation Standards – Cable Trench Grounding
15. 31 1063 – Rev. E – Substation Standards – Pipe-Bus - Grounding Plan
16. 31 1073 – Rev. D – Substation Standards – Lighting Fixture – Pole and Bracket Mounting
17. 31 1075 – Rev. H – Substations Standards – Switch Operating and Equipment Platforms- Electrical Design and Details
18. 31 1077 – Rev. C – Substation Standard – Ground Cable on Tubular Steel Structures – Support Details
19. 31 1079 – Rev. C – Substation Standards – Danger Sign for Shunt Capacitors
20. 31 1081 – Rev. D – Substation Standards – Stacking Post Insulators
21. 31 1085 – Rev. F – Substation Standards – Terminal and Fuse Boxes
22. 31 1086 – Rev. C – Substation Standards – Type G, H, and K Terminal Boxes
23. 31 1087 – Rev. A – Substation Standards – Stacking Post Insulators – Upright M & E Ratings
24. 31 1088 - Rev. A – Substation Standards – Stacking Post Insulators – Underhung M & E Ratings
25. 31 1089 – Rev. A – Substation Standards – Danger Sign
26. 31 1100 – Rev. G – Substation Standards – Equipment and Material Index
27. 31 1500 – Rev. A – Substation Standards – Grounding Plans – Typical Components
28. 31 1501 – Rev. A - Substation Standards – Fence Grounding Connections – Details
29. 31 1700 – Rev. A – Substation Standards – Conduit Installation – Details
30. 31 2000 – Rev. G – Substation Standards – Chain-Link Fence – General Requirements
31. 31 2001 – Rev. F – Substation Standards – Chain-Link Fence – Gate Latches
32. 31 2002 – Rev. C – Substation Standards – 5/8 & 3/4 DIA Connection Bolts
33. 31 2003 – Rev. C – Substation Standards – Typical Eyebolt and Step Details
34. 31 2014 – Rev. A – Substation Standards – Switch Operating Platforms – Steel Design and Details
35. 31 2038 – Rev. A – Substation Standards – Chain-Link Fence – Swing Gates
36. 31 2044 – Rev. B – Substation Standards – Equipment Cabinet Platforms – Steel Design and Details
37. 31 2045 – Rev. A – Substation Standards – Switch Operating Platforms – Steel Design and Details
38. 31 2047 – Substation Standards – Grounding Loop

39. 31 2049 – Rev. A – Substation Standards – Seismic Switchboard Base

40. 31 4001 – Rev. C – Substation Standards – Typical Duplex Switchboard – Surge Suppressor Networks – Detail Layout

41. 31 4003 – Rev. D – Substation Standards – Control Switches – Escutcheons, Lamps and Developments

42. 31 4004 – Rev. E – Substation Standards – Transformer – Sudden Pressure Relay – Schematic Diagram

43. 31 4005 – Rev. D – Substation Standards – Duplex Switchboard Panel – Wiring Diagram and Cabling Methods

44. 31 4008 – Rev. C – Substation Standards – Mimic Bus Color Standard

45. 31 5103 – Rev. C – Substation Standards – Hand Reset Auxiliary Relay – Test and Monitor Circuits

46. 31 6000 – Rev. E – Substation Standards – PCB Control Cabinets – Shielded Cable Grounding

47. 31 6005 – Rev. A – Substation Standards – Control Cable Color Code Identification

48. 31 6011 – Rev. B – Substation Standards – Typical Power Circuit Breaker – Wiring Diagram (Sh 1 of 3)

49. 31 6012 – Rev. B – Substation Standards – Typical Power Circuit Breaker – Wiring Diagram (Sh 2 of 3)

50. 31 6013 – Rev. B – Substation Standards – Typical Power Circuit Breaker – Wiring Diagram (Sh 3 of 3)

51. 41 1011 – Rev. C – Transmission Line Standards – Transmission Lines - Fence Grounding Hardware

52. 41 1012 – Rev. C – Transmission Line Standards - Wood Pole Structures – Grounding Details

53. 41 1015 – Rev. K – Transmission Line Standards – Weathering Steel and Concrete Pole Structures – Grounding Details

54. 41 1017 – Rev. C – Transmission Line Standards – Steel Towers – Overhead Ground Wire Assembly

55. 41 1018 – Rev. C – Transmission Line Standards – Steel and Concrete Pole Structures – Overhead Ground Wire Assembly

56. 41 1019 – Rev. C – Transmission Line Standards – Wood Pole Structures – Overhead Ground Wire Assembly

57. 41 1020 – Rev. B – Transmission Line Standards – Suspension Insulator Assemblies – Single String

58. 41 1021 – Rev. B – Transmission Line Standards – Suspension Insulator Assemblies – Double String

59. 41 1022 – Rev. B – Transmission Line Standards – Tension Insulator Assemblies – Single String

60. 41 1023 – Rev. D – Transmission Line Standards – Tension Insulator Assemblies – Double String

61. 41 1024 – Rev. A – Transmission Line Standards – Horizontal Post – Insulator Assemblies

62. 41 1025 – Rev. B – Transmission Line Standards – Suspension Insulator Assemblies – Vee String, Single String

63. 41 1027 – Rev. D – Transmission Line Standards – Lattice Steel Structures – Fiber Optic Cable Mounting

64. 41 1028 – Rev. D – Transmission Line Standards – Steel and Concrete Pole Structures – Fiber Optic Cable Mounting

65. 41 1029 – Rev. F – Transmission Line Standards – Wood Pole Structures – Fiber Optic Cable Mounting

66. 41 1030 – Rev. D – Transmission Line Standards – Fiber Optic Cable Mounting – Downlead Clamps and Bands

67. 41 1031 – Rev. E – Transmission Line Standards – Optical Ground Wire Assemblies

68. 41 1033 – Rev. B – Transmission Line Standards – Station Post – Jumper Insulator Assemblies

69. 41 2001 – Rev. C – Transmission Line Standards – Tower Bolts

70. 41 2017 – Rev. C – Transmission Line Standards – Special Earthwork

71. 41 2034 – Rev. A – Transmission Line Standards – Lattice Steel Towers – Structure Grounding

72. 41 2035 – Rev. A – Transmission Line Standards – Access Roads – General Requirements

73. 41 6005 – Rev. B – Standard Designs - Transmission Lines – Type 4SWT 115kV – Disconnecting Switch Structure

74. 41 6042 – Rev. D – Transmission Line Standards – Wood-Pole Dead End Details – For Overhead Ground Wire

75. 41 6047 – Rev. F – Transmission Line Standards – Guy Assembly and Details

76. 41 6049 – Rev. D – Transmission Line Standards – Concrete Anchors

77. 41 6050 – Rev. D – Transmission Line Standards – Anchor Rod Grouting Details

78. 41 6105 – Rev. B – Standard Designs - Transmission Lines – Type 4S and 4S-1, 69 and 115kV – Suspension Structure

79. 41 6106 – Rev. B – Transmission Line Standards – Douglas Fir Poles – Drilling Details

80. 41 6109 – Rev. B – Standard Designs - Transmission Lines – Type 3BT/4BT 69 and 115kV – Branch Line Structure

81. 41 6113 – Standard Designs - Transmission Lines – Crossarm Drilling Details – HS-1 and HSB-1 Structures – with Adjustable Spacer Fittings

82. 41 6116 – Rev. B – Standard Designs - Transmission Lines – Type ST-1 and LST-1 69 and 115kV – Tangent and Angle Tension Structures

83. 41 6118 – Rev. B – Standard Designs - Transmission Lines – Type 3TA-1 69 and 115kV – 3-Pole Tension Structure

84. 41 6122 – Rev. B – Standard Designs - Transmission Lines – Type HS-1 115kV – Suspension Structure

85. 41 6125 – Rev. A – Standard Designs - Transmission Lines – Type 3TA-1 Structures – Standard Guy Arrangement

86. 41 6133 – Rev. B – Standard Designs - Transmission Lines – Steel Angle Details – For Wood Pole Structures

87. 41 6138 – Rev. B - Standard Designs - Transmission Lines – Typical Details For – Dead End Tees

88. 41 6153 – Standard Designs - Transmission Lines –Typical Details for Optical – Ground Wire Splice Structures

89. 41 7000 – Rev. A - Communications Standard –Microwave Site Grounding – Typical Plan

90. 41 7001 – Rev. B - Communications Standard –Microwave Tower Grounding - Details

91. 41 7002 – Rev. C – Communications Standard – Building Grounding – Substation Details

92. 41 7003 – Rev. B – Communications Standard – Building Grounding – Remote Site Details

93. 41 7004 – Communications Standard – Equipment Rack – Layout & Details

94. 41 7005 – Communications Standard – Equipment Rack – Anchoring & Grounding Details

95. 41 7006 – Communications – Guy Tower Grounding – Standard - Anchor Ground Details

96. 41 9002 – Rev. M – Transmission Line Standards – Barbed Wire Gate – For Right-of-Way Fences

97. 41 9003 – Rev. C – Transmission Line Standards – Electric Barbed Wire Gate – For Right-of-Way Fences

98. 41 9004 – Rev. D – Transmission Line Standards – Wood Pole Structures – Aerial Patrol Mile Marker and Number Signs

99. 41 9005 – Rev. D – Transmission Line Standards – Lattice Steel Towers – Aerial Patrol Number and Warning Signs

100. 41 9007 – Rev. F – Transmission Line Standards – Structure Number Signs – Details and Location

101. 41 9008 – Rev. E – Transmission Line Standards – Lattice Towers – Danger Signs – Details and Locations

102. 41 9019 – Rev. C – Transmission Line Standards – Wood Pole Structures – Bog Shoe and Bog Anchor

STANDARD 15 – DRAWINGS

103. 41 9021 – Rev. A – Transmission Line Standards – Access Road Rehabilitation – Water Bar Construction

104. 41 9024 – Rev. D – Transmission Line Standards – Prefabricated Tubular Steel Gate

105. 41 9026 – Rev. C – Transmission Line Standards – Wood Pole Structures – Aerial Patrol Warning Signs – Details and Locations

106. 41 9027 – Rev. E – Transmission Line Standards – Steel Pole Structures – Aerial Patrol Mile Marker and Number Signs

107. 41 9028 – Rev. D – Transmission Line Standards – Steel Pole Structures – Aerial Patrol Warning Signs – Details and Locations

108. 41 9029 – Rev. B – Transmission Line Standards – Aerial Patrol Warning Signs and Marker Ball – Marking Diagrams

109. 43 2203 – Rev. B – Transmission Line Structure Standards – Steel Pole Structures – Maintenance Provisions - Work Ring

110. 43 2206 – Rev. H – Transmission Line Structure Standards – Steel Pole Structures – Maintenance Provisions – Outlines

111. 43 2207 – Rev. G – Transmission Line Structure Standards – Steel Pole Structures – Maintenance Provisions – Outlines

112. 43 2208 – Rev. H – Transmission Line Structure Standards – Steel Pole Structures – Maintenance Provisions – Outlines

113. 43 2209 – Rev. G – Transmission Line Structure Standards – Steel Pole Structures – Maintenance Provisions – Outlines

114. 43 2210 – Rev. H – Transmission Line Structure Standards – Steel Pole Structures – Maintenance Provisions – Details

115. 43 2212 – Access Road Standards – Access Roads – General Requirements

116. 43 2213 – Rev. A – Transmission Line Structure Standards – Steel Pole Structures – Anti Perch Provisions