CRITICAL ENERGY INFRASTRUCTURE INFORMATION

NOTICE

Materials contained in this document include Critical Energy Infrastructure Information (CEII). All materials designated as CEII must be handled and protected in accordance with the CEII Policy of Western Area Power Administration (WAPA) and the CEII Policy of any affected Transmission Owner (TO) identified in this document or attached materials.

Generation Interconnection Feasibility Study for Western Area Power Administration Upper Great Plains Region GI-0824 – 400 MW Project 250

PROPRIETARY

Version 1.0

May 18, 2010

Study work performed by:

Thinh Bui-TSI
Mary Melvin-TSI
Gayle Nansel - WAPA
Simon Cherucheril-TSI

TranServ International, Inc.
2300 Berkshire Lane North Suite F-1
Minneapolis, MN 55441
Phone: 763.205.7080 Fax: 763.553.2813

Table of Contents

REVISION HISTORY 5
LEGAL NOTICE 6
EXECUTIVE SUMMARY 7
1. INTRODUCTION 11
2. DESCRIPTION OF REQUEST 14
3. STUDY CRITERIA, METHODOLOGY, AND ASSUMPTIONS 15
3.1. AD HOC STUDY GROUP 15
3.2. NETWORK ANALYSIS CRITERIA 15
3.3. CONSTRAINED INTERFACE OR FLOWGATE ANALYSIS CRITERIA 16
3.4. COMPUTER PROGRAMS AND INPUT FILES USED 17
3.5. MODEL DEVELOPMENT DETAILS 17
3.5.1. PRE - GI-0824 MODEL DEVELOPMENT 17
3.5.2. GI-0824 STUDY REQUEST MODEL DEVELOPMENT 23
3.6. STUDY PROCEDURE 25
3.7. CONTINGENCIES CONSIDERED 25
3.8. MONITORED ELEMENTS AND STUDY AREA 26
4. STEADY STATE ANALYSIS RESULTS 27
4.1. CONTINGENCY ANALYSIS 28
4.1.1. 2010 SUMMER PEAK ANALYSIS 28
4.1.2. 2010 SUMMER OFF-PEAK ANALYSIS 34
4.1.3. 2010 SUMMER OFF-PEAK ALTERNATE DISPATCH ANALYSIS (SINKING TO WAPA) 45
4.1.4. 2016 SUMMER PEAK ANALYSIS 51
4.1.5. 2016 SUMMER PEAK SENSITIVITY ANALYSIS 57
4.2. CONSTRAINED INTERFACE ANALYSIS 63
4.2.1. 2010 Summer Peak Analysis 63
4.2.2. 2010 Summer Off Peak Analysis 65
4.2.3. 2016 Summer Peak Analysis 67
4.2.4. 2016 Summer Peak Sensitivity Analysis 69
4.3. PRIOR OUTAGE ANALYSIS 70
5. STABILITY ANALYSIS 71
6. SHORT CIRCUIT ANALYSIS 72
6.1. BASE CASE DEVELOPMENT 72
6.2. SHORT – CIRCUIT CALCULATIONS 72
7. CONCEPTUAL COST ESTIMATE 74
Appendix A: Model Documentation for Steady State 78
Appendix B: Powerflow One Line Diagrams 89

This document contains confidential and proprietary information of WAPA or TranServ International, Inc. Do not copy or distribute.

Appendix C: Steady State Detailed Analysis 98
Appendix D: Constrained Interface Results 132
Appendix E: Contingency 133

This document contains confidential and proprietary information of WAPA or TranServ International, Inc. Do not copy or distribute.

Revision History

Version	Date	Description	Author
0.1	03/11/2010	Original Draft Report	TranServ
0.2	04/28/2010	Draft Report	TranServ
0.3	05/10/2010	Draft with Updates	TranServ
1.0	05/18/2010	Approved Version	TranServ

This document contains confidential and proprietary information of WAPA or TranServ International, Inc. Do not copy or distribute.

Legal Notice

This is a joint feasibility study report by Western Area Power Administration (Western, a.k.a. WAPA), Basin Electric Power Cooperative (BEPC), and TranServ. Neither TranServ, nor Western nor BEPC, nor any person acting on or in their behalf, makes any warranty, expressed or implied, with respect to the use of any information or methods disclosed in this document, or assumes any liability with respect to the use of any information or methods disclosed in this Report. Recipients of this Report release TranServ, BEPC, and WAPA from any liability for direct, indirect, consequential or special loss or damage whether arising in contract, warranty, express or implied, tort or otherwise, and regardless of fault, negligence and/or strict liability.

.

This document contains confidential and proprietary information of WAPA or TranServ International, Inc. Do not copy or distribute.

Executive Summary

Basin Electric Power Cooperative (BEPC) commissioned TranServ to perform an Interconnection Feasibility Study (IFS) for a 400 MW wind farm Large Generator Interconnection (LGI) to the Western/Heartland Consumers Power District/Basin Electric Power Cooperative Integrated System (IS) at Western's Fort Thompson 345/230 kV substation on the 230 kV bus. This IFS was performed on an out-of-queue order basis. This Interconnection Request, identified as Request No. GI-0824 in Western's Generation Interconnection Queue, is posted on its Open Access Same Time Information System (OASIS). This IFS evaluated short-circuit impacts and injection related steady-state impacts attributed to the proposed request. An Ad Hoc Study Group was formed in the study process by WAPA.

This is a joint feasibility study report by WAPA and TranServ. As part of this study, steady state and regional constrained interface analyses were performed by TranServ under WAPA direction and oversight and the short circuit study was performed by WAPA. This feasibility study report was compiled by TranServ based on the steady state and regional constrained interface results, and short circuit results and facility upgrade costs provided by WAPA. WAPA also made determination of injection constraints that are required to be mitigated by the Interconnection Customer and developed the mitigation plan for interconnection with consultation from the Ad Hoc Study Group.

This IFS evaluated the impact of the proposed wind farm on transmission system performance, including steady-state and short-circuit analyses. The scope of the IFS is limited to identifying mitigation for injection constraints that likely would limit the ability of the generator to interconnect. In accordance with WAPA IFS practices, this study only identifies injection related steady-state impacts (i.e. local area thermal and voltage impacts under system intact and N-1 contingency conditions) and short-circuit impacts that would be required to be mitigated in order for this LGI to interconnect at the requested point of interconnection (POI).

The subject interconnection request includes only an energy resource interconnection service option and therefore, this study did not address deliverability or transmission service from the GI-0824 project. This analysis considered the subject request's impact on Category A, Category B and Category C contingency conditions.

Analyses were performed using 2010 summer peak and summer off peak models, and a 2016 summer peak model from the 2010 NMORG Package. All higher queued projects within an approximate 75 mile radius of the POI of the generation interconnection request and projects

This document contains confidential and proprietary information of WAPA or TranServ International, Inc. Do not copy or distribute.

requested by the Ad Hoc Study Group and WAPA were added to the 2010 NMORG Package models to form the 2010 and 2016 Pre-GI-0824 models. No MISO, MPC, or Square Butte (MP) higher queued projects are within a 75 mile radius of the POI of the generation interconnection request.

In addition to identifying the injection constraints, several limiting elements with DFs due to the subject request of at least 3% were found to load beyond their applicable ratings in the post-GI-0824 models. These significantly affected facilities (SAF) have been identified for informational purposes only and would not be considered to require mitigation for granting interconnection service.

This study investigated two distinctly different dispatch scenarios for off-peak conditions. The first scenario investigated involved increasing the GI-0824 generation and decreasing generation to the south and east. The second scenario investigated involved increasing the GI-0824 generation and decreasing specific WAPA generation north of GI-0824. Elements that were identified as injection constraints based on the WAPA dispatch scenario for the off-peak case.

Based on the study assumptions as given in Section 3 of this report, the following interconnect options with conceptual costing were determined for GI-0824:

1) Interconnection of 227 MW of Energy Resource (ER) is feasible with no facility improvements.

2) Interconnection of 400 MW of ER is feasible with modifications to terminal equipment associated with the Fort Thompson – Lake Platte – Fort Randall, Fort Thompson – Fort Randall and Hanlon – Sioux Falls 230 kV lines. This conceptual cost option is **$654,000**[1].

In addition to the above cost, the conceptual cost for the facilities required at the point of interconnection is **$2,994,333**[2].

It is important to note that neither of these options address the stability, operational and delivery constraints that may be identified in future studies. GI-0824's impact as identified in this report may become invalid if the assumptions made about prior queued generation projects prove to be incorrect.

[1] Planning level non-binding conceptual cost estimate prior to commissioning of GI-0710. See Section 7 for estimate details.
[2] Planning level non-binding conceptual cost estimate for facilities required at POI. See Section 7 for estimate details.

This document contains confidential and proprietary information of WAPA or TranServ International, Inc. Do not copy or distribute.

Steady-State Analysis Results

Thermal Constraints

Thermal loadings that exceed the element rating and are impacted by greater than a 3% DF due to the subject request are identified in this study in Section 4 of this report. The proposed GI-0824 wind farm impacted several transmission facilities; therefore, these injection constraints must be ameliorated prior to granting interconnection service to the subject request.

Any results related to the delivery of power from this project are for informational purposes only. A separate delivery study would be required to identify delivery related impacts and associated system upgrades, if required. Thermal and voltage violations found in this study that could be identified in a delivery study as delivery constraints are referred to in this report as significantly affected facilities (SAF).

No system intact injection constraints due to the subject request were found.

Under contingency conditions, there are several SAF due to the subject request that are considered as injection constraints. These injection constraints must be mitigated prior to granting interconnection service to the subject request.

- The **Fort Thompson – Fort Randall 230 kV** line is overloaded above its normal and emergency ratings due to the proposed project following the loss of the Fort Thompson – Lake Platte 230 kV line for both dispatch scenarios.
- The **Fort Thompson – Lake Platte – Fort Randall 230 kV** line is overloaded above its normal and emergency ratings due to the proposed project following the loss of the Fort Thompson – Fort Randall 230 kV line for both dispatch scenarios.
- The **Hanlon – Sioux Fall 230** kV line is overloaded above its normal and emergency ratings due to the proposed project following the loss of the double circuit Fort Randall – Sioux City and Fort Randall – Utica Junction 230 kV line for both dispatch scenarios.

Under contingency conditions, there are several SAF due to the subject request that are not considered as injection constraints but would likely show in a transmission service study to be constraints. The Huron – GI-0710 230 kV line is overloaded above its emergency rating due to the proposed project only when the GI-0710 project is modeled. This loading is not considered an injection constraint but could be found to be an injection constraint if the GI-0710 project comes to fruition. Complete details on all SAF identified are given in Section 4 of this report

This document contains confidential and proprietary information of WAPA or TranServ International, Inc. Do not copy or distribute.

Voltage Constraints

Bus voltages outside the bus owner's acceptable voltage range, which are detrimentally impacted by at least 1% due to the subject request, are considered SAF. These SAF are identified in this study in Section 4 of this report.

Although no voltage injection constraints were identified, it is also important to note that numerous SAF voltage violations were identified when GI-0824 was sunk to the south and east. If the ultimate sink for the GI-0824 project is MISO or another entity to the south or east these voltage constraints would need to be ameliorated. For voltage violations due to critical contingencies that terminate at the Fort Thompson 345 kV bus, a special protection scheme could be used to ameliorate the constraint.

Constrained Interface Analysis

This study has evaluated the impact of the proposed project on all MAPP and regional constrained interfaces. These results given for informational purposes only, to identify potential third party flowgate issues if the interconnection customer were to request long term transmission service from this request, are considered SAF and are listed in Section 4 of this report.

Prior outage Analysis

A prior outage analysis is outside the scope of this study; therefore, a prior outage analysis was not performed as part of this study.

Stability Analysis

A dynamic stability analysis is outside the scope of this study; therefore, a dynamic stability analysis was not performed as part of this study.

Short Circuit Analysis

WAPA performed a short circuit analysis of available fault currents for the immediate project area. A comparison of the available fault currents to the breaker capabilities at the applicable facilities indicates that the existing system has adequate interrupting capabilities to accommodate the 400 MW interconnection.

This document contains confidential and proprietary information of WAPA or TranServ International, Inc. Do not copy or distribute.

1. Introduction

Basin Electric Power Cooperative (BEPC) commissioned TranServ to perform an IFS for a 400 MW wind farm LGI to the IS at the Fort Thompson 345/230 kV substation on the 230 kV bus. This IFS was performed on an out-of-queue order basis.

This is a joint feasibility study report by WAPA and TranServ. As part of this study, steady state and regional constrained interface analyses were performed by TranServ under WAPA direction and oversight and the short circuit study was performed by WAPA. This feasibility study report was compiled by TranServ based on the steady state and regional constrained interface results, and short circuit results and facility upgrade costs provided by WAPA.

This IFS evaluated the impact of the proposed wind farm on transmission system performance, including steady-state and short-circuit analyses. The scope of the IFS is limited to identifying mitigation for injection constraints that likely would limit the ability of the generator to interconnect. In accordance with WAPA IFS practices, this study only identifies injection related steady-state impacts (i.e. local area thermal and voltage impacts under system intact and N-1 contingency conditions) and short-circuit impacts that would be required to be mitigated in order for this LGI to interconnect at the requested POI.

Queue Position	Queue Date	County	State	Max Output (MW)	Point of Inter-connection	OASIS In Service Date	Inter-connection Service Type	Fuel Type
GI-0824	12-03-2008	Buffalo and Hyde	SD	400	Ft. Thompson 345/230 kV substation	09/14/2010	ER	Wind

As shown in the table above, this request seeks to interconnect a new 400 MW wind farm to Western's Fort Thompson 345/230 kV substation. This Generation Interconnection Feasibility Study analyzed the impact of this addition, located in central South Dakota, in accordance with the MAPP DRS study criteria as posted on the MAPP website. An Ad Hoc Study Group was formed in the study process by WAPA.

The subject interconnection request includes only an energy resource interconnection service option and therefore, this study did not address deliverability or transmission service from the GI-0824 project. This analysis considered the subject request's impact on Category A, Category B, and Category C contingency conditions in the study area as defined in Section 3.8 of this report.

This document contains confidential and proprietary information of WAPA or TranServ International, Inc. Do not copy or distribute.

Analyses were performed using 2010 summer peak and high transfer summer off peak models, and a 2016 summer peak model from the 2010 NMORG Package. All higher queued projects within an approximate 75 mile radius of the POI of the generation interconnection request and projects requested by the Ad Hoc Study Group and WAPA were added to the 2010 NMORG Package models to form the 2010 and 2016 Pre-GI-0824 models. These higher queued projects were dispatched to load, east of the Twin Cities in the Midwest ISO dispatch scenarios and to Groton and Oahe generation for the WAPA dispatch scenario. No Midwest ISO, Minnkota Power Cooperative, or Square Butte (Minnesota Power) higher queued projects are within a 75 mile radius of the POI of the generation interconnection request.

In addition to identifying the injection constraints, several limiting elements with DFs due to the subject request of at least 3% were found to load beyond their applicable ratings in the post-GI-0824 models. Throughout this report, these limiting elements are referred to as SAF. This study has identified the system intact and N-1 SAF. These SAF have been identified for informational purposes only and would not be considered to require mitigation for granting interconnection service. These SAF however may be found in a deliverability or transmission service study as constraints to granting deliverability or transmission service when deliverability or long term transmission service is requested for the GI-0824 project.

Figure 1-1 further illustrates the assumed connections of the subject request to the existing/planned transmission system. This figure shows only the 2010 summer peak case as an example of the connections of the subject request to the existing transmission system. It should be noted that GI-0710, GI-0711, and GI-0712 were modeled as on-line in the peak cases and as off-line in the off-peak case as discussed in Section 3.5.1 of this report.

This document contains confidential and proprietary information of WAPA or TranServ International, Inc. Do not copy or distribute.

Figure 1-1
GI-0824 One-line Diagram

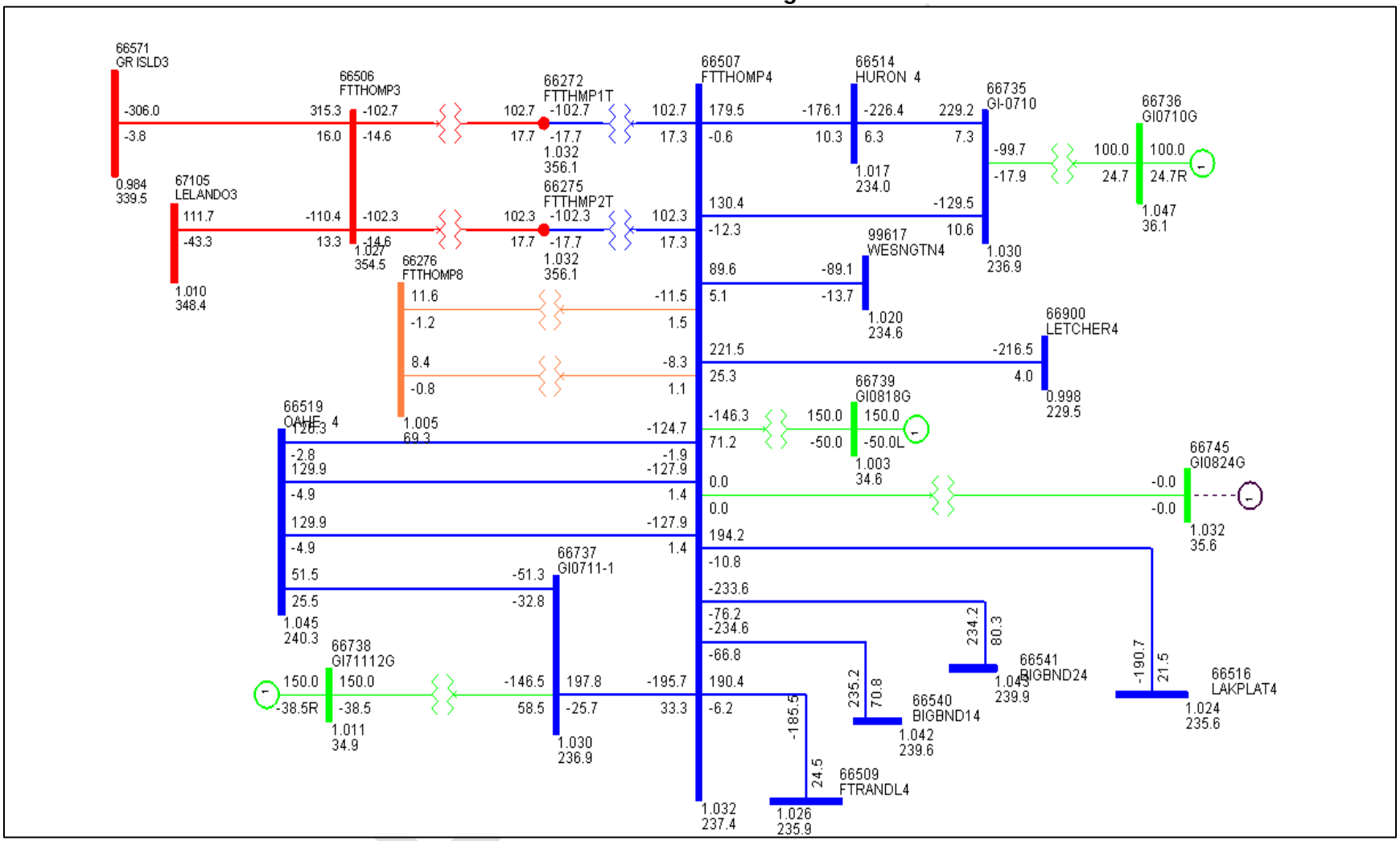

2. Description of Request

Project GI-0824, to be located in central South Dakota, is a new wind farm requesting a POI to the existing Fort Thompson 345/230 kV substation on the 230 kV bus. Figure 2-1 shows the project POI.

Figure 2-1: GI-0824 Project Description

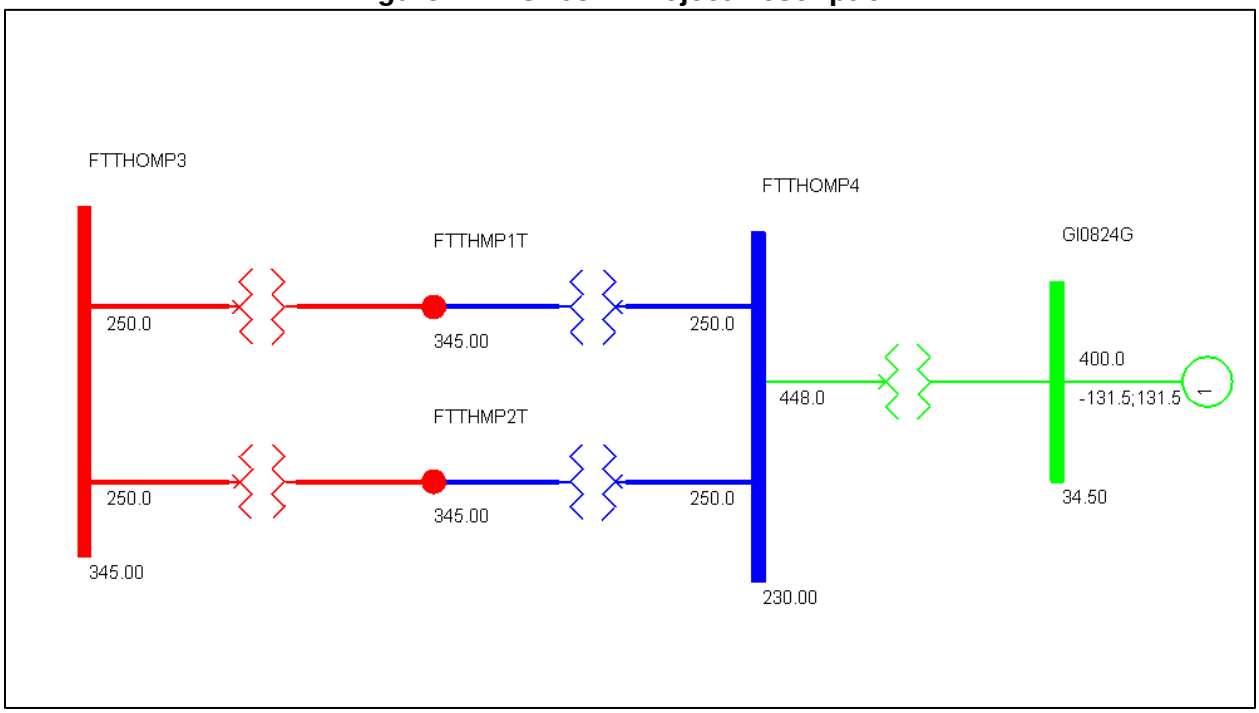

Project GI-0824 is assumed to consist of two hundred and sixty seven GE 1.5 MW wind turbine generators or 400 MW of output capability. The wind farm was modeled as one equivalent generator rated at 400 MW with reactive power capability of + 95% and – 95% power factor (+131.5 MVAR and -131.5 MVAR) and a scheduled voltage of 1.03 p.u. at the POI. The equivalent generator was modeled as connected to a 34.5/230 kV equivalent generator step-up transformer rated at 448 MVA, 8% positive sequence impedance on the transformer 448 MVA base and an X/R ratio of 30.

WAPA's minimum requirement for generation VAR control is +/- 0.95 power factor at the POI. This feasibility study did not model the project GI-0824 collector system. These model assumptions are illustrated in Figure 2-1.

This document contains confidential and proprietary information of WAPA or TranServ International, Inc. Do not copy or distribute.

3. Study Criteria, Methodology, and Assumptions

3.1. Ad Hoc Study Group

This Interconnection Feasibility Study (IFS) for Project GI-0824 was performed by TranServ under the direct supervision of WAPA. An ad hoc study group was formed by WAPA for study input from the following transmission owners (TOs): Western Area Power Administration, Basin Electric Power Cooperative, Central Iowa Power Cooperative, Central Power Electric Cooperative, Corn Belt, Dairyland Power, Great River Energy, Montana Dakota Utilities, MidAmerican Energy, Manitoba Hydro, Minnesota Power, Midwest ISO, Minnkota Power Cooperative, Missouri River Energy Services, Northwestern, Otter Tail Power, and Excel Energy.

3.2. Network Analysis Criteria

A Network Analysis was performed to determine the impact of the request on all transmission facilities in study areas as shown in **Table 3-5**. Contingency analyses included single branch and selected multi-element contingencies on facilities in the study area as shown in Table 3-5. The criterion used to flag thermal overloads was 100% of continuous rating (Rate A in PSS/E). Although thermal loadings were initially screened using Rate A, SAF were identified based on MAPP DRS Policies and Procedures which allows the emergency rating given in Rate C to be used post contingent.. All overloaded facilities that exceed the continuous rating system intact or the emergency rating post contingent that had a TDF (Transfer Distribution Factor) greater than 5% for system intact and 3% for contingencies due to the generation addition and an increase in flow greater than 1 MW due to the generation addition were flagged as SAF.

The following formula was used to calculate the % TDF on a given transmission facility:

$$\text{TDF} = 100 \times \frac{\text{MVA flow (with Subject Request)} - \text{MVA flow (w/o Subject Request)}}{\text{Project Size}}$$

This document contains confidential and proprietary information of WAPA or TranServ International, Inc. Do not copy or distribute.

3.3. Constrained Interface or Flowgate Analysis Criteria

A constrained Interface and /or flowgate analysis were performed to determine the impact of the proposed project on all MAPP and regional interfaces. There are two types of interfaces, PTDF interfaces and OTDF interfaces. A PTDF interface monitors a system intact condition and an OTDF interface monitors a contingency condition. An impact analysis, on all MAPP and regional interfaces was performed to determine if the subject request significantly affected these interfaces in accordance with MAPP DRS Policies and Procedures. According to these policies, all interfaces with PTDF/OTDF threshold of 5%/3% are flagged as SAF. The DFCALC program from the 2010 NMORG Package was used for this analysis.

PTDF or OTDF were calculated for each interface as given in the following equations:

$$\text{PTDF} = 100 \times \frac{\text{System Intact MW Flow (Post-Project)} - \text{System Intact MW Flow (Pre-Project)}}{400\ \text{MW}}$$

$$\text{OTDF} = 100 \times \frac{\text{Post Contingent MW Flow (Post-Project)} - \text{Post Contingent MW Flow (Pre-Project)}}{400\ \text{MW}}$$

This document contains confidential and proprietary information of WAPA or TranServ International, Inc. Do not copy or distribute.

3.4. Computer Programs and Input Files Used

Siemens Power Technologies, Inc. (PTI) PSS/E and MUST computer power flow programs and evaluation software were used to determine system performance. Analysis was performed using MUST version 9.0 and PSS/E version 29.

3.5. Model Development Details

The following models from the 2010 NMORG Package provided by WAPA were used for this study.

- *sp10aa.sav*: 2010 summer peak model
- *urg-so10aa.sav*: 2010 summer off peak model
- *sp16aa*.sav: 2016 summer peak mode

3.5.1. Pre - GI-0824 Model Development

The subject request was evaluated using a 2010 summer peak, a 2010 summer off-peak and a 2016 summer peak power flow case originated from the 2010 NMORG Package. All higher queued projects within an approximate 75 mile radius of the POI of the generation interconnection request as well projects requested by the Ad Hoc Study Group and WAPA were added to 2010 summer peak, 2010 summer off peak, and 2016 summer peak models. Based on the Ad Hoc Study Group recommendations, generators in the geographic area of the project were dispatched at their maximum capability. These projects were sunk to load east of the Twin Cities per WAPA direction. The Rapid City DC tie was adjusted to 200 MW West to East flow for all cases. SW MN wind was set to 1200 MW in the off peak case and remained as modeled in the NMORG Package peak models in the peak cases. To facilitate an 81% North Dakota off peak load scenario and maintain NDEX at 2080 MW, Big Stone was set to pmin and the Square Butte DC line was set to 500 MW.

The 2010 summer off peak case was modified to include the new Letcher – Mitchell 115 kV line, turn on a SVC unit in Manitoba Hydro area, turn off the Groton Synchronous Condenser, and turn off the line reactance on the Fort Thompson – Grand Island and Fort Thompson – Leland Olds 345 kV lines.

This document contains confidential and proprietary information of WAPA or TranServ International, Inc. Do not copy or distribute.

The following Pre-GI-0824 models were developed

- *sp10bb.sav*: 2010 summer peak model
- *urg-so10bb.sav*: 2010 summer off peak model
- sp16bb.sav: 2016 summer peak model

Table 3-1 lists prior queued generation within a 75 mile radius of the study project that were added to the 2010 NMORG Package models to form the 2010 and 2016 Pre-GI-0824 models.

This document contains confidential and proprietary information of WAPA or TranServ International, Inc. Do not copy or distribute.

Table 3-1
WAPA Prior Queued Projects included in the Pre-GI-0824 Models

Bus Number	Project Number	QUEUE DATE	POINT OF INTERCONNECTION	SMR OUTPUT (MW)	REQ'D IS DATE	2010 NMORG Peak MW *sp10aa.sav*	Pre-GI-0824 2010peak MW	2010 NMORG Off-peak MW *urg-so10aa.sav*	Pre-GI-0824 off-peak MW	2016 NMORG Peak MW *sp16aa.sav*	Pre-GI-0824 2016peak MW
66604	[3]GI-0514	01-Nov-05	Big Bend 230kV	225	01-Jul-07	Withdrawn	Not included	Withdrawn	Offline	Not modeled	Not Included
99616	GI-0602	31-Mar-06	Wessington Springs 230kV	100	01-Dec-08	10.5	100	10.5	100	10.5	100
66736	GI-0710	24-May-07	Ft. Thompson – Huron 230kV	100	31-Dec-09	Not modeled	100	Offline	Offline	Not modeled	100
66738	GI-0711	11-Jun-07	Ft. Thompson-Oahe 230kV	50	01-Jun-10	Not modeled	50	Offline	Offline	Not modeled	50
67119	GI-0713	11-Jun-07	Ft. Thompson-Sx. Falls 230kV(near wessington	50	01-Jun-10	offline	50	Offline	50	Offline	50
66738	GI-0712	11-Jun-07	Ft. Thompson-Oahe 230kV	100	01-Jun-10	Not modeled	100	Offline	Offline	Not modeled	100
67119	GI-0714	11-Jun-07	Ft. Thompson-Sx. Falls 230kV(near wessington	100	01-Jun-10	offline	100	Offline	100	Offline	100
66740	GI-0809	05-May-08	Winner-Gregory 115kV	150	01-Jun-10	Not modeled	150	Not modeled	150	Not modeled	150
66739	GI-0818	15-Jul-08	Ft Thompson 230kV	150	01-Sep-10	Not modeled	150	Not modeled	150	Not modeled	150

[3] The GI-0514 request was withdrawn and not modeled in the peak cases. Also, The GI-0514 request was turned off in the off peak load scenario since the project has been withdrawn after the model was developed.

This document contains confidential and proprietary information of WAPA or TranServ International, Inc. Do not copy or distribute.

In addition to the projects shown in **Table 3-1**, an attempt was made to add the prior-queued generating projects, GI-0710, GI-0711, and GI-0712, to the summer off peak model. These projects were not under study at the time this study began and appropriate upgrades had not been determined and thus could not be modeled. Adding the GI-0710, GI-0711, and GI-0712 projects resulted in excessively high loadings and low voltages in the Fort Thompson area. This is a consequence of adding over 1100 MW of generation including existing higher queued projects with no associated transmission reinforcements. The 2010 summer off peak base case was deemed unusable and the GI-0710, GI-0711, and GI-0712 projects were subsequently turned off in the off peak base case. If GI-0710, GI-0711, and GI-0712 proceed, the subject request will require further evaluation. However, the GI-0710, GI-0711, and GI-0712 projects are on in the peak cases

All Prior queued projects were dispatched to load east of the Twin Cities per WAPA direction. MWEX was adjusted as required to not exceed its limit.

Many existing prior queued projects are in service and modeled in the 2010 NMORG models. **Table 3-2** shows the 2010 NMORG and the Pre-GI-0824 modeling for these projects as recommended by the Ad Hoc Group. The projects listed in ***bold*** in **Table 3-2** are inside a 75 mile radius of the subject request POI.

This document contains confidential and proprietary information of WAPA or TranServ International, Inc. Do not copy or distribute.

Table 3-2
Existing Prior Queued Projects Included in Pre-GI-0824 Models

Bus Number	GI #	Size	2010 NMORG Off-peak	Pre-GI-0824 off-peak	2010 NMORG Peak	Pre-GI-0824 2010peak	2016 NMORG Peak	Pre-GI-0824 2016peak	Inside NDEX	Queue Date	Type
67292	GI-0208	40	0	40	0	0	0	0	YES	20-Jun-02	Wind
67293	**GI-0209**	**40**	7.5	**40**	0	**40**	0	**40**	NO	20-Jun-02	Wind
67274	GI-0316	120	0	120	0	120	120	120	NO	04-Aug-03	Gas
68378	G380	150	150	150	15	150	50	150	YES	21-Nov-03	Wind
61603	G502	50.6	40	50.6	0	0	0	0	YES	14-Mar-05	Wind
61606	GS659	49.5	49.5	49.5	0	0	0	0	YES	01-Sep-06	Wind
63645	G645&G788	99	0	99	0	99	0	99	YES	26-May-06	Coal
67157	GI-0503&GI-0720	116	115.5	115.5	0	0	0	0	YES	28-Jan-05	Wind
67295	GI-0508	49.5	49.5	49.5	0	0	0	0	YES	18-Apr-05	Wind
99616	**GI-0602**	**100**	10.5	**100**	10.5	**100**	10.5	**100**	NO	31-Mar-06	Wind
67274	GI-0608	120	0	120	0	120	120	120	NO	14-Jul-06	Gas
67255	GI-0615	49.5	49.5	49.5	0	0	0	0	YES	18-Oct-06	Wind
66881	GM0100&GM0200	160	0	160	31.5	31.5	159	159	YES	11-Sep--06	Wind
67393	G767	19.5	0	19.5	19.5	19.5	19.5	19.5	YES	20-Mar-07	Wind
67399	G132	180	180	180	180	180	180	180	YES	17-Sep-01	Wind
63087	G408	12	12	12	0	0	0	0	YES	02-Mar-04	Wind
66883	GM00300	40.5	0	40.5	7.5	7.5	40.5	40.5	YES	31-Jul-07	Wind
66700	GM00500	352	0	352	196.5	196.5	196.5	196.5	YES	3-Jan-08	Wind

DRAFT

This document contains confidential and proprietary information of WAPA or TranServ International, Inc. Do not copy or distribute.

Existing generation that is within a 75 mile radius of the subject request POI was maximized per WAPA direction as shown in **Table 3-3**.

Table 3-3
NMORG and Pre-GI-0824 Modeling of Existing Generation near POI

Bus Number	Bus Name	Id	All Pre-0824 models Pgen (MW)	NMORG 2010 Off-Peak Pgen (MW)	NMORG 2010 Peak Pgen (MW)	NMORG 2016 Peak Pgen (MW)
66542	BGBND12G 13.800	1	59	59	59	59
66542	BGBND12G 13.800	2	59	59	59	59
66543	BGBND34G 13.800	3	59	59	59	59
66543	BGBND34G 13.800	4	59	59	59	59
66544	BGBND56G 13.800	5	59	59	59	0
66544	BGBND56G 13.800	6	59	59	59	0
66545	BGBND78G 13.800	7	59	59	59	24.8
66545	BGBND78G 13.800	8	58	58	58	25
66556	OAHE2-3G 13.800	2	98	98	98	98
66556	OAHE2-3G 13.800	3	98	98	98	98
66557	OAHE4-5G 13.800	4	98	98	98	98
66557	OAHE4-5G 13.800	5	98	98	98	98
66558	OAHE6-7G 13.800	6	97	97	97	97
66558	OAHE6-7G 13.800	7	97	0	0	0
66559	OAHE 1G 13.800	1	98	98	98	107

This generation was sunk to Spirit Mound first and then if necessary the remaining generation was sunk to the system swing bus.

This document contains confidential and proprietary information of WAPA or TranServ International, Inc. Do not copy or distribute.

3.5.2. GI-0824 Study Request Model Development

This study is for Energy Resource Interconnection Service (ERIS). Since there is no transmission delivery associated with this request, only ERIS Post-GI-0824 models were developed.

The following Post-GI-0824 models were developed:

- *sp10cc.sav*: 2010 summer peak Post-GI-0824 model
- *urg-so10cc.sav*: 2010 summer off peak Post-GI-0824 model
- *sp16cc*.sav: 2016 summer peak Post-GI-0824 model

The Pre GI-0824 Models were modified to include the new generation at the proposed output level. The new generation was dispatched to the areas given in **Table 3-4** by increasing loads per WAPA direction.

Table 3-4
Project Sink

CA Name	CA
FE	202
CIN	208
LGEE	211
NIPS	217
CONS	218
AMRN	356
CILC	359
CWLP	360
SIPC	361

Cases were solved with transformer tap adjustment enabled, area interchange disabled, phase shifter adjustment enabled and switched shunt adjustment enabled.

An alternative delivery scenario was also investigated for the 2010 summer off peak analysis. The sink used for this alternative delivery scenario was WAPA's Groton and Oahe generation.

This document contains confidential and proprietary information of WAPA or TranServ International, Inc. Do not copy or distribute.

The following is a summary of Project GI-0824 parameters provided by WAPA.

A. Summary of Project GI-0824 Parameters

Unit Type/Model	= GE 1.5 - 60 Hz, Double-fed Induction Turbine
Power Factor	= .95 Lead/Lag (Qmax: 131.5 MVAR, Qmin: -131.5 MVAR)
Unit Rating	= 1.5 MW
Total No. of Units	= 267
Total Plant Capacity	= 400 MW
Collector System	= Not modeled
Delivery to POI	= 34.5/230 kV equivalent step up transformer at 448 MVA
Regulation	= Voltage Control (scheduled to 1.03 p.u. at POI bus)

This document contains confidential and proprietary information of WAPA or TranServ International, Inc. Do not copy or distribute.

3.6. Study Procedure

Impacts to the transmission system due to the new project were determined through steady state, short circuit, and constrained interface analyses. The steady state and short circuit analyses determined whether the subject request's impact on the transmission system is within applicable limits in accordance with the MAPP DRS Policies and Procedures. The constrained interface analysis results are for informational purposes only.

3.7. Contingencies Considered

The study considered only the following contingency categories in the study area as given in **Table 3-5** for the steady state analysis.

- *Category A (System Intact)*
- *Category B (Single Contingencies)*
- *Category C (Multi-terminal Contingencies)*

The study used a contingency file in the 2010 NMORG Package provided by WAPA.

The study did not perform prior outage analysis per WAPA direction.

This document contains confidential and proprietary information of WAPA or TranServ International, Inc. Do not copy or distribute.

3.8. Monitored Elements and Study Area

All study area elements as defined in **Table 3-5** were monitored.

Table 3-5
Study Area

Owner	Area	Contingency		Monitored Element	
		kV min	kV max	kV min	kV max
Xcel Energy	600	100	500	100	500
Minnesota Power	608	100	500	100	500
Great River Energy	618	100	500	100	500
Otter Tail Power (includes MPC)	626	100	345	100	345
Western Area Power Administration	652	69	345	69	345
MDU	652	69	345	69	345
Nebraska Public Power District	640	100	345	100	345

Table 3-6 shows the study area transmission system voltage criteria, as given in the MAPP Members Reliability Criteria and Study Procedures Manual and implemented in this study.

Table 3-6
Study Area Voltage Criteria

System	Base kV	System Intact Conditions		N-1 Contingency Conditions	
		Max (pu)	Min(pu)	Max (pu)	Min(pu)
Northern MAPP	110-500 kV	1.05	0.95	1.10	0.90
MP (Area 608)	110-500 kV	1.05	1.00	1.05	0.95
MP Western Division (Area 610)	115-230 kV	1.05	0.96	1.05	0.92
OTP (Area 626)	230-345 kV	1.05	0.97	1.10	0.92
	110-115 kV	1.07	0.97	1.10	0.92
NPPD (Area 640)	110-345 KV	1.05	0.95	1.10	0.90
WAPA (Area 652)	69-345 kV	1.05	1.00	1.10	0.90

This document contains confidential and proprietary information of WAPA or TranServ International, Inc. Do not copy or distribute.

4. Steady State Analysis Results

A contingency analysis was performed using models, criteria, and methodology described in Section 3. The incremental impact of the 400 MW request was evaluated by comparing flows and voltages with and without the 400 MW request. Analyses were performed using the MUST activity ACCC.

This study has identified the system intact and single-event contingency (N-1) injection constraints. All system intact and N-1 injection constraints will require facility upgrades prior to granting the subject request.

In addition to identifying the injection constraints, several limiting elements with DFs due to the subject request of at least 3% were found to load beyond their applicable ratings in the post-GI-0824 models. Throughout Section 4, these limiting elements are referred to as SAF. This study has identified the system intact and N-1 SAF. These SAF have been identified for informational purposes only and would not be considered to require mitigation prior to granting interconnection service. These SAF however may be found in a delivery study as constraints to granting transmission service when long term transmission service is requested for the GI-0824 project. The results of any future deliverability or transmission service study would depend greatly on the assumptions included in the model and the assumed project dispatch.

Please note that 2010 summer off peak was analyzed with an alternate dispatch to WAPA's Groton and Oahe generation. The alternate dispatch results were then compared to the initial dispatch results. SAF that were identified as constraints regardless of dispatch employed are considered injection constraints. SAF that were identified as constraints in only one dispatch scenario are not considered injection constraints but remain as SAF. This demonstrates that injection constraints are valid due to interconnection of the project and is not dependent on the delivery of the power. These SAF are identified in Section 4.1.3 of the report.

This document contains confidential and proprietary information of WAPA or TranServ International, Inc. Do not copy or distribute.

4.1. Contingency Analysis

The contingency analysis evaluated the incremental impact of a 400 MW transaction from the subject request POI to those loads identified in Section 3.5.2 **Table 3-4**.

4.1.1. 2010 Summer Peak Analysis

Thermal Impacts

System Intact

No 2010 summer peak system intact south and east dispatch thermal results above the SAF 3% DF criterion were found for the requested interconnection service.

N-1

The 2010 summer peak N-1 south and east dispatch contingency analysis thermal injection constraints above the SAF 3% DF criterion are given in **Table 4-1**.

This document contains confidential and proprietary information of WAPA or TranServ International, Inc. Do not copy or distribute.

Table 4-1
2010 Summer Peak
South and East Dispatch
Thermal Injection Constraints - N-1 Contingency Results

Limiting Element	Rating N/E	Owner	Pre Project		Post Project		DF	Partial Service Avail	Contingency
			MVA	%	MVA	%			
HURON 4-GI-0710 230 kV Line 1	320 / 352	WAPA	299.6	93.6 / 85.1	367.8	114.9 / 104.5	17.05%	307	FTTHOMP4-HURON 4 230 kV Line 2

This document contains confidential and proprietary information of WAPA or TranServ International, Inc. Do not copy or distribute.

The south and east dispatch injection constraint listed in **Table 4-1**, was not identified in the alternative dispatch scenario likely because GI-0710 was not modeled. If the GI-0710 project comes to fruition the subject request's impact on the south and east dispatch injection constraint listed in **Table 4-1** must be reevaluated. At this time the Huron-GI-0710 230 kV line is not a constraint to interconnection service

The 2010 summer peak south and east dispatch N-1 contingency analysis thermal results above the SAF 3% DF criterion are given in **Table 4-1A**. For repeated elements, only the contingency with the highest post project loading is listed. A complete listing of all results above the 3% DF SAF criterion is given in Appendix C.

This document contains confidential and proprietary information of WAPA or TranServ International, Inc. Do not copy or distribute.

Table 4-1A
2010 Summer Peak
South and East Dispatch
Thermal Significantly Affected Facilities - N-1 Contingency Results

Limiting Element	Rating N/E	Owner	Pre Project		Post Project		DF	Partial Service Avail	Contingency
			MVA	%	MVA	%			
FTRANDL4-UTICAJC4 230 kV Line 1	318 / 350	WAPA	312.5	98.3 / 89.3	355.2	111.7 / 101.5	10.68%	351	130 1-Multi-terminal FTTHOMP4-SIOUXFL4 230 kV line FTTHOMP4-STORLA 4 230 kV line HANLON 4-STORLA 4 230 kV line STORLA 4-STORLA 7 230/115 kV Tx
LELANDO3-LELANDO4 345/230 kV Tx #1	250 / 300	WAPA	275.7	110.3 / 91.9	302.3	120.9 / 100.8	6.65%	365	LELANDO3-LELANDO4 345/230 kV Tx #2
STORLA 4-STORLA 7 230-115 kV Tx #1	100 / 125	WAPA	127.3	127.3 / 101.8	142.4	142.4 / 113.9	3.78%	0	HANLON 4-SIOUXFL4 230 kV Line 1
STORLA 4-STORLA 7 230-115 kV Tx #1	100 / 125	WAPA	140.4	140.4 / 112.3	155.4	155.4 / 124.3	3.75%	0	HANLON 4-STORLA 4 230 kV Line 1
WH SWAN7-FTRANDL7 115 kV Line 1	120 / 132	WAPA	125.3	104.4 / 94.9	138.6	115.5 / 105	3.33%	202	160 1 - multi-circuit/tower FTRANDL4 - SIOUXCY4 230 kV line FTRANDL4 - UTICAJC4 230 kV line
WH SWAN7-TYNDALL7 115 kV Line 1	120 / 132	WAPA	122.6	102.2 / 92.9	135.7	113.1 / 102.8	3.28%	287	160 1 - multi-circuit/tower FTRANDL4 - SIOUXCY4 230 kV line FTRANDL4 - UTICAJC4 230 kV line

This document contains confidential and proprietary information of WAPA or TranServ International, Inc. Do not copy or distribute.

The SAF listed in **Table 4-1A** were reviewed by WAPA and the ad hoc study group and determined that these facilities are remote from the local area and POI of the subject request. Therefore, these facilities are listed as potential delivery constraints and are for informational purposes only. However, these SAF could be found in a delivery study to be constraints if long term firm transmission service is requested for the GI-0824 generating facility.

Voltage Impacts

System Intact

Table 4-2 lists system intact south and east dispatch SAF voltage results. A complete listing of all voltage SAF criterion results is given in Appendix C.

Table 4-2
2010 Summer Peak
South and East Dispatch
Voltage Significantly Affected Facilities – System Intact Results

BUS/NAME		KV	Owner	Pre Project	Post Project	Delta Volt %	Contingency
64806	E.COL. 4	230	NPPD	0.9458	0.9237	-2.210%	System Intact
65022	KELLY 7	115	NPPD	0.9626	0.9406	-2.200%	System Intact
64783	COLMBUS4	230	NPPD	0.9485	0.9266	-2.190%	System Intact
64780	COLMB.W4	230	NPPD	0.9488	0.9276	-2.120%	System Intact
64859	HOSKINS4	230	NPPD	0.9678	0.9475	-2.030%	System Intact
66463	WH SWAN7	115	WAPA	1.0092	0.9924	-1.680%	System Intact
66510	FTRANDL7	115	WAPA	1.0093	0.9926	-1.670%	System Intact
66832	KYPMP 22	115	WAPA	0.9907	0.9743	-1.640%	System Intact
66901	LETCHER7	115	WAPA	0.9972	0.981	-1.620%	System Intact
66900	LETCHER4	230	WAPA	0.9998	0.9837	-1.610%	System Intact
66277	LAKE PLATTE8	69	WAPA	1.0151	0.9996	-1.550%	System Intact
66526	UTICAJC4	230	WAPA	1.007	0.9919	-1.510%	System Intact
66525	TYNDALL7	115	WAPA	1.0016	0.9869	-1.470%	System Intact
66286	TYNDALL8	69	WAPA	1.0071	0.9926	-1.450%	System Intact
66501	ARMOUR 7	115	WAPA	1.0069	0.9928	-1.410%	System Intact
66249	ARMOUR 8	69	WAPA	0.9998	0.9858	-1.400%	System Intact
66833	KYPMPS23	115	WAPA	1.0041	0.9912	-1.290%	System Intact
66902	UTICAJC7	115	WAPA	1.0119	0.9991	-1.280%	System Intact
67409	MENNOJT7	115	WAPA	1.0108	0.9985	-1.230%	System Intact
67406	TRIPP 7	115	WAPA	1.0057	0.9941	-1.160%	System Intact
66278	HANLON18	69	WAPA	0.9753	0.9641	-1.120%	System Intact
66279	HANLON28	69	WAPA	0.9757	0.9646	-1.110%	System Intact
66513	HANLON 4	230	WAPA	0.9934	0.9823	-1.110%	System Intact
66536	RASMUSN4	230	WAPA	1.0068	0.9959	-1.090%	System Intact
66475	BONESTL7	115	WAPA	1.0075	0.9967	-1.080%	System Intact
66399	VFODNES8	69	WAPA	0.9779	0.9676	-1.030%	System Intact
66398	VFODNES4	230	WAPA	0.9995	0.9894	-1.010%	System Intact

This document contains confidential and proprietary information of WAPA or TranServ International, Inc. Do not copy or distribute.

N-1

Table 4-3 lists N-1 south and east dispatch contingency SAF voltage results.

Table 4-3
2010 Summer Peak
South and East Dispatch
Voltage Significantly Affected Facilities – N-1 Contingency Results

BUS/NAME		KV	Owner	Pre Project	Post Project	Delta Volt %	Contingency
64806	E.COL. 4	230	NPPD	0.9134	0.8913	-2.210%	160 1 - multi-circuit/tower FTRANDL4 - SIOUXCY4 230 kV line FTRANDL4 - UTICAJC4 230 kV line
64783	COLMBUS4	230	NPPD	0.916	0.8933	-2.270%	160 1 - multi-circuit/tower FTRANDL4 - SIOUXCY4 230 kV line FTRANDL4 - UTICAJC4 230 kV line
64780	COLMB.W4	230	NPPD	0.9177	0.8954	-2.230%	160 1 - multi-circuit/tower FTRANDL4 - SIOUXCY4 230 kV line FTRANDL4 - UTICAJC4 230 kV line

The south and east dispatch voltage SAF listed in **Tables 4-2** and **Table 4-3** were reviewed by WAPA and the ad hoc study group and were determined to be remote from the local area and POI of the subject request. Therefore, no voltage injection constraints were identified that meet the WAPA feasibility study criteria for the requested interconnection service.

However, these SAF could be found in a transmission service study to be constraints if long term firm transmission service is requested for the GI-0824 generating facility.

This document contains confidential and proprietary information of WAPA or TranServ International, Inc. Do not copy or distribute.

4.1.2. 2010 Summer Off-Peak Analysis

Thermal Impacts

System Intact

No 2010 summer off peak system intact south and east dispatch thermal injection constraints were found for the requested interconnection service.

The 2010 summer off peak system intact south and east dispatch thermal results above the SAF 5% DF criterion are given in **Table 4-4**.

Table 4-4
2010 Summer Off Peak
South and East Dispatch
Thermal Significantly Affected Facilities – System Intact Results

Limiting Element	Rating N/E	Owner	Pre Project		Post Project		DF	Partial Service Avail	Contingency
			MVA	%	MVA	%			
ROSEAUN2-DORSEY 2 500 kV line	1732	XEL / MH	1907.4	110.1	1937.5	111.9	7.52%	0	System Intact
ROSEAUN2 - ROSEAUS2 500 kV line	1732	XEL	1843	106.4	1873.1	108.1	7.52%	0	System Intact
MNVLTAP4 – GRANIT4 230 kV line	388	XEL / WAPA	368.6	95	396.7	102.3	7.02%	176	System Intact

The south and east dispatch SAF listed in **Table 4-4** were reviewed by WAPA and the ad hoc study group and were determined to be remote from the local area of the subject request. However, these SAF could be found in a transmission service study to be constraints if long term firm transmission service is requested for the GI-0824 generating facility.

N-1

The 2010 summer off-peak N-1 south and east dispatch contingency analysis thermal injection constraints above the SAF 3% DF criterion are given in **Table 4-5**.

This document contains confidential and proprietary information of WAPA or TranServ International, Inc. Do not copy or distribute.

Table 4-5
2010 Summer Off Peak
South and East Dispatch
Thermal Injection Constraints - N-1 Contingency Results

Limiting Element	Rating N/E	Owner	Pre Project		Post Project		DF	Partial Service Avail	Contingency
			MVA	%	MVA	%			
FTTHOMP4-FTRANDL4 230 kV Line 1	320 / 352	WAPA	327.8	102.4 / 93.1	384.8	120.3 / 109.3	14.25%	170	FTTHOMP4-LAKPLAT4 230 kV Line 1
FTTHOMP4-LAKE PLATTE4 230 kV Line 1	318 / 351	WAPA	325.5	102.4 / 92.7	382.4	120.2 / 108.9	14.23%	179	FTTHOMP4-FTRANDL4 230 kV Line 1
FTRANDL4-LAKE PLATTE4 230 kV Line 1	318 / 351	WAPA	317.1	99.7 / 90.3	373.9	117.6 / 106.5	14.20%	239	FTTHOMP4-FTRANDL4 230 kV Line 1
HANLON 4-SIOUXFL4 230 kV Line 1	320 / 352	WAPA	340.9	106.5 / 96.8	391.4	122.3 / 111.2	12.63%	88	160 1 - multi-circuit/tower FTRANDL4 - SIOUXCY4 230 kV line FTRANDL4 - UTICAJC4 230 kV line

This document contains confidential and proprietary information of WAPA or TranServ International, Inc. Do not copy or distribute.

The south and east dispatch injection constraints listed in **Table 4-5** were also identified in the alternative dispatch scenario. However the loading identified in the alternative dispatch scenario was found to be lower than the loading identified in the south and east dispatch scenario. Thus although these constraints must be ameliorated, the loading level to which they must be ameliorated is given in Section 4.1.3 of this report.

The 2010 summer off peak N-1 contingency analysis thermal results above the SAF 3% DF criterion are given in **Table 4-5A**. For repeated elements, only the contingency resulting in the highest post project loading is listed. A complete listing of all results above the SAF 3% DF criterion are shown in Appendix C

This document contains confidential and proprietary information of WAPA or TranServ International, Inc. Do not copy or distribute.

Table 4-5A
2010 Summer Off Peak
South and East Dispatch
Thermal Significantly Affected Facilities – Single Contingency Results

Limiting Element	Rating N/E	Owner	Pre Project		Post Project		DF	Partial Service Avail	Contingency
			MVA	%	MVA	%			
STORLA 4-WESNGTN4 230 kV Line 1	480 / 520	WAPA	453.8	94.5 / 87.3	523.4	109.1 / 100.7	17.40%	380	108 1
SPLT RK4-SIOUXFL4 230 kV Line 1	386 / 425	XEL / WAPA	377.2	97.7 / 88.8	439	113.7 / 103.3	15.45%	309	SPLTRTA3-WHITE 3 345 kV Line 1
MCCOOL 3-GR ISLD3 345 kV Line 1	717 / 789	NPPD	780.8	108.9 / 99	841	117.3 / 106.6	15.05%	54	MINGO 7-REDWILO3 345 kV Line 1
HURON 4-WATERTN4 230 kV Line 2	318 / 350	WAPA	306.6	96.4 / 87.6	363.9	114.4 / 104	14.33%	303	HURON 4-CARPNTR4 230 kV Line 1
HURON 4-CARPNTR4 230 kV Line 1	318 / 350	WAPA	310.9	97.8 / 88.8	368.1	115.8 / 105.2	14.30%	273	HURON 4-WATERTN4 230 kV Line 2
WATERTN4-CARPNTR4 230 kV Line 1	318 / 350	WAPA	301.1	94.7 / 86	358.3	112.7 / 102.4	14.30%	342	HURON 4-WATERTN4 230 kV Line 2
FTRANDL4-UTICAJC4 230 kV Line 1	318 / 350	WAPA	365.7	115 / 104.5	416.7	131 / 119.1	12.75%	0	130 1
SPLTRTA3-WHITE 3 345 kV Line 1	720 / 792	XEL / WAPA	773.2	107.4 / 97.6	823.4	114.4 / 104	12.55%	150	110 1
GOOSELK7-MNPIP 7 115 kV Line 1	203	XEL	233.6	115.1	276.8	136.4	10.80%	0	022 1
COLMBUS4-FTRANDL4 230 kV Line 1	320 / 352	NPPD / WAPA	338.7	105.8 / 96.2	380.6	118.9 / 108.1	10.48%	127	160 1
ROSEAUN2-DORSEY 2 500 kV Line 1	1732 / 1905	XEL / MH	2055.9	118.7 / 107.9	2095.3	121 / 110	9.85%	0	ROSEAU 4-RICHER 4 230 kV Line 1
ROSEAUN2-ROSEAUS2 500 kV Line 1	1732 / 1905	XEL	1987.1	114.7 / 104.3	2025.8	117 / 106.3	9.68%	0	ROSEAU 4-RICHER 4 230 kV Line 1
CHIS CO3-CHIS D1Y 345-110 kV Tx #10	1203 / 1564	XEL	1614.4	134.2 / 103.2	1651.7	137.3 / 105.6	9.32%	0	CHIS CO2-CHIS D2Y 500-110 kV Tx #9
CHIS CO3-CHIS D2Y 345-110 kV Tx #9	1203 / 1564	XEL	1614.4	134.2 / 103.2	1651.7	137.3 / 105.6	9.32%	0	CHIS CO2-CHIS D1Y 500-110 kV Tx #10
CHIS CO2-CHIS D1Y 500-110 kV Tx #10	1203 / 1564	XEL	1620	134.7 / 103.6	1657	137.7 / 105.9	9.25%	0	CHIS CO2-CHIS D2Y 500-110 kV Tx #9
CHIS CO2-CHIS D2Y 500-110 kV Tx #9	1200 / 1560	XEL	1620	135 / 103.8	1657	138.1 / 106.2	9.25%	0	CHIS CO2-CHIS D1Y 500-110 kV Tx #10
CHIS CO3-KOLMNLK3 345 kV Line 1	1165 / 1281	XEL	1287.7	110.5 / 100.5	1322.6	113.5 / 103.2	8.72%	0	AS KING3-CHIS CO3 345 kV Line 1
MNVLTAP4-GRANITF4 230 kV Line 1	388 / 427	XEL / WAPA	440	113.4 / 103	474.3	122.2 / 111.1	8.58%	0	500
AS KING3-CHIS CO3 345 kV Line 1	1166 / 1195	XEL	1291	110.7 / 108	1324.7	113.6 / 110.9	8.43%	0	CHIS CO3-KOLMNLK3 345 kV Line 1
MCLEOD 4-PANTHER4 230 kV Line 1	319	XEL	340.1	106.6	370.3	116.1	7.55%	0	ALTW-26
ST JOE 3-COOPER 3 345 kV Line 1	956	MIPU / NPPD	972	101.7	998.8	104.5	6.70%	0	COOPER 3-7FAIRPT 345 kV Line 1
WILLMAR4-GRANITF4 230 kV Line 1	240	GRE / WAPA	291.7	121.5	315.4	131.4	5.93%	0	795
SHEYNNE4-AUDUBON4 230 kV Line 1	254 / 280	OTP	409.2	161.1 / 146.1	432.2	170.1 / 154.4	5.75%	0	610 1
WAHPETN4-FERGSFL4 230 kV Line 1	320 / 352	OTP	356.3	111.3 / 101.2	378.8	118.4 / 107.6	5.63%	0	SHEYNNE4-AUDUBON4 230 kV Line 1
LETCHER7-MITCHEL7 115 kV Line 1	145	WAPA	128.9	88.7	148.8	102.3	4.98%	324	SIOUXFL4-LETCHER4 230 kV Line 1
GAVINS 7-YKNTJCT7 115 kV Line 1	120 / 128	WAPA	124.1	103.4 / 97	141.5	117.9 / 110.5	4.35%	90	160 2
LETCHER4-LETCHER7 230-115 kV Tx #1	100 / 125	WAPA	141	141 / 112.8	158	158 / 126.4	4.25%	0	SIOUXFL4-LETCHER4 230 kV Line 1

This document contains confidential and proprietary information of WAPA or TranServ International, Inc. Do not copy or distribute.

Limiting Element	Rating N/E	Owner	Pre Project		Post Project		DF	Partial Service Avail	Contingency
			MVA	%	MVA	%			
STORLA 4-STORLA 7 230-115 kV Tx #1	100 / 125	WAPA	136.1	136.1 / 108.9	153	153 / 122.4	4.23%	0	HANLON 4-STORLA 4 230 kV Line 1
ARMOUR 7-MTVERN 7 115 kV Line 1	80 / 88	WAPA	86.9	108.6 / 98.8	103.4	129.3 / 117.5	4.13%	27	108 1
MAPLE R4-MAPLE R3 230-345 kV Tx #1	336 / 420	OTP	443.2	131.9 / 105.5	459.2	136.7 / 109.3	4.00%	0	MAPLER2Y-MAPLE R4 345-230 kV Tx #1
MAPLE R4-MAPLE R3 230-345 kV Tx #2	336 / 420	OTP	443.2	131.9 / 105.5	459.2	136.7 / 109.3	4.00%	0	MAPLER1Y-MAPLE R4 345-230 kV Tx #1
WH SWAN7-FTRANDL7 115 kV Line 1	120 / 128	WAPA	133.6	111.3 / 104.4	149.4	124.5 / 116.7	3.95%	0	160 1
WH SWAN7-TYNDALL7 115 kV Line 1	120 / 128	WAPA	132.2	110.2 / 103.3	147.9	123.2 / 115.5	3.93%	0	160 1
OGALALA4-SIDNEY 4 230 kV Line 1	320 / 352	NPPD	481	150.3 / 136.6	496.4	155.1 / 141	3.85%	0	KEYSTON3-SIDNEY 3 345 kV Line 1
MINVALY7-MINVALT4 115-230 kV Tx #6	187 / 215	XEL	216.2	115.6 / 100.6	231.4	123.7 / 107.6	3.80%	0	MNVLTAP4-GRANITF4 230 kV Line 1
TYNDALL7-YKNTJCT7 115 kV Line 1	120 / 128	WAPA	115.6	96.3 / 90.3	130.4	108.6 / 101.9	3.70%	335	160 1
SPENCER7-FTRANDL7 115 kV Line 1	120 / 132	NPPD / WAPA	126.1	105.1 / 95.5	139.9	116.6 / 106	3.45%	171	160 1
ONEILL 7-SPENCER7 115 kV Line 1	120 / 132	NPPD	121.5	101.2 / 92	135	112.5 / 102.3	3.38%	311	160 1
GRANITF4-MORRIS 4 230 kV Line 1	239 / 263	WAPA	258.9	108.3 / 98.4	272	113.8 / 103.4	3.28%	125	110 2
FRONTIER-MAPLE R4 230 kV Line 1	265 / 292	OTP	331.9	125.3 / 113.7	344.7	130.1 / 118	3.20%	0	610 2
LKYNKTN7-BUFFRID7 115 kV Line 1	141 / 156	XEL	215.4	152.8 / 138.1	228.1	161.8 / 146.2	3.18%	0	110 1
WAHPETN4-FRONTIER 230 kV Line 1	265 / 292	OTP	315.2	118.9 / 107.9	327.3	123.5 / 112.1	3.03%	0	SHEYNNE4-AUDUBON4 230 kV Line 1

This document contains confidential and proprietary information of WAPA or TranServ International, Inc. Do not copy or distribute.

The south and east dispatch SAF listed in **Table 4-5A** were reviewed by WAPA and the ad hoc study group and were determined to be remote from the local area and POI of the subject request. Therefore, these SAF are listed for informational purposes only and could be found in a delivery study to be constraints if long term firm transmission service is requested for the GI-0824 generating facility.

Voltage Impacts

System Intact

Table 4-6 lists the 2010 summer off peak south and east dispatch system intact SAF voltage results.

Table 4-6
2010 Summer Off Peak
South and East Dispatch
Voltage Significantly Affected Facilities – System Intact Results

BUS/NAME		KV	Owner	Pre Project	Post Project	Delta Volt %	Contingency
66509	FTRANDL4	230	WAPA	1.0065	0.9808	-2.570%	System Intact
66525	TYNDALL7	115	WAPA	1.0002	0.9767	-2.350%	System Intact
66286	TYNDALL8	69	WAPA	1.003	0.9797	-2.330%	System Intact
66463	WH SWAN7	115	WAPA	0.994	0.9714	-2.260%	System Intact
66510	FTRANDL7	115	WAPA	0.9941	0.9715	-2.260%	System Intact
66526	UTICAJC4	230	WAPA	0.9962	0.9737	-2.250%	System Intact
67406	TRIPP 7	115	WAPA	1.0117	0.9893	-2.240%	System Intact
66833	KYPMPS23	115	WAPA	1.0004	0.9781	-2.230%	System Intact
66902	UTICAJC7	115	WAPA	1.0083	0.9862	-2.210%	System Intact
67409	MENNOJT7	115	WAPA	1.0101	0.9882	-2.190%	System Intact
66900	LETCHER4	230	WAPA	0.99	0.9682	-2.180%	System Intact
66832	KYPMP 22	115	WAPA	0.9977	0.977	-2.070%	System Intact
66901	LETCHER7	115	WAPA	1.0042	0.9836	-2.060%	System Intact
66278	HANLON18	69	WAPA	0.9592	0.9389	-2.030%	System Intact
66249	ARMOUR 8	69	WAPA	0.9858	0.9655	-2.030%	System Intact
66501	ARMOUR 7	115	WAPA	0.9943	0.974	-2.030%	System Intact
66279	HANLON28	69	WAPA	0.967	0.9469	-2.010%	System Intact
66513	HANLON 4	230	WAPA	0.9825	0.9624	-2.010%	System Intact
67407	YKNTJCT7	115	WAPA	1.02	0.9999	-2.010%	System Intact
67405	MITCHEL7	115	WAPA	1.0116	0.9918	-1.980%	System Intact
67410	MITCLNW7	115	WAPA	1.0114	0.9918	-1.960%	System Intact
67121	SPIRITM7	115	WAPA	1.0131	0.9943	-1.880%	System Intact
66517	MANNING7	115	WAPA	1.0104	0.9917	-1.870%	System Intact
66516	LAKE PLATTE4	230	WAPA	1.0079	0.9897	-1.820%	System Intact
66277	LAKE PLATTE8	69	WAPA	0.9993	0.9812	-1.810%	System Intact
66253	BERSFRDT	115	WAPA	0.9757	0.9577	-1.800%	System Intact
66254	BERSFRD8	69	WAPA	0.9757	0.9577	-1.800%	System Intact
66399	VFODNES8	69	WAPA	0.9874	0.9694	-1.800%	System Intact

This document contains confidential and proprietary information of WAPA or TranServ International, Inc. Do not copy or distribute.

BUS/NAME		KV	Owner	Pre Project	Post Project	Delta Volt %	Contingency
66000	VFODNES7	115	WAPA	0.995	0.9772	-1.780%	System Intact
66502	BERSFRD7	115	WAPA	0.9929	0.9751	-1.780%	System Intact
67985	SHINDLR7	115	WAPA	0.996	0.9782	-1.780%	System Intact
67986	HARSBRG7	115	WAPA	0.996	0.9782	-1.780%	System Intact
66001	VFODNS1T	230	WAPA	0.9952	0.9774	-1.780%	System Intact
66398	VFODNES4	230	WAPA	0.9973	0.9795	-1.780%	System Intact
66287	RASMUSN8	69	WAPA	1.01	0.9938	-1.620%	System Intact
66536	RASMUSN4	230	WAPA	0.9971	0.9813	-1.580%	System Intact
66251	MTVERNS8	69	WAPA	0.9802	0.9644	-1.580%	System Intact
66252	MTVERNN8	69	WAPA	0.9831	0.9673	-1.580%	System Intact
66518	MTVERN 7	115	WAPA	0.9873	0.9715	-1.580%	System Intact
66523	SIOUXFL4	230	WAPA	0.9969	0.9815	-1.540%	System Intact
66235	SIOUXFL8	69	WAPA	0.9869	0.9718	-1.510%	System Intact
66524	SIOUXFL7	115	WAPA	0.9946	0.9795	-1.510%	System Intact
67980	WBRANDN7	115	WAPA	0.9947	0.9796	-1.510%	System Intact
67981	CORSON 7	115	WAPA	0.9948	0.9797	-1.510%	System Intact
67982	BRANDON7	115	WAPA	0.9948	0.9797	-1.510%	System Intact
67983	ROWENA 7	115	WAPA	0.995	0.9799	-1.510%	System Intact
67984	SPLROCK7	115	WAPA	0.995	0.9799	-1.510%	System Intact
66231	SIOUXF1T	230	WAPA	0.9953	0.9803	-1.500%	System Intact
66234	SIOUXF2T	230	WAPA	0.9952	0.9802	-1.500%	System Intact
66245	CLEVELD8	69	WAPA	0.9801	0.9652	-1.490%	System Intact
66475	BONESTL7	115	WAPA	1.0015	0.9867	-1.480%	System Intact
66571	GR ISLD3	345	NPPD	0.9473	0.9325	-1.480%	System Intact
66588	CLEVELD4	230	WAPA	0.9904	0.9756	-1.480%	System Intact
64806	E.COL. 4	230	NPPD	0.962	0.9473	-1.470%	System Intact
66578	PAHOJA 4	230	WAPA	0.992	0.9774	-1.460%	System Intact
63054	PANTHER4	230	XEL	0.9595	0.9453	-1.420%	System Intact
67122	STORLA 4	230	WAPA	1.0082	0.9944	-1.380%	System Intact
67123	STORLA 7	115	WAPA	0.9938	0.9807	-1.310%	System Intact
64896	MCCOOL 3	345	NPPD	0.9578	0.9451	-1.270%	System Intact
62425	WILLMAR7	115	GRE	0.9617	0.9491	-1.260%	System Intact
66562	EAGLE 4	230	WAPA	0.9932	0.9807	-1.250%	System Intact
65025	E.COL. Y	230	NPPD	0.934	0.9217	-1.230%	System Intact
60162	WAKEFLD7	115	XEL	0.9592	0.9471	-1.210%	System Intact
64839	GR ISLD4	230	NPPD	0.9416	0.9298	-1.180%	System Intact
66550	GRANITF4	230	WAPA	0.9944	0.9826	-1.180%	System Intact
66528	WOONSKT7	115	WAPA	0.9989	0.9872	-1.170%	System Intact
66226	FLANDRUT	115	WAPA	1.0023	0.9907	-1.160%	System Intact
66229	FLANDRU8	69	WAPA	1.0021	0.9905	-1.160%	System Intact
66505	FLANDRU7	115	WAPA	1.0104	0.9988	-1.160%	System Intact
62006	KERKHO 7	115	OTP	0.9686	0.9571	-1.150%	System Intact
62980	MCLEOD 4	230	XEL	0.9612	0.9497	-1.150%	System Intact
66298	GRANITF8	69	WAPA	0.9855	0.9742	-1.130%	System Intact
66313	GR ISL1T	345	NPPD	0.9416	0.9303	-1.130%	System Intact
66315	GR ISL2T	345	NPPD	0.9416	0.9303	-1.130%	System Intact
66579	EAGLE 8	69	WAPA	0.9938	0.9826	-1.120%	System Intact
66296	GRANITFT	230	WAPA	1.0061	0.995	-1.110%	System Intact
66466	GRANTF2T	230	WAPA	1.0061	0.995	-1.110%	System Intact

This document contains confidential and proprietary information of WAPA or TranServ International, Inc. Do not copy or distribute.

BUS/NAME		KV	Owner	Pre Project	Post Project	Delta Volt %	Contingency
66551	GRANITF7	115	WAPA	1.0045	0.9934	-1.110%	System Intact
66498	J1CENTR8	69	WAPA	0.9886	0.9779	-1.070%	System Intact
67124	J1ROCKV8	69	WAPA	0.9877	0.9771	-1.060%	System Intact
67129	L3EAGLE8	69	WAPA	0.9863	0.9761	-1.020%	System Intact
66303	SIOUXC1T	345	WAPA	1.0028	0.9928	-1.000%	System Intact

The south and east dispatch SAF listed in **Table 4-6**, were not identified in the alternative dispatch scenario provided in Section 4.1.3. Because they were not repeated in both scenarios they are not constraints to granting the subject request. However they remain as SAF and could be found in a delivery study to be constraints if long term firm transmission service is requested for the GI-0824 generating facility.

N-1

Table 4-7 shows the 2010 summer off peak south and east dispatch N-1 SAF voltage results. For repeated elements, only the contingency with the lowest post-project voltage is listed. A complete listing of all voltage SAF criterion results is given in Appendix C.

Table 4-7
2010 Summer Off Peak
South and East Dispatch
Voltage Significantly Affected Facilities – Single Contingency Results

BUS/NAME		KV	Owner	Pre Project	Post Project	Delta Volt %	Contingency
66278	HANLON18	69	WAPA	0.9253	0.8327	-9.260%	FTTHOMP3-GR ISLD3 345 kV Line 1
66279	HANLON28	69	WAPA	0.9335	0.842	-9.150%	FTTHOMP3-GR ISLD3 345 kV Line 1
66513	HANLON 4	230	WAPA	0.9491	0.8582	-9.090%	FTTHOMP3-GR ISLD3 345 kV Line 1
66832	KYPMP 22	115	WAPA	0.964	0.8752	-8.880%	FTTHOMP3-GR ISLD3 345 kV Line 1
66900	LETCHER4	230	WAPA	0.9553	0.8669	-8.840%	FTTHOMP3-GR ISLD3 345 kV Line 1
66901	LETCHER7	115	WAPA	0.9708	0.8831	-8.770%	FTTHOMP3-GR ISLD3 345 kV Line 1
67405	MITCHEL7	115	WAPA	0.9791	0.8926	-8.650%	FTTHOMP3-GR ISLD3 345 kV Line 1
66509	FTRANDL4	230	WAPA	0.964	0.8777	-8.630%	FTTHOMP3-GR ISLD3 345 kV Line 1
67410	MITCLNW7	115	WAPA	0.979	0.8929	-8.610%	FTTHOMP3-GR ISLD3 345 kV Line 1
67406	TRIPP 7	115	WAPA	0.9769	0.8929	-8.400%	FTTHOMP3-GR ISLD3 345 kV Line 1
66249	ARMOUR 8	69	WAPA	0.9512	0.8711	-8.010%	FTTHOMP3-GR ISLD3 345 kV Line 1
66501	ARMOUR 7	115	WAPA	0.9596	0.8796	-8.000%	FTTHOMP3-GR ISLD3 345 kV Line 1
64965	SPENCER7	115	NPPD	0.9462	0.8664	-7.980%	FTTHOMP3-GR ISLD3 345 kV Line 1
66526	UTICAJC4	230	WAPA	0.9612	0.8814	-7.980%	FTTHOMP3-GR ISLD3 345 kV Line 1
66833	KYPMPS23	115	WAPA	0.9671	0.8873	-7.980%	FTTHOMP3-GR ISLD3 345 kV Line 1
66399	VFODNES8	69	WAPA	0.9579	0.8787	-7.920%	FTTHOMP3-GR ISLD3 345 kV Line 1
66525	TYNDALL7	115	WAPA	0.9658	0.8866	-7.920%	FTTHOMP3-GR ISLD3 345 kV Line 1
66902	UTICAJC7	115	WAPA	0.9754	0.8968	-7.860%	FTTHOMP3-GR ISLD3 345 kV Line 1
66286	TYNDALL8	69	WAPA	0.969	0.8906	-7.840%	FTTHOMP3-GR ISLD3 345 kV Line 1
67409	MENNOJT7	115	WAPA	0.9776	0.8993	-7.830%	FTTHOMP3-GR ISLD3 345 kV Line 1

This document contains confidential and proprietary information of WAPA or TranServ International, Inc. Do not copy or distribute.

BUS/NAME		KV	Owner	Pre Project	Post Project	Delta Volt %	Contingency
66463	WH SWAN7	115	WAPA	0.957	0.8788	-7.820%	FTTHOMP3-GR ISLD3 345 kV Line 1
66510	FTRANDL7	115	WAPA	0.9571	0.8789	-7.820%	FTTHOMP3-GR ISLD3 345 kV Line 1
66398	VFODNES4	230	WAPA	0.9681	0.8901	-7.800%	FTTHOMP3-GR ISLD3 345 kV Line 1
66001	VFODNS1T	230	WAPA	0.9661	0.8882	-7.790%	FTTHOMP3-GR ISLD3 345 kV Line 1
66251	MTVERNS8	69	WAPA	0.9516	0.8737	-7.790%	FTTHOMP3-GR ISLD3 345 kV Line 1
66518	MTVERN 7	115	WAPA	0.9587	0.8808	-7.790%	FTTHOMP3-GR ISLD3 345 kV Line 1
67985	SHINDLR7	115	WAPA	0.9669	0.889	-7.790%	FTTHOMP3-GR ISLD3 345 kV Line 1
67986	HARSBRG7	115	WAPA	0.9668	0.8889	-7.790%	FTTHOMP3-GR ISLD3 345 kV Line 1
66000	VFODNES7	115	WAPA	0.9659	0.8881	-7.780%	FTTHOMP3-GR ISLD3 345 kV Line 1
66252	MTVERNN8	69	WAPA	0.9546	0.877	-7.760%	FTTHOMP3-GR ISLD3 345 kV Line 1
66523	SIOUXFL4	230	WAPA	0.9707	0.8943	-7.640%	FTTHOMP3-GR ISLD3 345 kV Line 1
66253	BERSFRDT	115	WAPA	0.9476	0.8715	-7.610%	FTTHOMP3-GR ISLD3 345 kV Line 1
66254	BERSFRD8	69	WAPA	0.9476	0.8715	-7.610%	FTTHOMP3-GR ISLD3 345 kV Line 1
60127	SPLT RK4	230	XEL	0.9724	0.8967	-7.570%	FTTHOMP3-GR ISLD3 345 kV Line 1
66235	SIOUXFL8	69	WAPA	0.9612	0.886	-7.520%	FTTHOMP3-GR ISLD3 345 kV Line 1
67983	ROWENA 7	115	WAPA	0.9693	0.8941	-7.520%	FTTHOMP3-GR ISLD3 345 kV Line 1
67984	SPLROCK7	115	WAPA	0.9693	0.8941	-7.520%	FTTHOMP3-GR ISLD3 345 kV Line 1
66524	SIOUXFL7	115	WAPA	0.9689	0.8937	-7.520%	FTTHOMP3-GR ISLD3 345 kV Line 1
67980	WBRANDN7	115	WAPA	0.969	0.8938	-7.520%	FTTHOMP3-GR ISLD3 345 kV Line 1
67981	CORSON 7	115	WAPA	0.9691	0.8939	-7.520%	FTTHOMP3-GR ISLD3 345 kV Line 1
67982	BRANDON7	115	WAPA	0.9691	0.8939	-7.520%	FTTHOMP3-GR ISLD3 345 kV Line 1
66231	SIOUXF1T	230	WAPA	0.9697	0.8946	-7.510%	FTTHOMP3-GR ISLD3 345 kV Line 1
66234	SIOUXF2T	230	WAPA	0.9696	0.8946	-7.500%	FTTHOMP3-GR ISLD3 345 kV Line 1
66502	BERSFRD7	115	WAPA	0.9651	0.8902	-7.490%	FTTHOMP3-GR ISLD3 345 kV Line 1
67123	STORLA 7	115	WAPA	0.9695	0.8949	-7.460%	FTTHOMP3-GR ISLD3 345 kV Line 1
64926	ONEILL 7	115	NPPD	0.9571	0.8847	-7.240%	FTTHOMP3-GR ISLD3 345 kV Line 1
66277	LAKE PLATTE8	69	WAPA	0.9677	0.8956	-7.210%	FTTHOMP3-GR ISLD3 345 kV Line 1
66245	CLEVELD8	69	WAPA	0.955	0.8863	-6.870%	FTTHOMP3-GR ISLD3 345 kV Line 1
64812	EMMET 7	115	NPPD	0.9609	0.8926	-6.830%	FTTHOMP3-GR ISLD3 345 kV Line 1
66588	CLEVELD4	230	WAPA	0.9656	0.8977	-6.790%	FTTHOMP3-GR ISLD3 345 kV Line 1
66578	PAHOJA 4	230	WAPA	0.9673	0.8997	-6.760%	FTTHOMP3-GR ISLD3 345 kV Line 1
64730	ATKINSN7	115	NPPD	0.9646	0.899	-6.560%	FTTHOMP3-GR ISLD3 345 kV Line 1
64749	BEVERLY7	115	NPPD	0.8501	0.8203	-2.980%	GENTLMN3-REDWILO3 345 kV Line 1
64975	STOCKVL7	115	NPPD	0.8742	0.8445	-2.970%	GENTLMN3-REDWILO3 345 kV Line 1
66571	GR ISLD3	345	NPPD	0.8972	0.8687	-2.850%	MINGO 7-REDWILO3 345 kV Line 1
64894	MCCOOK 7	115	NPPD	0.8953	0.8679	-2.740%	GENTLMN3-REDWILO3 345 kV Line 1
64944	REDWILO7	115	NPPD	0.8922	0.865	-2.720%	GENTLMN3-REDWILO3 345 kV Line 1
64839	GR ISLD4	230	NPPD	0.8961	0.8703	-2.580%	MINGO 7-REDWILO3 345 kV Line 1
66313	GR ISL1T	345	NPPD	0.8967	0.8714	-2.530%	MINGO 7-REDWILO3 345 kV Line 1
66315	GR ISL2T	345	NPPD	0.8967	0.8714	-2.530%	MINGO 7-REDWILO3 345 kV Line 1
64813	ENDERS 7	115	NPPD	0.8848	0.86	-2.480%	GENTLMN3-REDWILO3 345 kV Line 1
65028	GR.IST2Y	230	NPPD	0.8945	0.8703	-2.420%	MINGO 7-REDWILO3 345 kV Line 1
65029	GR.IST5Y	230	NPPD	0.8951	0.8709	-2.420%	MINGO 7-REDWILO3 345 kV Line 1
65035	MCCOOL Y	345	NPPD	0.9256	0.9014	-2.420%	MINGO 7-REDWILO3 345 kV Line 1
64896	MCCOOL 3	345	NPPD	0.9089	0.8848	-2.410%	MINGO 7-REDWILO3 345 kV Line 1
65041	REDWLO Y	345	NPPD	0.8198	0.7959	-2.390%	GENTLMN3-REDWILO3 345 kV Line 1
64733	AXTELL 3	345	NPPD	0.8829	0.8593	-2.360%	MINGO 7-REDWILO3 345 kV Line 1
64847	HASTING4	230	NPPD	0.8918	0.8682	-2.360%	MINGO 7-REDWILO3 345 kV Line 1
64984	SWEET W3	345	NPPD	0.8975	0.8743	-2.320%	MINGO 7-REDWILO3 345 kV Line 1

This document contains confidential and proprietary information of WAPA or TranServ International, Inc. Do not copy or distribute.

BUS/NAME		KV	Owner	Pre Project	Post Project	Delta Volt %	Contingency
67244	ATHEY 7	115	NPPD	0.9007	0.8776	-2.310%	GENTLMN3-REDWILO3 345 kV Line 1
63202	AUDUBONY	230	OTP	0.9306	0.9076	-2.300%	SHEYNNE4-AUDUBON4 230 kV Line 1
60374	FIBROMN7	115	XEL	0.9119	0.8892	-2.270%	110 2
62001	BENSON 7	115	OTP	0.9119	0.8892	-2.270%	110 2
65021	AXTELL Y	345	NPPD	0.8918	0.8691	-2.270%	MINGO 7-REDWILO3 345 kV Line 1
64933	PAULINE3	345	NPPD	0.893	0.8706	-2.240%	MINGO 7-REDWILO3 345 kV Line 1
65040	PAULIN Y	345	NPPD	0.9118	0.8895	-2.230%	MINGO 7-REDWILO3 345 kV Line 1
62027	HANCOCK7	115	OTP	0.9171	0.8949	-2.220%	110 2
62002	WALDEN 7	115	OTP	0.9202	0.8984	-2.180%	110 2
67245	CRETEHE7	115	NPPD	0.9182	0.8969	-2.130%	GENTLMN3-REDWILO3 345 kV Line 1
63218	MOROTP 7	115	OTP	0.9272	0.9061	-2.110%	110 2
64948	RIVERDL4	230	NPPD	0.8812	0.8601	-2.110%	MINGO 7-REDWILO3 345 kV Line 1
65042	RIVRDL Y	230	NPPD	0.8906	0.87	-2.060%	MINGO 7-REDWILO3 345 kV Line 1
65030	HASTNG Y	230	NPPD	0.911	0.8905	-2.050%	MINGO 7-REDWILO3 345 kV Line 1
64943	REDWILO3	345	NPPD	0.8517	0.8326	-1.910%	GENTLMN3-REDWILO3 345 kV Line 1
62420	RDO TAP7	115	MP	0.9526	0.9342	-1.840%	FTTHOMP3-GR ISLD3 345 kV Line 1
62005	KERKHOT7	115	XEL	0.9028	0.8848	-1.800%	WILLMAR4-GRANITF4 230 kV Line 1
62425	WILLMAR7	115	GRE	0.8882	0.8709	-1.730%	WILLMAR4-GRANITF4 230 kV Line 1
64759	C.CREEK4	230	NPPD	0.8984	0.8812	-1.720%	MINGO 7-REDWILO3 345 kV Line 1
62006	KERKHO 7	115	OTP	0.912	0.8955	-1.650%	WILLMAR4-GRANITF4 230 kV Line 1
64765	CANADAY4	230	NPPD	0.9019	0.886	-1.590%	MINGO 7-REDWILO3 345 kV Line 1
60385	W NEWU 7	115	XEL	0.9103	0.8947	-1.560%	ALTW-26
61641	HUBBARD7	115	MP	0.9499	0.9363	-1.360%	110 2
62415	RDO 7	115	MP	0.9476	0.934	-1.360%	110 2
61616	HILLTOP4	230	MP	0.9462	0.9339	-1.230%	015 2
61614	90L TAP4	230	MP	0.9461	0.9339	-1.220%	015 2
61615	ARROWHD4	230	MP	0.9456	0.9334	-1.220%	015 2
61681	LSPI 7	115	MP	0.953	0.9409	-1.210%	015 2
61576	HILTPJCT	115	MP	0.9535	0.9415	-1.200%	015 2
61672	HILLTOP7	115	MP	0.9518	0.9398	-1.200%	015 2
61676	HIBBARD7	115	MP	0.9532	0.9412	-1.200%	015 2
61686	15TH AV7	115	MP	0.9481	0.9361	-1.200%	015 2
61680	WNTR ST7	115	MP	0.9552	0.9433	-1.190%	015 2
61679	GARY 7	115	MP	0.9542	0.9424	-1.180%	015 2
61687	MIDWAY 7	115	MP	0.9505	0.9388	-1.170%	015 2
61673	ARROWHD7	115	MP	0.9508	0.9391	-1.170%	015 2
61554	AWHD1JCT	115	MP	0.9526	0.9411	-1.150%	015 2
61556	AWHD2JCT	115	MP	0.9527	0.9412	-1.150%	015 2
63197	CASS LKY	115	OTP	0.9261	0.9149	-1.120%	NARY 7-CPROLLA7 115 kV Line 1
65025	E.COL. Y	230	NPPD	0.8933	0.8823	-1.100%	COLMBUS4-E.COL. 4 230 kV Line 1
61674	HANESRD7	115	MP	0.9479	0.937	-1.090%	015 2
64806	E.COL. 4	230	NPPD	0.871	0.8602	-1.080%	COLMBUS4-E.COL. 4 230 kV Line 1
63247	CASS LK7	115	OTP	0.917	0.9062	-1.080%	NARY 7-CPROLLA7 115 kV Line 1
63248	CASS N 7	115	OTP	0.9167	0.9059	-1.080%	NARY 7-CPROLLA7 115 kV Line 1
61675	RIDGEVW7	115	MP	0.9489	0.9385	-1.040%	015 2

The south and east dispatch SAF listed in **Table 4-7**, were not identified in the alternative dispatch scenario provided in Section 4.1.3. Because they were not repeated in both scenarios

This document contains confidential and proprietary information of WAPA or TranServ International, Inc. Do not copy or distribute.

they are not constraints to granting the subject request. However they remain as SAF and could be found in a delivery study to be constraints if long term firm transmission service is requested for the GI-0824 generating facility. For voltage violations due to critical contingencies that terminate at the Fort Thompson 345 kV bus, a special protection scheme could be used to ameliorate the constraint.

Unsolved Contingencies

Table 4-8 shows a list of south and east dispatch diverged contingencies for 2010 summer off peak south and east dispatch.

Table 4-8
2010 Summer Off Peak
South and East Dispatch
Diverged Contingencies

Contingency	LF Status	Pre-Project	Post-Project
310 - Multi Circuit GENTLMN3-REDWILO3 345 kV line 1 GENTLMN3-SWEET W3 345 kV line 2 RCDCEAST-RCSERCAP 230 kV line 1 NUNDRWD4 - RCSERCAP 230 kV line 1	Blowup	x	x

The contingency listed in **Table 4-8** was reviewed by WAPA and the ad hoc study group and were determined to be remote from the local area of the subject request, and a pre-existing conditions. As such, it was ignored.

This document contains confidential and proprietary information of WAPA or TranServ International, Inc. Do not copy or distribute.

4.1.3. 2010 Summer Off-Peak Alternate Dispatch Analysis (Sinking to WAPA)

This study investigated two distinctly different dispatch scenarios. The first scenario investigated involved increasing the GI-0824 generation and decreasing generation to the south and east. The second scenario investigated involved increasing the GI-0824 generation and decreasing specific WAPA generation north of GI-0824. Elements that were identified as constraints in both of these scenarios were identified as injection constraints because the loading on these elements exceeded their applicable rating regardless of dispatch direction and was impacted negatively by GI-0824 generation.

The results of this second dispatch scenario are given in this report section. The sink used for this alternative delivery scenario was WAPA's Groton and Oahe generation.

Thermal Impacts

System Intact

No 2010 summer off-peak alternate dispatch system intact thermal results above the SAF 5% DF criterion were found for the requested interconnection service.

N-1

The 2010 summer off-peak alternate dispatch N-1 contingency analysis thermal injection constraints above the SAF 3% DF criterion are given in **Table 4-8A**.

.

This document contains confidential and proprietary information of WAPA or TranServ International, Inc. Do not copy or distribute.

Table 4-8A
2010 Summer Off Peak Alternate Dispatch (Sinking to WAPA)
Thermal Injection Constraints - N-1 Contingency Results

Limiting Element	Rating N/E	Owner	Pre Project		Post Project		DF	Partial Service Avail	Contingency
			MVA	%	MVA	%			
FTTHOMP4-FTRANDL4 230 kV Line 1	320 / 352	WAPA	327.8	102.4 / 93.1	352.2	110 / 100	6.10%	397	FTTHOMP4-LAKE PLATTE4 230 kV Line 1
FTRANDL4-LAKE PLATTE4 230 kV Line 1	318 / 351	WAPA	317.1	99.7 / 90	341.5	107.4 / 97	6.10%	400	FTTHOMP4-FTRANDL4 230 kV Line 1
FTTHOMP4-LAKE PLATTE4 230 kV Line 1	318 / 351	WAPA	325.5	102.4 / 92.7	349.7	110 / 99	6.05%	400	FTTHOMP4-FTRANDL4 230 kV Line 1
HANLON 4-SIOUXFL4 230 kV Line 1	320 / 352	WAPA	340.9	106.5 / 96.8	360.5	112.6 / 102	4.90%	227	160 1 - multi-circuit/tower FTRANDL4 - SIOUXCY4 230 kV line FTRANDL4 - UTICAJC4 230 kV line

This document contains confidential and proprietary information of WAPA or TranServ International, Inc. Do not copy or distribute.

As can be seen in **Table 4-8A** and **Table 4-5**, the alternative dispatch injection constraints listed in Table 4-8A were also identified in the south and east dispatch scenario. However the loading identified in the alternative dispatch scenario was found to be lower than the loading identified in the south and east dispatch scenario. Thus these constraints are valid injection constraints and must be ameliorated to the loading levels as shown in **Table 4-8A**.

The 2010 summer off peak alternate dispatch N-1 contingency analysis thermal above the SAF 3% DF criterion are given in **Table 4-8B**. For repeated elements, only the contingency resulting in the highest post project loading is listed. A complete listing of all results above the SAF 3% DF criterion are shown in Appendix C

This document contains confidential and proprietary information of WAPA or TranServ International, Inc. Do not copy or distribute.

Table 4-8B
2010 Summer Off Peak Alternate Dispatch (Sinking to WAPA)
Thermal Significantly Affected Facilities – Single Contingency Results

Limiting Element	Rating N/E	Owner	Pre Project		Post Project		DF	Partial Service Avail	Contingency
			MVA	%	MVA	%			
HURON 4-CARPNTR4 230 kV Line 1	318 / 350	WAPA	310.9	97.8 / 88.8	350.5	110.2 / 100.1	9.90%	395	HURON 4-WATERTN4 230 kV Line 2
FTRANDL4-UTICAJC4 230 kV Line 1	318 / 350	WAPA	365.7	115 / 104.5	387.1	121.7 / 110.6	5.35%	0	130 1-Multi-terminal FTTHOMP4-SIOUXFL4 230 kV line FTTHOMP4-STORLA 4 230 kV line HANLON 4-STORLA 4 230 kV line STORLA 4-STORLA 7 230/115 kV Tx
MCCOOL 3-GR ISLD3 345 kV Line 1	717 / 789	NPPD	780.8	108.9 / 99	794.9	110.9 / 100.7	3.53%	233	MINGO 7-REDWILO3 345 kV Line 1
ELLENDL4-G132 POI 230 kV Line 1	319	WAPA	347.2	108.9	360.5	113.1	3.33%	0	LELANDO3-GROTON 3 345 kV Line 1
STORLA 4-STORLA 7 230-115 kV Tx #1	100 / 125	WAPA	136.1	136.1 / 108.9	148.4	148.4 / 118.7	3.08%	0	HANLON 4-STORLA 4 230 kV Line 1
ELLENDL4-ELLENDL7 230-115 kV Tx #1	100 / 125	WAPA	138.3	138.3 / 110.6	150.4	150.4 / 120.3	3.03%	0	OAKES 4-ELLENDL4 230 kV Line 1

This document contains confidential and proprietary information of WAPA or TranServ International, Inc. Do not copy or distribute.

The alternate dispatch SAF listed in **Table 4-8B** were reviewed by WAPA and the ad hoc study group and determined that these facilities are remote from the local area and POI of the subject. Therefore, these facilities are listed as potential delivery constraints and are for informational purposes only. However, these SAF could be found in a delivery study to be constraints if long term firm transmission service is requested for the GI-0824 generating facility.

Voltage Impacts

System Intact

No 2010 summer off-peak alternate dispatch system intact voltage results above the SAF criterion were found for the requested interconnection service.

N-1

Table 4-8C shows the 2010 summer off peak alternate dispatch N-1 SAF voltage results. For repeated elements, only the contingency that has the lowest post-project voltage is listed. A complete listing of all voltage SAF criterion results is given in Appendix C.

Table 4-8C
2010 Summer Off Peak Alternate Dispatch (Sinking to WAPA)
Voltage Significantly Affected Facilities – Single Contingency Results

BUS/NAME		KV	Owner	Pre Project	Post Project	Delta Volt %	Contingency
62639	WILSNLK7	115	GRE	0.8959	0.8849	-1.100%	NSP - 1

This document contains confidential and proprietary information of WAPA or TranServ International, Inc. Do not copy or distribute.

Unsolved Contingencies

Table 4-8D shows a list of diverged contingencies for 2010 summer off peak alternate dispatch.

Table 4-8D
2010 Summer Off Peak Alternate Dispatch (Sinking to WAPA)
Diverged Contingencies

Contingency	LF Status	Pre-Project	Post-Project
310 - Multi Circuit GENTLMN3-REDWILO3 345 kV line 1 GENTLMN3-SWEET W3 345 kV line 2 RCDCEAST-RCSERCAP 230 kV line 1 NUNDRWD4 - RCSERCAP 230 kV line 1	Blowup	x	x

The contingency listed in **Table 4-8D** was reviewed by WAPA and the ad hoc study group and were determined to be remote from the local area of the subject request, and pre-existing conditions. As such, it was ignored.

This document contains confidential and proprietary information of WAPA or TranServ International, Inc. Do not copy or distribute.

4.1.4. 2016 Summer Peak Analysis

Thermal Impacts

System Intact

No 2016 summer peak south and east dispatch system intact thermal results above the SAF 5% DF criterion were found for the requested interconnection service.

N-1

The 2016 summer peak south and east dispatch N-1 contingency analysis thermal injection constraints above the SAF 3% DF criterion are given in **Table 4-9**.

This document contains confidential and proprietary information of WAPA or TranServ International, Inc. Do not copy or distribute.

Table 4-9
2016 Summer Peak
South and East Dispatch
Thermal Injection Constraint – N-1 Contingency Results

Limiting Element	Rating N/E	Owner	Pre Project		Post Project		DF	Partial Service Avail	Contingency
			MVA	%	MVA	%			
HURON 4-GI-0710 230 kV Line 1	318 / 350	WAPA	293.8	92.4 / 83.9	363.7	114.4 / 103.9	17.48%	322	FTTHOMP4-HURON 4 230 kV Line 2

This document contains confidential and proprietary information of WAPA or TranServ International, Inc. Do not copy or distribute.

The south and east dispatch injection constraint listed in **Table 4-9**, was not identified in the alternative dispatch scenario likely because GI-0710 was not modeled. If the GI-0710 project comes to fruition the subject request's impact on the south and east dispatch injection constraint listed in **Table 4-9** must be reevaluated. At this time the Huron-GI-0710 230 kV line is not a constraint to interconnection service

The 2016 summer peak south and east dispatch N-1 contingency analysis thermal results above the SAF 3% DF criterion are given in **Table 4-9A**. For repeated elements, only the contingency resulting in the highest post-project loading is listed. A complete listing of all results above the 3% DF SAF criterion is given in Appendix C.

This document contains confidential and proprietary information of WAPA or TranServ International, Inc. Do not copy or distribute.

Table 4-9A
2016 Summer Peak
South and East Dispatch
Thermal Significantly Affected Facilities – Single Contingency Results'

Limiting Element	Rating N/E	Owner	Pre Project		Post Project		DF	Partial Service Avail	Contingency
			MVA	%	MVA	%			
LELANDO3- LELANDO4 345-230kV Tx #1	250 / 300	WAPA	347.5	139 / 115.8	373.5	149.4 / 124.5	6.50%	0	LELANDO3- LELANDO4 345-230kV Tx #2
STORLA 4-STORLA 7 230-115 kV Tx #1	100 / 125	WAPA	139.7	139.7 / 111.8	155	155 / 124	3.83%	0	HANLON 4-STORLA 4 230 kV Line 1

This document contains confidential and proprietary information of WAPA or TranServ International, Inc. Do not copy or distribute.

The south and east dispatch SAF listed in **Table 4-9A** were reviewed by WAPA and the ad hoc study group and determined that these facilities are remote from the local area and POI of the subject request. Therefore, these facilities are listed as potential delivery constraints and are for informational purposes only. However, these SAF could be found in a delivery study to be constraints if long term firm transmission service is requested for the GI-0824 generating facility.

Voltage Impacts

System Intact

Table 4-10 lists the 2016 summer peak south and east dispatch system intact SAF voltage results. A complete listing of all voltage SAF criterion results is given in Appendix C.

Table 4-10
2016 Summer Peak
South and East Dispatch
Voltage Significantly Affected Facilities – System Intact Results

BUS/NAME		KV	Owner	Pre Project	Post Project	Delta Volt %	Contingency
66832	KYPMP 22	115	WAPA	0.9901	0.9734	-1.670%	System Intact
66901	LETCHER7	115	WAPA	1.0009	0.9846	-1.630%	System Intact
66900	LETCHER4	230	WAPA	1.0061	0.9899	-1.620%	System Intact
66525	TYNDALL7	115	WAPA	1.01	0.9973	-1.270%	System Intact
66526	UTICAJC4	230	WAPA	1.0121	0.9998	-1.230%	System Intact
66249	ARMOUR 8	69	WAPA	1.0093	0.9981	-1.120%	System Intact
66833	KYPMPS23	115	WAPA	0.9995	0.9884	-1.110%	System Intact
66399	VFODNES8	69	WAPA	0.9179	0.9071	-1.080%	System Intact
64775	CLRWATR7	115	NPPD	0.9461	0.9355	-1.060%	System Intact
67406	TRIPP 7	115	WAPA	1.0035	0.9933	-1.020%	System Intact
66279	HANLON28	69	WAPA	0.9682	0.9582	-1.000%	System Intact

N-1

Table 4-11 lists the 2016 summer peak south and east dispatch single contingency SAF voltage results. For repeated elements, only the contingency that has the lowest post-project voltage is listed. A complete listing of all voltage SAF criterion results is given in Appendix C

Table 4-11
2016 Summer Peak
South and East Dispatch
Voltage Significantly Affected Facilities – N-1 Contingency Results

BUS/NAME		KV	Owner	Pre Project	Post Project	Delta Volt %	Contingency
64739	BATTLCR7	115	NPPD	0.7098	0.6778	-3.200%	BATTLCR7-NORFK.N7 115 kV line
64776	CO.LINE7	115	NPPD	0.7311	0.7004	-3.070%	BATTLCR7-NORFK.N7 115 kV line

This document contains confidential and proprietary information of WAPA or TranServ International, Inc. Do not copy or distribute.

64775	CLRWATR7	115	NPPD	0.778	0.7489	-2.910%	BATTLCR7-NORFK.N7 115 kV line
64915	NELIGH 7	115	NPPD	0.7566	0.7276	-2.900%	BATTLCR7-NORFK.N7 115 kV line
64794	CREITON7	115	NPPD	0.8199	0.7944	-2.550%	BATTLCR7-NORFK.N7 115 kV line
64926	ONEILL 7	115	NPPD	0.8663	0.8409	-2.540%	BATTLCR7-NORFK.N7 115 kV line
64812	EMMET 7	115	NPPD	0.8766	0.8529	-2.370%	BATTLCR7-NORFK.N7 115 kV line
64730	ATKINSN7	115	NPPD	0.885	0.8626	-2.240%	BATTLCR7-NORFK.N7 115 kV line
64938	PETRSBG7	115	NPPD	0.802	0.7804	-2.160%	BATTLCR7-NORFK.N7 115 kV line
64977	STUART 7	115	NPPD	0.8968	0.8758	-2.100%	BATTLCR7-NORFK.N7 115 kV line
64751	BLMFLD 7	115	NPPD	0.9053	0.8857	-1.960%	BATTLCR7-NORFK.N7 115 kV line
66399	VFODNES8	69	WAPA	0.8882	0.8705	-1.770%	SPLT RK4-SIOUXFL4 230 kV line
64822	FULERTN7	115	NPPD	0.8183	0.801	-1.730%	BATTLCR7-NORFK.N7 115 kV line
64726	ALBION 7	115	NPPD	0.8333	0.8166	-1.670%	BATTLCR7-NORFK.N7 115 kV line
64963	SPALDNG7	115	NPPD	0.8344	0.8198	-1.460%	BATTLCR7-NORFK.N7 115 kV line
64929	ORD 7	115	NPPD	0.8417	0.8298	-1.190%	BATTLCR7-NORFK.N7 115 kV line
64907	N.LOUP 7	115	NPPD	0.8575	0.8459	-1.160%	BATTLCR7-NORFK.N7 115 kV line

The south and east dispatch SAF listed in **Table 4-10** and **Table 4-11** were reviewed by WAPA and the ad hoc study group and were determined to be remote from the local area of the subject request. Therefore, no voltage injection constraints were identified that meet the WAPA feasibility study criteria for the requested interconnection service.

However, these SAF could be found in a transmission service study to be constraints if long term firm transmission service is requested for the GI-0824 generating facility.

This document contains confidential and proprietary information of WAPA or TranServ International, Inc. Do not copy or distribute.

4.1.5. 2016 Summer Peak Sensitivity Analysis

A sensitivity to the proposed Big Bend – Mission 230 kV line development evaluated the impact of the addition of the Big Bend – Mission 230 kV line on all SAF identified.

System Intact

No 2016 summer peak sensitivity south and east dispatch system intact thermal results above the SAF 5% DF criterion were found for the requested interconnection service.

N-1

The 2016 summer peak sensitivity south and east dispatch N-1 contingency analysis thermal injection constraints above the SAF 3% DF criterion are given in **Table 4-12**.

This document contains confidential and proprietary information of WAPA or TranServ International, Inc. Do not copy or distribute.

Table 4-12
2016 Summer Peak Sensitivity
South and East Dispatch
Thermal Injection Constraints – N-1 Contingency Results

Limiting Element	Rating N/E	Owner	Pre Project		Post Project		DF	Partial Service Avail	Contingency
			MVA	%	MVA	%			
HURON 4-GI-0710 230 kV Line 1	318 / 350	WAPA	290.2	91.3 / 82.9	358.5	112.7 / 102.4	17.08%	350	FTTHOMP4-HURON 4 230 kV Line 2

This document contains confidential and proprietary information of WAPA or TranServ International, Inc. Do not copy or distribute.

As can be seen from **Table 4-9** and **Table 4-12** the loading on the Huron – GI-0710 230 kV line is slightly lower with the Big Bend – Mission 230 kV line modeled. Thus the addition of the Big Bend – Mission 230 kV line would slightly decrease GI-0824 amelioration responsibility if the Huron – GI-0710 230 kV line loading were a constraint to interconnection service.

The 2016 summer peak sensitivity south and east dispatch N-1 contingency analysis thermal results above the SAF 3% DF criterion are given in **Table 4-12A**. For repeated elements, only the top contingency resulting in the highest post project loading are listed. A complete listing of all results above the 3% DF SAF criterion is given in Appendix C.

This document contains confidential and proprietary information of WAPA or TranServ International, Inc. Do not copy or distribute.

Table 4-12A
2016 Summer Peak Sensitivity
South and East Dispatch
Thermal Significantly Affected Facilities – Single Contingency Results'

Limiting Element	Rating N/E	Owner	Pre Project		Post Project		DF	Partial Service Avail	Contingency
			MVA	%	MVA	%			
LELANDO3-LELANDO4 345/230 kV Tx #1	250 / 300	WAPA	346.6	138.6 / 115.5	372.2	148.9 / 124.1	6.40%	0	LELANDO3-LELANDO4 345/230 kV Tx #2
STORLA 4-STORLA 7 230-115 kV Tx #1	100 / 125	WAPA	137.6	137.6 / 110.1	152.1	152.1 / 121.7	3.63%	0	HANLON 4-STORLA 4 230 kV Line 1

This document contains confidential and proprietary information of WAPA or TranServ International, Inc. Do not copy or distribute.

As can be seen from **Table 4-9A** and **Table 4-12A** the loading on the limiting elements is slightly lower with the Big Bend – Mission 230 kV line modeled. The sensitivity south and east dispatch SAF listed in **Table 4-12A** were reviewed by WAPA and the ad hoc study group and determined that these facilities are remote from the local area and POI of the subject request. Therefore, these facilities are listed as potential delivery constraints and are for informational purposes only. However, these SAF could be found in a delivery study to be constraints if long term firm transmission service is requested for the GI-0824 generating facility.

Voltage Impacts

System Intact

Table 4-13 shows the sensitivity south and east dispatch system intact SAF voltage results. A complete listing of all voltage SAF criterion results is given in Appendix C.

Table 4-13
2016 Summer Peak Sensitivity
South and East Dispatch
Voltage Significantly Affected Facilities – System Intact Results

BUS/NAME		KV	Owner	Pre Project	Post Project	Delta Volt %	Contingency
66832	KYPMP 22	115	WAPA	0.9898	0.9742	-1.560%	System Intact
66901	LETCHER7	115	WAPA	1.0006	0.9853	-1.530%	System Intact
66900	LETCHER4	230	WAPA	1.0058	0.9907	-1.510%	System Intact
66525	TYNDALL7	115	WAPA	1.0074	0.9945	-1.290%	System Intact
66526	UTICAJC4	230	WAPA	1.0112	0.9991	-1.210%	System Intact
66249	ARMOUR 8	69	WAPA	1.0068	0.9955	-1.130%	System Intact
66833	KYPMPS23	115	WAPA	0.9984	0.9875	-1.090%	System Intact
64775	CLRWATR7	115	NPPD	0.9431	0.9324	-1.070%	System Intact
66399	VFODNES8	69	WAPA	0.9175	0.907	-1.050%	System Intact
67409	MENNOJT7	115	WAPA	1.0101	0.9996	-1.050%	System Intact
67406	TRIPP 7	115	WAPA	1.0027	0.9927	-1.000%	System Intact

N-1

Table 4-14 shows the sensitivity south and east dispatch single contingency SAF voltage results. For repeated elements, only the contingency that has the lowest post-project voltage is listed. A complete listing of all voltage SAF criterion results is given in Appendix C.

This document contains confidential and proprietary information of WAPA or TranServ International, Inc. Do not copy or distribute.

Table 4-14
2016 Summer Peak Sensitivity
South and East Dispatch
Voltage Significantly Affected Facilities – N-1 Contingency Results

BUS/NAME		KV	Owner	Pre Project	Post Project	Delta Volt %	Contingency
64739	BATTLCR7	115	NPPD	0.7008	0.6754	-2.540%	BATTLCR7-NORFK.N7 115 kV Line 1
64776	CO.LINE7	115	NPPD	0.7225	0.6981	-2.440%	BATTLCR7-NORFK.N7 115 kV Line 1
64915	NELIGH 7	115	NPPD	0.7485	0.7253	-2.320%	BATTLCR7-NORFK.N7 115 kV Line 1
64775	CLRWATR7	115	NPPD	0.7693	0.7467	-2.260%	BATTLCR7-NORFK.N7 115 kV Line 1
64794	CREITON7	115	NPPD	0.8137	0.7927	-2.100%	BATTLCR7-NORFK.N7 115 kV Line 1
64926	ONEILL 7	115	NPPD	0.8578	0.8401	-1.770%	BATTLCR7-NORFK.N7 115 kV Line 1
64938	PETRSBG7	115	NPPD	0.7959	0.779	-1.690%	BATTLCR7-NORFK.N7 115 kV Line 1
64751	BLMFLD 7	115	NPPD	0.9013	0.8845	-1.680%	BATTLCR7-NORFK.N7 115 kV Line 1
66399	VFODNES8	69	WAPA	0.8874	0.8706	-1.680%	SPLT RK4-SIOUXFL4 230 kV Line 1
64812	EMMET 7	115	NPPD	0.8676	0.8532	-1.440%	BATTLCR7-NORFK.N7 115 kV Line 1
64822	FULERTN7	115	NPPD	0.8134	0.8	-1.340%	BATTLCR7-NORFK.N7 115 kV Line 1
64726	ALBION 7	115	NPPD	0.8286	0.8156	-1.300%	BATTLCR7-NORFK.N7 115 kV Line 1
64730	ATKINSN7	115	NPPD	0.8758	0.8636	-1.220%	BATTLCR7-NORFK.N7 115 kV Line 1
64963	SPALDNG7	115	NPPD	0.83	0.8191	-1.090%	BATTLCR7-NORFK.N7 115 kV Line 1

The south and east dispatch SAF listed in **Table 4-13** and **Table 4-14** were reviewed by WAPA and the ad hoc study group and were determined to be remote from the local area of the subject request. Therefore, no voltage injection constraints were identified that meet the WAPA feasibility study criteria for the requested interconnection service.

However, these SAF could be found in a transmission service study to be constraints if long term firm transmission service is requested for the GI-0824 generating facility.

This document contains confidential and proprietary information of WAPA or TranServ International, Inc. Do not copy or distribute.

4.2. Constrained Interface Analysis

Constrained interface analyses were performed using models, criteria, and methodology described in Section 3. The incremental impact of the 400 MW request was evaluated by comparing interface MW flow without and with the 400 MW request. Analyses were performed using the 2010 NMORG DFCALC program. These results are for informational purposes only to identify potential third party flowgate issues considered SAF and are not considered as constraints in granting interconnection to the subject request.

4.2.1. 2010 Summer Peak Analysis

Table 4-15 shows a list of interfaces having DF greater than the 3%/5% OTDF/PTDF SAF criteria. These are listed for informational purposes only and are not considered as constraints in granting interconnection to the subject request. A complete listing of all Constrained Interface SAF criterion results is given in Appendix C. A south and east dispatch was used for this analysis.

This document contains confidential and proprietary information of WAPA or TranServ International, Inc. Do not copy or distribute.

Table 4-15
2010 Summer Peak
South and East Dispatch
Constrained Interface Significantly Affected Facilities Results

Constrained Interface		Pre Project	Post Project	
Name	**Type**	**MW**	**MW**	**DF**
QUACDVQUA471	OTDF	1093.2	1174.2	20.3%
COOPER_S	PTDF	232.7	304.2	17.9%
QUA471CDVNEL	OTDF	777.5	837.5	15.0%
CDVNELQUA471	OTDF	773.3	833	14.9%
MWEX____PTDF	PTDF	786.8	843.5	14.2%
GRIS_LNC	PTDF	505.3	558.5	13.3%
SJHALKNAIASC	OTDF	348.9	400.2	12.8%
IASCLKNASJHA	OTDF	407.3	455.7	12.1%
PLPZIOZIOARC	OTDF	283.3	328.9	11.4%
NELELCCHESIL	OTDF	912.9	957.7	11.2%
FTCAL_S	PTDF	271.7	311.5	10.0%
EAUARPPRIBYR	OTDF	223.2	262.3	9.8%
LEEBYRNELELC	OTDF	633.5	671.7	9.6%
CHESILNELELC	OTDF	1086.9	1123.9	9.3%
PLPZIOCHESIL	OTDF	431.5	468.5	9.3%
PR_ISL_BYRON	PTDF	37.2	73.5	9.1%
EAUARP__PTDF	PTDF	219.2	254.4	8.8%
EAUARPWMPPAD	OTDF	227.8	262.7	8.7%
ADNZIOPLPZIO	OTDF	124.1	157.6	8.4%
PPRZIO__PTDF	PTDF	300.6	333.6	8.3%
NAPFOXNAPKEW	OTDF	-865.8	-843.3	5.6%
GENTLMREDWIL	PTDF	338.4	360.3	5.5%
AHDSTL__PTDF	PTDF	349.1	370.9	5.4%
WRWWRNWRWNAP	OTDF	-67.9	-47.9	5.0%
QUDCOR471QUD	OTDF	338.6	357.3	4.7%
QUDCORNEL471	OTDF	338.6	357.3	4.7%
BYRMLFBYRPVV	OTDF	111.3	127.5	4.1%

This document contains confidential and proprietary information of WAPA or TranServ International, Inc. Do not copy or distribute.

4.2.2. 2010 Summer Off Peak Analysis

Table 4-16 and **Table 4-16A** show lists of interfaces having DF greater than 3%/5% OTDF/PTDF SAF criteria. These are listed for informational purposes only and are not considered as constraints in granting interconnection to the subject request. A complete listing of all Constrained Interface SAF criterion results is shown in Appendix C. This analysis was performed for both a south and east dispatch and an alternative dispatch.

Table 4-16
2010 Summer Off Peak
South and East Dispatch
Constrained Interface Significantly Affected Facilities Results

Constrained Interface		Pre Project	Post Project	
Name	**Type**	**MW**	**MW**	**DF**
GRIS_LNC	PTDF	919.1	964.8	11.4%
QUACDVQUA471	OTDF	1904.9	1941.9	9.3%
COOPER_S	PTDF	1163.4	1192	7.1%
QUA471CDVNEL	OTDF	1218.5	1245.7	6.8%
CDVNELQUA471	OTDF	1210.1	1237	6.7%
FOXRUTLKGWLM	OTDF	246.4	266	4.9%
PLPZIOZIOARC	OTDF	1108.6	1127.8	4.8%
NELELCCHESIL	OTDF	1112.8	1131.7	4.7%
LEEBYRNELELC	OTDF	429.1	447.8	4.7%
SJHALKNAIASC	OTDF	1052.2	1070.8	4.6%
RUTWBOLKFWLM	OTDF	217.1	234.2	4.3%
CHESILNELELC	OTDF	1291.1	1307.8	4.2%
PLPZIOCHESIL	OTDF	1128.1	1144.5	4.1%
IASCLKNASJHA	OTDF	1093.3	1109.4	4.0%
ADNZIOPLPZIO	OTDF	669	683.1	3.5%
LAKFOXLAKLKF	OTDF	148.5	160.9	3.1%
LKFFOXLKFWLM	OTDF	150.9	163.3	3.1%

This document contains confidential and proprietary information of WAPA or TranServ International, Inc. Do not copy or distribute.

Table 4-16A
2010 Summer Off Peak Alternate Dispatch (Sinking to WAPA)
Constrained Interface Significantly Affected Facilities Results

Constrained Interface		Pre Project	Post Project	
Name	**Type**	**MW**	**MW**	**DF**
NONE				

This document contains confidential and proprietary information of WAPA or TranServ International, Inc. Do not copy or distribute.

4.2.3. 2016 Summer Peak Analysis

Table 4-17 shows a list of interfaces having DF greater than 3%/5% OTDF/PTDF SAF criteria. These are listed for informational purposes only and are not considered as constraints in granting interconnection to the subject request. A complete listing of all Constrained Interface SAF criterion results is shown in Appendix C. A south and east dispatch was used for this analysis.

This document contains confidential and proprietary information of WAPA or TranServ International, Inc. Do not copy or distribute.

Table 4-17
2016 Summer Peak
South and East Dispatch
Constrained Interface Significantly Affected Facilities Results

Constrained Interface		Pre Project	Post Project	
Name	**Type**	**MW**	**MW**	**DF**
QUACDVQUA471	OTDF	767.2	860.4	23.3%
COOPER_S	PTDF	199.1	272.9	18.5%
QUA471CDVNEL	OTDF	547.8	614.6	16.7%
CDVNELQUA471	OTDF	544.6	611	16.6%
MWEX____PTDF	PTDF	595.7	651.3	13.9%
GRIS_LNC	PTDF	360.5	413.8	13.3%
SJHALKNAIASC	OTDF	325.6	378.1	13.1%
PLPZIOZIOARC	OTDF	787.2	837.3	12.5%
IASCLKNASJHA	OTDF	391.6	441.1	12.4%
NELELCCHESIL	OTDF	1105.8	1153.6	12.0%
LEEBYRNELELC	OTDF	1167.6	1208.4	10.2%
EAUARPPRIBYR	OTDF	262.5	302.3	10.0%
EAUARP__PTDF	PTDF	258.8	297.6	9.7%
EAUARPWMPPAD	OTDF	272	310.6	9.7%
CHESILNELELC	OTDF	1132.3	1169.6	9.3%
PR_ISL_BYRON	PTDF	128.3	160	7.9%
FTCAL_S	PTDF	91.2	122.1	7.7%
PLPZIOCHESIL	OTDF	537.8	568.6	7.7%
PPRZIO__PTDF	PTDF	429.4	456.7	6.8%
QUDCOR471QUD	OTDF	244.6	269.9	6.3%
QUDCORNEL471	OTDF	244.6	269.9	6.3%
NAPFOXNAPKEW	OTDF	-888.5	-866.2	5.6%
AHDSTL__PTDF	PTDF	234.8	255.1	5.1%
GENTLMREDWIL	PTDF	299.9	320	5.0%
WRWWRNWRWNAP	OTDF	87.1	105.6	4.6%
ADNZIOPLPZIO	OTDF	-70.5	-57.3	3.3%

This document contains confidential and proprietary information of WAPA or TranServ International, Inc. Do not copy or distribute.

4.2.4. 2016 Summer Peak Sensitivity Analysis

Table 4-18 shows a list of interfaces having DF greater than 3%/5% OTDF/PTDF SAF criteria. These are listed for informational purposes only and are not considered as constraints in granting interconnection to the subject request. A complete listing of all Constrained Interface SAF criterion results is shown in Appendix C. A south and east dispatch was used for this analysis.

Table 4-18
2016 Summer Peak
South and East Dispatch
Constrained Interface Sensitivity Significantly Affected Facilities Results

Constrained Interface		Pre Project	Post Project	
Name	**Type**	**MW**	**MW**	**DF**
QUACDVQUA471	OTDF	766.8	860	23.3%
COOPER_S	PTDF	198.8	272.6	18.5%
QUA471CDVNEL	OTDF	547.6	614.3	16.7%
CDVNELQUA471	OTDF	544.3	610.7	16.6%
MWEX____PTDF	PTDF	595	650.4	13.9%
GRIS_LNC	PTDF	360.7	414.4	13.4%
SJHALKNAIASC	OTDF	325.3	377.8	13.1%
PLPZIOZIOARC	OTDF	786.6	836.7	12.5%
IASCLKNASJHA	OTDF	391.2	440.8	12.4%
NELELCCHESIL	OTDF	1105.6	1153.3	11.9%
LEEBYRNELELC	OTDF	1167.5	1208.2	10.2%
EAUARPPRIBYR	OTDF	262.1	301.7	9.9%
EAUARP__PTDF	PTDF	258.4	297.1	9.7%
EAUARPWMPPAD	OTDF	271.5	310.1	9.7%
CHESILNELELC	OTDF	1132.1	1169.4	9.3%
PR_ISL_BYRON	PTDF	127.7	159.2	7.9%
FTCAL_S	PTDF	90.7	121.5	7.7%
PLPZIOCHESIL	OTDF	537.5	568.3	7.7%
PPRZIO__PTDF	PTDF	429.1	456.4	6.8%
QUDCORNEL471	OTDF	244.4	269.7	6.3%
NAPFOXNAPKEW	OTDF	-888.7	-866.6	5.5%
AHDSTL__PTDF	PTDF	234.5	254.8	5.1%
GENTLMREDWIL	PTDF	300.4	320.6	5.1%
WRWWRNWRWNAP	OTDF	86.9	105.3	4.6%
ADNZIOPLPZIO	OTDF	-70.6	-57.5	3.3%

This document contains confidential and proprietary information of WAPA or TranServ International, Inc. Do not copy or distribute.

4.3. Prior Outage Analysis

A prior outage analysis is outside the scope of this study; therefore, a prior outage analysis was not performed as part of this study.

This document contains confidential and proprietary information of WAPA or TranServ International, Inc. Do not copy or distribute.

5. Stability Analysis

A dynamic stability analysis is outside the scope of this study; therefore, a stability analysis was not performed for this study.

This document contains confidential and proprietary information of WAPA or TranServ International, Inc. Do not copy or distribute.

6. Short Circuit Analysis

This IFS Short-Circuit Study analyzed the impact of the new 400 MW wind farm located in Buffalo and Hyde County, South Dakota. The interconnection request is in WAPA's system and will interconnect at WAPA's existing Fort Thompson 345/230 kV substation. WAPA performed the Short-Circuit Study using a model from the 2010 NMORG Package, to determine the impact on the available fault current of the system with the addition of this wind farm.

6.1. Base Case Development

The pre-project model used for this analysis is short-circuit case *2010sc.sav* included in the most recent NMORWG package (pkg2010-4-01-2010).

Starting from this case, the post-project case was developed by adding the proposed GI-0824 project.

6.2. Short – Circuit Calculations

Short-circuit calculations were performed to determine the impact of the proposed project on fault current levels at nearby substations. Single-phase and three-phase symmetrical fault current levels were calculated at local area buses, both without and with the proposed project. In order to calculate fault current levels, classical fault assumptions were used with a pre-fault voltage of 1.0 p.u.

Table 6-1 lists the single-phase and three-phase fault current levels at local substations which had an increase of at least 100 amps between pre- and post- GI-0824. These fault currents were compared against the lowest rated circuit breaker at each of these substations to determine whether or not the circuit breaker may be overstressed.

A comparison of the fault currents to the capability of breakers at the local substations indicates that there is adequate interrupting capability following the addition of the new generation.

This document contains confidential and proprietary information of WAPA or TranServ International, Inc. Do not copy or distribute.

Table 6-1:
Fault Currents Without and With Proposed GI-0824 Wind Farm

Bus	kV	Min Breaker Rating Amp	Without GI-0824 Fault Current (Amp)		With GI-0824 Fault Current (Amp)		Change Amp	
			3-PH	SLG	3-PH	SLG	3-PH	SLG
66506 [FTTHOMP3]	345	40,000 kA	7435.6	6748.3	7700.8	6897.4	265.2	149.1
66507 [FTTHOMP4]	230	40 kA	16350.5	15927.6	17554.8	16700	1204.3	772.4
66514 [HURON 4]	230	31.5 kA	9431	8751.8	9547.2	8820.6	116.2	68.8
66519 [OAHE 4]	230		4	13091.1	12406.4	13312.6	272.4	221.5
66540 [BIGBND14]	230		10680.9	10756.9	11112.9	11059.4	432	302.5
66541 [BIGBND24]	230		10618.1	10709.4	11043.8	11008.5	425.7	299.1

This document contains confidential and proprietary information of WAPA or TranServ International, Inc. Do not copy or distribute.

7. Conceptual Cost Estimate

This non-binding good faith cost estimate is provided for system improvements associated with the interconnection of project GI-0824. Also included is the non-binding good faith cost estimates for Network Reinforcements required to mitigate the impacts of project GI-0824. This is only a conceptual cost estimate for planning purposes. These were compiled by Western Area Power Administration and will be further developed and refined in the Facility Study.

It should be noted that the information presented in **Table 7-1** and **Table 7-2** are with project GI-0824 modeled at the requested 400 MW. Substation configuration and bus work costs needed to attach the project to the respective point of interconnection is not included in these costs.

This document contains confidential and proprietary information of WAPA or TranServ International, Inc. Do not copy or distribute.

Table 7-1[4]
Conceptual Cost Estimates for 230 kV Terminal POI

Facilities	No.	Unit Cost $	Total Cost $
(1.1) 230 kV Breaker and a Half Bay at Fort Thompson (2000 amp)			
Bus Section Bay	2	$826,000	$1,652,000
Bus Tie Bay	1	$1,033,000	$1,033,000
Steel and Footings	1	$309,333	$309,333
		Total POI Cost:	**$2,994,333**

[4] Costs do not include: Planning, lands and rights, environmental, surveys, geologic investigations, designs and specifications, or construction supervision.

This document contains confidential and proprietary information of WAPA or TranServ International, Inc. Do not copy or distribute.

Table 7-2[5]
Conceptual Cost Estimates for IS Network Reinforcements

Facilities	No.	Unit Cost $	Total Cost $
(2.1) Upgrade to Increase the Fort Thompson – Fort Randall 230 kV line above 385 MVA			
Uprates to Fort Randall Terminal			
Breakers 2382 and 2386 to 2000 amps cont. = (797 MVA)	2	$148,000	$296,000
Subtotal			$296,000
(2.2) Upgrade to Increase the Fort Thompson – Lake Platte – Fort Randall 230 kV line above 383 MVA			
Uprates to Fort Randall Terminal			
Breakers 2182 and 2186 to 2000 amps cont. = (797 MVA)	2	$148,000	$296,000
Breakers 2182 and 2186 Bushing CT's tap to 1200 amps cont. = (478 MVA)	1	$5,000	$5,000
Uprates to Lake Platte Terminal			
Breakers 182 and 282 Bushing CT's tap to 1200 amps cont. = (478 MVA)	1	$5,000	$5,000
Uprates to Fort Thompson Terminal			
Breakers 1782 and 1786 Bushing CT's replaced with 1200 amps cont. =(478 MVA)	2	$21,000	$42,000
Subtotal			$348000
(2.3) Upgrade to Increase the VT Hanlon – Sioux Falls 230 kV line above 392 MVA			
Uprates to VT Hanlon Terminal			
Breaker 282 Bushing CT's tap to 1200 amps cont. = (478 MVA)	1	$5,000	$5,000
Uprates to Sioux Falls Terminal			
Breakers 2482 and 2782 Bushing CT's tap to 1200 amps cont. = (478 MVA)	1	$5,000	$5,000
Subtotal			$10,000
Total Cost for IS Network Reinforcements prior to commissioning of GI-0710 :			**$654,000**
(2.4) Upgrade to Increase the Huron – Ft. Thompson (Huron – GI-0710) 230 kV line above 368 MVA			
Uprates to Huron Terminal			
Breakers 582 and 586 Bushing CT tap to 1200 amps cont. = (478 MVA)	1	$2,500	$2,500
Breakers 782 and 786 Bushing CT tap to 1200 amps cont. = (478 MVA)	1	$2,500	$2,500
Subtotal			$5,000
Total Cost for IS Network Reinforcements after commissioning of GI-0710:			**$659,000**

[5] Due to the above upgrades bringing the line limits to the conductor rating there could be additional costs. If upon further analysis, it is determined the conductors of affected lines are not sufficient.

This document contains confidential and proprietary information of WAPA or TranServ International, Inc. Do not copy or distribute.

This document contains confidential and proprietary information of WAPA or TranServ International, Inc. Do not copy or distribute.

Appendix A: Model Documentation for Steady State

Appendix A.1 Generator Data for Power flow model

- Generator Type: 1.5 MW GE Wind Turbines; .95 lead/lag power factor.
    - Requires 267 1.5 MW GE Wind Turbines
    - One equivalent generator (400 MW)
    - Sbase = 421 MVA
    - Q max = 131.5 MVAR and Qmin = -131.5 MVAR
- Wind farm collector system was not modeled. An equivalent generator was modeled on the 34.5 kV bus.
- POI is located at the Fort Thompson 230kV bus.
- One 230 kV – 34.5 kV equivalent step-up transformer was modeled:
    - Capacity: 448 MVA
    - Positive Sequence Impedance: 8 % of transformer MVA base
    - X/R Ratio: 30

This document contains confidential and proprietary information of WAPA or TranServ International, Inc. Do not copy or distribute.

Appendix A.2 Prior Queued Projects included in the study

Table A-2
WAPA Prior Queued Projects Included in the Pre-GI-0824 Models

Bus Number	Project Number	QUEUE DATE	POINT OF INTERCONNECTION	SMR OUTPUT (MW)	REQ'D IS DATE	2010 NMORG Peak MW *sp10aa.sav*	Pre-GI-0824 2010peak MW	2010 NMORG Off-peak MW *urg-so10aa.sav*	Pre-GI-0824 off-peak MW	2016 NMORG Peak MW *sp16aa.sav*	Pre-GI-0824 2016peak MW
66604	GI-0514	01-Nov-05	Big Bend 230kV	225	01-Jul-07	Not modeled	225	Not included	0	Not modeled	225
99616	GI-0602	31-Mar-06	Wessington Springs 230kV	100	01-Dec-08	10.5	100	10.5	100	10.5	100
66736	GI-0710	24-May-07	Ft. Thompson – Huron 230kV	100	31-Dec-09	Not modeled	100	Offline	Offline	Not modeled	100
66738	GI-0711	11-Jun-07	Ft. Thompson-Oahe 230kV	50	01-Jun-10	Not modeled	50	Offline	Offline	Not modeled	50
67119	GI-0713	11-Jun-07	Ft. Thompson-Sx. Falls 230kV(near wessington	50	01-Jun-10	offline	50	offline	50	offline	50
66738	GI-0712	11-Jun-07	Ft. Thompson-Oahe 230kV	100	01-Jun-10	Not modeled	100	Offline	Offline	Not modeled	100
67119	GI-0714	11-Jun-07	Ft. Thompson-Sx. Falls 230kV(near wessington	100	01-Jun-10	offline	100	offline	100	offline	100
66740	GI-0809	05-May-08	Winner-Gregory 115kV	150	01-Jun-10	Not modeled	150	Not modeled	150	Not modeled	150
66739	GI-0818	15-Jul-08	Ft Thompson 230kV	150	01-Sep-10	Not modeled	150	Not modeled	150	Not modeled	150

This document contains confidential and proprietary information of WAPA or TranServ International, Inc. Do not copy or distribute.

Table A-2A
Prior Queued Generation and their NMORG and Pre-GI-0824 Modeling

Bus Number	GI #	Size	2010 NMORG Off-peak	Pre-GI-0824 off-peak	2010 NMORG Peak	Pre-GI-0824 2010peak	2016 NMORG Peak	Pre-GI-0824 2016peak	Inside NDEX	Queue Date	Type
67292	GI-0208	40	0	40	0	0	0	0	YES	20-Jun-02	Wind
67293	**GI-0209**	**40**	7.5	**40**	0	**40**	0	**40**	NO	20-Jun-02	Wind
67274	GI-0316	120	0	120	0	120	120	120	NO	04-Aug-03	Gas
68378	G380	150	150	150	15	150	50	150	YES	21-Nov-03	Wind
61603	G502	50.6	40	50.6	0	0	0	0	YES	14-Mar-05	Wind
61606	GS659	49.5	49.5	49.5	0	0	0	0	YES	01-Sep-06	Wind
63645	G645&G788	99	0	99	0	99	0	99	YES	26-May-06	Coal
67157	GI-0503&GI-0720	116	115.5	115.5	0	0	0	0	YES	28-Jan-05	Wind
67295	GI-0508	49.5	49.5	49.5	0	0	0	0	YES	18-Apr-05	Wind
99616	**GI-0602**	**100**	10.5	**100**	10.5	**100**	10.5	**100**	NO	31-Mar-06	Wind
67274	GI-0608	120	0	120	0	120	120	120	NO	14-Jul-06	Gas
67255	GI-0615	49.5	49.5	49.5	0	0	0	0	YES	18-Oct-06	Wind
66881	GM0100&GM0200	160	0	160	31.5	31.5	159	159	YES	11-Sep--06	Wind
67393	G767	19.5	0	19.5	19.5	19.5	19.5	19.5	YES	20-Mar-07	Wind
67399	G132	180	180	180	180	180	180	180	YES	17-Sep-01	Wind
63087	G408	12	12	12	0	0	0	0	YES	02-Mar-04	Wind
66883	GM00300	40.5	0	40.5	7.5	7.5	40.5	40.5	YES	31-Jul-07	Wind
66700	GM00500	352	0	352	196.5	196.5	196.5	196.5	YES	3-Jan-08	Wind

This document contains confidential and proprietary information of WAPA or TranServ International, Inc. Do not copy or distribute.

Appendix A.3 Miscellaneous Updates and Corrections

Updates and corrections made to the GI-0824 power flow cases are listed in Table A-3.

Table A-3: Model Updates and Corrections

Response File	Description	2010 SUPK	2010 SUOP	2016 SUPK
GI-0514-BIG BEND 230kV.idv	Prior Queued	x	x	x
GI0602-Upgrades.idv	Increasing MW	x	x	x
GI-0710 - Ft.Thmps-Huron.idv	Prior Queued	x	x	x
GI0711-GI0712.idv	Prior Queued	X	X	x
gi0713-14-IS 150 MW.idv	Prior Queued	x	x	x
GI-0809.idv	Prior Queued	x	x	x
GI0818--FT.Thompson.idv	Prior Queued	x	x	x
Maxing G380.idv	Increasing MW	x	x	x
Turning G645&G788 on 99 MW.idv	Turn On Local Gen	x	x	x
Turning OHAHE On.idv	Turn On Local Gen	x	x	x
GI0209-FTTMCLR ON.idv	Turn On Local Gen	x	x	x
Turning GI0208 On.idv	Turn On Local Gen		x	
Max G502.idv	Turn On Local Gen		x	
Turning GM0100-0200 ON.idv	Max Langdon		X	
Turning1 GM0100-0200 ON.idv	Max Langdon		x	
Turning G767 ON.idv	Turn On Local Gen		x	
Turning GM0300 ON.idv	Max Langdon		x	
GM0500-ON.idv	Turn On Local Gen		x	
Groton SVC.idv	Turn SVC on		x	
Maxing Big Bend Gens.idv	Maxing Big Bend Gen			x
WAPA_Rating Change.idv	Rating Change	x	x	x
Groton CT.idv	Maximizing Groton CT	X	X	X
i-set-sqbt-dc-500mw.idv	Setting DC to 500 MW		x	x

This document contains confidential and proprietary information of WAPA or TranServ International, Inc. Do not copy or distribute.

Response File	Description	2010 SUPK	2010 SUOP	2016 SUPK
GI0824--FT.Thompson 230kV.idv	Study Project	x	x	x
add_bg-lower_brule-Reliantl-we.idv	Out year sensitivity			x
MH-SVS SETSYNC.idv	Add additional MH SVC		x	
let-mit-115.idv	New Letcher – Mitchell 115 kV line		x	
FTThmps-GrIs-Lenold line reactance	Turn off line reactance		x	

This document contains confidential and proprietary information of WAPA or TranServ International, Inc. Do not copy or distribute.

Appendix A.4

Model Documentation
Appendix A.4 Existing WAPA Generation Modeling

Existing WAPA Generation modeling are listed in Table A-4.

Table A-4
Existing WAPA Generation Modeling

Bus Number	Unit Name	Id	2010 Supk		2010 Suop		2016 Supk	
			Output	Capacity	Output	Capacity	Output	Capacity
60372	SARATOG7	1	0	23	23	23	0	23
66219	MI CTYE8	1	28	28	0	28	28	28
66229	FLANDRU8	1	11	12.5	0	12.5	11	12.5
66235	SIOUXFL8	2	0	4.1	0	4.1	0	4.1
66245	CLEVELD8	1	0	2.5	0	2.5	0	2.5
66410	FTPECK3G	3	42	42	42	42	42	42
66414	FTPECK4G	4	45	48	45	48	0	48
66415	FTPECK5G	5	45	49	45	49	49	49
66421	WILISTN7	2	0	9.6	0	9.6	0	9.6
66434	FARGOSVC	1	0	0	0	0	0	0
66457	GARISN1G	1	94	96	94	96	96	96
66458	GARISN2G	2	94	96	94	96	96	96
66459	GARISN3G	3	94	96	94	96	96	96
66460	GARISN4G	4	94	99	94	99	99	99
66461	GARISN5G	5	94	99	94	99	0	99
66491	IRVSIMM7	1	0	6	0	6	0	6
66528	WOONSKT7	1	2	2	NA	NA	NA	NA
66528	WOONSKT7	2	2	2	NA	NA	NA	NA
66539	WATERSVC	1	0	0	0	0	0	0
66542	BGBND12G	1	59	59	59	59	59	59

This document contains confidential and proprietary information of WAPA or TranServ International, Inc. Do not copy or distribute.

Bus Number	Unit Name	Id	2010 Supk		2010 Suop		2016 Supk	
			Output	Capacity	Output	Capacity	Output	Capacity
66542	BGBND12G	2	59	59	59	59	59	59
66543	BGBND34G	3	59	59	59	59	59	59
66543	BGBND34G	4	59	59	59	59	59	59
66544	BGBND56G	5	59	59	59	59	59	59
66544	BGBND56G	6	59	59	59	59	59	59
66545	BGBND78G	7	59	59	59	59	59	59
66545	BGBND78G	8	58	58	58	58	58	58
66546	FTRDL12G	1	43	43	43	43	43	43
66546	FTRDL12G	2	43	43	43	43	43	43
66547	FTRDL34G	3	43	43	43	43	43	43
66547	FTRDL34G	4	43	43	43	43	43	43
66548	FTRDL56G	5	43	43	43	43	43	43
66548	FTRDL56G	6	44	44	44	44	44	44
66549	FTRDL78G	7	44	44	44	44	44	44
66549	FTRDL78G	8	44	44	44	44	44	44
66556	OAHE2-3G	2	98	98	98	98	98	98
66556	OAHE2-3G	3	98	98	98	98	98	98
66557	OAHE4-5G	4	98	98	98	98	98	98
66557	OAHE4-5G	5	98	98	98	98	98	98
66558	OAHE6-7G	7	97	97	97	97	97	97
66558	OAHE6-7G	6	97	97	97	97	97	97
66559	OAHE 1G	1	98	98	98	98	106.92	98
66575	GAVINS1G	1	31	31	31	31	31	31
66576	GAVINS2G	2	31	31	31	31	31	31
66577	GAVINS3G	3	30	30	30	30	30	30
66581	SPENCER8	1	0	20	0	20	0	20
66581	SPENCER8	4	0	8	0	8	0	8

This document contains confidential and proprietary information of WAPA or TranServ International, Inc. Do not copy or distribute.

Bus Number	Unit Name	Id	2010 Supk		2010 Suop		2016 Supk	
			Output	Capacity	Output	Capacity	Output	Capacity
66581	SPENCER8	5	0	4	NA	NA	0	4
66581	SPENCER8	2	0	4	0	4	0	4
66591	J2PRMGR8	1	0	1.4	0	1.4	0	1.4
66599	J10KMBL8	1	0	0.4	0	0.4	0	0.4
67103	ANTEL31G	1	480	480	480	480	480	480
67107	ANTEL32G	2	480	480	480	480	480	480
67110	LELAN41G	1	225	230	225	230	225	230
67111	LELAN32G	2	475	475	475	475	475	475
67116	SPIRI71G	1	52	52	0	52	52	52
67117	SPIRI72G	2	52	52	0	52	52	52
67118	LARAM31G	1	593.5	611	593.5	611	593.5	611
67157	NDPRWND9	1	0	12	12	12	0	12
67157	NDPRWND9	2	0	22.5	22.5	22.5	0	22.5
67157	NDPRWND9	3	0	34.5	34.5	34.5	0	34.5
67157	NDPRWND9	4	0	46.5	46.5	46.5	0	46.5
67226	AVS30019	1	-19.1	20	-19.1	20	-19.1	20
67227	AVS30029	1	-6.9	8	-6.9	8	-6.9	8
67228	AVS14529	1	-6.6	8	-6.6	8	-6.6	8
67229	AVS17219	1	-6.6	8	-6.6	8	-6.6	8
67234	DGCX4 9	1	-15	20	-15	20	-15	20
67234	DGCX4 9	2	-15	20	-15	20	-15	20
67255	WILTCLR2	1	0	4.5	4.5	4.5	0	4.5
67255	WILTCLR2	2	0	10.5	10.5	10.5	0	10.5
67255	WILTCLR2	3	0	15	15	15	0	15
67255	WILTCLR2	4	0	19.5	19.5	19.5	0	19.5
67266	NBCS5 1G	1	6	7.5	6	7.5	6	7.5
67267	NBCS121G	1	6	7.5	6	7.5	6	7.5

This document contains confidential and proprietary information of WAPA or TranServ International, Inc. Do not copy or distribute.

Bus Number	Unit Name	Id	2010 Supk		2010 Suop		2016 Supk	
			Output	Capacity	Output	Capacity	Output	Capacity
67273	GROTSYNC	1	0	0	0	0	0	0
67274	GROTON G	1	120	125	120	125	120	125
67274	GROTON G	2	120	125	120	125	120	125
67276	NBCS7 1G	1	6	7.5	6	7.5	6	7.5
67277	NBCS9 1G	1	6	7.5	6	7.5	6	7.5
67278	NBCS101G	1	6	7.5	6	7.5	6	7.5
67279	NBCS111G	1	6	7.5	6	7.5	6	7.5
67292	EDGECLR1	1	0	4.5	4.5	4.5	0	4.5
67292	EDGECLR1	2	0	7.5	7.5	7.5	0	7.5
67292	EDGECLR1	3	0	12	12	12	0	12
67292	EDGECLR1	4	0	16.5	16.5	16.5	0	16.5
67293	FTTMCLR1	1	0	4.5	4.5	4.5	0	4.5
67293	FTTMCLR1	2	0	7.5	7.5	7.5	0	7.5
67293	FTTMCLR1	3	0	12	12	12	0	12
67293	FTTMCLR1	4	0	16.5	16.5	16.5	0	16.5
67295	WILTCLR1	1	0	4.5	4.5	4.5	0	4.5
67295	WILTCLR1	2	0	10.5	10.5	10.5	0	10.5
67295	WILTCLR1	3	0	15	15	15	0	15
67295	WILTCLR1	4	0	19.5	19.5	19.5	0	19.5
67300	CLBRTSNG	1	0	120	120	120	0	120
67300	CLBRTSNG	2	0	8	7.5	8	0	8
67332	GLENDCT7	1	0	42	0	34.5	41	42
67332	GLENDCT7	2	0	41	0	44	24.1	41
67344	HESKET1G	1	22	29	22	23	28	29
67345	HESKET2G	2	75	73	75	75	75	73
67355	LEWIS71G	1	44	52	44	53	52	52
67363	G297 NR	1	0	7.2	NA	NA	0	7.2

This document contains confidential and proprietary information of WAPA or TranServ International, Inc. Do not copy or distribute.

Bus Number	Unit Name	Id	2010 Supk		2010 Suop		2016 Supk	
			Output	Capacity	Output	Capacity	Output	Capacity
67364	G297 ER	1	0	25.2	NA	NA	0	25.2
67387	NBCS8 1G	1	6	7.5	6	7.5	6	7.5
67393	DW WIND9	1	19.5	19.5	19.5	19.5	19.5	19.5
67399	G132 GEN	1	180	180	180	180	180	180
67402	ABDNSBT7	1	0	20.3	0	20.3	0	20.3
67403	REDFLD 7	1	0	2	0	2	0	2
67403	REDFLD 7	2	0	4	0	4	0	4
67403	REDFLD 7	3	0	2.7	0	2.7	0	2.7
67404	HURONWP7	1	0	4.6	0	4.6	0	4.6
67404	HURONWP7	2	0	12	0	12	0	12
67404	HURONWP7	3	0	46	0	46	0	46
67404	HURONWP7	4	0	2.5	0	2.5	0	2.5
67405	MITCHEL7	1	0	80	0	80	0	80
67407	YKNTJCT7	1	13.4	13	13.4	13	13.4	13
67450	DENMUN G	1	0	1.8	0	1.8	0	1.8
67451	WTRTNPP	1	0	53.6	0	53.6	53.6	53.6
67465	EXIRA 1G	1	50	50	12.09	45	50	50
67467	MPSBROOK	1	0	6.3	0	6.3	0	6.3
67467	MPSBROOK	W2	0	1.5	NA	NA	0	1.5
67468	EXIRA 2G	2	50	50	0	45	50	50
67469	EXIRA 3G	3	22.2	40	22.2	40	40	40
67473	MMU SW 7	WN	18.9	18.9	4.9	18.9	18.9	18.9
99616	WSNGTN1G	1	0	4.5	4.5	4.5	0	4.5
99616	WSNGTN1G	3	0	15	15	15	0	15
99616	WSNGTN1G	4	0	21	21	21	0	21
99616	WSNGTN1G	2	10.5	10.5	10.5	10.5	10.5	10.5

This document contains confidential and proprietary information of WAPA or TranServ International, Inc. Do not copy or distribute.

Appendix A.5

Model Documentation
Appendix A.5 PFINFO

- Pre-GI0824_sp10bb.pfinfo
- Post-GI0824_sp10cc.pfinfo
- Pre-GI0824_urg-so10bb.pfinfo
- Post-GI0824_urg-so10cc.pfinfo
- Pre-GI0824_sp16bb.pfinfo
- Post-GI0824_sp16cc.pfinfo
- GI0824_sp16bb-SENS.pfinfo
- GI0824_sp16cc-SENS.pfinfo

Provided Separately

This document contains confidential and proprietary information of WAPA or TranServ International, Inc. Do not copy or distribute.

Appendix B: Powerflow One Line Diagrams

2010 Summer Peak Pre-Project

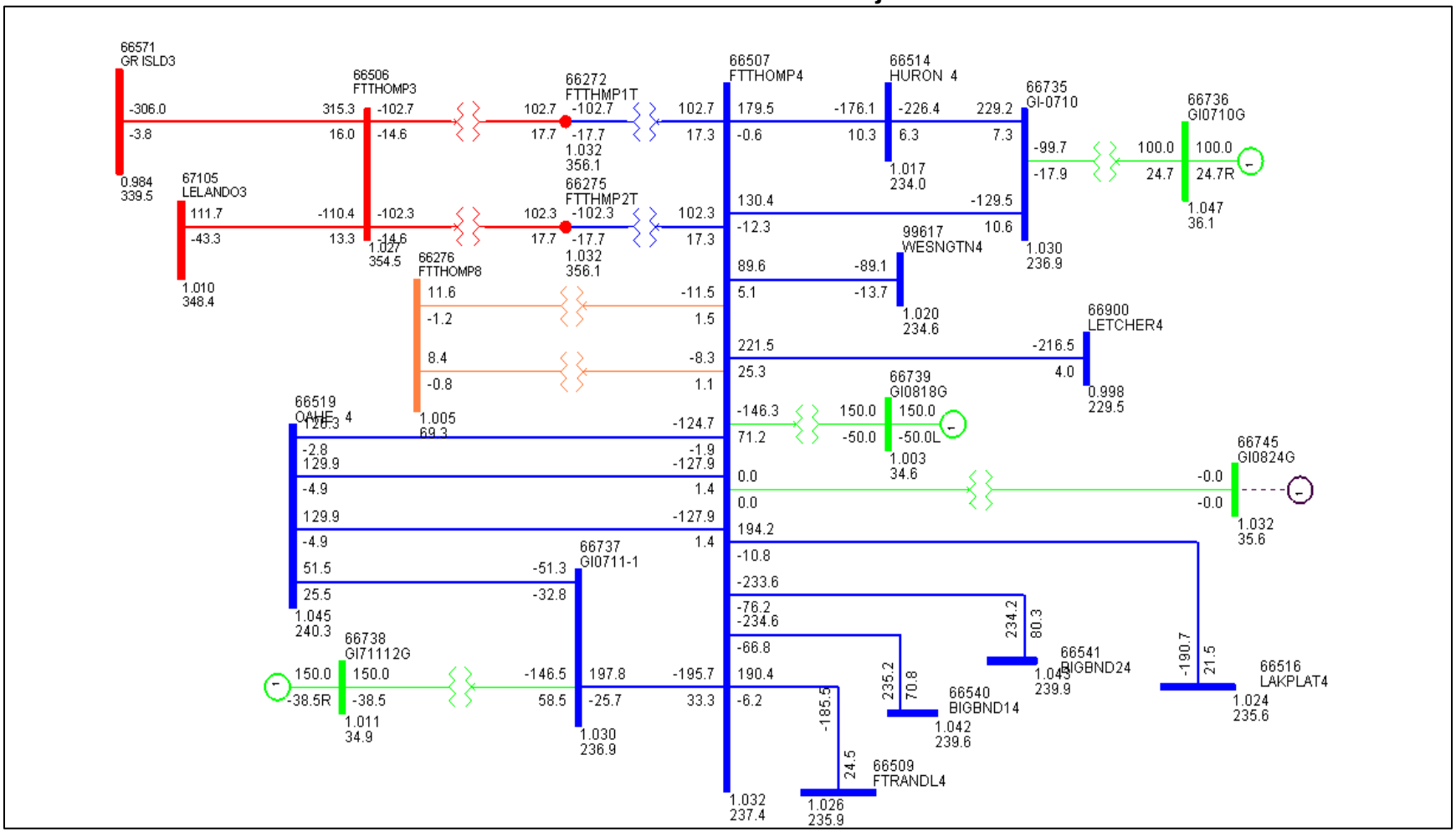

2010 Summer Peak Post-Project

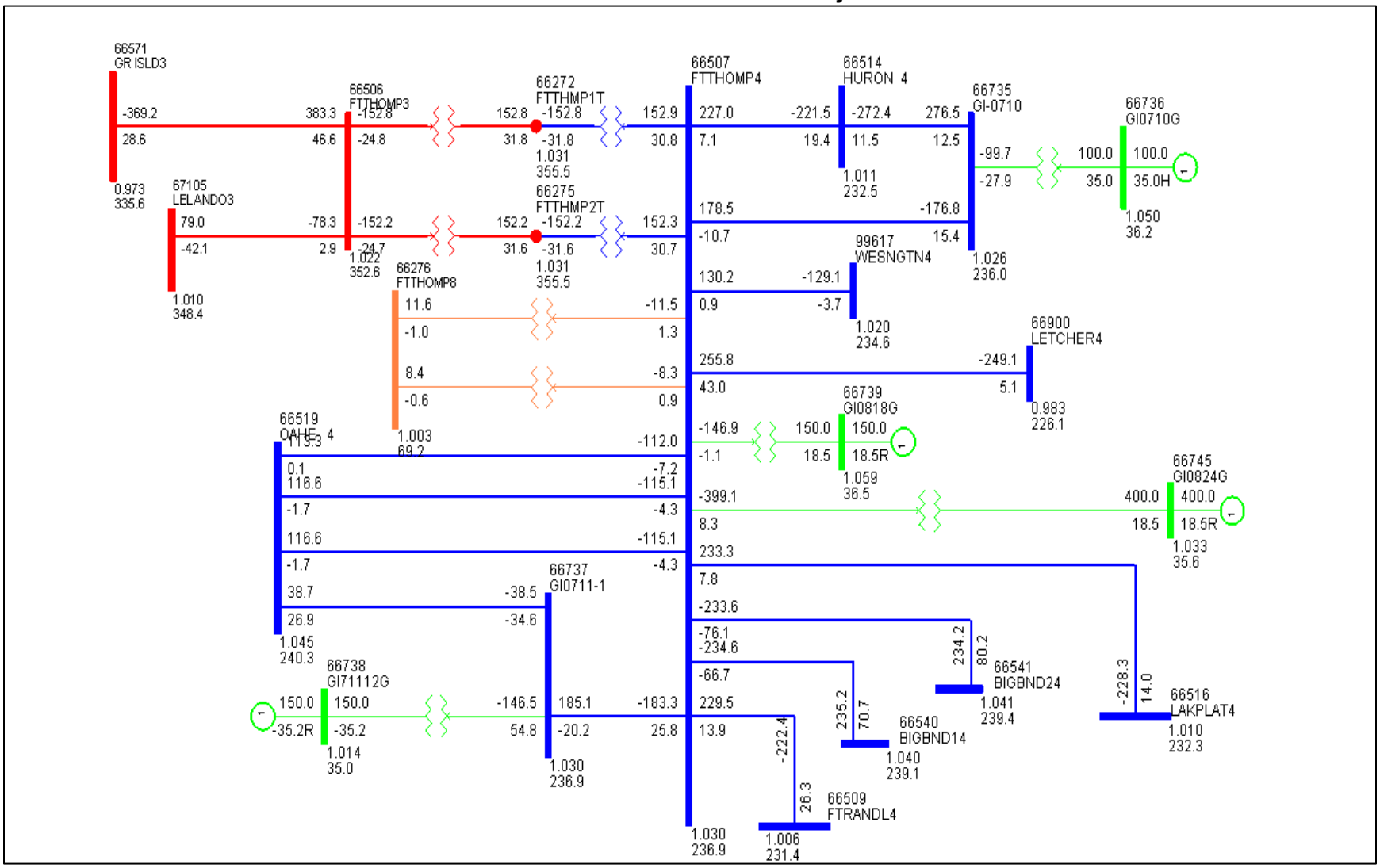

This document contains confidential and proprietary information of WAPA or TranServ International, Inc. Do not copy or distribute.

2010 Summer Off Peak Pre-Project

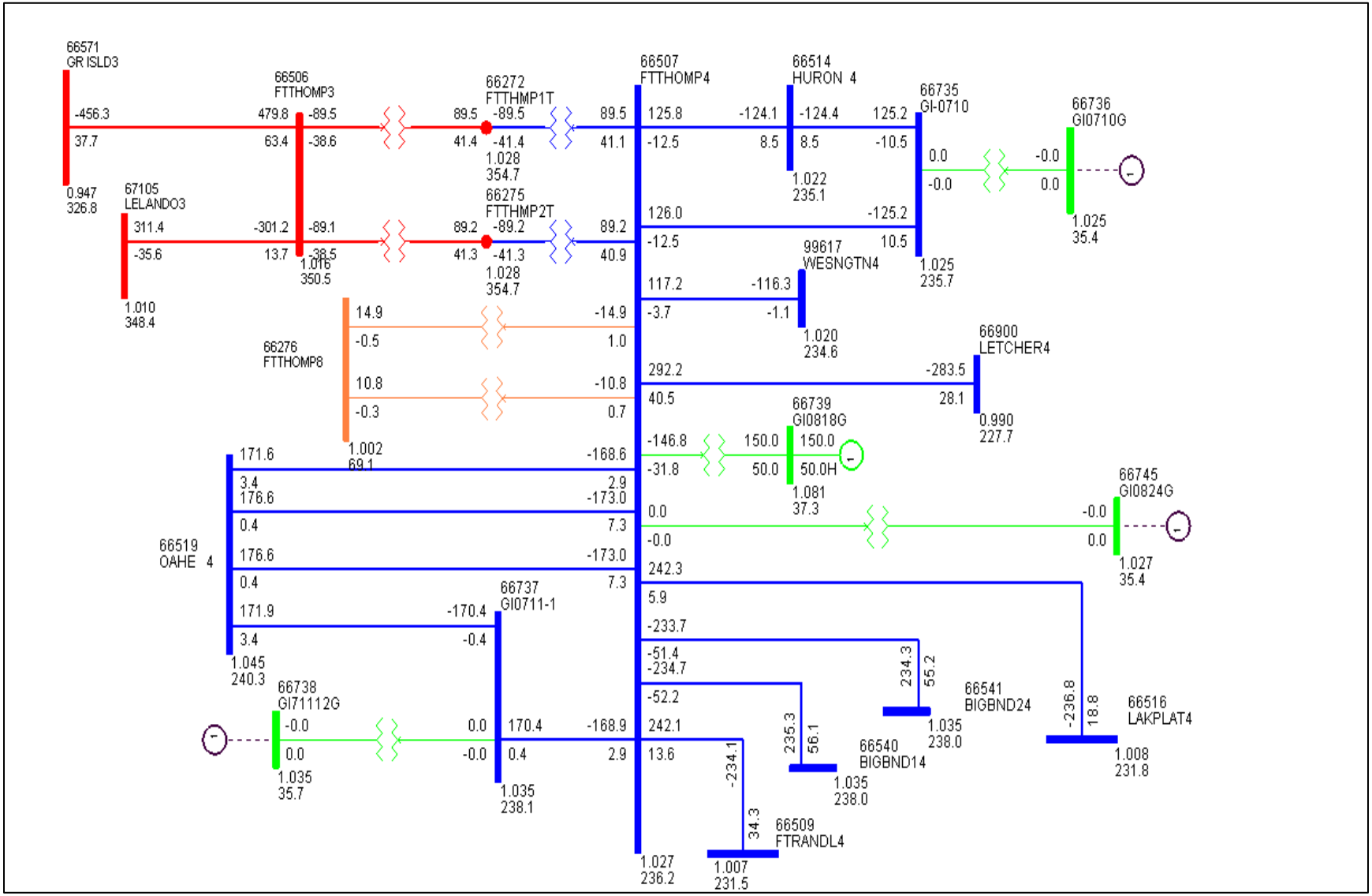

2010 Summer Off Peak Post-Project

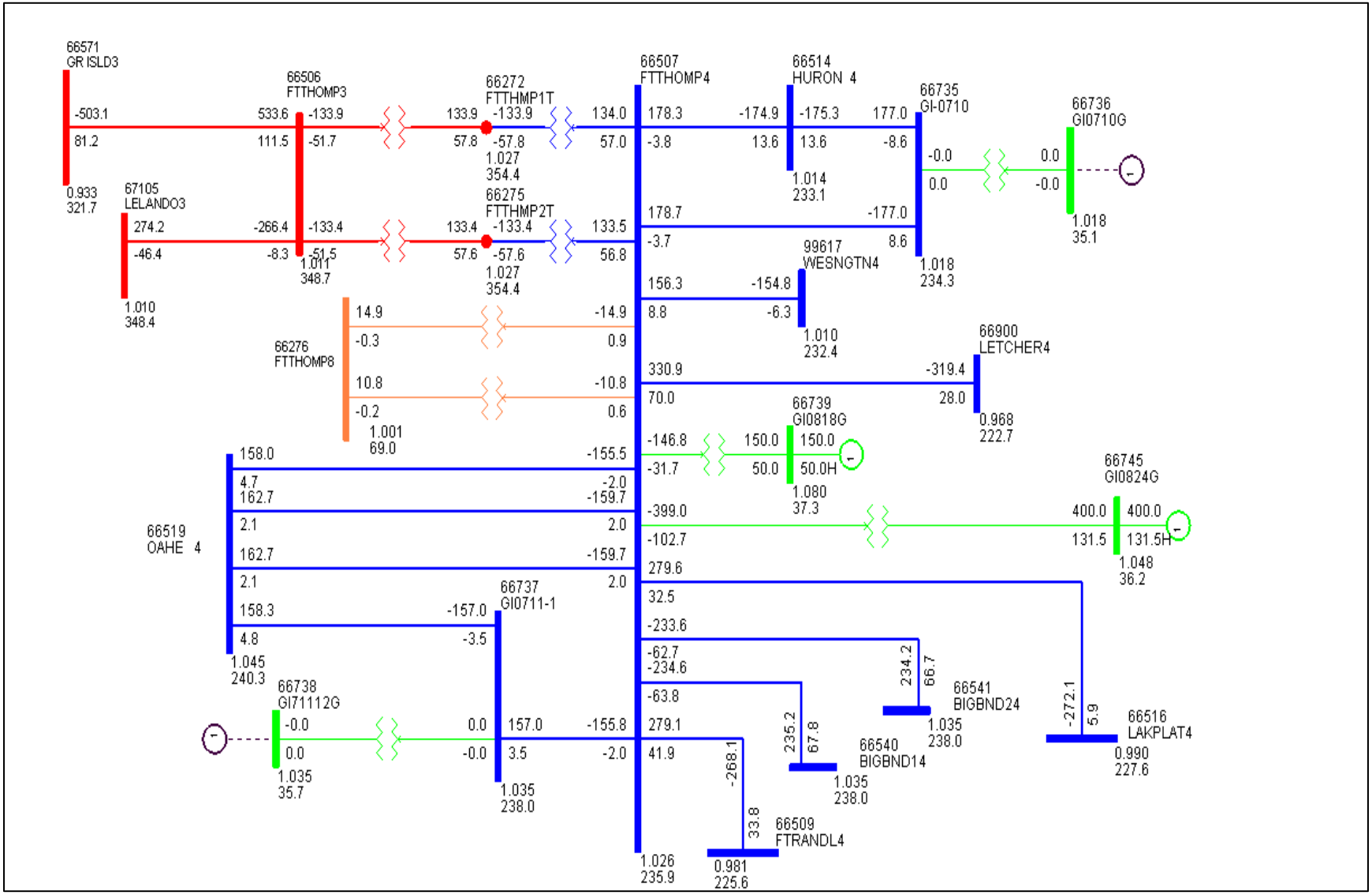

2010 Summer Off Peak WAPA Dispatch Post-Project

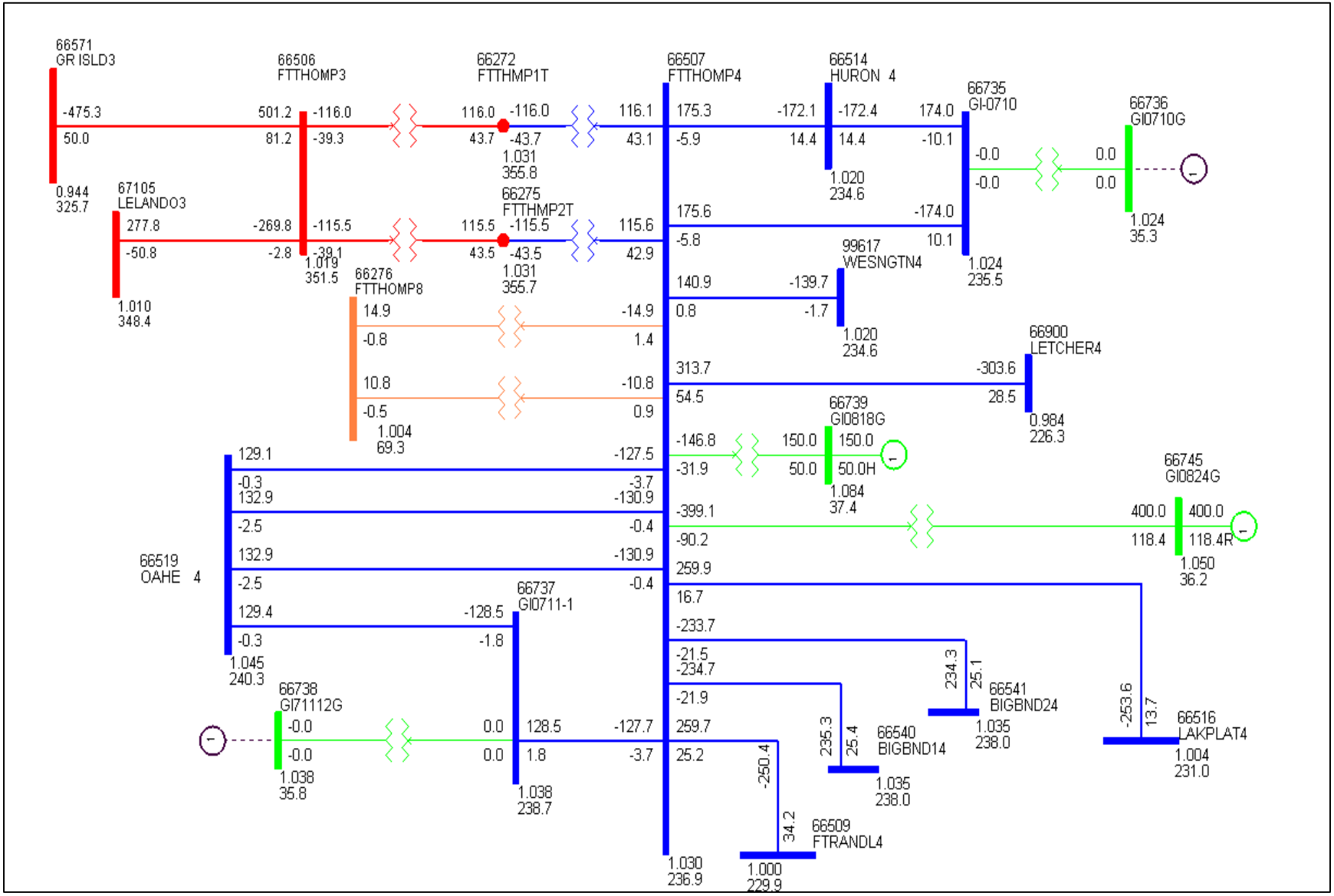

2016 Summer Peak Pre-Project

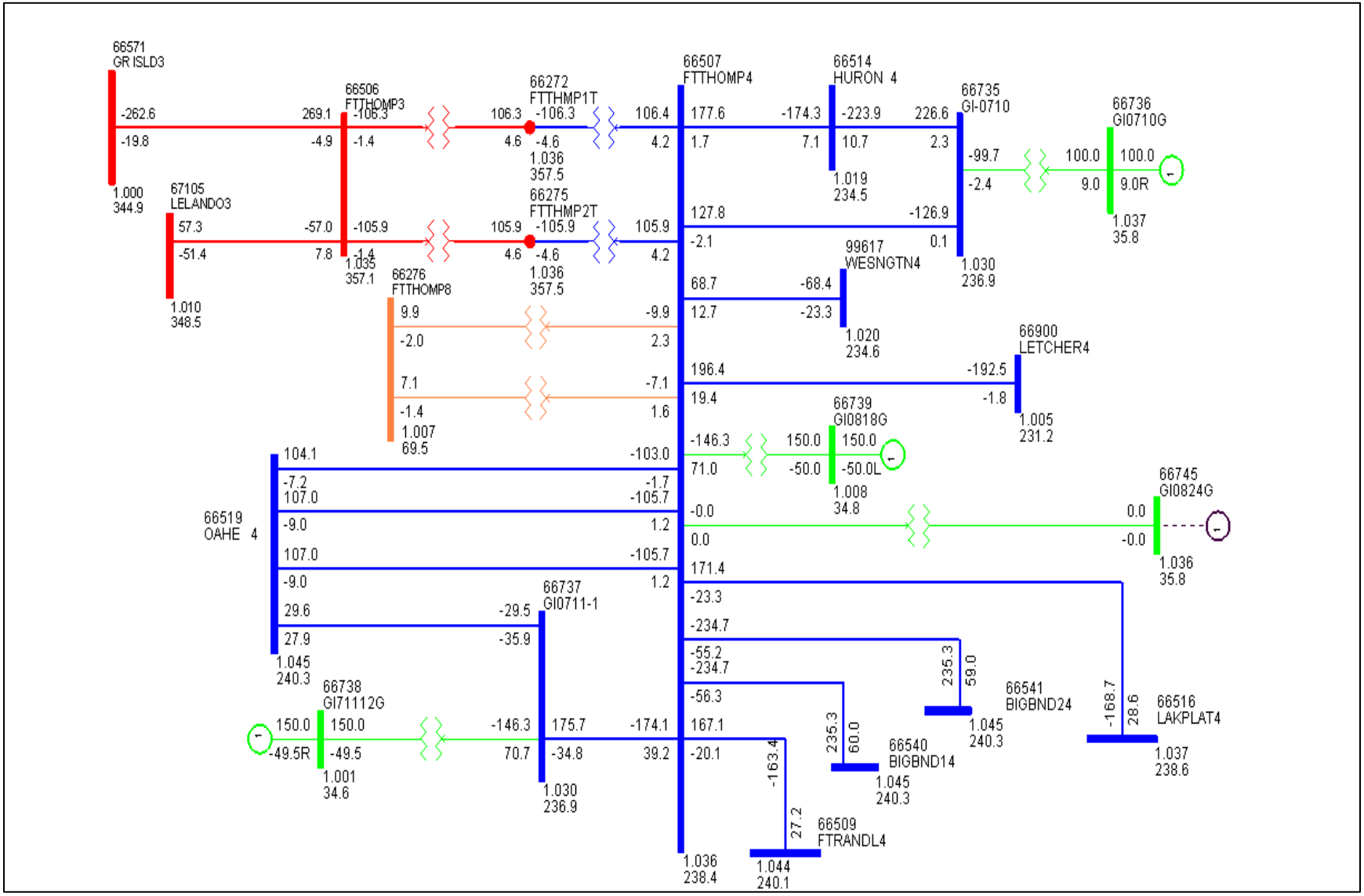

This document contains confidential and proprietary information of WAPA or TranServ International, Inc. Do not copy or distribute.

2016 Summer Peak Post-Project

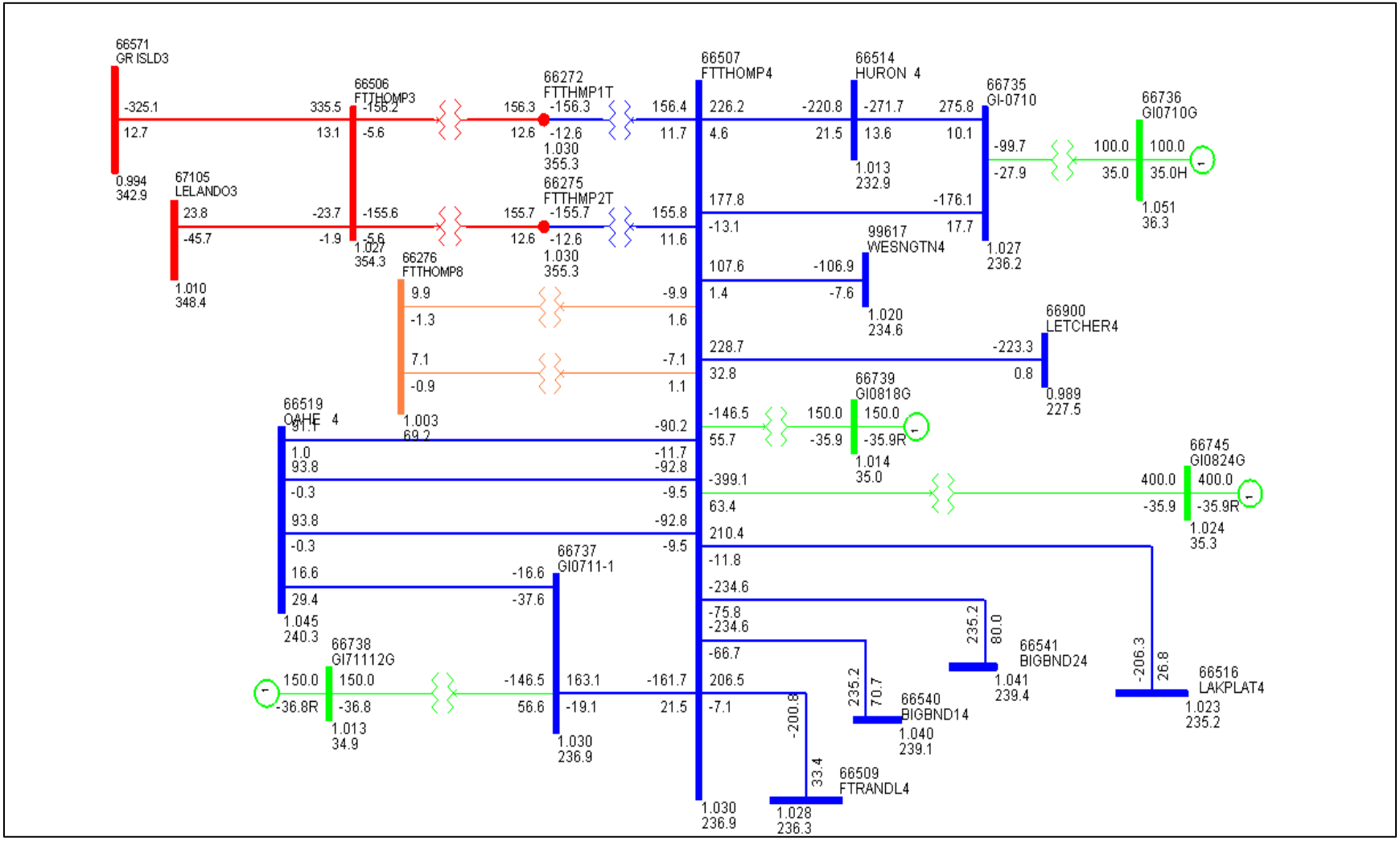

2016 Summer Peak Sensitivity Pre-Project

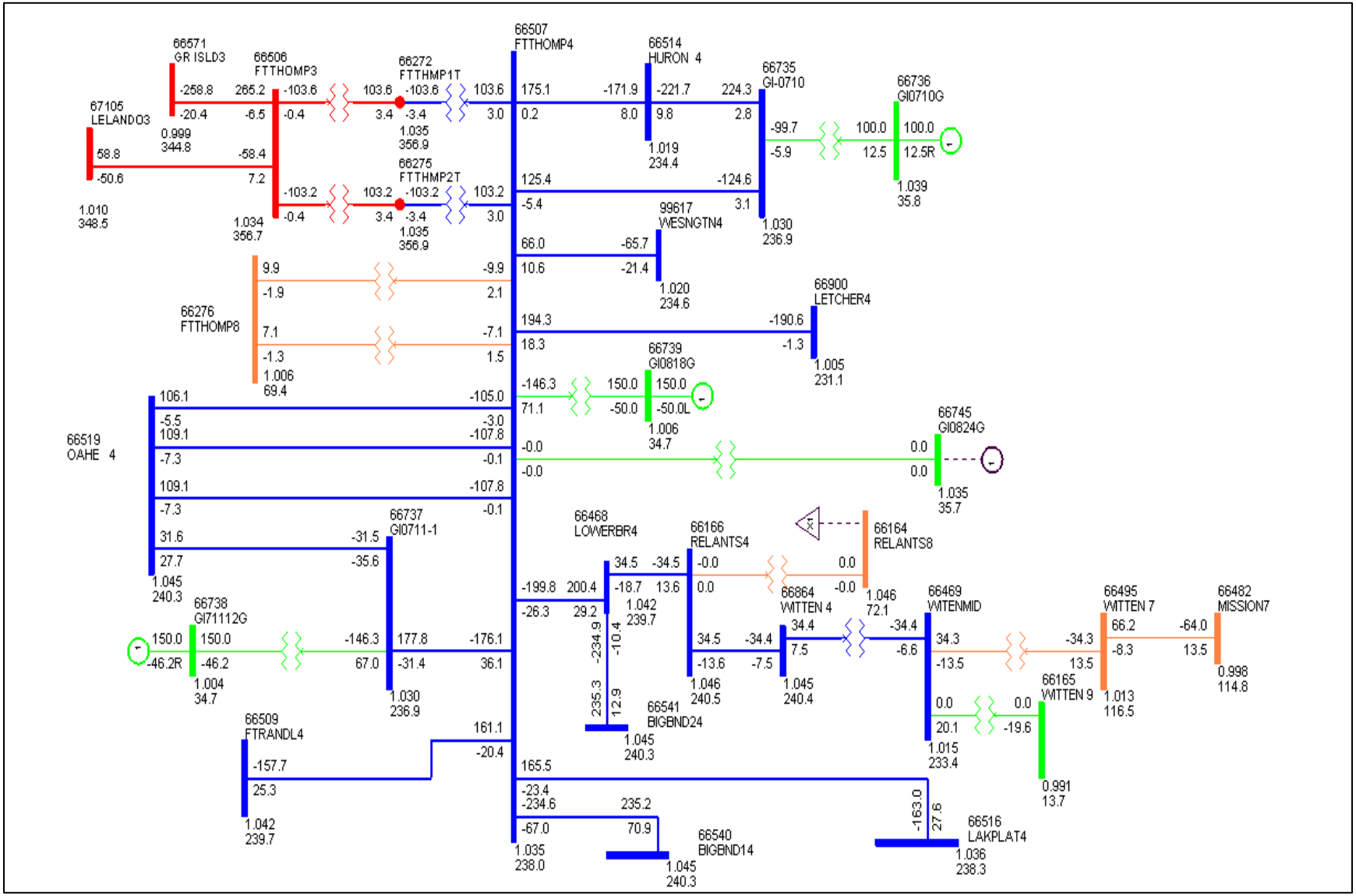

2016 Summer Peak Sensitivity Post-Project

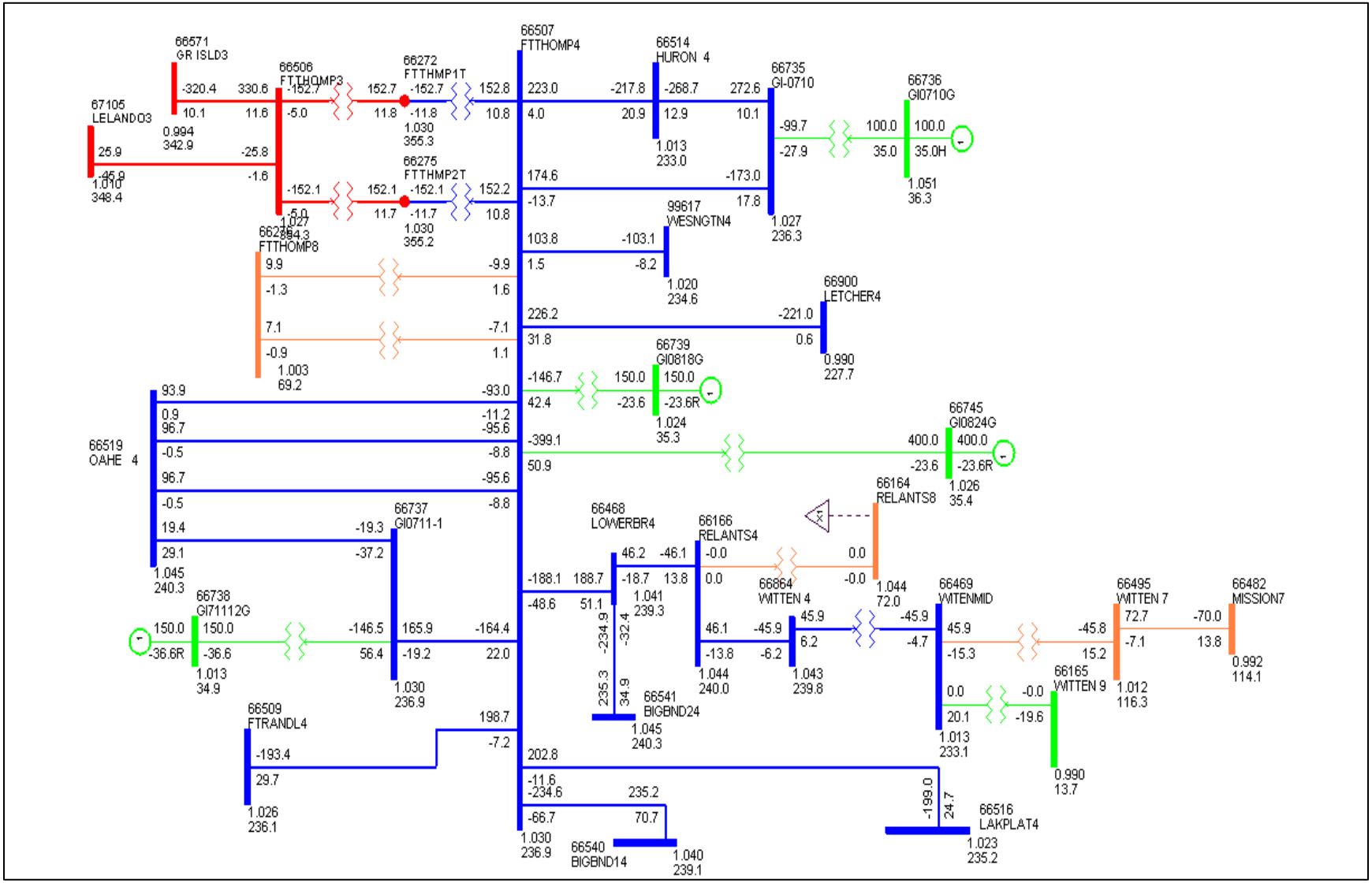

Appendix C: Steady State Detailed Analysis

Appendix C.1 2010 Summer Peak
Table C-1
2010 summer peak
South and East Dispatch
Thermal Significantly Affected Facilities – N-1 Contingency Results

Limiting Element	Rating N/E	Owner	Pre Project		Post Project		DF	Contingency
			MVA	%	MVA	%		
FTTHOMP3-FTTHOMP 345/230 kV Tx #1	250 / 313	WAPA	189.5	75.8 / 60.5	283.4	113.4 / 90.5	23.48%	FTTHOMP3-FTTHOMP 345/230 kV Tx #2
FTTHOMP3-FTTHOMP 345/230 kV Tx #2	250 / 313	WAPA	189.4	75.8 / 60.5	283.2	113.3 / 90.5	23.45%	FTTHOMP3-FTTHOMP 345/230 kV Tx #1
WATERTN4-WATERSVC 230-20 kV Tx #1	150 / 188	WAPA	79.1	52.7 / 42.1	151.9	101.3 / 80.8	18.20%	STORLA 4-WESNGTN4 230 kV Line 1
HURON 4-GI-0710 230 kV Line 1	320 / 352	WAPA	299.6	93.6 / 85.1	367.8	114.9 / 104.5	17.05%	FTTHOMP4-HURON 4 230 kV Line 2
FTTHOMP4-HURON 4 230 kV Line 2	320 / 352	WAPA	272.8	85.2 / 77.5	340.4	106.4 / 96.7	16.90%	HURON 4-GI-0710 230 kV Line 1
WATERTN4-WATERSVC 230-20 kV Tx #1	150 / 188	WAPA	86.5	57.6 / 46	153.5	102.4 / 81.6	16.75%	HANLON 4-STORLA 4 230 kV Line 1
WATERTN4-WATERSVC 230-20 kV Tx #1	150 / 188	WAPA	87.3	58.2 / 46.4	153.4	102.3 / 81.6	16.53%	160 1 - multi-circuit/tower FTRANDL4 - SIOUXCY4 230 kV line FTRANDL4 - UTICAJC4 230 kV line
WATERTN4-WATERSVC 230-20 kV Tx #1	150 / 188	WAPA	85	56.7 / 45.2	150.9	100.6 / 80.3	16.48%	WATERTN3-GROTON 3 345 kV Line 1
WATERTN4-WATERSVC 230-20 kV Tx #1	150 / 188	WAPA	87.9	58.6 / 46.8	153.4	102.3 / 81.6	16.38%	FTTHOMP3-GR ISLD3 345 kV Line 1
HURON 4-GI-0710 230 kV Line 1	320 / 352	WAPA	278.7	87.1 / 79.2	339.4	106.1 / 96.4	15.18%	130 1-Multi-terminal FTTHOMP4-SIOUXFL4 230 kV line FTTHOMP4-STORLA 4 230 kV line HANLON 4-STORLA 4 230 kV line STORLA 4-STORLA 7 230/115 kV Tx
HURON 4-GI-0710 230 kV Line 1	320 / 352	WAPA	275.2	86 / 78.2	335.1	104.7 / 95.2	14.98%	108 1 - Multi-circuit FTTHOMP4-FTRANDL4 230 kV line FTTHOMP4 -LAKE PLATTE4 230 kV line FTRANDL4-LAKE PLATTE4 230 kV line
WATERTN4-WATERSVC 230-20 kV Tx #1	150 / 188	WAPA	94.9	63.2 / 50.5	153.4	102.3 / 81.6	14.63%	130 1-Multi-terminal FTTHOMP4-SIOUXFL4 230 kV line FTTHOMP4-STORLA 4 230 kV line HANLON 4-STORLA 4 230 kV line STORLA 4-STORLA 7 230/115 kV Tx
WATERTN4-WATERSVC 230-20 kV Tx #1	150 / 188	WAPA	96.4	64.3 / 51.3	153.5	102.4 / 81.6	14.28%	FORBES 2-CHIS-N 2 500 kV Line 1

This document contains confidential and proprietary information of WAPA or TranServ International, Inc. Do not copy or distribute.

Limiting Element	Rating N/E	Owner	Pre Project		Post Project		DF	Contingency
			MVA	%	MVA	%		
WATERTN4-WATERSVC 230-20 kV Tx #1	150 / 188	WAPA	96.4	64.3 / 51.3	152	101.3 / 80.9	13.90%	CHIS CO2-CHIS-N 2 500 kV Line 1
HURON 4-GI-0710 230 kV Line 1	320 / 352	WAPA	276.7	86.5 / 78.6	332.2	103.8 / 94.4	13.88%	STORLA 4-WESNGTN4 230 kV Line 1
WATERTN4-WATERSVC 230-20 kV Tx #1	150 / 188	WAPA	100.2	66.8 / 53.3	153.4	102.2 / 81.6	13.30%	108 1 - Multi-circuit FTTHOMP4-FTRANDL4 230 kV line FTTHOMP4 -LAKE PLATTE4 230 kV line FTRANDL4-LAKE PLATTE4 230 kV line
WATERTN4-CARPNTR4 230 kV Line 1	318 / 350	WAPA	271.7	85.5 / 77.6	319	100.3 / 91.1	11.83%	HURON 4-WATERTN4 230 kV Line 2
HURON 4-CARPNTR4 230 kV Line 1	318 / 350	WAPA	281.6	88.5 / 80.5	328.9	103.4 / 94	11.83%	HURON 4-WATERTN4 230 kV Line 2
HURON 4-WATERTN4 230 kV Line 2	318 / 350	WAPA	273.3	85.9 / 78.1	320.4	100.8 / 91.5	11.78%	WATERTN4-CARPNTR4 230 kV Line 1
HURON 4-WATERTN4 230 kV Line 2	318 / 350	WAPA	277.4	87.2 / 79.3	324	101.9 / 92.6	11.65%	HURON 4-CARPNTR4 230 kV Line 1
FTRANDL4-UTICAJC4 230 kV Line 1	318 / 350	WAPA	312.5	98.3 / 89.3	355.2	111.7 / 101.5	10.68%	130 1-Multi-terminal FTTHOMP4-SIOUXFL4 230 kV line FTTHOMP4-STORLA 4 230 kV line HANLON 4-STORLA 4 230 kV line STORLA 4-STORLA 7 230/115 kV Tx
FTRANDL4-UTICAJC4 230 kV Line 1	318 / 350	WAPA	302.4	95.1 / 86.4	340.8	107.2 / 97.4	9.60%	FTRANDL4-SIOUXCY4 230 kV Line 1
FTRANDL4-UTICAJC4 230 kV Line 1	318 / 350	WAPA	287.9	90.5 / 82.3	322.9	101.5 / 92.3	8.75%	HANLON 4-STORLA 4 230 kV Line 1
FTRANDL4-UTICAJC4 230 kV Line 1	318 / 350	WAPA	290.5	91.3 / 83	325.3	102.3 / 92.9	8.70%	COLMBUS4-FTRANDL4 230 kV Line 1
LELANDO3-LELND1TY 345-345 kV Tx #1	250 / 300	WAPA	275.7	110.3 / 91.9	302.3	120.9 / 100.8	6.65%	LELANDO3-LELND2TY 345-345 kV Tx #1
LELANDO4-LELND1TY 230-345 kV Tx #1	250 / 300	WAPA	275.7	110.3 / 91.9	302.3	120.9 / 100.8	6.65%	LELANDO3-LELND2TY 345-345 kV Tx #1
LELANDO3-LELND1TY 345-345 kV Tx #1	250 / 300	WAPA	275.7	110.3 / 91.9	302.3	120.9 / 100.8	6.65%	LELANDO4-LELND2TY 230-345 kV Tx #1
LELANDO4-LELND1TY 230-345 kV Tx #1	250 / 300	WAPA	275.7	110.3 / 91.9	302.3	120.9 / 100.8	6.65%	LELANDO4-LELND2TY 230-345 kV Tx #1
STORLA 4-STORLA 7 230-115 kV Tx #1	100 / 125	WAPA	104.3	104.3 / 83.4	122.5	122.5 / 98	4.55%	140 Multi Circuit FTTHOMP4-HURON 230 kV line 2 FTTHOMP4-GI-0710 230 kV line 1
SHEYNNE4-AUDUBON4 230 kV Line 1	254 / 280	OTP	260.4	102.5 / 93	278	109.4 / 99.3	4.40%	WAHPETN4-FERGSFL4 230 kV Line 1
SHEYNNE4-AUDUBON4 230 kV Line 1	254 / 280	OTP	251.1	98.9 / 89.7	266.6	105 / 95.2	3.88%	610 1 WAHPETN4-FERGSFL4 230 kV line WAHPETN4-FRONTIER 230 kV line WAHPET1Y Tx
STORLA 4-STORLA 7 230-115 kV Tx #1	100 / 125	WAPA	127.3	127.3 / 101.8	142.4	142.4 / 113.9	3.78%	HANLON 4-SIOUXFL4 230 kV Line 1
STORLA 4-STORLA 7 230-115 kV Tx #1	100 / 125	WAPA	140.4	140.4 / 112.3	155.4	155.4 / 124.3	3.75%	HANLON 4-STORLA 4 230 kV Line 1

This document contains confidential and proprietary information of WAPA or TranServ International, Inc. Do not copy or distribute.

Limiting Element	Rating N/E	Owner	Pre Project		Post Project		DF	Contingency
			MVA	%	MVA	%		
WH SWAN7-FTRANDL7 115 kV Line 1	120 / 132	WAPA	125.3	104.4 / 94.9	138.6	115.5 / 105	3.33%	160 1 - multi-circuit/tower FTRANDL4 - SIOUXCY4 230 kV line FTRANDL4 - UTICAJC4 230 kV line
HANKSON4-WAHPETN4 230 kV Line 1	320 / 352	OTP	315	98.4 / 89.5	328.1	102.5 / 93.2	3.28%	BUFFALO3-JAMESTN3 345 kV Line 1
WH SWAN7-TYNDALL7 115 kV Line 1	120 / 132	WAPA	122.6	102.2 / 92.9	135.7	113.1 / 102.8	3.28%	160 1 - multi-circuit/tower FTRANDL4 - SIOUXCY4 230 kV line FTRANDL4 - UTICAJC4 230 kV line
STORLA 4-STORLA 7 230-115 kV Tx #1	100 / 125	WAPA	94	94 / 75.2	106.8	106.8 / 85.4	3.20%	108 1 - Multi-circuit FTTHOMP4-FTRANDL4 230 kV line FTTHOMP4 -LAKE PLATTE4 230 kV line FTRANDL4-LAKE PLATTE4 230 kV line
HANKSON4-WAHPETN4 230 kV Line 1	320 / 352	OTP	313	97.8 / 88.9	325.7	101.8 / 92.5	3.18%	220 - Multi terminal BUFFALO3 345 63369 JAMESTN3 BUFFALO3- MAPLE R3 345 kV line BUFFALOY Tx MAPLER1Y Tx MAPLER2Y Tx
HANKSON4-WAHPETN4 230 kV Line 1	320 / 352	OTP	312.8	97.7 / 88.9	325.3	101.7 / 92.4	3.13%	BUFFALO3-MAPLE R3 345 kV Line 1

This document contains confidential and proprietary information of WAPA or TranServ International, Inc. Do not copy or distribute.

Table C-2
2010 Summer Peak
South and East
Voltage Significantly Affected Facilities – System Intact Results

BUS/NAME		KV	Owner	Pre Project	Post Project	Delta Volt %	Contingency
64806	E.COL. 4	230	NPPD	0.9458	0.9237	-2.210%	System Intact
65022	KELLY 7	115	NPPD	0.9626	0.9406	-2.200%	System Intact
64783	COLMBUS4	230	NPPD	0.9485	0.9266	-2.190%	System Intact
64780	COLMB.W4	230	NPPD	0.9488	0.9276	-2.120%	System Intact
64859	HOSKINS4	230	NPPD	0.9678	0.9475	-2.030%	System Intact
66463	WH SWAN7	115	WAPA	1.0092	0.9924	-1.680%	System Intact
66510	FTRANDL7	115	WAPA	1.0093	0.9926	-1.670%	System Intact
66832	KYPMP 22	115	WAPA	0.9907	0.9743	-1.640%	System Intact
66901	LETCHER7	115	WAPA	0.9972	0.981	-1.620%	System Intact
66900	LETCHER4	230	WAPA	0.9998	0.9837	-1.610%	System Intact
66277	LAKE PLATTE8	69	WAPA	1.0151	0.9996	-1.550%	System Intact
66526	UTICAJC4	230	WAPA	1.007	0.9919	-1.510%	System Intact
66525	TYNDALL7	115	WAPA	1.0016	0.9869	-1.470%	System Intact
66286	TYNDALL8	69	WAPA	1.0071	0.9926	-1.450%	System Intact
66501	ARMOUR 7	115	WAPA	1.0069	0.9928	-1.410%	System Intact
66249	ARMOUR 8	69	WAPA	0.9998	0.9858	-1.400%	System Intact
66833	KYPMPS23	115	WAPA	1.0041	0.9912	-1.290%	System Intact
66902	UTICAJC7	115	WAPA	1.0119	0.9991	-1.280%	System Intact
67409	MENNOJT7	115	WAPA	1.0108	0.9985	-1.230%	System Intact
67406	TRIPP 7	115	WAPA	1.0057	0.9941	-1.160%	System Intact
66278	HANLON18	69	WAPA	0.9753	0.9641	-1.120%	System Intact
66279	HANLON28	69	WAPA	0.9757	0.9646	-1.110%	System Intact
66513	HANLON 4	230	WAPA	0.9934	0.9823	-1.110%	System Intact
66536	RASMUSN4	230	WAPA	1.0068	0.9959	-1.090%	System Intact
66475	BONESTL7	115	WAPA	1.0075	0.9967	-1.080%	System Intact
66399	VFODNES8	69	WAPA	0.9779	0.9676	-1.030%	System Intact
66398	VFODNES4	230	WAPA	0.9995	0.9894	-1.010%	System Intact

This document contains confidential and proprietary information of WAPA or TranServ International, Inc. Do not copy or distribute.

Table C-3
2010 Summer Peak
South and East
Voltage Significantly Affected Facilities – N-1 Contingency Results

BUS/NAME		KV	Owner	Pre Project	Post Project	Delta Volt %	Contingency	
64806	E.COL. 4	230	NPPD	0.9134	0.8913	-2.210%	160	1
64783	COLMBUS4	230	NPPD	0.916	0.8933	-2.270%	160	1
64780	COLMB.W4	230	NPPD	0.9177	0.8954	-2.230%	160	1

This document contains confidential and proprietary information of WAPA or TranServ International, Inc. Do not copy or distribute.

Appendix C.2 2010 Summer Off Peak

Table C-4
2010 Summer Off Peak
South and East Dispatch
Thermal Significantly Affected Facilities – System Intact Results

Limiting Element	Rating N/E	Owner	Pre Project		Post Project		DF	Contingency
			MVA	%	MVA	%		
ROSEAUN2-DORSEY 500 kV line	1732 / 1905	XEL / MH	1907.4	110.1	1937.5	111.9	7.52%	System Intact
ROSEAUN2-ROSEAUS2 500 kV line	1732 / 1905	XEL	1843	106.4	1873.1	108.1	7.52%	System Intact
MNVLTAP4-GRANITF 230 kV line	388 / 427	XEL / WAPA	368.6	95	396.7	102.3	7.02%	System Intact

Table C-5
2010 Summer Off Peak
South and East Dispatch
Thermal Significantly Affected Facilities – N-1 Contingency Results

Limiting Element	Rating N/E	Owner	Pre Project		Post Project		DF	Contingency
			MVA	%	MVA	%		
FTTHOMP4-FTTHOMP3 230-345 kV Tx #2	250 / 313	WAPA	179.8	71.9 / 57.4	266	106.4 / 85	21.55%	FTTHMP1T-FTTHOMP4 345-230 kV Tx #1
FTTHOMP4-FTTHOMP3 230-345 kV Tx #1	250 / 313	WAPA	180	72 / 57.5	266.2	106.5 / 85	21.55%	FTTHMP2T-FTTHOMP3 345-345 kV Tx #2
LAKEFLD3-LKFLDXL3 345 kV Line 1	825 / 907	ALTW / XEL	806	97.7 / 88.9	881	106.8 / 97.1	18.75%	110 1
LAKEFLD3-LKFLDXL3 345 kV Line 1	825 / 907	ALTW / XEL	798.6	96.8 / 88	872.4	105.7 / 96.2	18.45%	110 2
LAKEFLD3-LKFLDXL3 345 kV Line 1	825 / 907	ALTW / XEL	788.6	95.6 / 86.9	862.1	104.5 / 95	18.38%	795
LAKEFLD3-LKFLDXL3 345 kV Line 1	825 / 907	ALTW / XEL	805.5	97.6 / 88.8	878.1	106.4 / 96.8	18.15%	961
LAKEFLD3-LKFLDXL3 345 kV Line 1	825 / 907	ALTW / XEL	784.8	95.1 / 86.5	857.3	103.9 / 94.5	18.13%	MNVLTAP4-PANTHER4 230 kV Line 1
SPLT RK4-SPLT RK7 230-115 kV Tx #7	336 / 437	XEL	302.6	90.1 / 69.2	374.8	111.6 / 85.8	18.05%	121
STORLA 4-WESNGTN4 230 kV Line 1	480 / 520	WAPA	453.8	94.5 / 87.3	523.4	109.1 / 100.7	17.40%	108 1
SPLT RK4-SPLT RK7 230-115 kV Tx #7	336 / 437	XEL	310.3	92.3 / 71	376.1	111.9 / 86.1	16.45%	EAGLE 4-PAHOJA 4 230 kV Line 1
SPLT RK4-SPLT RK7 230-115 kV Tx #7	336 / 437	XEL	322.1	95.9 / 73.7	387.4	115.3 / 88.6	16.33%	SIOUXFL4-PAHOJA 4 230 kV Line 1
SPLT RK4-SIOUXFL4 230 kV Line 1	386 / 425	XEL / WAPA	377.2	97.7 / 88.8	439	113.7 / 103.3	15.45%	SPLTRTA3-WHITE 3 345 kV Line 1
SPLT RK4-SIOUXFL4 230 kV Line 1	386 / 425	XEL / WAPA	376.8	97.6 / 88.7	438.5	113.6 / 103.2	15.43%	SPLT RK3-SPLTRTA3 345 kV Line 1
MCCOOL 3-GR ISLD3 345 kV Line 1	717 / 789	NPPD	780.8	108.9 / 99	841	117.3 / 106.6	15.05%	MINGO 7-REDWILO3 345 kV Line 1

This document contains confidential and proprietary information of WAPA or TranServ International, Inc. Do not copy or distribute.

Limiting Element	Rating N/E	Owner	Pre Project		Post Project		DF	Contingency
			MVA	%	MVA	%		
HURON 4-WATERTN4 230 kV Line 2	318 / 350	WAPA	306.6	96.4 / 87.6	363.9	114.4 / 104	14.33%	HURON 4-CARPNTR4 230 kV Line 1
HURON 4-CARPNTR4 230 kV Line 1	318 / 350	WAPA	310.9	97.8 / 88.8	368.1	115.8 / 105.2	14.30%	HURON 4-WATERTN4 230 kV Line 2
WATERTN4-CARPNTR4 230 kV Line 1	318 / 350	WAPA	301.1	94.7 / 86	358.3	112.7 / 102.4	14.30%	HURON 4-WATERTN4 230 kV Line 2
FTTHOMP4-FTRANDL4 230 kV Line 1	320 / 352	WAPA	327.8	102.4 / 93.1	384.8	120.3 / 109.3	14.25%	FTTHOMP4-LAKE PLATTE4 230 kV Line 1
HURON 4-WATERTN4 230 kV Line 2	318 / 350	WAPA	302.4	95.1 / 86.4	359.3	113 / 102.7	14.23%	WATERTN4-CARPNTR4 230 kV Line 1
FTTHOMP4-LAKE PLATTE4 230 kV Line 1	318 / 351	WAPA	325.5	102.4 / 92.7	382.4	120.2 / 108.9	14.23%	FTTHOMP4-FTRANDL4 230 kV Line 1
FTTHOMP4-FTRANDL4 230 kV Line 1	320 / 352	WAPA	304.3	95.1 / 86.4	361.1	112.9 / 102.6	14.20%	130 1
FTRANDL4-LAKE PLATTE4 230 kV Line 1	318 / 351	WAPA	317.1	99.7 / 90.3	373.9	117.6 / 106.5	14.20%	FTTHOMP4-FTRANDL4 230 kV Line 1
FTTHOMP4-FTRANDL4 230 kV Line 1	320 / 352	WAPA	323.7	101.1 / 92	380.4	118.9 / 108.1	14.18%	FTRANDL4-LAKE PLATTE4 230 kV Line 1
FTTHOMP4-LAKE PLATTE4 230 kV Line 1	318 / 351	WAPA	303.6	95.5 / 86.5	359.1	112.9 / 102.3	13.88%	130 1
FTRANDL4-LAKE PLATTE4 230 kV Line 1	318 / 351	WAPA	295.2	92.8 / 84.1	350.3	110.1 / 99.8	13.78%	130 1
CHIS CO2-CHIS-N 2 500 kV Line 1	1732 / 2165	XEL	1675.1	96.7 / 52.2 / 77.4	1729.9	99.9 / 53.9 / 79.9	13.70%	FTTHOMP3-GR ISLD3 345-345 kV Tx #9
MCCOOL 3-GR ISLD3 345 kV Line 1	717 / 789	NPPD	736.8	102.8 / 93.4	789.8	110.2 / 100.1	13.25%	MOORE 3-PAULINE3 345 kV Line 1
SPLTRTA3-WHITE 3 345 kV Line 1	720 / 792	XEL / WAPA	727.8	101.1 / 91.9	780.7	108.4 / 98.6	13.23%	130 1
HURON 4-CARPNTR4 230 kV Line 1	318 / 350	WAPA	266.5	83.8 / 76.1	318.3	100.1 / 90.9	12.95%	108 1
HANLON 4-SIOUXFL4 230 kV Line 1	320 / 352	WAPA	331.9	103.7 / 94.3	383.5	119.8 / 108.9	12.90%	108 1
CHIS CO2-CHIS-N 2 500 kV Line 1	1732 / 2165	XEL	1737.9	100.3 / 80.3	1789.5	103.3 / 82.7	12.90%	652
CHIS CO2-CHIS-N 2 500 kV Line 1	1732 / 2165	XEL	1742.5	100.6 / 80.5	1794	103.6 / 82.9	12.88%	MUDLAKE4-BENTON 4 230 kV Line 1
MCCOOL 3-GR ISLD3 345 kV Line 1	717 / 789	NPPD	679.7	94.8 / 86.1	730.8	101.9 / 92.6	12.78%	GENTLMN3-REDWILO3 345 kV Line 1
FTRANDL4-UTICAJC4 230 kV Line 1	318 / 350	WAPA	365.7	115 / 104.5	416.7	131 / 119.1	12.75%	130 1
HANLON 4-SIOUXFL4 230 kV Line 1	320 / 352	WAPA	340.9	106.5 / 96.8	391.4	122.3 / 111.2	12.63%	160 1
SPLT RK4-SPLT RK7 230-115 kV Tx #7	336 / 437	XEL	383.7	114.2 / 87.8	434.1	129.2 / 99.3	12.60%	SPLT RK3-SPLTRTA3 345 kV Line 1
SPLTRTA3-WHITE 3 345 kV Line 1	720 / 792	XEL / WAPA	773.2	107.4 / 97.6	823.4	114.4 / 104	12.55%	110 1
SPLT RK4-SPLT RK7 230-115 kV Tx #7	336 / 437	XEL	384.3	114.4 / 87.9	434.1	129.2 / 99.3	12.45%	SPLTRTA3-WHITE 3 345 kV Line 1
SPLTRTA3-WHITE 3 345 kV Line 1	720 / 792	XEL / WAPA	714	99.2 / 90.2	763.2	106 / 96.4	12.30%	108 1
MCCOOL 3-GR ISLD3 345 kV Line 1	717 / 789	NPPD	710.7	99.1 / 90.1	759.9	106 / 96.3	12.30%	AXTELL 3-PAULINE3 345 kV Line 1
FTTHOMP4-FTRANDL4 230 kV Line 1	320 / 352	WAPA	283.6	88.6 / 80.6	332.3	103.8 / 94.4	12.18%	STORLA 4-WESNGTN4 230 kV Line 1
SIOUXFL4-LETCHER4 230 kV Line 1	320 / 352	WAPA	275.2	86 / 78.2	323.6	101.1 / 91.9	12.10%	108 1
HANLON 4-SIOUXFL4 230 kV Line 1	320 / 352	WAPA	329.2	102.9 / 93.5	377.6	118 / 107.3	12.10%	FTTHOMP4-LETCHER4 230 kV Line 1
MCCOOL 3-GR ISLD3 345 kV Line 1	717 / 789	NPPD	720.9	100.5 / 91.4	769.2	107.3 / 97.5	12.08%	AXTELL 3-SWEET W3 345 kV Line 1
FTTHOMP4-LAKE PLATTE4 230 kV Line 1	318 / 351	WAPA	282.8	88.9 / 80.6	331	104.1 / 94.3	12.05%	STORLA 4-WESNGTN4 230 kV Line 1
CHIS CO2-CHIS-N 2 500 kV Line 1	1732 / 2165	XEL	1897	109.5 / 87.6	1944.7	112.3 / 89.8	11.93%	AWHD PST-ARROWHD4 230-230 kV Tx #1

This document contains confidential and proprietary information of WAPA or TranServ International, Inc. Do not copy or distribute.

Limiting Element	Rating N/E	Owner	Pre Project		Post Project		DF	Contingency
			MVA	%	MVA	%		
FTRANDL4-LAKE PLATTE4 230 kV Line 1	318 / 351	WAPA	274.5	86.3 / 78.2	322.2	101.3 / 91.8	11.93%	STORLA 4-WESNGTN4 230 kV Line 1
FTTHOMP4-LAKE PLATTE4 230 kV Line 1	318 / 351	WAPA	273.7	86.1 / 78	320.2	100.7 / 91.2	11.63%	NSP - 1
HURON 4-CARPNTR4 230 kV Line 1	318 / 350	WAPA	305.1	95.9 / 87.2	350.8	110.3 / 100.2	11.43%	WATERTN3-GROTON 3 345 kV Line 1
WATERTN4-CARPNTR4 230 kV Line 1	318 / 350	WAPA	295.1	92.8 / 84.3	340.6	107.1 / 97.3	11.38%	WATERTN3-GROTON 3 345 kV Line 1
HANLON 4-SIOUXFL4 230 kV Line 1	320 / 352	WAPA	325.3	101.6 / 92.4	370.8	115.9 / 105.3	11.38%	121
CHISAGO7-WYOMING7 115 kV Line 1	318 / 350	XEL	287.9	90.5 / 82.3	333.4	104.8 / 95.3	11.38%	022 1
HURON 4-WATERTN4 230 kV Line 2	318 / 350	WAPA	298	93.7 / 85.1	343.3	108 / 98.1	11.33%	WATERTN3-GROTON 3 345 kV Line 1
SPLTRTA3-WHITE 3 345 kV Line 1	720 / 792	XEL / WAPA	748.9	104 / 94.6	793.8	110.2 / 100.2	11.23%	110 2
ROSEAUN2-ROSEAUS2 500 kV Line 1	1732 / 1905	XEL	1961.2	113.2 / 103	2006	115.8 / 105.3	11.20%	FTTHOMP3-GR ISLD3 345-345 kV Tx #7
ROSEAUN2-DORSEY 2 500 kV Line 1	1732 / 1905	XEL / MH	1961.2	113.2 / 83.0 / 103	2006	115.8 / 84.9 / 105.3	11.20%	FTTHOMP3-GR ISLD3 345-345 kV Tx #8
FTTHOMP4-FTRANDL4 230 kV Line 1	320 / 352	WAPA	305.9	95.6 / 64.0 / 86.9	350.3	109.5 / 73.3 / 99.5	11.10%	FTTHOMP3-GR ISLD3 345-345 kV Tx #24
SIOUXFL4-LETCHER4 230 kV Line 1	320 / 352	WAPA	279.2	87.3 / 79.3	323.5	101.1 / 91.9	11.08%	HANLON 4-STORLA 4 230 kV Line 1
ROSEAUN2-DORSEY 2 500 kV Line 1	1732 / 1905	XEL / MH	1954.1	112.8 / 102.6	1997.9	115.3 / 104.9	10.95%	ALTW-26
FTTHOMP4-LAKE PLATTE4 230 kV Line 1	318 / 351	WAPA	304.7	95.8 / 76.6 / 86.8	348.4	109.6 / 87.5 / 99.3	10.93%	FTTHOMP3-GR ISLD3 345-345 kV Tx #25
GOOSELK7-MNPIP 7 115 kV Line 1	203	XEL	233.6	115.1	276.8	136.4	10.80%	022 1
CHIS CO2-CHIS-N 2 500 kV Line 1	1732 / 2165	XEL	1731.8	100 / 80	1774.9	102.5 / 82	10.78%	907 1
ROSEAUN2-ROSEAUS2 500 kV Line 1	1732 / 1905	XEL	1888.4	109 / 99.1	1931.2	111.5 / 101.4	10.70%	WILMART3-FIELD_S3 345 kV Line 1
FTRANDL4-UTICAJC4 230 kV Line 1	318 / 350	WAPA	353.1	111 / 100.9	395.9	124.5 / 113.1	10.70%	FTRANDL4-SIOUXCY4 230 kV Line 1
COLMBUS4-FTRANDL4 230 kV Line 1	320 / 352	NPPD / WAPA	338.7	105.8 / 96.2	380.6	118.9 / 108.1	10.48%	160 1
FTRANDL4-UTICAJC4 230 kV Line 1	318 / 350	WAPA	327.2	102.9 / 93.5	368	115.7 / 105.1	10.20%	HANLON 4-STORLA 4 230 kV Line 1
ROSEAUN2-DORSEY 2 500 kV Line 1	1732 / 1905	XEL / MH	2053.3	118.5 / 107.8	2093.7	120.9 / 109.9	10.10%	ROSEAU 4-MORANVI4 230 kV Line 1
ROSEAUN2-ROSEAUS2 500 kV Line 1	1732 / 1905	XEL	1984.5	114.6 / 104.2	2024.2	116.9 / 106.3	9.93%	ROSEAU 4-MORANVI4 230 kV Line 1
ROSEAUN2-DORSEY 2 500 kV Line 1	1732 / 1905	XEL / MH	2055.9	118.7 / 107.9	2095.3	121 / 110	9.85%	ROSEAU 4-RICHER 4 230 kV Line 1
HURON 4-CARPNTR4 230 kV Line 1	318 / 350	WAPA	268.4	84.4 / 61.0 / 76.7	307.8	96.8 / 70.0 / 87.9	9.85%	FTTHOMP3-GR ISLD3 345-345 kV Tx #30
FTRANDL4-UTICAJC4 230 kV Line 1	318 / 350	WAPA	336.4	105.8 / 96.1	375.3	118 / 107.2	9.73%	COLMBUS4-FTRANDL4 230 kV Line 1
ROSEAUN2-ROSEAUS2 500 kV Line 1	1732 / 1905	XEL	1987.1	114.7 / 104.3	2025.8	117 / 106.3	9.68%	ROSEAU 4-RICHER 4 230 kV Line 1
CHIS CO3-CHIS D2Y 345-110 kV Tx #9	1203 / 1564	XEL	1614.4	134.2 / 103.2	1651.7	137.3 / 105.6	9.32%	CHIS CO2-CHIS D1Y 500-110 kV Tx #10
CHIS CO3-CHIS D1Y 345-110 kV Tx #10	1203 / 1564	XEL	1614.4	134.2 / 103.2	1651.7	137.3 / 105.6	9.32%	CHIS CO2-CHIS D2Y 500-110 kV Tx #9
FTRANDL4-SIOUXCY4 230 kV Line 1	319 / 351	WAPA	297.9	93.4 / 84.9	335	105 / 95.4	9.28%	FTRANDL4-UTICAJC4 230 kV Line 1
CHIS CO3-CHIS D2Y 345-110 kV Tx #9	1203 / 1564	XEL	1605.7	133.5 / 102.7	1642.7	136.5 / 105	9.25%	CHIS CO3-CHIS D1Y 345-110 kV Tx #10
CHIS CO3-CHIS D1Y 345-110 kV Tx #10	1203 / 1564	XEL	1605.7	133.5 / 102.7	1642.7	136.5 / 105	9.25%	CHIS CO3-CHIS D2Y 345-110 kV Tx #9
CHIS CO2-CHIS D2Y 500-110 kV Tx #9	1200 / 1560	XEL	1620	135 / 103.8	1657	138.1 / 106.2	9.25%	CHIS CO2-CHIS D1Y 500-110 kV Tx #10

This document contains confidential and proprietary information of WAPA or TranServ International, Inc. Do not copy or distribute.

Limiting Element	Rating N/E	Owner	Pre Project		Post Project		DF	Contingency
			MVA	%	MVA	%		
CHIS CO2-CHIS D1Y 500-110 kV Tx #10	1203 / 1564	XEL	1620	134.7 / 103.6	1657	137.7 / 105.9	9.25%	CHIS CO2-CHIS D2Y 500-110 kV Tx #9
CHIS CO2-CHIS D2Y 500-110 kV Tx #9	1200 / 1560	XEL	1610.6	134.2 / 103.2	1647.5	137.3 / 105.6	9.23%	CHIS CO3-CHIS D1Y 345-110 kV Tx #10
CHIS CO2-CHIS D1Y 500-110 kV Tx #10	1203 / 1564	XEL	1610.6	133.9 / 103	1647.5	136.9 / 105.3	9.23%	CHIS CO3-CHIS D2Y 345-110 kV Tx #9
FTTHOMP4-FTTHOMP3 230-345 kV Tx #1	250 / 313	WAPA	221.3	88.5 / 70.7	256.2	102.5 / 81.9	8.72%	FTTHOMP3-LELANDO3 345 kV Line 1
CHIS CO3-KOLMNLK3 345 kV Line 1	1165 / 1281	XEL	1287.7	110.5 / 100.5	1322.6	113.5 / 103.2	8.72%	AS KING3-CHIS CO3 345 kV Line 1
FTTHOMP4-FTTHOMP3 230-345 kV Tx #2	250 / 313	WAPA	220.4	88.2 / 70.4	255.2	102.1 / 81.5	8.70%	FTTHOMP3-LELANDO3 345 kV Line 1
MNVLTAP4-GRANITF4 230 kV Line 1	388 / 427	XEL / WAPA	440	113.4 / 103	474.3	122.2 / 111.1	8.58%	500
MNVLTAP4-GRANITF4 230 kV Line 1	388 / 427	XEL / WAPA	436.2	112.4 / 102.2	470.4	121.2 / 110.2	8.55%	NSP - 1
COLMBUS4-FTRANDL4 230 kV Line 1	320 / 352	NPPD / WAPA	292.5	91.4 / 83.1	326.6	102.1 / 92.8	8.53%	160 2
MNVLTAP4-GRANITF4 230 kV Line 1	388 / 427	XEL / WAPA	438.1	112.9 / 102.6	472	121.7 / 110.5	8.47%	WILLMAR4-GRANITF4 230 kV Line 1
AS KING3-CHIS CO3 345 kV Line 1	1166 / 1195	XEL	1291	110.7 / 108	1324.7	113.6 / 110.9	8.43%	CHIS CO3-KOLMNLK3 345 kV Line 1
AS KING3-CHIS CO3 345 kV Line 1	1166 / 1195	XEL	1282.9	110 / 107.4	1316.4	112.9 / 110.2	8.38%	NSP 2B
EAGLE 4-PAHOJA 4 230 kV Line 1	320 / 352	WAPA	305.3	95.4 / 86.7	338.4	105.8 / 96.1	8.27%	160 2
MNVLTAP4-GRANITF4 230 kV Line 1	388 / 427	XEL / WAPA	434.3	111.9 / 101.7	466.6	120.3 / 109.3	8.08%	SPLTRTA3-WHITE 3 345 kV Line 1
MNVLTAP4-GRANITF4 230 kV Line 1	388 / 427	XEL / WAPA	434.3	111.9 / 101.7	466.4	120.2 / 109.2	8.02%	SPLT RK3-SPLTRTA3 345 kV Line 1
BLAIR 4-GRANITF4 230 kV Line 1	398 / 425	WAPA	389.1	97.8 / 91.6	419.9	105.5 / 98.8	7.70%	WATERTN4-GRANITF4 230 kV Line 1
AS KING3-CHIS CO3 345 kV Line 1	1166 / 1195	XEL	1254.2	107.6 / 105	1284.6	110.2 / 107.5	7.60%	NSP 1B
MCLEOD 4-PANTHER4 230 kV Line 1	319	XEL	339.8	106.5	370.1	116	7.58%	WILMART3-FIELD_S3 345 kV Line 1
MCLEOD 4-PANTHER4 230 kV Line 1	319	XEL	339.8	106.5	370.1	116	7.58%	LKFLDXL3-FIELD_N3 345 kV Line 1
MCLEOD 4-PANTHER4 230 kV Line 1	319	XEL	339.6	106.5	369.9	116	7.57%	FIELD_N3-FIELD_S3 345 kV Line 1
MCLEOD 4-PANTHER4 230 kV Line 1	319	XEL	340.1	106.6	370.3	116.1	7.55%	ALTW-26
WILLMAR4-GRANITF4 230 kV Line 1	240	GRE / WAPA	253.6	105.7	283.1	118	7.38%	ALTW-26
CHIS CO3-KOLMNLK3 345 kV Line 1	1165 / 1281	XEL	1160	99.6 / 90.6	1188.7	102 / 92.8	7.18%	NSP 1C
CHIS CO3-KOLMNLK3 345 kV Line 1	1165 / 1281	XEL	1150.4	98.7 / 89.8	1179	101.2 / 92	7.15%	NSP 1D
CHIS CO3-KOLMNLK3 345 kV Line 1	1165 / 1281	XEL	1162.3	99.8 / 90.7	1190.8	102.2 / 93	7.13%	NSP 2C
CHIS CO3-KOLMNLK3 345 kV Line 1	1165 / 1281	XEL	1152.8	98.9 / 90	1180.7	101.3 / 92.2	6.98%	NSP 2D
STORLA 4-WESNGTN4 230 kV Line 1	480 / 520	WAPA	410.7	85.6 / 79.0 / 79	438.6	91.4 / 84.3 / 84.3	6.98%	FTTHOMP3-GR ISLD3 345-345 kV Tx #38
ST JOE 3-COOPER 3 345 kV Line 1	956	MIPU / NPPD	972	101.7	998.8	104.5	6.70%	COOPER 3-7FAIRPT 345 kV Line 1
SHEYNNE4-AUDUBON4 230 kV Line 1	254 / 280	OTP	396	155.9 / 141.4	421.3	165.9 / 150.5	6.33%	WAHPETN4-FERGSFL4 230 kV Line 1
FTRANDL4-LAKE PLATTE4 230 kV Line 1	318 / 351	WAPA	279.3	87.8 / 70.2 / 79.6	304.6	95.8 / 76.5 / 86.8	6.33%	FTTHOMP3-GR ISLD3 345-345 kV Tx #27
WILLMAR4-GRANITF4 230 kV Line 1	240	GRE / WAPA	291.7	121.5	315.4	131.4	5.93%	795
SPLTRTA3-WHITE 3 345 kV Line 1	720 / 792	XEL / WAPA	698.4	97.0 / 53.4 / 88.2	721.4	100.2 / 55.2 / 91.1	5.75%	FTTHOMP3-GR ISLD3 345-345 kV Tx #2
SHEYNNE4-AUDUBON4 230 kV Line 1	254 / 280	OTP	409.2	161.1 / 146.1	432.2	170.1 / 154.4	5.75%	610 1

This document contains confidential and proprietary information of WAPA or TranServ International, Inc. Do not copy or distribute.

Limiting Element	Rating N/E	Owner	Pre Project		Post Project		DF	Contingency
			MVA	%	MVA	%		
WILLMAR4-GRANITF4 230 kV Line 1	240	GRE / WAPA	284.4	118.5	307.2	128	5.70%	MNVLTAP4-PANTHER4 230 kV Line 1
WAHPETN4-FERGSFL4 230 kV Line 1	320 / 352	OTP	356.3	111.3 / 101.2	378.8	118.4 / 107.6	5.63%	SHEYNNE4-AUDUBON4 230 kV Line 1
MCLEOD 4-PANTHER4 230 kV Line 1	319	XEL	279.2	87.5	301.5	94.5	5.58%	FTTHOMP3-GR ISLD3 345-345 kV Tx #13
SHEYNNE4-AUDUBON4 230 kV Line 1	254 / 280	OTP	365.9	144.1 / 130.7	388.1	152.8 / 138.6	5.55%	865
WILLMAR4-GRANITF4 230 kV Line 1	240	GRE / WAPA	270.1	112.5	292.3	121.8	5.55%	MCLEOD 4-PANTHER4 230 kV Line 1
HENNING4-FERGSFL4 230 kV Line 1	320 / 352	OTP	311.3	97.3 / 88.4	333.4	104.2 / 94.7	5.52%	SHEYNNE4-AUDUBON4 230 kV Line 1
HUBBARD4-AUDUBON4 230 kV Line 1	327 / 360	/ OTP	309.5	94.7 / 86	330.7	101.1 / 91.9	5.30%	WINGRIV4-INMAN 4 230 kV Line 1
HENNING4-FERGSFL4 230 kV Line 1	320 / 352	OTP	305.9	95.6 / 86.9	326.8	102.1 / 92.8	5.23%	HUBBARD4-AUDUBON4 230 kV Line 1
HENNING4-FERGSFL4 230 kV Line 1	320 / 352	OTP	305.8	95.5 / 86.9	326.6	102.1 / 92.8	5.20%	540
WAHPETN4-FERGSFL4 230 kV Line 1	320 / 352	OTP	300.1	93.8 / 85.3	320.9	100.3 / 91.2	5.20%	HUBBARD4-AUDUBON4 230 kV Line 1
WAHPETN4-FERGSFL4 230 kV Line 1	320 / 352	OTP	299.9	93.7 / 85.2	320.6	100.2 / 91.1	5.18%	540
STORLA 4-STORLA 7 230-115 kV Tx #1	100 / 125	WAPA	79.5	79.5 / 63.6	100.2	100.2 / 80.2	5.18%	140
WAHPETN4-FERGSFL4 230 kV Line 1	320 / 352	OTP	305	95.3 / 86.6	325.6	101.7 / 92.5	5.15%	110 2
SHEYNNE4-AUDUBON4 230 kV Line 1	254 / 280	OTP	388.4	152.9 / 138.7	409	161 / 146.1	5.15%	FRONTIER-MAPLE R4 230 kV Line 1
SHEYNNE4-AUDUBON4 230 kV Line 1	254 / 280	OTP	377.9	148.8 / 135	398.4	156.8 / 142.3	5.13%	WAHPETN4-FRONTIER 230 kV Line 1
HUBBARD4-AUDUBON4 230 kV Line 1	327 / 360	/ OTP	309.6	94.7 / 86	330.1	101 / 91.7	5.13%	866
LETCHER7-MITCHEL7 115 kV Line 1	145	WAPA	128.9	88.7	148.8	102.3	4.98%	SIOUXFL4-LETCHER4 230 kV Line 1
HANKSON4-FORMAN 4 230 kV Line 1	319 / 350	OTP	311.8	97.8 / 89.1	330.9	103.7 / 94.5	4.77%	110 1
HUBBARD4-AUDUBON4 230 kV Line 1	327 / 360	/ OTP	312.1	95.4 / 86.7	330.4	101 / 91.8	4.57%	NARY 7-CPROLLA7 115 kV Line 1
ROSEAUN2-ROSEAUS2 500 kV Line 1	1732 / 1905	XEL	1931.4	111.5 / 101.4	1949.4	112.5 / 102.3	4.50%	DRAYTON4-LETELER4 230 kV Line 1
ROSEAUN2-DORSEY 2 500 kV Line 1	1732 / 1905	XEL / MH	1998.4	115.4 / 104.9	2016.3	116.4 / 105.8	4.47%	DRAYTON4-LETELER4 230 kV Line 1
MTVERN 7-STORLA 7 115 kV Line 1	120 / 132	WAPA	108.7	90.6 / 82.3	126.3	105.2 / 95.7	4.40%	108 1
GAVINS 7-YKNTJCT7 115 kV Line 1	120 / 128	WAPA	124.1	103.4 / 97	141.5	117.9 / 110.5	4.35%	160 2
HANLON 4-SIOUXFL4 230 kV Line 1	320 / 352	WAPA	308.1	96.3 / 59.3 / 87.5	325.5	101.7 / 62.6 / 92.5	4.35%	FTTHOMP3-GR ISLD3 345-345 kV Tx #29
FTRANDL4-UTICAJC4 230 kV Line 1	318 / 350	WAPA	299.7	94.3 / 75.3 / 85.6	317	99.7 / 79.6 / 90.6	4.33%	FTTHOMP3-GR ISLD3 345-345 kV Tx #28
WILLMAR4-GRANITF4 230 kV Line 1	240	GRE / WAPA	220.8	92	238	99.2	4.30%	FTTHOMP3-GR ISLD3 345-345 kV Tx #14
LETCHER4-LETCHER7 230-115 kV Tx #1	100 / 125	WAPA	141	141 / 112.8	158	158 / 126.4	4.25%	SIOUXFL4-LETCHER4 230 kV Line 1
STORLA 4-STORLA 7 230-115 kV Tx #1	100 / 125	WAPA	136.1	136.1 / 108.9	153	153 / 122.4	4.23%	HANLON 4-STORLA 4 230 kV Line 1
SIDNEY 4-SIDXFMR4 230 kV Line 1	400 / 480	NPPD / WAPA	386.3	96.6 / 80.5	402.9	100.7 / 83.9	4.15%	KEYSTON3-SIDNEY 3 345 kV Line 1
STORLA 4-STORLA 7 230-115 kV Tx #1	100 / 125	WAPA	124.9	124.9 / 99.9	141.4	141.4 / 113.1	4.13%	HANLON 4-SIOUXFL4 230 kV Line 1
ARMOUR 7-MTVERN 7 115 kV Line 1	80 / 88	WAPA	86.9	108.6 / 98.8	103.4	129.3 / 117.5	4.13%	108 1
SHEYNNE4-MAPLE R4 230 kV Line 1	391 / 430	OTP	400.4	102.4 / 93.1	416.8	106.6 / 96.9	4.10%	SHEYNNE4-FARGO 4 230 kV Line 1
ARMOUR 7-FTRANDL7 115 kV Line 1	80 / 88	WAPA	70.7	88.4 / 80.3	87.1	108.9 / 99	4.10%	108 1

This document contains confidential and proprietary information of WAPA or TranServ International, Inc. Do not copy or distribute.

Limiting Element	Rating N/E	Owner	Pre Project		Post Project		DF	Contingency
			MVA	%	MVA	%		
ST JOE 3-COOPER 3 345 kV Line 1	956	MIPU / NPPD	654.8	68.5	671.1	70.2	4.08%	380
ST JOE 3-COOPER 3 345 kV Line 1	956	MIPU / NPPD	654.8	68.5	671.1	70.2	4.08%	380
MAPLE R4-MAPLE R3 230-345 kV Tx #2	336 / 420	OTP	443.2	131.9 / 105.5	459.2	136.7 / 109.3	4.00%	MAPLER1Y-MAPLE R4 345-230 kV Tx #1
MAPLE R4-MAPLE R3 230-345 kV Tx #1	336 / 420	OTP	443.2	131.9 / 105.5	459.2	136.7 / 109.3	4.00%	MAPLER2Y-MAPLE R4 345-230 kV Tx #1
MAPLE R4-MAPLE R3 230-345 kV Tx #2	336 / 420	OTP	443.3	131.9 / 105.5	459.2	136.7 / 109.3	3.97%	MAPLER1Y-MAPLE R3 345-345 kV Tx #1
MAPLE R4-MAPLE R3 230-345 kV Tx #1	336 / 420	OTP	443.3	131.9 / 105.5	459.2	136.7 / 109.3	3.97%	MAPLER2Y-MAPLE R3 345-345 kV Tx #1
WH SWAN7-FTRANDL7 115 kV Line 1	120 / 128	WAPA	133.6	111.3 / 104.4	149.4	124.5 / 116.7	3.95%	160 1
WH SWAN7-TYNDALL7 115 kV Line 1	120 / 128	WAPA	132.2	110.2 / 103.3	147.9	123.2 / 115.5	3.93%	160 1
BIGSTONY-BIGSTON4 230-230 kV Tx #1	233 / 291	OTP	245.8	105.5 / 84.5	261.3	112.1 / 89.8	3.88%	110 2
OGALALA4-SIDNEY 4 230 kV Line 1	320 / 352	NPPD	481	150.3 / 136.6	496.4	155.1 / 141	3.85%	KEYSTON3-SIDNEY 3 345 kV Line 1
MINVALY7-MINVALT4 115-230 kV Tx #6	187 / 215	XEL	216.2	115.6 / 100.6	231.4	123.7 / 107.6	3.80%	MNVLTAP4-GRANITF4 230 kV Line 1
BIGSTONY-BIGSTON7 230-115 kV Tx #1	233 / 291	OTP	245.7	105.5 / 84.4	260.6	111.9 / 89.6	3.73%	110 2
TYNDALL7-YKNTJCT7 115 kV Line 1	120 / 128	WAPA	115.6	96.3 / 90.3	130.4	108.6 / 101.9	3.70%	160 1
MINVALY7-GRANITF7 115 kV Line 1	209 / 229	XEL / WAPA	203.2	97.2 / 88.7	218	104.3 / 95.2	3.70%	MNVLTAP4-GRANITF4 230 kV Line 1
SQBUTTE4-CENTER 3 230-345 kV Tx #1	336 / 352	OTP	333.7	99.3 / 94.8	348.3	103.6 / 98.9	3.65%	CENTER 3-COYOTE 3 345 kV Line 1
GR ISLD4-GR ISL1T 230-345 kV Tx #1	250 / 313	NPPD	273.4	109.4 / 87.3	287.8	115.1 / 91.9	3.60%	MCCOOL 3-GR ISLD3 345 kV Line 1
LETCHER4-LETCHER7 230-115 kV Tx #1	100 / 125	WAPA	93	93 / 74.4	107.4	107.4 / 85.9	3.60%	140
SPLT RK5-SPLT RK7 161-115 kV Tx #6	186 / 242	XEL	197.8	106.3 / 81.7	212.2	114.1 / 87.7	3.60%	LAKEFLD3-NOBLES 3 345 kV Line 1
GR ISLD4-GR ISL2T 230-345 kV Tx #1	250 / 313	NPPD	272.3	108.9 / 87	286.7	114.7 / 91.6	3.60%	MCCOOL 3-GR ISLD3 345 kV Line 1
SPENCER7-FTRANDL7 115 kV Line 1	120 / 132	NPPD / WAPA	126.1	105.1 / 95.5	139.9	116.6 / 106	3.45%	160 1
ONEILL 7-SPENCER7 115 kV Line 1	120 / 132	NPPD	121.5	101.2 / 92	135	112.5 / 102.3	3.38%	160 1
GR ISL1T-GR ISLD3 345-345 kV Tx #1	250 / 313	NPPD	274.7	109.9 / 87.8	288.2	115.3 / 92.1	3.38%	MCCOOL 3-GR ISLD3 345 kV Line 1
GR ISL2T-GR ISLD3 345-345 kV Tx #1	250 / 313	NPPD	273.7	109.5 / 87.4	287.1	114.9 / 91.7	3.35%	MCCOOL 3-GR ISLD3 345 kV Line 1
WAHPETN4-FRONTIER 230 kV Line 1	265 / 292	OTP	291.9	110.1 / 100	305	115.1 / 104.5	3.28%	610 2
GRANITF4-MORRIS 4 230 kV Line 1	239 / 263	WAPA	258.9	108.3 / 98.4	272	113.8 / 103.4	3.28%	110 2
WAHPETN4-FRONTIER 230 kV Line 1	265 / 292	OTP	291.6	110 / 99.9	304.7	115 / 104.3	3.27%	HANKSON4-WAHPETN4 230 kV Line 1
TERMINL7-TERMID1Y 115-110 kV Tx #10	672 / 773	XEL	696.1	103.6 / 90.1	709	105.5 / 91.7	3.22%	NSP F
TERMINL3-TERMID1Y 345-110 kV Tx #10	672 / 874	XEL	696.1	103.6 / 79.6	709	105.5 / 81.1	3.22%	NSP F
FRONTIER-MAPLE R4 230 kV Line 1	265 / 292	OTP	331.9	125.3 / 113.7	344.7	130.1 / 118	3.20%	610 2
HARTGTN7-GAVINS 7 115 kV Line 1	120 / 132	NPPD / WAPA	115.4	96.2 / 87.4	128.2	106.9 / 97.1	3.20%	160 2
LKYNKTN7-BUFFRID7 115 kV Line 1	141 / 156	XEL	215.4	152.8 / 138.1	228.1	161.8 / 146.2	3.18%	110 1
FRONTIER-MAPLE R4 230 kV Line 1	265 / 292	OTP	331.6	125.1 / 113.6	344.3	129.9 / 117.9	3.18%	HANKSON4-WAHPETN4 230 kV Line 1
WAHPETN4-FRONTIER 230 kV Line 1	265 / 292	OTP	315.2	118.9 / 107.9	327.3	123.5 / 112.1	3.03%	SHEYNNE4-AUDUBON4 230 kV Line 1

This document contains confidential and proprietary information of WAPA or TranServ International, Inc. Do not copy or distribute.

Table C-6
2010 Summer Off Peak
South and East Dispatch
Voltage Significantly Affected Facilities – System Intact Results

BUS/NAME		KV	Owner	Pre Project	Post Project	Delta Volt %	Contingency
66509	FTRANDL4	230	WAPA	1.0065	0.9808	-2.570%	System Intact
66525	TYNDALL7	115	WAPA	1.0002	0.9767	-2.350%	System Intact
66286	TYNDALL8	69	WAPA	1.003	0.9797	-2.330%	System Intact
66463	WH SWAN7	115	WAPA	0.994	0.9714	-2.260%	System Intact
66510	FTRANDL7	115	WAPA	0.9941	0.9715	-2.260%	System Intact
66526	UTICAJC4	230	WAPA	0.9962	0.9737	-2.250%	System Intact
67406	TRIPP 7	115	WAPA	1.0117	0.9893	-2.240%	System Intact
66833	KYPMPS23	115	WAPA	1.0004	0.9781	-2.230%	System Intact
66902	UTICAJC7	115	WAPA	1.0083	0.9862	-2.210%	System Intact
67409	MENNOJT7	115	WAPA	1.0101	0.9882	-2.190%	System Intact
66900	LETCHER4	230	WAPA	0.99	0.9682	-2.180%	System Intact
66832	KYPMP 22	115	WAPA	0.9977	0.977	-2.070%	System Intact
66901	LETCHER7	115	WAPA	1.0042	0.9836	-2.060%	System Intact
66278	HANLON18	69	WAPA	0.9592	0.9389	-2.030%	System Intact
66249	ARMOUR 8	69	WAPA	0.9858	0.9655	-2.030%	System Intact
66501	ARMOUR 7	115	WAPA	0.9943	0.974	-2.030%	System Intact
66279	HANLON28	69	WAPA	0.967	0.9469	-2.010%	System Intact
66513	HANLON 4	230	WAPA	0.9825	0.9624	-2.010%	System Intact
67407	YKNTJCT7	115	WAPA	1.02	0.9999	-2.010%	System Intact
67405	MITCHEL7	115	WAPA	1.0116	0.9918	-1.980%	System Intact
67410	MITCLNW7	115	WAPA	1.0114	0.9918	-1.960%	System Intact
67121	SPIRITM7	115	WAPA	1.0131	0.9943	-1.880%	System Intact
66517	MANNING7	115	WAPA	1.0104	0.9917	-1.870%	System Intact
66516	LAKE PLATTE4	230	WAPA	1.0079	0.9897	-1.820%	System Intact
66277	LAKE PLATTE8	69	WAPA	0.9993	0.9812	-1.810%	System Intact
66253	BERSFRDT	115	WAPA	0.9757	0.9577	-1.800%	System Intact
66254	BERSFRD8	69	WAPA	0.9757	0.9577	-1.800%	System Intact

This document contains confidential and proprietary information of WAPA or TranServ International, Inc. Do not copy or distribute.

BUS/NAME		KV	Owner	Pre Project	Post Project	Delta Volt %	Contingency
66399	VFODNES8	69	WAPA	0.9874	0.9694	-1.800%	System Intact
66000	VFODNES7	115	WAPA	0.995	0.9772	-1.780%	System Intact
66502	BERSFRD7	115	WAPA	0.9929	0.9751	-1.780%	System Intact
67985	SHINDLR7	115	WAPA	0.996	0.9782	-1.780%	System Intact
67986	HARSBRG7	115	WAPA	0.996	0.9782	-1.780%	System Intact
66001	VFODNS1T	230	WAPA	0.9952	0.9774	-1.780%	System Intact
66398	VFODNES4	230	WAPA	0.9973	0.9795	-1.780%	System Intact
66287	RASMUSN8	69	WAPA	1.01	0.9938	-1.620%	System Intact
66536	RASMUSN4	230	WAPA	0.9971	0.9813	-1.580%	System Intact
66251	MTVERNS8	69	WAPA	0.9802	0.9644	-1.580%	System Intact
66252	MTVERNN8	69	WAPA	0.9831	0.9673	-1.580%	System Intact
66518	MTVERN 7	115	WAPA	0.9873	0.9715	-1.580%	System Intact
66523	SIOUXFL4	230	WAPA	0.9969	0.9815	-1.540%	System Intact
66235	SIOUXFL8	69	WAPA	0.9869	0.9718	-1.510%	System Intact
66524	SIOUXFL7	115	WAPA	0.9946	0.9795	-1.510%	System Intact
67980	WBRANDN7	115	WAPA	0.9947	0.9796	-1.510%	System Intact
67981	CORSON 7	115	WAPA	0.9948	0.9797	-1.510%	System Intact
67982	BRANDON7	115	WAPA	0.9948	0.9797	-1.510%	System Intact
67983	ROWENA 7	115	WAPA	0.995	0.9799	-1.510%	System Intact
67984	SPLROCK7	115	WAPA	0.995	0.9799	-1.510%	System Intact
66231	SIOUXF1T	230	WAPA	0.9953	0.9803	-1.500%	System Intact
66234	SIOUXF2T	230	WAPA	0.9952	0.9802	-1.500%	System Intact
66245	CLEVELD8	69	WAPA	0.9801	0.9652	-1.490%	System Intact
66475	BONESTL7	115	WAPA	1.0015	0.9867	-1.480%	System Intact
66571	GR ISLD3	345	NPPD	0.9473	0.9325	-1.480%	System Intact
66588	CLEVELD4	230	WAPA	0.9904	0.9756	-1.480%	System Intact
64806	E.COL. 4	230	NPPD	0.962	0.9473	-1.470%	System Intact
66578	PAHOJA 4	230	WAPA	0.992	0.9774	-1.460%	System Intact
63054	PANTHER4	230	XEL	0.9595	0.9453	-1.420%	System Intact
67122	STORLA 4	230	WAPA	1.0082	0.9944	-1.380%	System Intact
67123	STORLA 7	115	WAPA	0.9938	0.9807	-1.310%	System Intact
64896	MCCOOL 3	345	NPPD	0.9578	0.9451	-1.270%	System Intact
62425	WILLMAR7	115	GRE	0.9617	0.9491	-1.260%	System Intact
66562	EAGLE 4	230	WAPA	0.9932	0.9807	-1.250%	System Intact
65025	E.COL. Y	230	NPPD	0.934	0.9217	-1.230%	System Intact

This document contains confidential and proprietary information of WAPA or TranServ International, Inc. Do not copy or distribute.

BUS/NAME		KV	Owner	Pre Project	Post Project	Delta Volt %	Contingency
60162	WAKEFLD7	115	XEL	0.9592	0.9471	-1.210%	System Intact
64839	GR ISLD4	230	NPPD	0.9416	0.9298	-1.180%	System Intact
66550	GRANITF4	230	WAPA	0.9944	0.9826	-1.180%	System Intact
66528	WOONSKT7	115	WAPA	0.9989	0.9872	-1.170%	System Intact
66226	FLANDRUT	115	WAPA	1.0023	0.9907	-1.160%	System Intact
66229	FLANDRU8	69	WAPA	1.0021	0.9905	-1.160%	System Intact
66505	FLANDRU7	115	WAPA	1.0104	0.9988	-1.160%	System Intact
62006	KERKHO 7	115	OTP	0.9686	0.9571	-1.150%	System Intact
62980	MCLEOD 4	230	XEL	0.9612	0.9497	-1.150%	System Intact
66298	GRANITF8	69	WAPA	0.9855	0.9742	-1.130%	System Intact
66313	GR ISL1T	345	NPPD	0.9416	0.9303	-1.130%	System Intact
66315	GR ISL2T	345	NPPD	0.9416	0.9303	-1.130%	System Intact
66579	EAGLE 8	69	WAPA	0.9938	0.9826	-1.120%	System Intact
66296	GRANITFT	230	WAPA	1.0061	0.995	-1.110%	System Intact
66466	GRANTF2T	230	WAPA	1.0061	0.995	-1.110%	System Intact
66551	GRANITF7	115	WAPA	1.0045	0.9934	-1.110%	System Intact
66498	J1CENTR8	69	WAPA	0.9886	0.9779	-1.070%	System Intact
67124	J1ROCKV8	69	WAPA	0.9877	0.9771	-1.060%	System Intact
67129	L3EAGLE8	69	WAPA	0.9863	0.9761	-1.020%	System Intact
66303	SIOUXC1T	345	WAPA	1.0028	0.9928	-1.000%	System Intact

This document contains confidential and proprietary information of WAPA or TranServ International, Inc. Do not copy or distribute.

Table C-7
2010 Summer Off Peak
South and East Dispatch
Voltage Significantly Affected Facilities – N-1 Contingency Results

BUS/NAME		KV	Owner	Pre Project	Post Project	Delta Volt %	Contingency
66278	HANLON18	69	WAPA	0.9253	0.8327	-9.260%	66506 FTTHOMP3 345 66571 GR ISLD3 345 1
66279	HANLON28	69	WAPA	0.9335	0.842	-9.150%	66506 FTTHOMP3 345 66571 GR ISLD3 345 1
66513	HANLON 4	230	WAPA	0.9491	0.8582	-9.090%	66506 FTTHOMP3 345 66571 GR ISLD3 345 1
66832	KYPMP 22	115	WAPA	0.964	0.8752	-8.880%	66506 FTTHOMP3 345 66571 GR ISLD3 345 1
66900	LETCHER4	230	WAPA	0.9553	0.8669	-8.840%	66506 FTTHOMP3 345 66571 GR ISLD3 345 1
66901	LETCHER7	115	WAPA	0.9708	0.8831	-8.770%	66506 FTTHOMP3 345 66571 GR ISLD3 345 1
67405	MITCHEL7	115	WAPA	0.9791	0.8926	-8.650%	66506 FTTHOMP3 345 66571 GR ISLD3 345 1
66509	FTRANDL4	230	WAPA	0.964	0.8777	-8.630%	66506 FTTHOMP3 345 66571 GR ISLD3 345 1
67410	MITCLNW7	115	WAPA	0.979	0.8929	-8.610%	66506 FTTHOMP3 345 66571 GR ISLD3 345 1
67406	TRIPP 7	115	WAPA	0.9769	0.8929	-8.400%	66506 FTTHOMP3 345 66571 GR ISLD3 345 1
66249	ARMOUR 8	69	WAPA	0.9512	0.8711	-8.010%	66506 FTTHOMP3 345 66571 GR ISLD3 345 1
66501	ARMOUR 7	115	WAPA	0.9596	0.8796	-8.000%	66506 FTTHOMP3 345 66571 GR ISLD3 345 1
64965	SPENCER7	115	NPPD	0.9462	0.8664	-7.980%	66506 FTTHOMP3 345 66571 GR ISLD3 345 1
66526	UTICAJC4	230	WAPA	0.9612	0.8814	-7.980%	66506 FTTHOMP3 345 66571 GR ISLD3 345 1
66833	KYPMPS23	115	WAPA	0.9671	0.8873	-7.980%	66506 FTTHOMP3 345 66571 GR ISLD3 345 1
66399	VFODNES8	69	WAPA	0.9579	0.8787	-7.920%	66506 FTTHOMP3 345 66571 GR ISLD3 345 1
66525	TYNDALL7	115	WAPA	0.9658	0.8866	-7.920%	66506 FTTHOMP3 345 66571 GR ISLD3 345 1
66902	UTICAJC7	115	WAPA	0.9754	0.8968	-7.860%	66506 FTTHOMP3 345 66571 GR ISLD3 345 1
66286	TYNDALL8	69	WAPA	0.969	0.8906	-7.840%	66506 FTTHOMP3 345 66571 GR ISLD3 345 1
67409	MENNOJT7	115	WAPA	0.9776	0.8993	-7.830%	66506 FTTHOMP3 345 66571 GR ISLD3 345 1
66463	WH SWAN7	115	WAPA	0.957	0.8788	-7.820%	66506 FTTHOMP3 345 66571 GR ISLD3 345 1
66510	FTRANDL7	115	WAPA	0.9571	0.8789	-7.820%	66506 FTTHOMP3 345 66571 GR ISLD3 345 1
66398	VFODNES4	230	WAPA	0.9681	0.8901	-7.800%	66506 FTTHOMP3 345 66571 GR ISLD3 345 1
66251	MTVERNS8	69	WAPA	0.9516	0.8737	-7.790%	66506 FTTHOMP3 345 66571 GR ISLD3 345 1
66518	MTVERN 7	115	WAPA	0.9587	0.8808	-7.790%	66506 FTTHOMP3 345 66571 GR ISLD3 345 1
66001	VFODNS1T	230	WAPA	0.9661	0.8882	-7.790%	66506 FTTHOMP3 345 66571 GR ISLD3 345 1
67986	HARSBRG7	115	WAPA	0.9668	0.8889	-7.790%	66506 FTTHOMP3 345 66571 GR ISLD3 345 1
67985	SHINDLR7	115	WAPA	0.9669	0.889	-7.790%	66506 FTTHOMP3 345 66571 GR ISLD3 345 1
66000	VFODNES7	115	WAPA	0.9659	0.8881	-7.780%	66506 FTTHOMP3 345 66571 GR ISLD3 345 1
66252	MTVERNN8	69	WAPA	0.9546	0.877	-7.760%	66506 FTTHOMP3 345 66571 GR ISLD3 345 1

This document contains confidential and proprietary information of WAPA or TranServ International, Inc. Do not copy or distribute.

BUS/NAME		KV	Owner	Pre Project	Post Project	Delta Volt %	Contingency
66523	SIOUXFL4	230	WAPA	0.9707	0.8943	-7.640%	66506 FTTHOMP3 345 66571 GR ISLD3 345 1
66253	BERSFRDT	115	WAPA	0.9476	0.8715	-7.610%	66506 FTTHOMP3 345 66571 GR ISLD3 345 1
66254	BERSFRD8	69	WAPA	0.9476	0.8715	-7.610%	66506 FTTHOMP3 345 66571 GR ISLD3 345 1
60127	SPLT RK4	230	XEL	0.9724	0.8967	-7.570%	66506 FTTHOMP3 345 66571 GR ISLD3 345 1
66235	SIOUXFL8	69	WAPA	0.9612	0.886	-7.520%	66506 FTTHOMP3 345 66571 GR ISLD3 345 1
67983	ROWENA 7	115	WAPA	0.9693	0.8941	-7.520%	66506 FTTHOMP3 345 66571 GR ISLD3 345 1
67984	SPLROCK7	115	WAPA	0.9693	0.8941	-7.520%	66506 FTTHOMP3 345 66571 GR ISLD3 345 1
66524	SIOUXFL7	115	WAPA	0.9689	0.8937	-7.520%	66506 FTTHOMP3 345 66571 GR ISLD3 345 1
67980	WBRANDN7	115	WAPA	0.969	0.8938	-7.520%	66506 FTTHOMP3 345 66571 GR ISLD3 345 1
67981	CORSON 7	115	WAPA	0.9691	0.8939	-7.520%	66506 FTTHOMP3 345 66571 GR ISLD3 345 1
67982	BRANDON7	115	WAPA	0.9691	0.8939	-7.520%	66506 FTTHOMP3 345 66571 GR ISLD3 345 1
66231	SIOUXF1T	230	WAPA	0.9697	0.8946	-7.510%	66506 FTTHOMP3 345 66571 GR ISLD3 345 1
66234	SIOUXF2T	230	WAPA	0.9696	0.8946	-7.500%	66506 FTTHOMP3 345 66571 GR ISLD3 345 1
66502	BERSFRD7	115	WAPA	0.9651	0.8902	-7.490%	66506 FTTHOMP3 345 66571 GR ISLD3 345 1
67123	STORLA 7	115	WAPA	0.9695	0.8949	-7.460%	66506 FTTHOMP3 345 66571 GR ISLD3 345 1
64926	ONEILL 7	115	NPPD	0.9571	0.8847	-7.240%	66506 FTTHOMP3 345 66571 GR ISLD3 345 1
66277	LAKE PLATTE8	69	WAPA	0.9677	0.8956	-7.210%	66506 FTTHOMP3 345 66571 GR ISLD3 345 1
66245	CLEVELD8	69	WAPA	0.955	0.8863	-6.870%	66506 FTTHOMP3 345 66571 GR ISLD3 345 1
64812	EMMET 7	115	NPPD	0.9609	0.8926	-6.830%	66506 FTTHOMP3 345 66571 GR ISLD3 345 1
66588	CLEVELD4	230	WAPA	0.9656	0.8977	-6.790%	66506 FTTHOMP3 345 66571 GR ISLD3 345 1
66578	PAHOJA 4	230	WAPA	0.9673	0.8997	-6.760%	66506 FTTHOMP3 345 66571 GR ISLD3 345 1
64730	ATKINSN7	115	NPPD	0.9646	0.899	-6.560%	66506 FTTHOMP3 345 66571 GR ISLD3 345 1
66900	LETCHER4	230	WAPA	0.9541	0.896	-5.810%	108 1
66278	HANLON18	69	WAPA	0.9337	0.877	-5.670%	108 1
66279	HANLON28	69	WAPA	0.9418	0.8857	-5.610%	108 1
66278	HANLON18	69	WAPA	0.9188	0.8629	-5.590%	NSP - 1
66278	HANLON18	69	WAPA	0.9347	0.879	-5.570%	160 1
66279	HANLON28	69	WAPA	0.927	0.8717	-5.530%	NSP - 1
66279	HANLON28	69	WAPA	0.9428	0.8877	-5.510%	160 1
66513	HANLON 4	230	WAPA	0.9426	0.8878	-5.480%	NSP - 1
66900	LETCHER4	230	WAPA	0.9505	0.8987	-5.180%	NSP - 1
66278	HANLON18	69	WAPA	0.9222	0.871	-5.120%	60130 SPLTRTA3 345 66537 WHITE 3 345 1

This document contains confidential and proprietary information of WAPA or TranServ International, Inc. Do not copy or distribute.

BUS/NAME		KV	Owner	Pre Project	Post Project	Delta Volt %	Contingency
66279	HANLON28	69	WAPA	0.9304	0.8798	-5.060%	60130 SPLTRTA3 345 66537 WHITE 3 345 1
66278	HANLON18	69	WAPA	0.9224	0.872	-5.040%	60126 SPLT RK3 345 60130 SPLTRTA3 345 1
66513	HANLON 4	230	WAPA	0.946	0.8957	-5.030%	60130 SPLTRTA3 345 66537 WHITE 3 345 1
66279	HANLON28	69	WAPA	0.9305	0.8807	-4.980%	60126 SPLT RK3 345 60130 SPLTRTA3 345 1
66513	HANLON 4	230	WAPA	0.9461	0.8967	-4.940%	60126 SPLT RK3 345 60130 SPLTRTA3 345 1
64965	SPENCER7	115	NPPD	0.9541	0.908	-4.610%	NSP - 1
66253	BERSFRDT	115	WAPA	0.9408	0.8949	-4.590%	NSP - 1
66254	BERSFRD8	69	WAPA	0.9408	0.8949	-4.590%	NSP - 1
66278	HANLON18	69	WAPA	0.9346	0.8945	-4.010%	121
62006	KERKHO 7	115	OTP	0.9577	0.9189	-3.880%	66506 FTTHOMP3 345 66571 GR ISLD3 345 1
66251	MTVERNS8	69	WAPA	0.9332	0.8971	-3.610%	67122 STORLA 4 230 99617 WESNGTN4 230 1
62001	BENSON 7	115	OTP	0.9545	0.9186	-3.590%	66506 FTTHOMP3 345 66571 GR ISLD3 345 1
64806	E.COL. 4	230	NPPD	0.9316	0.8998	-3.180%	160 1
64749	BEVERLY7	115	NPPD	0.8501	0.8203	-2.980%	64831 GENTLMN3 345 64943 REDWILO3 345 1
64975	STOCKVL7	115	NPPD	0.8742	0.8445	-2.970%	64831 GENTLMN3 345 64943 REDWILO3 345 1
66571	GR ISLD3	345	NPPD	0.8972	0.8687	-2.850%	56451 MINGO 7 345 64943 REDWILO3 345 1
65025	E.COL. Y	230	NPPD	0.9223	0.894	-2.830%	66506 FTTHOMP3 345 66571 GR ISLD3 345 1
64894	MCCOOK 7	115	NPPD	0.8953	0.8679	-2.740%	64831 GENTLMN3 345 64943 REDWILO3 345 1
64944	REDWILO7	115	NPPD	0.8922	0.865	-2.720%	64831 GENTLMN3 345 64943 REDWILO3 345 1
64839	GR ISLD4	230	NPPD	0.8961	0.8703	-2.580%	56451 MINGO 7 345 64943 REDWILO3 345 1
65025	E.COL. Y	230	NPPD	0.9101	0.8846	-2.550%	160 1
66313	GR ISL1T	345	NPPD	0.8967	0.8714	-2.530%	56451 MINGO 7 345 64943 REDWILO3 345 1
66315	GR ISL2T	345	NPPD	0.8967	0.8714	-2.530%	56451 MINGO 7 345 64943 REDWILO3 345 1
64813	ENDERS 7	115	NPPD	0.8848	0.86	-2.480%	64831 GENTLMN3 345 64943 REDWILO3 345 1
66571	GR ISLD3	345	NPPD	0.9208	0.8961	-2.470%	64831 GENTLMN3 345 64943 REDWILO3 345 1
65028	GR.IST2Y	230	NPPD	0.8945	0.8703	-2.420%	56451 MINGO 7 345 64943 REDWILO3 345 1
65029	GR.IST5Y	230	NPPD	0.8951	0.8709	-2.420%	56451 MINGO 7 345 64943 REDWILO3 345 1
65035	MCCOOL Y	345	NPPD	0.9256	0.9014	-2.420%	56451 MINGO 7 345 64943 REDWILO3 345 1

This document contains confidential and proprietary information of WAPA or TranServ International, Inc. Do not copy or distribute.

BUS/NAME		KV	Owner	Pre Project	Post Project	Delta Volt %	Contingency
64896	MCCOOL 3	345	NPPD	0.9089	0.8848	-2.410%	56451 MINGO 7 345 64943 REDWILO3 345 1
65041	REDWLO Y	345	NPPD	0.8198	0.7959	-2.390%	64831 GENTLMN3 345 64943 REDWILO3 345 1
64733	AXTELL 3	345	NPPD	0.8829	0.8593	-2.360%	56451 MINGO 7 345 64943 REDWILO3 345 1
64847	HASTING4	230	NPPD	0.8918	0.8682	-2.360%	56451 MINGO 7 345 64943 REDWILO3 345 1
64984	SWEET W3	345	NPPD	0.8975	0.8743	-2.320%	56451 MINGO 7 345 64943 REDWILO3 345 1
67244	ATHEY 7	115	NPPD	0.9007	0.8776	-2.310%	64831 GENTLMN3 345 64943 REDWILO3 345 1
63202	AUDUBONY	230	OTP	0.9306	0.9076	-2.300%	60133 SHEYNNE4 230 63336 AUDUBON4 230 1
62001	BENSON 7	115	OTP	0.9119	0.8892	-2.270%	110 2
60374	FIBROMN7	115	XEL	0.9119	0.8892	-2.270%	110 2
65021	AXTELL Y	345	NPPD	0.8918	0.8691	-2.270%	56451 MINGO 7 345 64943 REDWILO3 345 1
64933	PAULINE3	345	NPPD	0.893	0.8706	-2.240%	56451 MINGO 7 345 64943 REDWILO3 345 1
64984	SWEET W3	345	NPPD	0.9205	0.8981	-2.240%	64831 GENTLMN3 345 64943 REDWILO3 345 1
65040	PAULIN Y	345	NPPD	0.9118	0.8895	-2.230%	56451 MINGO 7 345 64943 REDWILO3 345 1
62006	KERKHO 7	115	OTP	0.9248	0.9025	-2.230%	110 2
62027	HANCOCK7	115	OTP	0.9171	0.8949	-2.220%	110 2
63248	CASS N 7	115	OTP	0.9381	0.916	-2.210%	60133 SHEYNNE4 230 63336 AUDUBON4 230 1
63247	CASS LK7	115	OTP	0.9384	0.9163	-2.210%	60133 SHEYNNE4 230 63336 AUDUBON4 230 1
62002	WALDEN 7	115	OTP	0.9202	0.8984	-2.180%	110 2
65025	E.COL. Y	230	NPPD	0.9051	0.8833	-2.180%	56451 MINGO 7 345 64943 REDWILO3 345 1
64839	GR ISLD4	230	NPPD	0.9189	0.8971	-2.180%	64831 GENTLMN3 345 64943 REDWILO3 345 1
64733	AXTELL 3	345	NPPD	0.9093	0.888	-2.130%	64831 GENTLMN3 345 64943 REDWILO3 345 1
67245	CRETEHE7	115	NPPD	0.9182	0.8969	-2.130%	64831 GENTLMN3 345 64943 REDWILO3 345 1
66313	GR ISL1T	345	NPPD	0.9196	0.8983	-2.130%	64831 GENTLMN3 345 64943 REDWILO3 345 1
66315	GR ISL2T	345	NPPD	0.9196	0.8984	-2.120%	64831 GENTLMN3 345 64943 REDWILO3 345 1
62420	RDO TAP7	115	MP	0.9579	0.9367	-2.120%	66529 WATERTN3 345 67160 GROTON 3 345 1
62415	RDO 7	115	MP	0.9578	0.9367	-2.114%	66529 WATERTN3 345 67160 GROTON 3 345 1
63218	MOROTP 7	115	OTP	0.9272	0.9061	-2.110%	110 2
64948	RIVERDL4	230	NPPD	0.8812	0.8601	-2.110%	56451 MINGO 7 345 64943 REDWILO3 345 1
65021	AXTELL Y	345	NPPD	0.9179	0.8969	-2.100%	64831 GENTLMN3 345 64943 REDWILO3 345 1
65042	RIVRDL Y	230	NPPD	0.8906	0.87	-2.060%	56451 MINGO 7 345 64943 REDWILO3 345 1

This document contains confidential and proprietary information of WAPA or TranServ International, Inc. Do not copy or distribute.

BUS/NAME		KV	Owner	Pre Project	Post Project	Delta Volt %	Contingency
65030	HASTNG Y	230	NPPD	0.911	0.8905	-2.050%	56451 MINGO 7 345 64943 REDWILO3 345 1
64948	RIVERDL4	230	NPPD	0.9004	0.8802	-2.020%	64831 GENTLMN3 345 64943 REDWILO3 345 1
65025	E.COL. Y	230	NPPD	0.9199	0.8999	-2.000%	NSP - 1
62415	RDO 7	115	MP	0.9589	0.939	-1.990%	60133 SHEYNNE4 230 63336 AUDUBON4 230 1
62006	KERKHO 7	115	OTP	0.9392	0.9194	-1.980%	60364 FIELD_N3 345 60365 FIELD_S3 345 1
62420	RDO TAP7	115	MP	0.959	0.9392	-1.980%	60133 SHEYNNE4 230 63336 AUDUBON4 230 1
65042	RIVRDL Y	230	NPPD	0.9127	0.8929	-1.980%	64831 GENTLMN3 345 64943 REDWILO3 345 1
61641	HUBBARD7	115	MP	0.9613	0.9416	-1.970%	60133 SHEYNNE4 230 63336 AUDUBON4 230 1
64847	HASTING4	230	NPPD	0.9142	0.8946	-1.960%	64831 GENTLMN3 345 64943 REDWILO3 345 1
65029	GR.IST5Y	230	NPPD	0.917	0.8975	-1.950%	64831 GENTLMN3 345 64943 REDWILO3 345 1
65025	E.COL. Y	230	NPPD	0.918	0.8986	-1.940%	160 2
65028	GR.IST2Y	230	NPPD	0.9163	0.8969	-1.940%	64831 GENTLMN3 345 64943 REDWILO3 345 1
64759	C.CREEK4	230	NPPD	0.9058	0.8865	-1.930%	64831 GENTLMN3 345 64943 REDWILO3 345 1
64943	REDWILO3	345	NPPD	0.8517	0.8326	-1.910%	64831 GENTLMN3 345 64943 REDWILO3 345 1
64765	CANADAY4	230	NPPD	0.9063	0.8873	-1.900%	64831 GENTLMN3 345 64943 REDWILO3 345 1
62006	KERKHO 7	115	OTP	0.9385	0.9196	-1.890%	ALTW-26
62415	RDO 7	115	MP	0.9543	0.9355	-1.880%	60331 LKFLDXL3 345 60364 FIELD_N3 345 1
62415	RDO 7	115	MP	0.9543	0.9356	-1.870%	60108 WILMART3 345 60365 FIELD_S3 345 1
62420	RDO TAP7	115	MP	0.9545	0.9358	-1.870%	60108 WILMART3 345 60365 FIELD_S3 345 1
62420	RDO TAP7	115	MP	0.9544	0.9357	-1.870%	60331 LKFLDXL3 345 60364 FIELD_N3 345 1
62415	RDO 7	115	MP	0.9542	0.9355	-1.870%	ALTW-26
62420	RDO TAP7	115	MP	0.9543	0.9356	-1.870%	ALTW-26
61641	HUBBARD7	115	MP	0.9565	0.9379	-1.860%	60331 LKFLDXL3 345 60364 FIELD_N3 345 1
61641	HUBBARD7	115	MP	0.9564	0.9378	-1.860%	ALTW-26
61641	HUBBARD7	115	MP	0.9565	0.938	-1.850%	60108 WILMART3 345 60365 FIELD_S3 345 1
62415	RDO 7	115	MP	0.9525	0.9341	-1.840%	66506 FTTHOMP3 345 66571 GR ISLD3 345 1
62420	RDO TAP7	115	MP	0.9526	0.9342	-1.840%	66506 FTTHOMP3 345 66571 GR ISLD3 345 1
61641	HUBBARD7	115	MP	0.9548	0.9364	-1.840%	66506 FTTHOMP3 345 66571 GR ISLD3 345 1
62415	RDO 7	115	MP	0.9544	0.9363	-1.810%	60364 FIELD_N3 345 60365 FIELD_S3 345 1

This document contains confidential and proprietary information of WAPA or TranServ International, Inc. Do not copy or distribute.

BUS/NAME		KV	Owner	Pre Project	Post Project	Delta Volt %	Contingency
62420	RDO TAP7	115	MP	0.9546	0.9365	-1.810%	60364 FIELD_N3 345 60365 FIELD_S3 345 1
61641	HUBBARD7	115	MP	0.9566	0.9386	-1.800%	60364 FIELD_N3 345 60365 FIELD_S3 345 1
62005	KERKHOT7	115	XEL	0.9028	0.8848	-1.800%	63050 WILLMAR4 230 66550 GRANITF4 230 1
62415	RDO 7	115	MP	0.9552	0.9379	-1.730%	34006 LAKEFLD3 345 60331 LKFLDXL3 345 1
62420	RDO TAP7	115	MP	0.9553	0.938	-1.730%	34006 LAKEFLD3 345 60331 LKFLDXL3 345 1
62425	WILLMAR7	115	GRE	0.8882	0.8709	-1.730%	63050 WILLMAR4 230 66550 GRANITF4 230 1
61641	HUBBARD7	115	MP	0.9574	0.9402	-1.720%	34006 LAKEFLD3 345 60331 LKFLDXL3 345 1
64759	C.CREEK4	230	NPPD	0.8984	0.8812	-1.720%	56451 MINGO 7 345 64943 REDWILO3 345 1
62006	KERKHO 7	115	OTP	0.912	0.8955	-1.650%	63050 WILLMAR4 230 66550 GRANITF4 230 1
64765	CANADAY4	230	NPPD	0.9019	0.886	-1.590%	56451 MINGO 7 345 64943 REDWILO3 345 1
60385	W NEWU 7	115	XEL	0.9135	0.8976	-1.590%	60364 FIELD_N3 345 60365 FIELD_S3 345 1
60385	W NEWU 7	115	XEL	0.9103	0.8947	-1.560%	ALTW-26
60385	W NEWU 7	115	XEL	0.913	0.8975	-1.550%	60331 LKFLDXL3 345 60364 FIELD_N3 345 1
60385	W NEWU 7	115	XEL	0.9107	0.8952	-1.550%	60108 WILMART3 345 60365 FIELD_S3 345 1
62420	RDO TAP7	115	MP	0.9634	0.9486	-1.480%	130 1
62415	RDO 7	115	MP	0.9632	0.9484	-1.480%	130 1
62425	WILLMAR7	115	GRE	0.8929	0.8786	-1.430%	500
62415	RDO 7	115	MP	0.9583	0.9441	-1.420%	56451 MINGO 7 345 64943 REDWILO3 345 1
62420	RDO TAP7	115	MP	0.9584	0.9442	-1.420%	56451 MINGO 7 345 64943 REDWILO3 345 1
61641	HUBBARD7	115	MP	0.9605	0.9465	-1.400%	56451 MINGO 7 345 64943 REDWILO3 345 1
62415	RDO 7	115	MP	0.9567	0.9429	-1.380%	66529 WATERTN3 345 66537 WHITE 3 345 1
62420	RDO TAP7	115	MP	0.9568	0.943	-1.380%	66529 WATERTN3 345 66537 WHITE 3 345 1
62415	RDO 7	115	MP	0.9616	0.948	-1.360%	160 2
62415	RDO 7	115	MP	0.9476	0.934	-1.360%	110 2
61641	HUBBARD7	115	MP	0.9499	0.9363	-1.360%	110 2
61641	HUBBARD7	115	MP	0.9589	0.9453	-1.360%	66529 WATERTN3 345 66537 WHITE 3 345 1
62420	RDO TAP7	115	MP	0.9477	0.9342	-1.350%	110 2

This document contains confidential and proprietary information of WAPA or TranServ International, Inc. Do not copy or distribute.

BUS/NAME		KV	Owner	Pre Project	Post Project	Delta Volt %	Contingency
62420	RDO TAP7	115	MP	0.9617	0.9482	-1.350%	160 2
62415	RDO 7	115	MP	0.9603	0.947	-1.330%	67105 LELANDO3 345 67160 GROTON 3 345 1
62001	BENSON 7	115	OTP	0.9243	0.911	-1.330%	63050 WILLMAR4 230 66550 GRANITF4 230 1
62006	KERKHO 7	115	OTP	0.9221	0.9089	-1.320%	500
62420	RDO TAP7	115	MP	0.9604	0.9472	-1.320%	67105 LELANDO3 345 67160 GROTON 3 345 1
61641	HUBBARD7	115	MP	0.9625	0.9493	-1.320%	67105 LELANDO3 345 67160 GROTON 3 345 1
62415	RDO 7	115	MP	0.9533	0.9406	-1.270%	61611 WINGRIV4 230 63052 INMAN 4 230 1
62420	RDO TAP7	115	MP	0.9534	0.9408	-1.260%	61611 WINGRIV4 230 63052 INMAN 4 230 1
61641	HUBBARD7	115	MP	0.9556	0.9431	-1.250%	61611 WINGRIV4 230 63052 INMAN 4 230 1
62415	RDO 7	115	MP	0.9576	0.9452	-1.240%	795
62420	RDO TAP7	115	MP	0.9577	0.9453	-1.240%	795
61616	HILLTOP4	230	MP	0.9462	0.9339	-1.230%	015 2
61614	90L TAP4	230	MP	0.9461	0.9339	-1.220%	015 2
61615	ARROWHD4	230	MP	0.9456	0.9334	-1.220%	015 2
61641	HUBBARD7	115	MP	0.9599	0.9477	-1.220%	795
61681	LSPI 7	115	MP	0.953	0.9409	-1.210%	015 2
62415	RDO 7	115	MP	0.9538	0.9417	-1.210%	NSP
61686	15TH AV7	115	MP	0.9481	0.9361	-1.200%	015 2
61672	HILLTOP7	115	MP	0.9518	0.9398	-1.200%	015 2
61676	HIBBARD7	115	MP	0.9532	0.9412	-1.200%	015 2
61576	HILTPJCT	115	MP	0.9535	0.9415	-1.200%	015 2
62415	RDO 7	115	MP	0.9539	0.9419	-1.200%	60108 WILMART3 345 60192 BLUE LK3 345 1
62420	RDO TAP7	115	MP	0.954	0.942	-1.200%	60108 WILMART3 345 60192 BLUE LK3 345 1
62420	RDO TAP7	115	MP	0.9539	0.9419	-1.200%	NSP
62415	RDO 7	115	MP	0.9538	0.9418	-1.200%	NSP 1A
62420	RDO TAP7	115	MP	0.954	0.942	-1.200%	NSP 1A
61680	WNTR ST7	115	MP	0.9552	0.9433	-1.190%	015 2
61641	HUBBARD7	115	MP	0.9562	0.9443	-1.190%	60108 WILMART3 345 60192 BLUE LK3 345 1
61679	GARY 7	115	MP	0.9542	0.9424	-1.180%	015 2

This document contains confidential and proprietary information of WAPA or TranServ International, Inc. Do not copy or distribute.

BUS/NAME		KV	Owner	Pre Project	Post Project	Delta Volt %	Contingency
62415	RDO 7	115	MP	0.9587	0.9469	-1.180%	60150 MNVLTAP4 230 63054 PANTHER4 230 1
62420	RDO TAP7	115	MP	0.9588	0.947	-1.180%	60150 MNVLTAP4 230 63054 PANTHER4 230 1
61641	HUBBARD7	115	MP	0.956	0.9442	-1.180%	NSP
61641	HUBBARD7	115	MP	0.9561	0.9443	-1.180%	NSP 1A
61687	MIDWAY 7	115	MP	0.9505	0.9388	-1.170%	015 2
61673	ARROWHD7	115	MP	0.9508	0.9391	-1.170%	015 2
61641	HUBBARD7	115	MP	0.961	0.9493	-1.170%	60150 MNVLTAP4 230 63054 PANTHER4 230 1
61554	AWHD1JCT	115	MP	0.9526	0.9411	-1.150%	015 2
61556	AWHD2JCT	115	MP	0.9527	0.9412	-1.150%	015 2
62415	RDO 7	115	MP	0.9602	0.9489	-1.130%	62980 MCLEOD 4 230 63054 PANTHER4 230 1
62420	RDO TAP7	115	MP	0.9604	0.9491	-1.130%	62980 MCLEOD 4 230 63054 PANTHER4 230 1
63197	CASS LKY	115	OTP	0.9261	0.9149	-1.120%	66710 NARY 7 115 66730 CPROLLA7 115 1
62420	RDO TAP7	115	MP	0.9606	0.9495	-1.110%	63379 RUGBY 4 230 67523 GLENBOR4 230 1
65025	E.COL. Y	230	NPPD	0.8936	0.8825	-1.110%	64806 E.COL. 4 230 65025 E.COL. Y 230 1
62415	RDO 7	115	MP	0.9497	0.9387	-1.100%	63051 HENNING4 230 63052 INMAN 4 230 1
62420	RDO TAP7	115	MP	0.9498	0.9388	-1.100%	63051 HENNING4 230 63052 INMAN 4 230 1
62415	RDO 7	115	MP	0.9604	0.9494	-1.100%	63379 RUGBY 4 230 67523 GLENBOR4 230 1
65025	E.COL. Y	230	NPPD	0.8933	0.8823	-1.100%	64783 COLMBUS4 230 64806 E.COL. 4 230 1
62420	RDO TAP7	115	MP	0.9522	0.9412	-1.100%	66750 FRONTIER 230 66754 MAPLE R4 230 1
62415	RDO 7	115	MP	0.9521	0.9411	-1.100%	66750 FRONTIER 230 66754 MAPLE R4 230 1
61641	HUBBARD7	115	MP	0.9519	0.941	-1.090%	63051 HENNING4 230 63052 INMAN 4 230 1
62415	RDO 7	115	MP	0.9556	0.9447	-1.090%	63329 WAHPETN4 230 66750 FRONTIER 230 1
62420	RDO TAP7	115	MP	0.9557	0.9448	-1.090%	63329 WAHPETN4 230 66750 FRONTIER 230 1
61641	HUBBARD7	115	MP	0.9543	0.9434	-1.090%	66750 FRONTIER 230 66754 MAPLE R4 230 1
61674	HANESRD7	115	MP	0.9479	0.937	-1.090%	015 2
61641	HUBBARD7	115	MP	0.9578	0.947	-1.080%	63329 WAHPETN4 230 66750 FRONTIER 230 1
64806	E.COL. 4	230	NPPD	0.871	0.8602	-1.080%	64783 COLMBUS4 230 64806 E.COL. 4 230 1
63247	CASS LK7	115	OTP	0.917	0.9062	-1.080%	66710 NARY 7 115 66730 CPROLLA7 115 1

This document contains confidential and proprietary information of WAPA or TranServ International, Inc. Do not copy or distribute.

BUS/NAME		KV	Owner	Pre Project	Post Project	Delta Volt %	Contingency
62415	RDO 7	115	MP	0.9484	0.9376	-1.080%	865
62420	RDO TAP7	115	MP	0.9485	0.9377	-1.080%	865
63248	CASS N 7	115	OTP	0.9167	0.9059	-1.080%	66710 NARY 7 115 66730 CPROLLA7 115 1
61641	HUBBARD7	115	MP	0.9506	0.9399	-1.070%	865
64948	RIVERDL4	230	NPPD	0.9078	0.8974	-1.040%	64733 AXTELL 3 345 64984 SWEET W3 345 1
61675	RIDGEVW7	115	MP	0.9489	0.9385	-1.040%	015 2
62415	RDO 7	115	MP	0.956	0.9456	-1.040%	63329 WAHPETN4 230 63331 FERGSFL4 230 1
62420	RDO TAP7	115	MP	0.9561	0.9457	-1.040%	63329 WAHPETN4 230 63331 FERGSFL4 230 1
61641	HUBBARD7	115	MP	0.9581	0.9478	-1.030%	63329 WAHPETN4 230 63331 FERGSFL4 230 1

This document contains confidential and proprietary information of WAPA or TranServ International, Inc. Do not copy or distribute.

Appendix C.2A 2010 Summer Off Peak Alternate Dispatch (Sinking to WAPA)

Table C-7A
2010 Summer Off Peak Alternate Dispatch (Sinking to WAPA)
Thermal Significantly Affected Facilities – N-1 Contingency Results

Limiting Element	Rating N/E	Owner	Pre Project		Post Project		DF	Contingency
			MVA	%	MVA	%		
HURON 4-CARPNTR4 230 kV Line 1	318 / 350	WAPA	310.9	97.8	350.5	110.2	9.90%	66514 HURON 4 230 66530 WATERTN4 230 2
WATERTN4-CARPNTR4 230 kV Line 1	318 / 350	WAPA	301.1	94.7	340.7	107.2	9.90%	66514 HURON 4 230 66530 WATERTN4 230 2
HURON 4-WATERTN4 230 kV Line 2	318 / 350	WAPA	302.4	95.1	341.9	107.5	9.88%	66530 WATERTN4 230 66834 CARPNTR4 230 1
HURON 4-WATERTN4 230 kV Line 2	318 / 350	WAPA	306.6	96.4	346.1	108.8	9.88%	66514 HURON 4 230 66834 CARPNTR4 230 1
SPLT RK4-SPLT RK7 230-115 kV Tx #7	336 / 437	XEL	310.3	92.3	342	101.8	7.93%	66562 EAGLE 4 230 66578 PAHOJA 4 230 1
SPLT RK4-SPLT RK7 230-115 kV Tx #7	336 / 437	XEL	322.1	95.9	353.8	105.3	7.93%	66523 SIOUXFL4 230 66578 PAHOJA 4 230 1
STORLA 4-WESNGTN4 230 kV Line 1	480 / 520	WAPA	453.8	94.5	485.2	101.1	7.85%	108 1
FTTHOMP4-FTRANDL4 230 kV Line 1	320 / 352	WAPA	304.3	95.1	328.8	102.8	6.13%	130 1
FTTHOMP4-FTRANDL4 230 kV Line 1	320 / 352	WAPA	327.8	102.4	352.2	110	6.10%	66507 FTTHOMP4 230 66516 LAKE PLATTE4 230 1
FTRANDL4-LAKE PLATTE4 230 kV Line 1	318 / 351	WAPA	317.1	99.7	341.5	107.4	6.10%	66507 FTTHOMP4 230 66509 FTRANDL4 230 1
FTTHOMP4-FTRANDL4 230 kV Line 1	320 / 352	WAPA	323.7	101.1	348	108.8	6.08%	66509 FTRANDL4 230 66516 LAKE PLATTE4 230 1
FTTHOMP4-LAKE PLATTE4 230 kV Line 1	318 / 351	WAPA	325.5	102.4	349.7	110	6.05%	66507 FTTHOMP4 230 66509 FTRANDL4 230 1
FTRANDL4-UTICAJC4 230 kV Line 1	318 / 350	WAPA	297.1	93.4	321.2	101	6.02%	140
FTTHOMP4-LAKE PLATTE4 230 kV Line 1	318 / 351	WAPA	303.6	95.5	327.4	103	5.95%	130 1
FTRANDL4-LAKE PLATTE4 230 kV Line 1	318 / 351	WAPA	295.2	92.8	318.9	100.3	5.93%	130 1
FTRANDL4-UTICAJC4 230 kV Line 1	318 / 350	WAPA	365.7	115	387.1	121.7	5.35%	130 1
FTTHOMP4-FTRANDL4 230 kV Line 1	320 / 352	WAPA	300.9	94	322.2	100.7	5.33%	66506 FTTHOMP3 345 66571 GR ISLD3 345 1
STORLA 4-STORLA 7 230-115 kV Tx #1	100 / 125	WAPA	79.5	79.5	100.1	100.1	5.15%	140
FTTHOMP4-LAKE PLATTE4 230 kV Line 1	318 / 351	WAPA	299.8	94.3	320.4	100.8	5.15%	66506 FTTHOMP3 345 66571 GR ISLD3 345 1
HANLON 4-SIOUXFL4 230 kV Line 1	320 / 352	WAPA	329.2	102.9	349.4	109.2	5.05%	66507 FTTHOMP4 230 66900 LETCHER4 230 1
HANLON 4-SIOUXFL4 230 kV Line 1	320 / 352	WAPA	331.9	103.7	351.8	109.9	4.98%	108 1
HANLON 4-SIOUXFL4 230 kV Line 1	320 / 352	WAPA	340.9	106.5	360.5	112.6	4.90%	160 1
HANLON 4-SIOUXFL4 230 kV Line 1	320 / 352	WAPA	316.3	98.9	335.1	104.7	4.70%	66523 SIOUXFL4 230 66900 LETCHER4 230 1

This document contains confidential and proprietary information of WAPA or TranServ International, Inc. Do not copy or distribute.

Limiting Element	Rating N/E	Owner	Pre Project		Post Project		DF	Contingency
			MVA	%	MVA	%		
HANLON 4-SIOUXFL4 230 kV Line 1	320 / 352	WAPA	325.3	101.7	343.7	107.4	4.60%	66506 FTTHOMP3 345 66571 GR ISLD3 345 1
FTRANDL4-UTICAJC4 230 kV Line 1	318 / 350	WAPA	319.4	100.4	337.7	106.2	4.58%	66507 FTTHOMP4 230 66900 LETCHER4 230 1
FTRANDL4-UTICAJC4 230 kV Line 1	318 / 350	WAPA	353.1	111	371.3	116.7	4.55%	66509 FTRANDL4 230 66565 SIOUXCY4 230 1
HANLON 4-SIOUXFL4 230 kV Line 1	320 / 352	WAPA	306.8	95.9	324.4	101.4	4.40%	66509 FTRANDL4 230 66526 UTICAJC4 230 1
SPLT RK4-SPLT RK7 230-115 kV Tx #7	336 / 437	XEL	321.7	95.7	338.8	100.8	4.28%	NSP - 1
FTRANDL4-UTICAJC4 230 kV Line 1	318 / 350	WAPA	327.2	102.9	344.2	108.2	4.25%	66513 HANLON 4 230 67122 STORLA 4 230 1
FTRANDL4-UTICAJC4 230 kV Line 1	318 / 350	WAPA	320.1	100.7	337.1	106	4.25%	66513 HANLON 4 230 66523 SIOUXFL4 230 1
FTRANDL4-UTICAJC4 230 kV Line 1	318 / 350	WAPA	311.2	97.9	328.2	103.2	4.25%	66506 FTTHOMP3 345 66571 GR ISLD3 345 1
FTRANDL4-UTICAJC4 230 kV Line 1	318 / 350	WAPA	308.2	96.9	324.8	102.2	4.15%	67122 STORLA 4 230 99617 WESNGTN4 230 1
FTRANDL4-UTICAJC4 230 kV Line 1	318 / 350	WAPA	336.4	105.8	352.9	111	4.13%	64783 COLMBUS4 230 66509 FTRANDL4 230 1
SPLT RK4-SPLT RK7 230-115 kV Tx #7	336 / 437	XEL	383.7	114.2	399.3	118.8	3.90%	60126 SPLT RK3 345 60130 SPLTRTA3 345 1
SPLT RK4-SPLT RK7 230-115 kV Tx #7	336 / 437	XEL	384.3	114.4	399.9	119	3.90%	60130 SPLTRTA3 345 66537 WHITE 3 345 1
SPLT RK4-SIOUXFL4 230 kV Line 1	386 / 425	XEL / WAPA	377.2	97.7	392.7	101.7	3.88%	60130 SPLTRTA3 345 66537 WHITE 3 345 1
SPLT RK4-SIOUXFL4 230 kV Line 1	386 / 425	XEL / WAPA	376.8	97.6	392.3	101.6	3.88%	60126 SPLT RK3 345 60130 SPLTRTA3 345 1
MCCOOL 3-GR ISLD3 345 kV Line 1	717 / 789	NPPD	736.8	102.8	751.5	104.8	3.68%	64902 MOORE 3 345 64933 PAULINE3 345 1
MCCOOL 3-GR ISLD3 345 kV Line 1	717 / 789	NPPD	780.8	108.9	794.9	110.9	3.53%	56451 MINGO 7 345 64943 REDWILO3 345 1
MCCOOL 3-GR ISLD3 345 kV Line 1	717 / 789	NPPD	710.7	99.1	724.4	101	3.42%	64733 AXTELL 3 345 64933 PAULINE3 345 1
LETCHER4-LETCHER7 230-115 kV Tx #1	100 / 125	WAPA	93	93	106.6	106.6	3.40%	140
MCCOOL 3-GR ISLD3 345 kV Line 1	717 / 789	NPPD	720.9	100.5	734.4	102.4	3.38%	64733 AXTELL 3 345 64984 SWEET W3 345 1
ELLENDL4-G132 POI 230 kV Line 1	319	WAPA	347.2	108.9	360.5	113.1	3.33%	67105 LELANDO3 345 67160 GROTON 3 345 1
COLMBUS4-FTRANDL4 230 kV Line 1	320 / 352	NPPD / WAPA	338.7	105.8	351.9	110	3.30%	160 1
STORLA 4-STORLA 7 230-115 kV Tx #1	100 / 125	WAPA	124.9	124.9	137.4	137.4	3.13%	66513 HANLON 4 230 66523 SIOUXFL4 230 1
STORLA 4-STORLA 7 230-115 kV Tx #1	100 / 125	WAPA	136.1	136.1	148.4	148.4	3.08%	66513 HANLON 4 230 67122 STORLA 4 230 1
ELLENDL4-ELLENDL7 230-115 kV Tx #1	100 / 125	WAPA	135.9	135.9	148.1	148.1	3.05%	63362 OAKES 4 230 63363 FORMAN 4 230 1
ELLENDL4-G132 POI 230 kV Line 1	319	WAPA	313.3	98.3	325.5	102.1	3.05%	140
ELLENDL4-ELLENDL7 230-115 kV Tx #1	100 / 125	WAPA	138.3	138.3	150.4	150.4	3.03%	63362 OAKES 4 230 67326 ELLENDL4 230 1

This document contains confidential and proprietary information of WAPA or TranServ International, Inc. Do not copy or distribute.

Table C-7B
2010 Summer Off Peak Alternate Dispatch (Sinking to WAPA)
Voltage Significantly Affected Facilities – N-1 Contingency Results

BUS/NAME		KV	Owner	Pre Project	Post Project	Delta Volt %	Contingency
62639	WILSNLK7	115	GRE	0.8986	0.8857	-1.290%	34006 LAKEFLD3 345 60286 NOBLES 3 345 1
62639	WILSNLK7	115	GRE	0.9029	0.8913	-1.160%	NSP 2C
62639	WILSNLK7	115	GRE	0.8959	0.8849	-1.100%	NSP - 1
62639	WILSNLK7	115	GRE	0.8975	0.8869	-1.060%	NSP 1B
62639	WILSNLK7	115	GRE	0.903	0.8925	-1.050%	NSP 2D
62639	WILSNLK7	115	GRE	0.8954	0.8853	-1.010%	60130 SPLTRTA3 345 66537 WHITE 3 345 1
62639	WILSNLK7	115	GRE	0.8954	0.8854	-1.000%	60126 SPLT RK3 345 60130 SPLTRTA3 345 1

This document contains confidential and proprietary information of WAPA or TranServ International, Inc. Do not copy or distribute.

Appendix C.3 2016 Summer Peak
Table C-8
2016 summer peak
South and East Dispatch
Thermal Significantly Affected Facilities – N-1 Contingency Results

Limiting Element	Rating N/E	Owner	Pre Project		Post Project		DF	Contingency
			MVA	%	MVA	%		
FTTHMP1T-FTTHOMP3 345-345 kV Tx #1	250 / 313	WAPA	192.9	77.2	284.1	113.7	22.80%	66275 FTTHMP2T 345 66506 FTTHOMP3 345 1
FTTHMP1T-FTTHOMP3 345-345 kV Tx #1	250 / 313	WAPA	192.9	77.2	284.1	113.7	22.80%	66275 FTTHMP2T 345 66507 FTTHOMP4 230 1
FTTHMP1T-FTTHOMP4 345-230 kV Tx #1	250 / 313	WAPA	193	77.2	284.2	113.7	22.80%	66275 FTTHMP2T 345 66506 FTTHOMP3 345 1
FTTHMP1T-FTTHOMP4 345-230 kV Tx #1	250 / 313	WAPA	193	77.2	284.2	113.7	22.80%	66275 FTTHMP2T 345 66507 FTTHOMP4 230 1
FTTHMP2T-FTTHOMP4 345-230 kV Tx #1	250 / 313	WAPA	192.9	77.2	284	113.6	22.78%	66272 FTTHMP1T 345 66506 FTTHOMP3 345 1
FTTHMP2T-FTTHOMP4 345-230 kV Tx #1	250 / 313	WAPA	192.9	77.2	284	113.6	22.78%	66272 FTTHMP1T 345 66507 FTTHOMP4 230 1
FTTHMP2T-FTTHOMP3 345-345 kV Tx #1	250 / 313	WAPA	192.8	77.1	283.9	113.6	22.78%	66272 FTTHMP1T 345 66506 FTTHOMP3 345 1
FTTHMP2T-FTTHOMP3 345-345 kV Tx #1	250 / 313	WAPA	192.8	77.1	283.9	113.6	22.78%	66272 FTTHMP1T 345 66507 FTTHOMP4 230 1
HURON 4-GI-0710 230 kV Line 1	318 / 350	WAPA	293.8	92.4	363.7	114.4	17.48%	FTTHOMP4-HURON 4 230 kV line 2
FTTHOMP4-HURON 4 230 kV Line 2	318 / 350	WAPA	266.3	83.7	335.8	105.6	17.38%	66514 HURON 4 230 66735 GI-0710 230 1
HURON 4-GI-0710 230 kV Line 1	318 / 350	WAPA	266.5	83.8	328.2	103.2	15.43%	130 1
HURON 4-GI-0710 230 kV Line 1	318 / 350	WAPA	266.4	83.8	327.2	102.9	15.20%	108 1
HURON 4-GI-0710 230 kV Line 1	318 / 350	WAPA	269.8	84.8	325.5	102.4	13.93%	67122 STORLA 4 230 99617 WESNGTN4 230 1
HANLON 4-SIOUXFL4 230 kV Line 1	240 / 264	WAPA	212.6	88.6	252.9	105.4	10.08%	108 1
HANLON 4-SIOUXFL4 230 kV Line 1	240 / 264	WAPA	218.6	91.1	257.8	107.4	9.80%	66507 FTTHOMP4 230 66900 LETCHER4 230 1
HANLON 4-SIOUXFL4 230 kV Line 1	240 / 264	WAPA	215.1	89.6	254.3	105.9	9.80%	66523 SIOUXFL4 230 66900 LETCHER4 230 1
HANLON 4-SIOUXFL4 230 kV Line 1	240 / 264	WAPA	201.9	84.1	240.4	100.2	9.63%	66506 FTTHOMP3 345 66571 GR ISLD3 345 1
HANLON 4-SIOUXFL4 230 kV Line 1	240 / 264	WAPA	221.1	92.1	258.7	107.8	9.40%	160 1
LELANDO4-LELND1TY 230-345 kV Tx #1	250 / 300	WAPA	347.5	139	373.5	149.4	6.50%	67105 LELANDO3 345 67202 LELND2TY 345 1
LELANDO4-LELND1TY 230-345 kV Tx #1	250 / 300	WAPA	347.5	139	373.5	149.4	6.50%	67106 LELANDO4 230 67202 LELND2TY 345 1
LELANDO3-LELND1TY 345-345 kV Tx #1	250 / 300	WAPA	347.5	139	373.5	149.4	6.50%	67105 LELANDO3 345 67202 LELND2TY 345 1
LELANDO3-LELND1TY 345-345 kV Tx #1	250 / 300	WAPA	347.5	139	373.5	149.4	6.50%	67106 LELANDO4 230 67202 LELND2TY 345 1
STORLA 4-STORLA 7 230-115 kV Tx #1	100 / 125	WAPA	108.7	108.7	127.5	127.5	4.70%	140
ANTELOP3-CHAR.CK3 345 kV Line 1	538 / 590	WAPA	542	100.7	559.8	104.1	4.45%	107 1
STORLA 4-STORLA 7 230-115 kV Tx #1	100 / 125	WAPA	121.7	121.7	137.1	137.1	3.85%	66513 HANLON 4 230 66523 SIOUXFL4 230 1
STORLA 4-STORLA 7 230-115 kV Tx #1	100 / 125	WAPA	139.7	139.7	155	155	3.83%	66513 HANLON 4 230 67122 STORLA 4 230 1
OAHE 4-OAHE 7 230-115 kV Tx #1	107 / 134	WAPA	98.5	92.1	112.8	105.4	3.58%	210
STORLA 4-STORLA 7 230-115 kV Tx #1	100 / 125	WAPA	96.1	96.1	109.5	109.5	3.35%	108 1

This document contains confidential and proprietary information of WAPA or TranServ International, Inc. Do not copy or distribute.

Table C-9
2016 Summer Peak
South and East Dispatch
Voltage Significantly Affected Facilities – System Intact Results

BUS/NAME		KV	Owner	Pre Project	Post Project	Delta Volt %	Contingency
66832	KYPMP 22	115	WAPA	0.9901	0.9734	-1.670%	System Intact
66901	LETCHER7	115	WAPA	1.0009	0.9846	-1.630%	System Intact
66900	LETCHER4	230	WAPA	1.0061	0.9899	-1.620%	System Intact
66525	TYNDALL7	115	WAPA	1.01	0.9973	-1.270%	System Intact
66526	UTICAJC4	230	WAPA	1.0121	0.9998	-1.230%	System Intact
66249	ARMOUR 8	69	WAPA	1.0093	0.9981	-1.120%	System Intact
66833	KYPMPS23	115	WAPA	0.9995	0.9884	-1.110%	System Intact
66399	VFODNES8	69	WAPA	0.9179	0.9071	-1.080%	System Intact
64775	CLRWATR7	115	NPPD	0.9461	0.9355	-1.060%	System Intact
67406	TRIPP 7	115	WAPA	1.0035	0.9933	-1.020%	System Intact
66279	HANLON28	69	WAPA	0.9682	0.9582	-1.000%	System Intact

Table C-10
2016 Summer Peak
South and East Dispatch
Voltage Significantly Affected Facilities – N-1 Contingency Results

BUS/NAME		KV	Owner	Pre Project	Post Project	Delta Volt %	Contingency
64739	BATTLCR7	115	NPPD	0.7098	0.6778	-3.200%	64739 BATTLCR7 115 64918 NORFK.N7 115 1
64776	CO.LINE7	115	NPPD	0.7311	0.7004	-3.070%	64739 BATTLCR7 115 64918 NORFK.N7 115 1
64915	NELIGH 7	115	NPPD	0.7566	0.7276	-2.900%	64739 BATTLCR7 115 64918 NORFK.N7 115 1
64775	CLRWATR7	115	NPPD	0.778	0.7489	-2.910%	64739 BATTLCR7 115 64918 NORFK.N7 115 1
64938	PETRSBG7	115	NPPD	0.802	0.7804	-2.160%	64739 BATTLCR7 115 64918 NORFK.N7 115 1
64794	CREITON7	115	NPPD	0.8199	0.7944	-2.550%	64739 BATTLCR7 115 64918 NORFK.N7 115 1
64822	FULERTN7	115	NPPD	0.8183	0.801	-1.730%	64739 BATTLCR7 115 64918 NORFK.N7 115 1
64726	ALBION 7	115	NPPD	0.8333	0.8166	-1.670%	64739 BATTLCR7 115 64918 NORFK.N7 115 1
64963	SPALDNG7	115	NPPD	0.8344	0.8198	-1.460%	64739 BATTLCR7 115 64918 NORFK.N7 115 1

This document contains confidential and proprietary information of WAPA or TranServ International, Inc. Do not copy or distribute.

BUS/NAME		KV	Owner	Pre Project	Post Project	Delta Volt %	Contingency
64929	ORD 7	115	NPPD	0.8417	0.8298	-1.190%	64739 BATTLCR7 115 64918 NORFK.N7 115 1
64776	CO.LINE7	115	NPPD	0.8505	0.8332	-1.730%	64739 BATTLCR7 115 64776 CO.LINE7 115 1
64915	NELIGH 7	115	NPPD	0.8528	0.8355	-1.730%	64739 BATTLCR7 115 64776 CO.LINE7 115 1
64926	ONEILL 7	115	NPPD	0.8663	0.8409	-2.540%	64739 BATTLCR7 115 64918 NORFK.N7 115 1
64915	NELIGH 7	115	NPPD	0.86	0.844	-1.600%	64776 CO.LINE7 115 64915 NELIGH 7 115 1
64907	N.LOUP 7	115	NPPD	0.8575	0.8459	-1.160%	64739 BATTLCR7 115 64918 NORFK.N7 115 1
64775	CLRWATR7	115	NPPD	0.8651	0.8468	-1.830%	64739 BATTLCR7 115 64776 CO.LINE7 115 1
64812	EMMET 7	115	NPPD	0.8766	0.8529	-2.370%	64739 BATTLCR7 115 64918 NORFK.N7 115 1
64775	CLRWATR7	115	NPPD	0.8715	0.8546	-1.690%	64776 CO.LINE7 115 64915 NELIGH 7 115 1
64730	ATKINSN7	115	NPPD	0.885	0.8626	-2.240%	64739 BATTLCR7 115 64918 NORFK.N7 115 1
64938	PETRSBG7	115	NPPD	0.8767	0.863	-1.370%	64739 BATTLCR7 115 64776 CO.LINE7 115 1
64822	FULERTN7	115	NPPD	0.8803	0.8687	-1.160%	64739 BATTLCR7 115 64776 CO.LINE7 115 1
64938	PETRSBG7	115	NPPD	0.8821	0.8696	-1.250%	64776 CO.LINE7 115 64915 NELIGH 7 115 1
64822	FULERTN7	115	NPPD	0.8846	0.8742	-1.040%	64776 CO.LINE7 115 64915 NELIGH 7 115 1
64977	STUART 7	115	NPPD	0.8968	0.8758	-2.100%	64739 BATTLCR7 115 64918 NORFK.N7 115 1
64794	CREITON7	115	NPPD	0.8919	0.8768	-1.510%	64739 BATTLCR7 115 64776 CO.LINE7 115 1
64812	EMMET 7	115	NPPD	0.8879	0.8779	-1.000%	64965 SPENCER7 115 66510 FTRANDL7 115 1
64963	SPALDNG7	115	NPPD	0.8894	0.8788	-1.060%	64739 BATTLCR7 115 64776 CO.LINE7 115 1
64730	ATKINSN7	115	NPPD	0.8924	0.8823	-1.010%	64965 SPENCER7 115 66510 FTRANDL7 115 1
64726	ALBION 7	115	NPPD	0.8937	0.8824	-1.130%	64739 BATTLCR7 115 64776 CO.LINE7 115 1
64794	CREITON7	115	NPPD	0.8973	0.8832	-1.410%	64776 CO.LINE7 115 64915 NELIGH 7 115 1
64751	BLMFLD 7	115	NPPD	0.9053	0.8857	-1.960%	64739 BATTLCR7 115 64918 NORFK.N7 115 1
64726	ALBION 7	115	NPPD	0.898	0.8878	-1.020%	64776 CO.LINE7 115 64915 NELIGH 7 115 1
64977	STUART 7	115	NPPD	0.9001	0.89	-1.010%	64965 SPENCER7 115 66510 FTRANDL7 115 1
64812	EMMET 7	115	NPPD	0.901	0.8909	-1.010%	64926 ONEILL 7 115 64965 SPENCER7 115 1
64730	ATKINSN7	115	NPPD	0.9051	0.8949	-1.020%	64926 ONEILL 7 115 64965 SPENCER7 115 1
66399	VFODNES8	69	WAPA	0.8882	0.8705	-1.770%	60127 SPLT RK4 230 66523 SIOUXFL4 230 1
66399	VFODNES8	69	WAPA	0.8883	0.8706	-1.770%	60127 SPLT RK4 230 60129 SPLT RK7 115 7
66399	VFODNES8	69	WAPA	0.9021	0.8899	-1.220%	160 1
66399	VFODNES8	69	WAPA	0.9091	0.8925	-1.660%	66506 FTTHOMP3 345 66571 GR ISLD3 345 1
66399	VFODNES8	69	WAPA	0.9093	0.8927	-1.660%	140
66399	VFODNES8	69	WAPA	0.9099	0.8954	-1.450%	160 2
66399	VFODNES8	69	WAPA	0.9099	0.8973	-1.260%	66513 HANLON 4 230 67122 STORLA 4 230 1
66399	VFODNES8	69	WAPA	0.9118	0.898	-1.380%	63875 RAUN 3 345 66564 SIOUXCY3 345 1

This document contains confidential and proprietary information of WAPA or TranServ International, Inc. Do not copy or distribute.

BUS/NAME		KV	Owner	Pre Project	Post Project	Delta Volt %	Contingency
66399	VFODNES8	69	WAPA	0.9102	0.8987	-1.150%	66562 EAGLE 4 230 66565 SIOUXCY4 230 1
66399	VFODNES8	69	WAPA	0.9122	0.8997	-1.250%	121

This document contains confidential and proprietary information of WAPA or TranServ International, Inc. Do not copy or distribute.

Appendix C.4: 2016 Summer Peak Sensitivity Analysis
Table C-11
2016 Summer Peak Sensitivity
South and East Dispatch
Thermal Significantly Affected Facilities– N-1 Contingency Sensitivity Results

Limiting Element	Rating N/E	Owner	Pre Project		Post Project		DF	Contingency
			MVA	%	MVA	%		
FTTHOMP4-FTTHOMP3 230/345 kV Tx #1	250 / 313	WAPA	187.8	75.1	277.3	110.9	22.38%	FTTHMP1T-FTTHOMP4 345-230 kV Tx #2
FTTHMP1T-FTTHOMP4 345-230 kV Tx #2	250 / 313	WAPA	187.7	75.1	277.1	110.8	22.35%	FTTHOMP4-FTTHOMP3 230/345 kV Tx #1
HURON 4-GI-0710 230 kV Line 1	318 / 350	WAPA	290.2	91.3	358.5	112.7	17.08%	66507 FTTHOMP4 230 66514 HURON 4 230 2
FTTHOMP4-HURON 4 230 kV Line 2	318 / 350	WAPA	262.9	82.7	330.7	104	16.95%	66514 HURON 4 230 66735 GI-0710 230 1
HURON 4-GI-0710 230 kV Line 1	318 / 350	WAPA	262.6	82.6	322.6	101.4	15.00%	130 1
WATERTN4-WATERSVC 230-20 kV Tx #1	150 / 188	WAPA	94.9	63.3	153.5	102.3	14.65%	130 1
WATERTN4-WATERSVC 230-20 kV Tx #1	150 / 188	WAPA	96	64	152.8	101.8	14.20%	66513 HANLON 4 230 67122 STORLA 4 230 1
WATERTN4-WATERSVC 230-20 kV Tx #1	150 / 188	WAPA	96.7	64.4	153.5	102.3	14.20%	66506 FTTHOMP3 345 66571 GR ISLD3 345 1
WATERTN4-WATERSVC 230-20 kV Tx #1	150 / 188	WAPA	98.5	65.7	153.5	102.3	13.75%	160 1
HURON 4-GI-0710 230 kV Line 1	318 / 350	WAPA	266.2	83.7	320.5	100.8	13.58%	67122 STORLA 4 230 99617 WESNGTN4 230 1
WATERTN4-WATERSVC 230-20 kV Tx #1	150 / 188	WAPA	99.3	66.2	153.5	102.3	13.55%	330
WATERTN4-WATERSVC 230-20 kV Tx #1	150 / 188	WAPA	100.9	67.3	153.6	102.4	13.18%	66529 WATERTN3 345 67160 GROTON 3 345 1
WATERTN4-WATERSVC 230-20 kV Tx #1	150 / 188	WAPA	102.3	68.2	153.5	102.3	12.80%	108 1
WATERTN4-WATERSVC 230-20 kV Tx #1	150 / 188	WAPA	104.4	69.6	153.5	102.3	12.28%	107 1
WATERTN4-WATERSVC 230-20 kV Tx #1	150 / 188	WAPA	110.5	73.6	153.5	102.3	10.75%	66702 BARNES 4 230 66747 BAR1COL9 34.5 1
HANLON 4-SIOUXFL4 230 kV Line 1	240 / 264	WAPA	208.2	86.7	246.9	102.9	9.68%	108 1
HANLON 4-SIOUXFL4 230 kV Line 1	240 / 264	WAPA	216.6	90.3	255.1	106.3	9.63%	66507 FTTHOMP4 230 66900 LETCHER4 230 1
HANLON 4-SIOUXFL4 230 kV Line 1	240 / 264	WAPA	213.2	88.8	251.6	104.8	9.60%	66523 SIOUXFL4 230 66900 LETCHER4 230 1
HANLON 4-SIOUXFL4 230 kV Line 1	240 / 264	WAPA	220.4	91.8	257.5	107.3	9.28%	160 1
WATERTN4-WATERSVC 230-20 kV Tx #1	150 / 188	WAPA	118.2	78.8	153.4	102.3	8.80%	66700 PILSBRY4 230 66702 BARNES 4 230 1
WATERTN4-WATERSVC 230-20 kV Tx #1	150 / 188	WAPA	121	80.7	153.5	102.3	8.13%	66700 PILSBRY4 230 66754 MAPLE R4 230 1
LELANDO3-LELND1TY 345-345 kV Tx #1	250 / 300	WAPA	346.6	138.6	372.2	148.9	6.40%	67105 LELANDO3 345 67202 LELND2TY 345 1
LELANDO3-LELND1TY 345-345 kV Tx #1	250 / 300	WAPA	346.6	138.6	372.2	148.9	6.40%	67106 LELANDO4 230 67202 LELND2TY 345 1
LELANDO4-LELND1TY 230-345 kV Tx #1	250 / 300	WAPA	346.6	138.6	372.1	148.9	6.38%	67105 LELANDO3 345 67202 LELND2TY 345 1
LELANDO4-LELND1TY 230-345 kV Tx #1	250 / 300	WAPA	346.6	138.6	372.1	148.9	6.38%	67106 LELANDO4 230 67202 LELND2TY 345 1
STORLA 4-STORLA 7 230-115 kV Tx #1	100 / 125	WAPA	105.9	105.9	123.8	123.8	4.48%	140

This document contains confidential and proprietary information of WAPA or TranServ International, Inc. Do not copy or distribute.

Limiting Element	Rating N/E	Owner	Pre Project		Post Project		DF	Contingency
			MVA	%	MVA	%		
ANTELOP3-CHAR.CK3 345 kV Line 1	538 / 590	WAPA	540.8	100.5	558.1	103.7	4.33%	107 1
STORLA 4-STORLA 7 230-115 kV Tx #1	100 / 125	WAPA	119.6	119.6	134.2	134.2	3.65%	66513 HANLON 4 230 66523 SIOUXFL4 230 1
STORLA 4-STORLA 7 230-115 kV Tx #1	100 / 125	WAPA	137.6	137.6	152.1	152.1	3.63%	66513 HANLON 4 230 67122 STORLA 4 230 1
STORLA 4-STORLA 7 230-115 kV Tx #1	100 / 125	WAPA	92	92	104.2	104.2	3.05%	108 1

Table C-12
2016 Summer Peak Sensitivity
South and East Dispatch
Voltage Significantly Affected Facilities - System Intact Sensitivity Results

BUS/NAME		KV	Owner	Pre Project	Post Project	Delta Volt %	Contingency
66832	KYPMP 22	115	WAPA	0.9898	0.9742	-1.560%	System Intact
66901	LETCHER7	115	WAPA	1.0006	0.9853	-1.530%	System Intact
66900	LETCHER4	230	WAPA	1.0058	0.9907	-1.510%	System Intact
66525	TYNDALL7	115	WAPA	1.0074	0.9945	-1.290%	System Intact
66526	UTICAJC4	230	WAPA	1.0112	0.9991	-1.210%	System Intact
66249	ARMOUR 8	69	WAPA	1.0068	0.9955	-1.130%	System Intact
66833	KYPMPS23	115	WAPA	0.9984	0.9875	-1.090%	System Intact
64775	CLRWATR7	115	NPPD	0.9431	0.9324	-1.070%	System Intact
66399	VFODNES8	69	WAPA	0.9175	0.907	-1.050%	System Intact
67409	MENNOJT7	115	WAPA	1.0101	0.9996	-1.050%	System Intact
67406	TRIPP 7	115	WAPA	1.0027	0.9927	-1.000%	System Intact

This document contains confidential and proprietary information of WAPA or TranServ International, Inc. Do not copy or distribute.

Table C-13
2016 Summer Peak Sensitivity
South and East Dispatch
Voltage Significantly Affected Facilities - N-1 Contingency Sensitivity Results

BUS/NAME		KV	Owner	Pre Project	Post Project	Delta Volt %	Contingency
64739	BATTLCR7	115	NPPD	0.7008	0.6754	-2.540%	64739 BATTLCR7 115 64918 NORFK.N7 115 1
64776	CO.LINE7	115	NPPD	0.7225	0.6981	-2.440%	64739 BATTLCR7 115 64918 NORFK.N7 115 1
64915	NELIGH 7	115	NPPD	0.7485	0.7253	-2.320%	64739 BATTLCR7 115 64918 NORFK.N7 115 1
64775	CLRWATR7	115	NPPD	0.7693	0.7467	-2.260%	64739 BATTLCR7 115 64918 NORFK.N7 115 1
64794	CREITON7	115	NPPD	0.8137	0.7927	-2.100%	64739 BATTLCR7 115 64918 NORFK.N7 115 1
64926	ONEILL 7	115	NPPD	0.8578	0.8401	-1.770%	64739 BATTLCR7 115 64918 NORFK.N7 115 1
64938	PETRSBG7	115	NPPD	0.7959	0.779	-1.690%	64739 BATTLCR7 115 64918 NORFK.N7 115 1
64751	BLMFLD 7	115	NPPD	0.9013	0.8845	-1.680%	64739 BATTLCR7 115 64918 NORFK.N7 115 1
66399	VFODNES8	69	WAPA	0.8874	0.8706	-1.680%	60127 SPLT RK4 230 66523 SIOUXFL4 230 1
66399	VFODNES8	69	WAPA	0.8875	0.8707	-1.680%	60127 SPLT RK4 230 60129 SPLT RK7 115 7
66399	VFODNES8	69	WAPA	0.9071	0.8907	-1.640%	330
66399	VFODNES8	69	WAPA	0.9087	0.893	-1.570%	66506 FTTHOMP3 345 66571 GR ISLD3 345 1
66399	VFODNES8	69	WAPA	0.9087	0.8933	-1.540%	140
64812	EMMET 7	115	NPPD	0.8676	0.8532	-1.440%	64739 BATTLCR7 115 64918 NORFK.N7 115 1
66399	VFODNES8	69	WAPA	0.9093	0.8951	-1.420%	160 2
64775	CLRWATR7	115	NPPD	0.8665	0.8525	-1.400%	64776 CO.LINE7 115 64915 NELIGH 7 115 1
64775	CLRWATR7	115	NPPD	0.8589	0.8451	-1.380%	64739 BATTLCR7 115 64776 CO.LINE7 115 1
64915	NELIGH 7	115	NPPD	0.8555	0.842	-1.350%	64776 CO.LINE7 115 64915 NELIGH 7 115 1
64822	FULERTN7	115	NPPD	0.8134	0.8	-1.340%	64739 BATTLCR7 115 64918 NORFK.N7 115 1
64915	NELIGH 7	115	NPPD	0.8473	0.834	-1.330%	64739 BATTLCR7 115 64776 CO.LINE7 115 1
64776	CO.LINE7	115	NPPD	0.8449	0.8316	-1.330%	64739 BATTLCR7 115 64776 CO.LINE7 115 1
66399	VFODNES8	69	WAPA	0.9113	0.898	-1.330%	63875 RAUN 3 345 66564 SIOUXCY3 345 1
64726	ALBION 7	115	NPPD	0.8286	0.8156	-1.300%	64739 BATTLCR7 115 64918 NORFK.N7 115 1
64730	ATKINSN7	115	NPPD	0.8758	0.8636	-1.220%	64739 BATTLCR7 115 64918 NORFK.N7 115

This document contains confidential and proprietary information of WAPA or TranServ International, Inc. Do not copy or distribute.

BUS/NAME		KV	Owner	Pre Project	Post Project	Delta Volt %	Contingency
							1
64794	CREITON7	115	NPPD	0.8877	0.8756	-1.210%	64739 BATTLCR7 115 64776 CO.LINE7 115 1
64794	CREITON7	115	NPPD	0.8938	0.8817	-1.210%	64776 CO.LINE7 115 64915 NELIGH 7 115 1
66399	VFODNES8	69	WAPA	0.9117	0.8997	-1.200%	121
66399	VFODNES8	69	WAPA	0.9021	0.8904	-1.170%	160 1
66399	VFODNES8	69	WAPA	0.9091	0.8974	-1.170%	66513 HANLON 4 230 67122 STORLA 4 230 1
66399	VFODNES8	69	WAPA	0.9098	0.8987	-1.110%	66562 EAGLE 4 230 66565 SIOUXCY4 230 1
64963	SPALDNG7	115	NPPD	0.83	0.8191	-1.090%	64739 BATTLCR7 115 64918 NORFK.N7 115 1
64938	PETRSBG7	115	NPPD	0.8789	0.8683	-1.060%	64776 CO.LINE7 115 64915 NELIGH 7 115 1
64938	PETRSBG7	115	NPPD	0.8724	0.8623	-1.010%	64739 BATTLCR7 115 64776 CO.LINE7 115 1

This document contains confidential and proprietary information of WAPA or TranServ International, Inc. Do not copy or distribute.

Appendix D: Constrained Interface Results

- GI0824-sp10-ties-output.txt
- GI0824-urg-so10-ties-output.txt
- GI0824-urg-so10-ties-Out-Wapa Disp.txt
- GI0824-sp16-ties-Output.txt
- GI0824-sp16-ties-Out-SENS.txt

Provided Separately

This document contains confidential and proprietary information of WAPA or TranServ International, Inc. Do not copy or distribute.

Appendix E: Contingency

- 2010 Summer-Peak.con
- 2010 Summer offpeak-AC.con
- 2016 Summer-Peak-AC.con

Provided Separately

This document contains confidential and proprietary information of WAPA or TranServ International, Inc. Do not copy or distribute.