BASIN ELECTRIC POWER COOPERATIVE

GI-0715 System Impact Study

Project Name:
Interconnection Queue # : GI-0715
Queue Date: February 23th, 2007
Fuel Type : Wind
Turbine Type : GE 1.6 MW turbines
Generation Amount : 100 MW
Point of Interconnection : Ecklund 230 kV Substation
Point of Interconnection County : Burleigh, North Dakota
Requested Service : Network Resource
In Service Date: December 2010

Prepared by:
Basin Electric Power Cooperative
Transmission Services Division
Bismarck, ND
August, 2010

Executive Summary

The Upper Great Plains Region (UGPR) of the Western Area Power Administration (Western) has received a completed application for an interconnection request of 100 MW of generation located near Western's Hilken 230 kV substation. The request would be a 100 MW wind generating facility to be connected to the Western/Heartland Consumers Power District/Basin Electric Power Cooperative Integrated System (IS) at the Ecklund 230 kV substation. This request is identified as request number GI-0715 on Western's Generation Interconnection Queue posted on its Open Access Same-Time Information System (OASIS).

The interconnection customer has submitted a Transmission Service Requests (TSR) in Western's OASIS Delivery Queue. The delivery of this generator was evaluated as a network resource and sunk to Basin Electric generation away from the interconnection request.

The scope of this system impact study is to identify and resolve possible criteria violations that may limit the ability of the generator to interconnect. In accordance with WAPA system impact study practices, an interconnection request is required to mitigate stability impacts, short-circuit impacts and injection related steady state impacts (local area thermal and voltage impacts under system intact and contingency conditions).

Steady-State Analysis:

The interconnection of the proposed generator does impact some of the interconnecting transmission facilities. The steady-state criteria violations flagged were based on the modeled delivery of the generator's output of 100 MW sunk to load or to other generation.

The analysis was performed for both near-term cases (2010 timeframe) and out-year cases (2020 timeframe) for both peak and off peak scenarios. The following conclusions are drawn:

- One system intact violation was introduced by this project.

CIRCUIT/WINDING			TO			CKT	RATE A	RATE C	so10aa	sp10aa	w p10aa
#	NAME	#	NAME			#	MVA	MVA	MVA	MVA	MVA
652426	BISMARK4	230.0	652466	HILKEN 4	230.0	1	319	351	321	328	306

- Post-contingency overloads were observed on the following:

CIRCUIT/WINDING			TO			CKT	RATE A	RATE C	so10aa	sp10aa	w p10aa	CONTINGENCY				
#	NAME	#	NAME			#	MVA	MVA	MVA	MVA	MVA	FROM		TO		CKT
652426	BISMARK4	230.0	652466	HILKEN 4	230.0	1	319	351	392	396	374	652441	GARRISN4	230.0 652444	JAMESTN4	230.0 1
652442	GARRISN7	115.0	661008	BEULAH 7	115.0	1	120	121	116.4	128	115.4	652426	BISMARK4	230.0 652466	HILKEN 4	230.0 1
652426	BISMARK4	230.0	652456	WASHBRN4	230.0	1	320.0	352		321.18		652426	BISMARK4	230.0 652466	HILKEN 4	230.0 1
652456	WASHBRN4	230.0	659106	LELANDO4	230.0	1	319.0	351		330.48		652426	BISMARK4	230.0 652466	HILKEN 4	230.0 1

Hilken – Bismarck 230 kV (Rate A/Rate B/ Rate C – 319/398/351 MVA): This transmission line, which is one of the two outlets for GI-0715 indicated a maximum loading of 396 MVA during N-1 conditions (2010 summer peak load conditions; outage of the Garrison – Jamestown 230 kV) which translates into 121% on 319 MVA rating (Rate-A in PSS/E). The maximum pre-project loading was 312 MVA. This 230 kV line from Hilken to Bismarck will need to be uprated in order to mitigate the higher loading during system intact and contingency situations. An uprate to 391 MVA can be achieved through CT tap ratio changes and other terminal fixes at Bismarck and Hilken.

It was demonstrated through a sensitivity analyses that when backing down the Leland Olds, AVS, and Garrison stations to their cruise levels with the addition of this project, that

the loading on the Hilken – Bismarck 230 kV line fell to 387 MVA. This is less than the 391 capable rating on the Bismarck – Hilken 230 kV line.

Bismarck – Washburn – Leland Olds 230 kV (Rate A/Rate B/ Rate C – 320/398/352 MVA): This second circuit of the Garrison – Bismarck 230 kV lines indicated a maximum loading of 330 MVA during N-1 conditions (2010 summer peak load conditions; outage of the Hilken – Bismarck 230 kV) which translates into 103% on 319 MVA rating (Rate-A in PSS/E). The maximum pre-project loading was 321 MVA. The loading on this 230 kV line is below its emergency ratings.

Garrison – Beulah 115 kV (Rate A/Rate B/ Rate C – 120/128/121 MVA): This 115 kV transmission line out of Garrison indicated a maximum loading of 128 MVA for outage conditions (2010 summer peak load conditions; outage of the Hilken – Bismarck 230 kV) which translates into 106.6% on 120 MVA rating (Rate-A in PSS/E). The maximum pre-project loading was 118.5 MVA. This 115 kV line from Garrison to Beulah has an emergency rating of 121 MVA. An uprate to 132 MVA can be achieved through CT tap ratio changes and a relay fix at the Pick City tap located on the Garrison – Beulah 115 kV line.

The outyear cases did not show any additional loading or voltage violations.

Prior outages were not studied in full detail as there is a Special Protection Scheme (SPS) in place up at Garrison for prior outage conditions. The addition of this project will require a full restudy of that scheme which may require an extension of the SPS's reach to mitigate the additional loading from the project.

Short-Circuit Analysis:

The addition of the proposed GI-0715 project increases fault currents in the study area. Initial analysis of breakers showed that all breakers were below their interrupting limit. All breaker ratings were not available for the impacted substations. When this information does become available, the calculated fault currents should be compared against the breaker ratings in order to determine whether existing breakers at these substations could become overstressed and whether breaker replacements may be required.

Stability Analysis:

The addition of the generator did not show any stability violations. Sensitivities were completed to determine the affect prior queued projects may have on the stability of the system.

Constrained Interface Analysis:

The study also evaluated the impact of the proposed project on constrained interfaces in the MAPP and MISO systems. They are provided for informational purposes only, to identify potential third party flow gate issues for the requested delivery component of the transmission.

Injection Related Constraints:

Of the facilities listed in this report, the facilities listed below would be considered injection related constraints. These facilities would need to be built, uprated, or an operating guide developed, prior to this generation coming online:

- New 230 kV bay position and associated bus work at Ecklund for the interconnection of the radial 230 kV line to the Baldwin 230/34.5 kV collector sub
- Uprate Hilken – Bismarck 230 kV line to 391 MVA
- Mitigate the loading on the Garrison – Beulah 115 kV to at least 132 MVA emergency.
- Restudy the Garrison Special Protection Scheme for prior outage conditions.

Study Summary:

These study results indicate the addition of the interconnection request GI-0715 will not degrade the reliability of the MAPP system. It does result in some unacceptable loading conditions due to the interconnection of the project. The study results demonstrate that the Western Area Power Administration (Western)/ Basin Electric Power Cooperative (Basin)/ Heartland Consumers Power District Integrated System (IS) is capable of accommodating the interconnection request by mitigating the impacted facilities.

The results of this study are based on available data and assumptions made at the time of conducting this study. If any of the data and/or assumptions made in developing the study models change, the results provided in this report may not apply.

Table of Contents

Executive Summary 2
1.0 Introduction 6
2.0 Description of Request 6
2.1 Area Information 7
2.2.1 Existing System 7
2.2.2 Previous studies 8
3.0 Study Methodology and Criteria 9
3.1 Ad Hoc Study Group 9
3.2 Steady-State Analysis Criteria 9
3.2.1 Thermal Analysis Criteria 9
3.2.2 Voltage Analysis Criteria 10
3.3 Constrained Interface Analysis 10
3.4 Computer Programs and Input Files 10
3.5 Model Development 10
3.5.1 GI-0715 Modeling 10
3.5.2 Existing Generation levels 11
3.5.3 Prior Queued Projects 13
3.5.4 Steady State Model Cases 14
3.5.5 Transient Stability Model Development 15
3.6 Steady State Power flow Analysis Procedure 16
3.7 Contingency Analysis 16
4.0 Steady State Analysis Results 18
4.1 Near Term Results 18
4.1.1 Near Term - System Intact 18
4.1.2 Near Term – Contingency Conditions 18
4.2 Out Year Results 19
4.3 Thermal Sensitivities 19
4.3.1 Sensitivity A – BEPC/Garrison Generation at Cruise 19
4.4 Prior Outages 20
4.5 Constrained Interface Analysis 20
4.6 Steady State Conclusions 25
5.0 Stability Analysis 26
5.1 Computer Programs and Input Files 26
5.2 Model Development 26
5.3 Disturbance Definitions 26
5.4 Performance Criteria 27
5.5 Stability Results 27
5.5.1 Regional Stability Results 27
5.5.2 Local Stability Results 27
5.6 Prior Outage Stability Analysis 27
5.6.1 Prior Outage of Center – Jamestown 345 kV (eb) 27
5.6.2 Prior Outage of Leland Olds – Ft. Thompson 345 kV (ag) 28
5.7 Stability Conclusions 28
6.0 Short Circuit Analysis 30
6.1 Base Case Development 30
6.2 Short-Circuit Calculations 30
7.0 Conclusion 32
APPENDICIES 35

1.0 Introduction

The purpose of this document is to provide information to the MAPP Design Review Subcommittee (DRS) regarding the addition of a new 100 MW wind farm fed into the WAPA Ecklund 230 kV substation. This request is labeled GI-0715 in the Integrated System's (IS) queue. This study examines steady state power flow analysis, dynamic stability analysis, and constrained interface analysis of the 100 MW wind farm interconnected to the bulk electric system.

2.0 Description of Request

The new generator has requested a point of interconnection to be located near Baldwin, ND, feeding into WAPA's Ecklund 230 kV substation. The geographic location of this request can be seen in the following figure 2.1 which is taken from the MRO regional map.

Figure Removed due to Critical Energy Infrastructure Information (CEII) Restrictions

Figure 2.1 –GI0715 Geographic Location

This 100 MW request consists of 66 GE 1.5 MW turbines. A collector system would be built that would feed several feeder circuits into a centralized 230/34.5 kV collector sub (Baldwin) connecting the wind farm to the Ecklund 230 kV bus via a nine mile 230 kV line. A one-line of the generator interconnection into the bulk system can be seen in Figure 2.2.

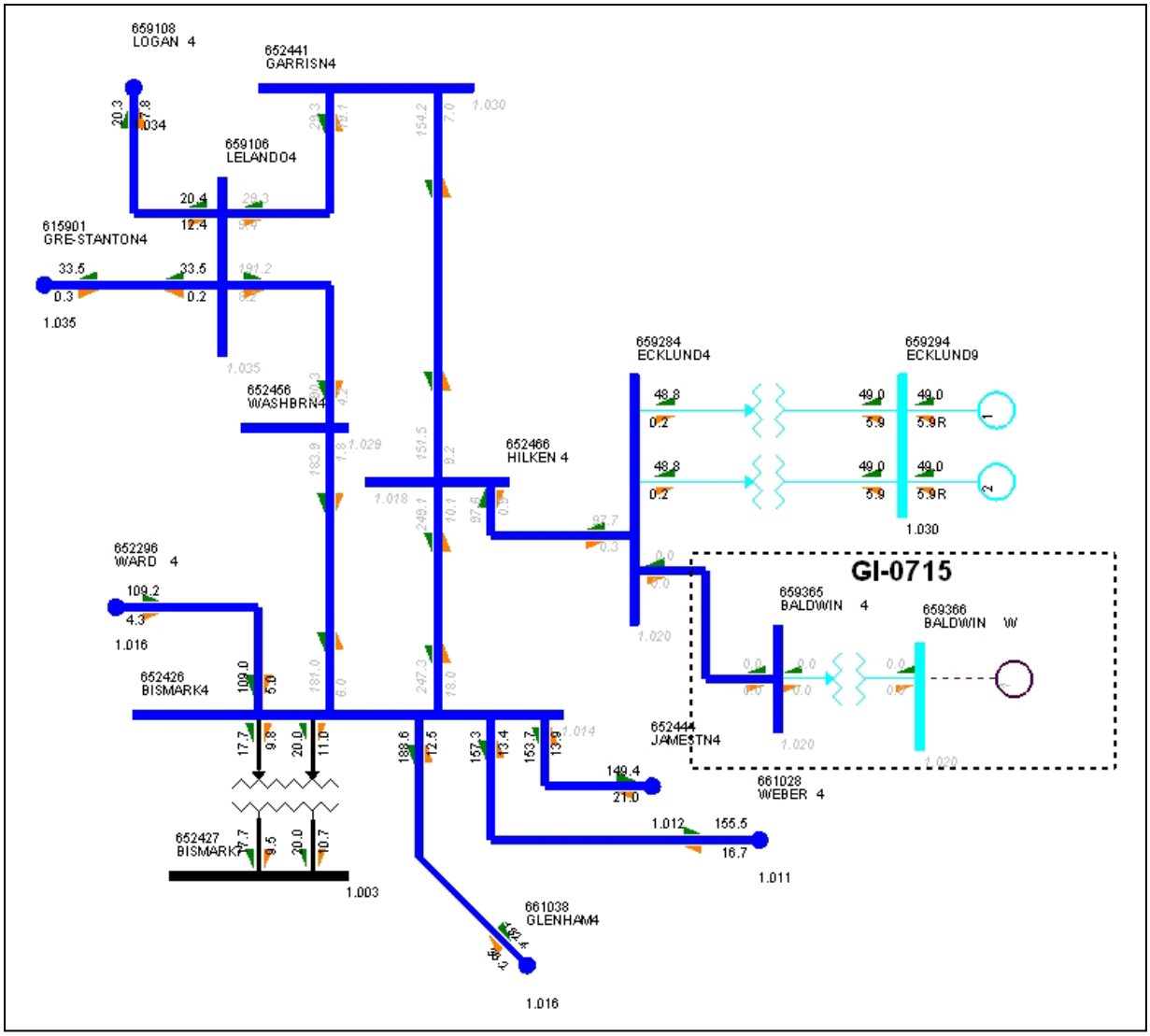

Figure 2.2 – One-line of the GI-0715 and surrounding transmission

For purposes of this study, the wind farm was modeled as a single unit located at a new Baldwin 230/34.5 kV substation connecting to the Ecklund 230 kV substation via the radial 230 kV line.

2.1 Area Information

The following section lays out the facilities in the immediate vicinity of the interconnection request as well as identifies other studies that have been done for projects in the region.

2.2.1 Existing System

The system in the vicinity of this project will look at all of the connections from the Hilken 230 kV substation. Hilken is a 230 kV ring bus on one of circuits of the double circuit line from Garrison – Bismarck. The other 230 kV circuit from Garrison – Bismarck includes a connection to the Leland Olds Station and a load serving delivery point at Washburn. Up at Garrison there is approximately 500 MW's of hydro generation and several 115 kV line connections in addition to the 230 kV outlet to Jamestown. The Bismarck 230 kV is a centralized hub with two circuits heading towards Jamestown as well as a circuit heading towards Heskett station and one towards Oahe in South Dakota.

2.2.2 Previous studies

This interconnection request falls in an area where other requests have been studied and are currently in service. Those requests that are prior queued to this and have been studied include the following:

- GI-0508 – 50 MW wind farm interconnected at Ecklund 230 kV – In Service
- GI-0615 – 50 MW wind farm interconnected at Ecklund 230 kV – In Service
- GI-0503 & GI-0720 – 115.5 MW wind farm interconnected at Nelson tap – In Service

3.0 Study Methodology and Criteria

3.1 Ad Hoc Study Group

An Ad-Hoc study group of surrounding Transmission Owner's (TO's) and Transmission Users (TUM's) was arranged to get input for the study scope and feedback on the report. Members from the following companies were invited to participate in this group.

- Basin Electric
- East River Electric
- Great River Energy
- Manitoba Hydro
- MidAmerican Energy Company
- Minnkota Power Cooperative
- MISO
- Missouri River Energy Services
- Montana Dakota Utilities
- Northwestern
- Ottertail Power Company
- WAPA
- XCEL

3.2 Steady-State Analysis Criteria

The purpose of steady-state analysis is to analyze the impact of the proposed plant on transmission system facilities under steady-state conditions. It involves two distinct analyses: thermal analysis and voltage analysis.

Contingencies were solved using the GRE Contingency iplan. Phase shifters and transformer taps were enabled. Non-convergent contingencies from these analyses (primarily due to switching back and forth of transformer taps and switched shunts) were solved manually and their violations were appended to the results.

Thermal violations were flagged based on continuous facility rating (Rate A in PSS/E). Post-contingency power flows in excess of 100% of the Rate A were recorded. Facility loadings with and without the GI-0715 generator were tabulated and compared. If several contingencies overload a given transmission facility, only the worst ten contingencies are reported. Overloads on generator step up transformers are not reported.

3.2.1 Thermal Analysis Criteria

The incremental impact of the GI-0715 unit on thermal loading of transmission facilities was evaluated by comparing transmission system power flows with and without the proposed generator. The criteria for this study are the standard 5% PTDF, 3% OTDF, and 1 MW criteria.

The Contingency analysis was run to flag any loading violations above 100% of Rate A, during system intact and contingency scenarios. Any violations outside these limits were evaluated. A change in loading increase of less than 1 MW is considered a negligible effect.

3.2.2 Voltage Analysis Criteria

The incremental impact of the GI-0715 unit on voltage performance of the transmission facilities was evaluated by comparing transmission system voltages with and without the proposed generator. The criteria for this study are the standard as seen in Table 3.1 below.

The contingency analysis was run to flag any voltage below 0.97 p.u. and any voltage above 1.05 p.u. during system intact and contingency scenarios. Any violations outside these limits were evaluated. A change in voltage of less than +/- 1% is considered a negligible effect.

System	Base kV	System Intact Conditions		N-1 Contingency Conditions	
		Max (pu)	Min (pu)	Max (pu)	Min (pu)
Northern MAPP	110-500 kV	1.05	0.95	1.10	0.90
MP (Area 608)	110-500 kV	1.05	1.00	1.05	0.95
MP Western Division (Area 610)	115-230 kV	1.05	0.96	1.05	0.92
OTP (Area 626)	230-345 kV	1.05	0.97	1.10	0.92
	115 kV	1.07	0.97	1.10	0.92

Table 3.1 – Voltage Criteria

3.3 Constrained Interface Analysis

The purpose of the constrained interface analysis is to calculate the impact of the proposed project on specified interfaces in the MAPP transmission system. The MAPP DFCALC constrained interface analysis program was used for this purpose. This analysis is used to illustrate the proposed delivery of the project on area interfaces.

3.4 Computer Programs and Input Files

The PSS/E Power System Simulator for Engineers was used for this study. PTI PSS/ETM Rev 29.4 and Version 6.6B of the Digital FORTRAN Compiler was utilized to perform all aspects of the stability study work. PTI PSS/E Rev 32.0.3 was also used for the thermal analysis and other purposes.

3.5 Model Development

In order to properly study the GI-0715 interconnection, several models were considered for this project. The dynamic models were derived from the NMORWG package dated 5-11-2010, and the steady state models were developed from the 2009 MNTACT models.

3.5.1 GI-0715 Modeling

The GI-0715 request represents a 100 MW wind farm comprised of 64 1.6 MW GE turbines. This wind farm will be fed into the Ecklund 230 kV substation via a 9 mile 230 kV line. The generator was modeled on a 34.5 kV bus connected to the Baldwind 230 kV sub, which can be seen in Figure 2.2. One-line diagrams of the area can be seen in Appendix B.

The project was modeled with the following specifications.

- 100 MW Wind Farm – GE type turbines (64 x 1.6 MW turbines)

- Reactive capability to control power factor between 95 % supplying vars to 95% consuming vars
- Qmax: 32 Mvar
- Qmin: -32 Mvar
- Scheduled Voltage set to 1.03 at POI (Baldwin 230 kV)
- Dynamics data can be found in appendix A.3

3.5.2 Existing Generation levels

Area generation whether existing or a planned project is turned on in the area to demonstrate a worst case scenario. Existing and DRS approved area generation is energized at Pmax or Urge. The full table of existing generation can be seen in the following table 3.2.

				WP10AA	SP10AA	SO10AA	SP20AA	SO20AA
BUS#	BUS NAME	ID	PMAX	PGEN	PGEN	PGEN	PGEN	PGEN
659103	ANTELOPE VALLEY G1	1	480	480	480	480	480	480
659107	ANTELOPE VALLEY G2	2	480	481.2	481.2	481.2	481.2	481.2
659110	LELAND OLDS G1	1	230	240	240	240	240	240
659111	LELAND OLDS G2	2	475	487.2	487.2	487.2	487.2	487.2
659270	CULBERTSON GEN	1	100	100	100	85	100	85
659270	CULBERTSON GEN	2	7.5	5.5	5.5	5.5	5.5	5.5
652434	FARGO SVC 13.2	1	0	0	0	0	0	0
652410	FORT PECK G3	3	42	38	32	32	42	42
652414	FORT PECK G4	4	48	38	32	32	48	48
652415	FORT PECK G5	5	49	38	32	32	49	49
652457	GARRISON G1	1	96	102	102	102	102	102
652458	GARRISON G2	2	96	102	102	102	102	102
652459	GARRISON G3	3	96	102	102	102	102	102
652460	GARRISON G4	4	99	102	102	102	102	102
652461	GARRISON G5	5	99	102	102	102	102	102
620315	BIG STONE G1	1	477.4	495	495	495	495	495
657748	CENTER 2G	2	491	491	491	491	491	491
657749	CENTER G1	1	260	264	264	264	264	264
661015	COYOTE G	1	453	211	211	211	211	211
661044	HESKETT G1	1	30.2	32	32	32	32	32
661045	HESKETT G2	2	81.6	79.6	79.6	79.6	79.6	79.6
620323	HOOT LAKE 2G	2	63.6	63.6	63.6	18.1	63.6	20
620324	HOOT LAKE 3G	3	88.1	88.1	88.1		88.1	
615001	COAL CREEK G1	1	620	618.6	618.6	618.6	618.6	618.6
615002	COAL CREEK G2	2	620	620	620	620	620	620
661055	LEWIS G1	1	56	50	55	50	55	
659194	ND PRAIRIE WND	1	115.5	100	100	100	100	100
659294	ECKLUND WIND 34.5	1	49.5	49.5	49.5	49.5	49.5	49.5
659294	ECKLUND WIND 34.5	2	49.5	49.5	49.5	49.5	49.5	49.5
600059	VELVA WIND GEN	W	12	12	12	12	12	12
661307	DIAMOND WILLOW GEN BUS	1	30	10.5	6	10.5	6	6
608603	OLIVER CO 1 WIND GEN	1	50.6	50.6	50.6	50.6	50.6	50.6
608606	OLIVER CO 2 WIND GEN	1	49.5	49.5	49.5	49.5	49.5	49.5
620168	RUGBY WND	1	150	100	100	100	100	100
620161	EDGLEY-OTP WIND GEN	1	21	4.2	4.2	21	4.2	21
659290	POMONA GEN	1	40.5	14	23.78	40.5	11.1	40.5
661999	TATONKA WIND GEN	W	180	63	36	63	139.65	63
657701	ASHTABULA GEN	1	99	81	18	99	21	99
657701	ASHTABULA GEN	2	49.5	90	0	49.5	23	49.5
657701	ASHTABULA GEN	3	48	9.6	9.6	31.2	20.6	48
657702	LUVERNE GEN	1	58.5	58.5	58.5	0	0	58.5
657702	LUVERNE GEN	2	49.5	32.3	44	32.5	10	49.5
657702	LUVERNE GEN	3	61.5	0	0	0	0	0
657703	LANGDON WIND 115	1	99	81	18		33	
657703	LANGDON WIND 115	2	40.5	8.1	8.1	26.3	8.1	40.5
657703	LANGDON WIND 115	3	19.5	3.9	3.9	12.7	3.9	13.3
657703	LANGDON WIND 115	4	40.5	32	7	40.5	9	40.5
652559	OAHE G1	1	98	98	98	98	98	98
652556	OAHE G23	2	98	98	98	98	98	98
652556	OAHE G23	3	98	98	98	98	98	98
652557	OAHE G45	4	98	98	98	98	98	98
652557	OAHE G45	5	98	98	98	98	98	98
652558	OAHE G67	6	97	97	97	97	97	97
652558	OAHE G67	7	97	97	97	97	97	97
652542	BIG BEND G12	1	59	59	59	59	59	59
652542	BIG BEND G12	2	59	59	59	59	59	59
652543	BIG BEND G34	3	59	59	59	59	59	59
652543	BIG BEND G34	4	59	59	59	59	59	59
652544	BIG BEND G56	5	59	59	59	59	59	59
652544	BIG BEND G56	6	59	59	59	59	59	59
652545	BIG BEND G78	7	59	59	59	59	59	59
652545	BIG BEND G78	8	58	59	59	59	59	59

Table 3.2 – Existing Generation levels

3.5.3 Prior Queued Projects

Previously queued generation was included in the models according to the listed in-service dates, their proximity to the project, and what stage the project was in.

The following Table 3.3 gives a list of projects that are currently in-service and are currently modeled in the cases. Generation levels were usually not changed if the wind farm or generation station was remote from the study area.

							2010			2020	
Bus	**GI#**	**QueueDate**	**Location**	**State**	**Type**	**Size**	**sp**	**wp**	**suop**	**sp**	**suop**
661999	G132	September 17, 2001	Ellendale	ND	Wind	180	36	63	63	140	63
659290	GI-0208	June 20, 2002	Ft. Thompson	SD	Wind	40	40.5	14	40.5	11.1	40.5
659291	GI-0209	June 20, 2002	Edgeley	ND	Wind	40	40.5	40.5	40.5	40.5	40.5
659274	GI-0316	August 4, 2003	Groton	SD	Gas	120	120	120	100	120	120
620138	G380	November 21, 2003	Rugby	ND	Wind	150	100	100	100	100	100
600059	G408	March 2, 2004	Velva	ND	Wind	12	12	12	12	12	12
659194	GI-0503	January 28, 2005	Minot	ND	Wind	100	100	100	100	100	100
608603	G502	March 14, 2005	Oliver County	ND	Wind	50.6	50.6	50.6	50.6	50.6	50.6
659294	GI-0508	April 18, 2005	Wilton	ND	Wind	49.5	49.5	49.5	49.5	49.5	49.5
662101	GI-0602	March 31, 2006	Wessington Springs	SD	Wind	100	100	100	100	100	100
659274	GI-0608	July 14, 2006	Groton	SD	Gas	120	120	120	100	120	120
608606	GS659	September 1, 2006	Oliver County	ND	Wind	49.5	49.5	49.5	49.5	49.5	49.5
657703	GM0100	September 11, 2006	Langdon	ND	Wind	100	37	125	79.5	54	94.3
659270	GI-0614a	September 14, 2006	Culbertson	ND	Gas	7.5	5.5	5.5	5.5	5.5	5.5
659294	GI-0615	October 18, 2006	Wilton	ND	Wind	49.5	49.5	49.5	49.5	49.5	49.5
657703	GM0200	November 13, 2006	Langdon	ND	Wind	60	-	-	-	-	-
661307	G767	March 20, 2007	Baker	MT	Wind	19.5	6	10.5	10.5	6	6
659270	GI-0708	May 9, 2007	Culbertson	ND	Gas	100	100	100	-	100	-
657703	GM00300	July 31, 2007	Langdon	ND	Wind	40.5	-	-	-	-	-
659194	GI-0720	September 1, 2009	Minot	ND	Wind	15.5	-	-	-	-	-
657701	GM00		Ashtabula	ND	Wind		27.6	186.6	175.7	64.6	196.5
657702	GM00		Luverne	ND	Wind		102.5	90.8	32	10	108

Table 3.3 – In-service projects included in the base case

In general all MISO projects that were in the SPA stage of studies were not included in this study because of the unknown transmission updates required for their interconnection. The MISO Group 5 projects or other projects near this have been included in the out year cases.

							2010			2020	
Bus	GI#	QueueDate	Location	State	Type	Size	sp	wp	suop	sp	suop
600099,600077	G176	March 4, 2002	Yankee	MN	Wind	100	20	40	100	100	100
99359	G359	March 27, 2004	Wishek	ND	Wind	150	-	-	-	153	153
615015	G645	May 26, 2006	Jamestown	ND	Coal	50	50	50	50	50	50
615011	G531	July 1, 2005	Staton	ND	Wind	68	-	-	-	68	68
99555	G555	October 24, 2005	Grant Co	MN	Wind	100	-	-	-	100	100
99586	G586	December 30, 2005	Yankee	MN	Wind	30	-	-	30	30	30
99618	G618	April 11, 2006	Toronto	SD	Wind	138	-	-	-	138	138
99621	G621	April 18, 2006	VLM River	MN	Wind	20	20	20	20	20	20
99634	G634	April 27, 2006	Brookings Co	MN	Wind	96	-	-	93.2	100	100
99635	G635	April 27, 2006	Toronto	SD	Wind	101	-	-	-	100	100
99636	G636	May 15, 2006	Benson	MN	Wind	18.9	-	-	-	18.9	18.9
99637	G637	May 16, 2006	Fairmont	MN	Wind	20	-	-	-	20	20
99638	G638	May 17, 2006	Morris	MN	Wind	20	-	-	-	20	20
615015	G788	April 24, 2007	Jamestown	ND	Coal	49	49	49	49	49	49

Table 3.4 – Projects added based on MISO recommendation to the base case and modeled at their full output.

The following table shows the request within the Western queue. The only request that was included was the GI-0619 request. GI-0108, 303, 616, 703, and 704 are remote from this interconnection request and were excluded on that basis.

							2010			2020	
							sp	wp	suop	sp	suop
Bus	GI#	QueueDate	Location	State	Type	Size	-	-	-	-	-
652198	GI-0108	07-Aug-01	White	SD	Wind	200	-	-	-	-	-
652196	GI-0303	10-Mar-03	White	SD	Wind	170	-	-	-	-	-
	GI-0515	11/1//2006	Eagle Butte	SD	Wind	130	-	-	-	-	-
660616	GI-0616	23-Oct-06	Leland Olds - Groton	ND	Wind	81	80.5	80.5	80.5	80.5	80.5
652619	GI-0619	19-Dec-06	Leland Olds - Groton	ND	Wind	150	-	-	-	-	-
652194	GI-0703	23-Feb-07	Summit	SD	Wind	200	-	-	-	-	-
660707	GI-0707a	13-Apr-07	Leland Olds - Groton	ND	Wind	286	-	-	-	-	-
	GI-0710	24-May-07	Ft. Thompson	SD	Wind	100	-	-	-	-	-
659296	GI-0713	11-Jun-07	Wessington Springs	SD	Wind	50	-	-	-	-	-
659296	GI-0714	11-Jun-07	Wessington Springs	SD	Wind	100	-	-	-	-	-
659366	GI-0715	02-Jul-07	Hilken	ND	Wind	100	-	-	-	-	-
659285	GI-0716	06-Jul-07	White	SD	Gas	60	-	-	-	-	-

Table 3.5 – Integrated System (IS) projects

3.5.4 Steady State Model Cases

Cases for the steady state thermal, voltage and distribution factor analysis are derived from the 2009 MRO Final cases. These cases were further refined by the Minnesota Transmission Assessment and Compliance Team (MNTACT). The five cases chosen for this study include both a near term and out year scenarios. The near term cases reflect 2010 loads and a pre-CAPX environment, while the 2020 cases reflect a post-CAPX environment. This area is not a typical winter peaking area so summer peak and off peak cases are the worst case scenario. The following table shows the base MNTACT cases along with a short description of each model chosen for this study.

	Models Formed form the MRO 2009 Series	Description of Model
Near Term	MRO-COL09-2010SU70-FINAL-MWEX	This is to model 2175 MW on MHEX and 1525 MW on MWEX
	MRO-COL09-2010-11W-FINAL	2010-2011 Winter Peak Load Scenario
	MRO-COL09-2010SUPK-FINAL	2010 Summer Peak Load Scenario
Out Year	MRO-COL09-2020SU70-FINAL-HW	This is to model 2000 MW of generation in SWMN and 700 MW in SEMN (Back dow n the base load generation after turning dow n peakers)
	MRO-COL09-2020SUPK-FINAL	2020Summer Peak Load Scenario

Table 3.6– Group Study base cases.

From these five original cases three cases were developed for each load scenario:

- "F00" - Base case project generation offline
- "HG1" – Project generation online – Sunk to BEPC generation
  - Spirit Mound – 100 MW's
- "HL1" – Project generation online – Sunk to BEPC load
  - Scale BEPC owned load (659) by 100 MW's

The case build process, case naming convention, and pfinfo files for all the cases can be found in Appendix A. The following were notable changes made to all the cases for this study:

- Increase Oahe and Big Bend to max power
- Set B10T to 120 MW's south
- Set MCDC west in the peak cases

Base Cases	NDEX	MHEX	MWEX	B10T	MCDC
f00-so10aa	2079	2174	1526	165	150 East
f00-sp10aa	669	1244	928	121	200 West
f00-wp10aa	354	666	772	50 North	200 West
f00-so20aa	2842	1179	1007	165	150 East
f00-sp20aa	883	1021	711	119	150 East

Table 3.7 - Base case values

3.5.5 Transient Stability Model Development

Cases used for dynamic stability analysis are taken again from the May 2010 version of the 2008 NMORWG study package. The off-peak summer high transfer case (urg-so10aa.sav) with North Dakota coalfield generation at URGE output was used as a starting point for this study.

The following changes were made to the urg-so10aa case to get to a 2011 time frame

- ND peak load updated from 3110 MW to 3366 MW
- Fixed GI-0602 (Wessington Springs) and set to 100 MW
- Added GI-0713, GI-0714, and GI-1003 (184 MW) set to 0 MW
- Added GI-0715 (100 MW)

This case includes the transient limited stability interfaces MHEX, NDEX, and MWEX set at their boundary limits of 2175, 2079, and 1525 respectfully.

The following process was used to evaluate the differences of each option:

- Document the transient stability performance of the existing system for the 2012 summer conditions at high simultaneous NDEX/MHEX/MWEX conditions of 2080/2175/1525 respectively.

- Document the stability performance of the resulting system with the generator online. Differences in power interfaces in the system were made to the generators east of the Twin cities.

Three cases were developed for a high transfer scenario with North Dakota coal field generation at Urge. The first case (fs0-so11aa) left the generator offline, and updated North Dakota summer peaking load to 3366 MW. This load estimate was obtained by taking the maximum seen this in summer of 2010 as roughly 3300 MW and adding a 2 percent increase for a 2011 timeframe. The second case (hs1-so11aa) turns GI-0715 on for a total increase of 100 MW at the Wessington 230 kV bus. The third case (hs3-so11aa) includes prior queued project GI-0713, GI-0714 and GI-1003 (184 MW) to the case. The Case descriptions are shown in Figure 3.8.

2010 Summer Off-Peak Load Cases	GI-0715	GI-0713	NDEX	MHEX	MWEX	Comments
fs0-so11aa.sav	0	0	2081	2175	1525	GI-0715 off
hs1-so11aa.sav	100	0	2080	2176	1524	GI-0715 online -- Dispatched via setexports.ipl (North dakota Load)
hs2-so11aa.sav	100	184	2081	2175	1525	GI-0715 online -- Dispatched via setexports.ipl (North dakota Load)

Figure 3.8 – 2011 High Transfer Steady State Models

3.6 Steady State Power flow Analysis Procedure

Steady state analysis was simulated in accordance with the MAPP DRS standards. Both single and multiple contingencies were run. To determine steady state results for each contingency, the contingency program developed by GRE was used as well as the standard PSSE tool ACCC. For the GRE contingency iplan, single and multiple contingencies were created by the iplan for all areas within the MAPP region. Any cases that did not solve using this type of analysis were solved manually.

3.7 Contingency Analysis

Contingency analyses included single branch and selected multi-element contingencies on facilities rated 110 kV and above. Single branches as well as multi-terminal outages in WAPA, GRE, MH, MP, OTP, and XEL control areas were considered. All facilities rated 70 kV and above were monitored in the WAPA, OTP, GRE, MP, XEL and MH control areas. Specific consideration was given to those facilities which fall under the study area of interest as seen in the following figure 3.9.

Contingencies were solved using GRE's contingency program. Phase shifters and transformer taps were enabled. Thermal violations were flagged based on 100% of facility ratings (Rate A in PSS/E). Post-contingency power flows in excess of 100% of Rate A were recorded.

If several contingencies overload a given transmission facility, only the worst ten contingencies are reported. Overloads on generator step up transformers are not reported.

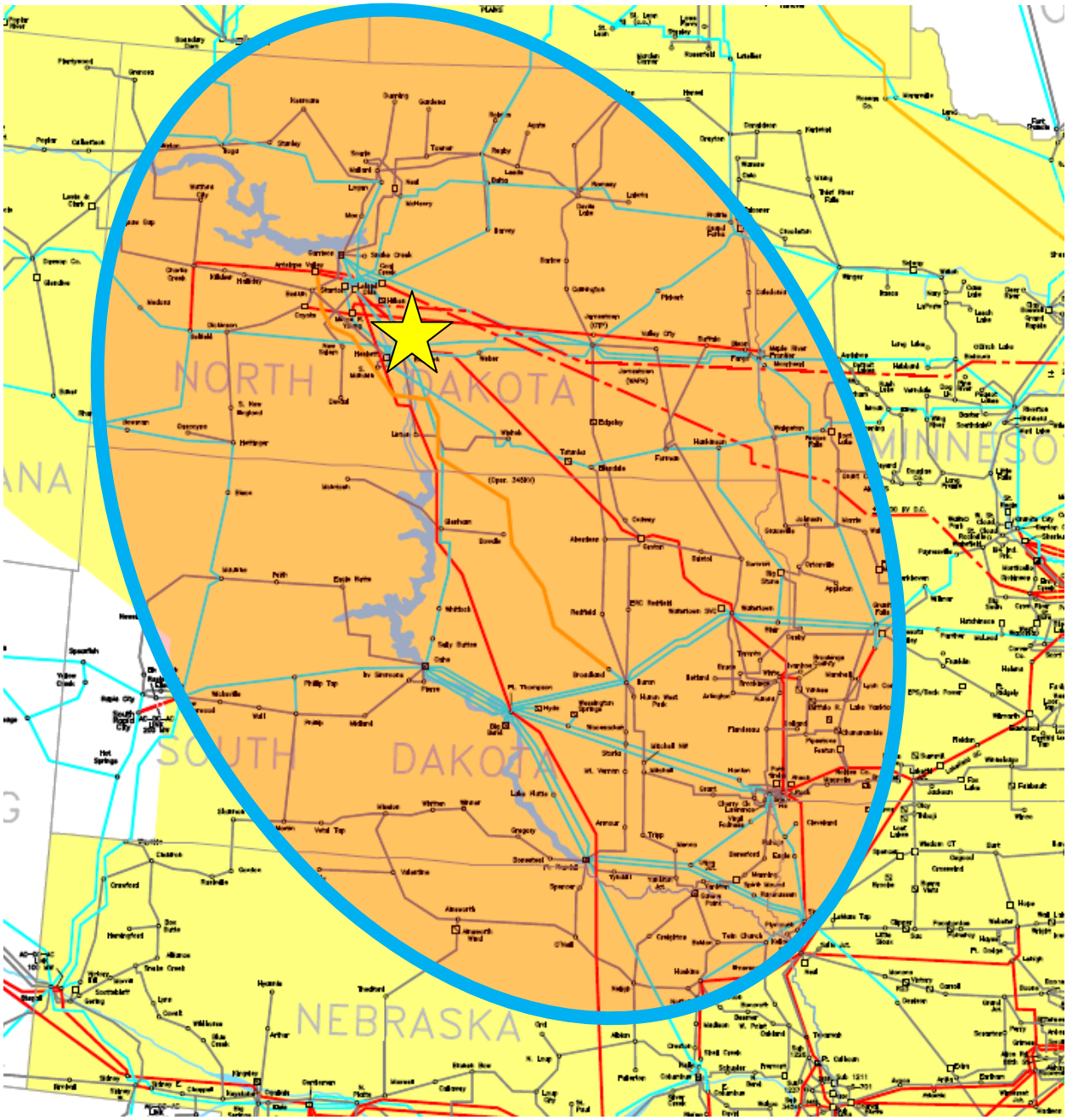

Figure 3.9 – Study Area of Interest

4.0 Steady State Analysis Results

The incremental impact of the GI-0715 wind farm on thermal loading and voltage profiles of transmission facilities under system intact and contingency conditions was evaluated by comparing transmission system power flows with and without the GI-0715 project.

4.1 Near Term Results

The following is a summary of the results for near term thermal and voltage analysis. These results are a compilation of both the peak load and off peak conditions. Results show that peak conditions yield a less strained condition, while the off peak conditions yield a higher flow in the area and generate more limiting conditions.

A complete listing of the near term voltage and loading tables can be seen in Appendix D.

4.1.1 Near Term - System Intact

One facility was significantly affected with system intact and near term conditions. This violation occurred during the off peak and high wind situations, while the peak conditions did show violations, they were not as severe as off peak. That facility is as follows:

Hilken – Bismarck 230 kV line: This line loaded above its 319 MVA rating as a result of dispatching the GI-0715 project. The line exceeds its continuous rating due to this project. The system intact overload will be mitigated by upgrading the terminal equipment of the line to achieve a line rating of 391 MVA in the summer. The following table shows the loading for all three load scenarios studied.

CIRCUIT/WINDING			TO			CKT	RATE A	RATE C	so10aa	sp10aa	w p10aa
#	NAME	#	NAME			#	MVA	MVA	MVA	MVA	MVA
652426	BISMARK4	230.0	652466	HILKEN 4	230.0	1	319	351	321	328	306

Table 4.1 – 2010 System Intact Loading

4.1.2 Near Term – Contingency Conditions

Table 4.2 below lists the significantly affected facility loadings for contingency conditions with and without the proposed project. This table shows the violated facilities and associated contingencies that cause overloads, along with a comparison of facility loadings expressed both in MVA and in percent on Rate A without and with the proposed projects. The following loadings are from 2010 cases.

CIRCUIT/WINDING			TO			CKT	RATE A	RATE C	so10aa	sp10aa	w p10aa	CONTINGENCY					
#	NAME	#	NAME			#	MVA	MVA	MVA	MVA	MVA	FROM			TO		CKT
652426	BISMARK4	230.0	652466	HILKEN 4	230.0	1	319	351	392	396	374	652441	GARRISN4	230.0	652444	JAMESTN4	230.0 1
652442	GARRISN7	115.0	661008	BEULAH 7	115.0	1	120	121	116.4	128	115.4	652426	BISMARK4	230.0	652466	HILKEN 4	230.0 1
652426	BISMARK4	230.0	652456	WASHBRN4	230.0	1	320.0	352		321.18		652426	BISMARK4	230.0	652466	HILKEN 4	230.0 1
652456	WASHBRN4	230.0	659106	LELANDO4	230.0	1	319.0	351		330.48		652426	BISMARK4	230.0	652466	HILKEN 4	230.0 1

Table 4.2 – GI-0715 Significantly Affected Facilities - 2010

Hilken – Bismarck 230 kV line: This line loaded above its 319 MVA rating as a result of dispatching the GI-0715 project during system intact conditions and continues to be overloaded during contingency conditions. The highest post-contingency loading was 396 MVA (post project). By upgrading the terminal equipment of the line, it can achieve a line rating of 391 MVA in the summer.

Bismarck – Washburn – Leland Olds 230 kV line: This line loaded above its 319 MVA rating as a result of dispatching the GI-0715 project during system intact conditions and continues to be overloaded during contingency conditions. The highest post-

contingency loading was 330 MVA (post project). The highest loading on this line was below the emergency limit of this line.

Garrison – Beulah 115 kV line: This line loaded above its 120 MVA rating during contingency conditions. The contingency is the loss of the Bismarck - Hilken 230 kV line. Post-contingency loadings are 118 MVA (pre-project) vs. 128 MVA (post project). The post contingent loading on this line is above the emergency rating of the line (121 MVA). This 115 kV line actually has two taps that fall on the line, the first is at Pick City where the limiting CT and relay is located. The rest of the line has an emergency rating of 132 MVA which would clear this violation.

No significant impacts were noted on bus voltages in the interconnection vicinity.

4.2 Out Year Results

The out year results did not indicate any new loading or voltage violation that was not addressed in the near term cases.

4.3 Thermal Sensitivities

Sensitivities were completed on cases which showed the worst loading. Sensitivities were run by backing some generation off of urge to see if an "operating limit" can be found.

4.3.1 Sensitivity A – BEPC/Garrison Generation at Cruise

Sensitivity was completed on the summer peak case by backing of the generation from urge levels to cruise levels at Leland Olds, Antelope Valley, and Garrison stations to cruise levels. Generation at the stations was reduced by 77.4 MW's total as seen in the following table.

BUS#	BUS NAME	Urge	Cruise
659103	ANTELOPE VALLEY G1	480	465
659107	ANTELOPE VALLEY G2	481.2	465
659110	LELAND OLDS G1	240	230
659111	LELAND OLDS G2	487.2	475
652457	GARRISON G1	102	96
652458	GARRISON G2	102	96
652459	GARRISON G3	102	96
652460	GARRISON G4	102	99
652461	GARRISON G5	102	99
	Reduction		**77.4**

Table 4.2 – Baseload Generation comparison

The loading on the Hilken – Bismarck 230 kV line and the Garrison – Beulah line were both reduced from the initial cases as seen in the following table 4.3.

CIRCUIT/WINDING			TO			CKT	Continuous	Emergency	Precase	Postcase	**Diff**	**DF**	CONTINGENCY			
#	NAME	#	NAME			#	Rating	Rating	MVA	MVA	**MVA**	**%**	FROM		TO	CKT
652426	BISMARK4	230.0	652466	HILKEN 4	230.0	1	319	351	303	387.26	84.26	84.26%	652441	GARRISN4 230.0	652444 JAMESTN4	230.0 1
652442	GARRISN7	115.0	661008	BEULAH 7	115.0	1	120	121	114.33	124.4	9.67	9.67%	652426	BISMARK4 230.0	652466 HILKEN 4	230.0 1

Table 4.3 – Summer Peak sensitivity loading – Generation at Cruise

It can be seen from the table above that operation of this wind farm can be accommodated with existing generation running at cruise levels with the Hilken – Bismarck line uprated to 391 MVA. The loading on the Garrison – Beulah 115 kV line is still above the emergency rating of 121 MVA, which can be mitigated by a CT and relay change at the Pick City tap on that line.

4.4 Prior Outages

There currently is a Special Protection Scheme (SPS) in place up at Garrison for prior outage of facilities leaving the station. The addition of this project will require a full restudy and possible extension of the SPS at this station. The SPS restudy is not part of this SIS and will be studied at a later time.

4.5 Constrained Interface Analysis

Constrained path analysis has been completed to assess the potential issues related to deliverability of the proposed generation. Analysis was completed using the 2010 and 2020 summer peak models that were used for steady state power flow analysis. Both generation and load re-dispatch were considered. The analysis was completed using the DRS established "dfcalc-otdf-6digit.ipl" distribution factor (DF) calculation program, which measures the flows on all constrained interface ties, with and without the new generation. The net differences between the two cases are then compared to determine the total impact on each constrained interface. The net change in power flow across the interface is then divided by the new generation amount. This quantity equals the distribution factor. A distribution factor above 5% (for PTDF type flowgates) or 3% (for OTDF type flowgates) constitutes an impact on a constrained interface.

For the generation-to-load scenario, BEPC load was scaled up by 100 MW's. For the generation-to-generation scenario, the generator was dispatched according to that which was identified in section 3.5.3 which was to BEPC generation.

The associated TSR request that has been made within the Integrated System Queue will yield a full delivery study and will capture any affected flowgates. The following will give some insight on any impacts that may be caused by this generator for the assumed delivery.

For the out year distribution factor analysis, several assumptions were made on flowgates that have changed due to transmission additions in the area. The following line sections and/or flowgates were impacted.

- Prairie Island – Byron - North Rochester now intersects the line
- Duane Arnold – Tiffin - Montezuma now intersects the line
- NDEX - CAPX facilities

	PTDF			
	Summer Peak 2010			
	Load Dispatch		Generation Dispatch	
Constrained Interface	(MW)	%	(MW)	%
WEMPAD__PTDF	-0.40	-0.38%	-0.60	-0.57%
EAUARP__PTDF	0.40	0.41%	1.00	0.96%
ZIOLKVZIOADN	-0.80	-0.78%	-1.00	-1.03%
WEMPLBROE	-0.30	-0.29%	-0.40	-0.43%
MTGSPC__PTDF	0.10	0.12%	0.60	0.62%
NAPRRN__PTDF	-1.00	-1.02%	-1.50	-1.47%
ZIOARC__PTDF	-0.30	-0.27%	-0.40	-0.36%
ZIOPLP__PTDF	-0.50	-0.46%	-0.60	-0.60%
WEMPADWEMROE	-0.70	-0.67%	-1.00	-1.00%
ARNHAZ__PTDF	-1.20	-1.18%	-1.50	-1.55%
RCKXFM__PTDF	0.00	0.04%	0.10	0.09%
QUARCK__PTDF	0.00	-0.02%	0.10	0.08%
PPRZIO__PTDF	0.50	0.46%	0.60	0.61%
NDEX	53.00	**52.98%**	90.20	**90.23%**
MHEX_S	0.70	0.71%	0.50	0.52%
MHEX_N	-0.50	-0.54%	-0.30	-0.29%
GGS	-9.60	-9.57%	2.70	2.68%
GENTLMREDWIL	-1.80	-1.79%	-0.80	-0.79%
GRIS_LNC	-5.40	-5.36%	5.30	**5.32%**
COOPER_S	-3.00	-2.95%	-6.10	-6.12%
PR_ISL_BYRON	2.70	2.71%	4.30	4.26%
FTCAL_S	0.10	0.12%	-5.00	-4.97%
TIFARN__PTDF	-0.80	-0.79%	-0.90	-0.90%
AHDSTL__PTDF	1.40	1.42%	1.80	1.76%
MWEX____PTDF	2.30	2.28%	3.40	3.40%

Figure 4.4.1 - 2010 PTDF Constrained Interface Analysis results

	OTDF			
	Summer Peak 2010			
	Load Dispatch		Generation Dispatch	
Constrained Interface	(MW)	%	(MW)	%
LEEBYRNELELC	-1.20	-1.24%	-2.20	-2.15%
CDVNELQUA471	-1.50	-1.55%	-2.70	-2.75%
QUDCOR471QUD	-0.40	-0.37%	-0.70	-0.70%
QUDCORNEL471	-0.40	-0.37%	-0.70	-0.70%
ADNZIOPLPZIO	0.50	0.50%	0.70	0.66%
EAUARPWMPPAD	0.40	0.40%	1.00	0.96%
PADXFMWEMROE	-0.10	-0.14%	-0.20	-0.20%
EAUARPPRIBYR	0.60	0.63%	1.30	1.34%
PADBLKPADTLR	-0.20	-0.17%	-0.30	-0.26%
BLKCORPADTLR	-0.10	-0.08%	-0.10	-0.12%
RSSROEWEMROE	-0.10	-0.06%	-0.10	-0.09%
RRNNPTRRNGPK	-0.10	-0.12%	-0.10	-0.14%
BLKCRDWEMROE	-0.10	-0.05%	-0.10	-0.08%
PADTLRPADBLK	-0.10	-0.10%	-0.10	-0.14%
ROE_T2ROE_T3	-0.10	-0.13%	-0.20	-0.20%
TCRWIEARPRRN	0.20	0.21%	0.10	0.13%
TCRWIEEARP_G	0.20	0.20%	0.30	0.27%
PADTLRWEMROE	-0.10	-0.08%	-0.10	-0.11%
WTAPEDWERRRN	-0.10	-0.13%	-0.20	-0.22%
MTGSPCCOFPAN	0.10	0.10%	0.60	0.60%
QUA471CDVNEL	-1.60	-1.55%	-2.80	-2.76%
QUACDVQUA471	-2.00	-2.02%	-3.60	-3.62%
WEMPADZIOPLP	-0.50	-0.45%	-0.70	-0.66%
WEMPADCHVSLA	-0.40	-0.43%	-0.70	-0.67%
ZIOPLPZIOARC	-0.70	-0.66%	-0.90	-0.86%
ZIOPLPWEMPAD	-0.50	-0.51%	-0.70	-0.68%
ZIOARCZIOPLP	-0.50	-0.49%	-0.60	-0.65%
CHESILNELELC	-0.50	-0.46%	-0.90	-0.89%
NELELCCHESIL	-0.70	-0.72%	-1.30	-1.35%
LCONELWEMPAD	0.90	0.87%	1.50	1.50%
ELNHNZNAPRRN	-0.40	-0.44%	-0.60	-0.64%
PLPARCPLRRAC	-0.30	-0.33%	-0.40	-0.45%
PLPARCZIOARC	-0.30	-0.31%	-0.40	-0.42%
PLPZIOCHESIL	0.40	0.42%	0.50	0.52%
PLPZIOZIOARC	0.70	0.66%	0.90	0.87%
PZIOPLPWR_AT	-0.50	-0.49%	-0.60	-0.65%
PLPRACPLPADN	-0.40	-0.38%	-0.50	-0.51%
RRNWESRRNGPK	-0.10	-0.13%	-0.10	-0.14%
RRNWESRRNGPK	-0.10	-0.13%	-0.10	-0.14%
ARNHAZWEMPAD	-1.20	-1.19%	-1.60	-1.57%
LORTRKWEMPAD	-0.30	-0.33%	-0.50	-0.50%
LKJFOXARNHAZ	-0.30	-0.29%	-0.60	-0.65%
QUARCKCORMOL	0.10	0.13%	0.30	0.33%
RCKXFMQUADAV	0.20	0.17%	0.30	0.31%
SALXFMQUAS91	0.00	0.02%	0.10	0.13%
SALXFMCORMOL	0.00	-0.01%	0.10	0.07%
SALXFMQUADAV	0.00	0.02%	0.10	0.13%
TIFARNHILMON	-0.10	-0.09%	0.30	0.28%
ARNVINARNHAZ	0.00	0.02%	0.20	0.18%
DAVCALQUARCK	-0.10	-0.07%	-0.10	-0.06%
LAKFOXLAKLKF	-0.80	-0.77%	-1.70	-1.70%
DYSWASARNHAZ	-0.50	-0.50%	-0.70	-0.67%
BONBJCSYCLEH	0.00	0.04%	0.10	0.14%
BONBJCLEHWBS	0.00	-0.02%	-0.10	-0.10%
LKJFOXLKJTRI	-0.20	-0.20%	-0.60	-0.55%
HAZDUNEAUARP	0.00	-0.03%	-0.10	-0.11%
SPETRILAKRAU	0.00	0.00%	0.00	0.00%
SALXFMWEMPAD	-0.10	-0.08%	0.00	-0.04%

	OTDF (contd)			
	Summer Peak 2010			
	Load Dispatch		Generation Dispatch	
	(MW)	%	(MW)	%
HILXFMTIFARN	-0.20	-0.20%	-0.20	-0.21%
8STKERWEMPAD	0.00	0.00%	0.00	0.00%
8STKERARNHAZ	0.00	0.00%	0.00	0.00%
LIMEMELEHWEB	0.60	0.62%	0.90	0.91%
LORTRKWPAD_G	-0.30	-0.33%	-0.50	-0.50%
VINDYSARNHAZ	0.00	0.02%	0.20	0.18%
LIMEMEADAHAZ	0.80	0.84%	1.30	1.28%
SALJCRWEMPAD	-0.10	-0.13%	-0.20	-0.15%
LKFFOXLKFWLM	-0.80	-0.77%	-1.70	-1.73%
ARNHAZMTZBON	-0.70	-0.71%	-0.70	-0.74%
SALXFMTIFARN	-0.20	-0.15%	-0.10	-0.12%
SALXFMHL3TIF	-0.10	-0.11%	-0.10	-0.07%
TIFARNMTZBON	-0.10	-0.12%	0.30	0.26%
EMELIMEMEFYD	-0.70	-0.68%	-1.10	-1.08%
HAZX21HAZX22	0.30	0.31%	0.50	0.52%
FOXRUTLKGWLM	-1.40	-1.45%	-3.00	-3.02%
RUTWBOLKFWLM	0.00	0.00%	0.00	0.00%
DUNHAZARNHAZ	-0.20	-0.19%	-0.20	-0.17%
PLPRACADNZIN	-0.40	-0.38%	-0.50	-0.50%
NAPFOXNAPKEW	0.50	0.48%	0.70	0.68%
NPTRKRGDRRKR	0.10	0.12%	0.10	0.14%
WIAHOVRKRWRW	0.10	0.12%	0.20	0.20%
WRWWRNWRWNA	0.50	0.50%	0.70	0.74%
SJHALKNAIASC	0.00	0.00%	0.00	0.00%
IASCLKNASJHA	0.00	0.00%	0.00	0.00%
GEACOEGEAMRL	-0.40	-0.36%	-0.50	-0.54%
BYRMLFBYRPVV	1.10	1.10%	1.70	1.69%
BYRMLFPVVADM	0.60	0.64%	1.00	0.97%
ALMWABPRISBY	-0.20	-0.18%	-0.30	-0.34%
ALMELKKGEUAR	-0.20	-0.15%	-0.10	-0.15%
SUBTEKFTCRAU	0.20	0.19%	2.50	2.53%
TEKRAUCOONEB	0.00	0.03%	0.70	0.74%
ADMXFMHAZADM	1.10	1.06%	1.70	1.69%
PLYSOURAUSOU	-0.20	-0.16%	5.20	**5.24%**
SONCOCCOCCCT	3.00	3.00%	2.60	2.63%
SONCCTCOCSON	-2.80	-2.83%	-2.50	-2.49%
WABROCPRISBY	0.70	0.75%	1.20	1.21%
READEMMTZBON	1.10	1.07%	1.80	1.83%
ARNHAZ__SRC3	-1.10	-1.14%	-1.70	-1.65%
QUAD91CORD39	1.60	1.55%	2.70	2.67%
CORS39QUAD91	1.40	1.42%	2.40	2.42%
92HILLOUHILL	1.80	1.82%	3.30	**3.31%**
GENLACGENCOU	-0.40	-0.43%	-0.60	-0.65%
ADARCRADAPVV	-1.10	-1.11%	-1.80	-1.80%
ADARCRBYRBYR	-0.40	-0.45%	-0.70	-0.70%
ADARCRBYRPVV	0.00	0.00%	0.00	0.00%
HAZBAHHAZWAS	0.50	0.55%	1.00	0.95%
LANGENHARGEN	-0.30	-0.29%	-0.50	-0.48%
BNDSYCGDMSEP	2.70	2.74%	4.80	**4.79%**
MNTBNDTIFARN	2.70	2.69%	4.80	**4.77%**
CBLRVBCOOJOE	-0.30	-0.30%	-0.70	-0.66%
ADABEAMCHHAZ	0.20	0.20%	0.20	0.19%
ROCWABJPMALM	-0.30	-0.28%	-0.40	-0.45%
ROCWABKNGARP	-0.20	-0.17%	-0.20	-0.18%
ADABVRGENOAG	0.00	-0.05%	-0.10	-0.14%
BVRHRMHAZMTC	0.10	0.08%	0.00	0.02%
BVRHRMBYRADM	-0.20	-0.19%	-0.40	-0.40%
HAZWASHAZBLA	0.50	0.51%	0.90	0.88%

Figure 4.4.2 - 2010 OTDF Constrained Interface Analysis results

	PTDF			
	Summer Peak 2020			
	Load Dispatch		Generation Dispatch	
Constrained Interface	(MW)	%	(MW)	%
WEMPAD__PTDF	-0.50	-0.45%	-0.80	-0.79%
EAUARP__PTDF	0.80	0.81%	1.60	1.61%
ZIOLKVZIOADN	-1.10	-1.06%	-1.80	-1.83%
WEMPLBROE	-0.30	-0.35%	-0.60	-0.60%
MTGSPC__PTDF	0.10	0.08%	0.30	0.29%
NAPRRN__PTDF	-1.30	-1.26%	-2.20	-2.17%
ZIOARC__PTDF	-0.40	-0.36%	-0.60	-0.62%
ZIOPLP__PTDF	-0.60	-0.63%	-1.10	-1.10%
WEMPADWEMROE	-0.80	-0.80%	-1.40	-1.39%
ARNHAZ__PTDF	-1.30	-1.27%	-2.30	-2.28%
RCKXFM__PTDF	0.00	0.04%	0.10	0.07%
QUARCK__PTDF	-0.10	-0.07%	-0.20	-0.17%
PPRZIO__PTDF	0.60	0.64%	1.10	1.10%
NDEX	52.50	**52.46%**	93.40	**93.43%**
MHEX_S	0.80	0.85%	0.50	0.53%
MHEX_N	-0.70	-0.67%	-0.40	-0.41%
GGS	-8.20	-8.16%	2.70	2.73%
GENTLMREDWIL	-1.70	-1.65%	-0.40	-0.39%
GRIS_LNC	-4.50	-4.45%	5.50	**5.51%**
COOPER_S	-2.90	-2.88%	-5.90	-5.93%
PR_ISL_BYRON	2.00	1.98%	3.80	3.81%
FTCAL_S	-0.20	-0.16%	-4.80	-4.78%
TIFARN__PTDF	-0.90	-0.85%	-1.50	-1.52%
AHDSTL__PTDF	1.40	1.37%	2.20	2.23%
MWEX____PTDF	2.40	2.43%	4.50	4.54%

Figure 4.4.3 - 2020 PTDF Constrained Interface Analysis results

	OTDF			
	Summer Peak 2020			
	Load Dispatch		Generation Dispatch	
Constrained Interface	(MW)	%	(MW)	%
LEEBYRNELELC	-1.30	-1.29%	-2.20	-2.17%
CDVNELQUA471	-1.60	-1.58%	-2.60	-2.63%
QUDCOR471QUD	-0.40	-0.36%	-0.60	-0.59%
QUDCORNEL471	-0.40	-0.36%	-0.60	-0.59%
ADNZIOPLPZIO	0.70	0.66%	1.10	1.13%
EAUARPWMPPAD	0.80	0.80%	1.60	1.61%
PADXFMWEMROE	-0.20	-0.16%	-0.30	-0.27%
EAUARPPRIBYR	0.90	0.86%	1.70	1.71%
PADBLKPADTLR	-0.20	-0.19%	-0.30	-0.32%
BLKCORPADTLR	-0.10	-0.09%	-0.20	-0.16%
RSSROEWEMROE	-0.10	-0.07%	-0.10	-0.13%
RRNNPTRRNGPK	0.00	0.00%	0.00	0.00%
BLKCRDWEMROE	-0.10	-0.06%	-0.10	-0.10%
PADTLRPADBLK	-0.10	-0.11%	-0.20	-0.19%
ROE_T2ROE_T3	-0.10	-0.12%	-0.20	-0.21%
TCRWIEARPRRN	0.10	0.13%	0.20	0.22%
TCRWIEEARP_G	0.20	0.20%	0.40	0.39%
PADTLRWEMROE	-0.10	-0.09%	-0.20	-0.16%
WTAPEDWERRRN	-0.20	-0.19%	-0.30	-0.32%
MTGSPCCOFPAN	0.10	0.06%	0.30	0.25%
QUA471CDVNEL	-1.60	-1.59%	-2.60	-2.64%
QUACDVQUA471	-2.10	-2.05%	-3.40	-3.41%
WEMPADZIOPLP	-0.50	-0.55%	-0.90	-0.95%
WEMPADCHVSLA	-0.50	-0.50%	-0.90	-0.86%
ZIOPLPZIOARC	-0.90	-0.89%	-1.50	-1.54%
ZIOPLPWEMPAD	-0.70	-0.70%	-1.20	-1.23%
ZIOARCZIOPLP	-0.60	-0.64%	-1.10	-1.10%
CHESILNELELC	-0.40	-0.41%	-0.70	-0.66%
NELELCCHESIL	-0.70	-0.70%	-1.10	-1.14%
LCONELWEMPAD	0.90	0.93%	1.60	1.58%
ELNHNZNAPRRN	-0.60	-0.56%	-1.00	-0.95%
PLPARCPLRRAC	-0.50	-0.45%	-0.80	-0.78%
PLPARCZIOARC	-0.40	-0.42%	-0.70	-0.72%
PLPZIOCHESIL	0.60	0.60%	1.00	1.04%
PLPZIOZIOARC	0.90	0.90%	1.50	1.55%
PZIOPLPWR_AT	-0.70	-0.67%	-1.20	-1.17%
PLPRACPLPADN	-0.50	-0.52%	-0.90	-0.91%
RRNWESRRNGPK	-0.10	-0.11%	-0.20	-0.16%
RRNWESRRNGPK	-0.10	-0.11%	-0.20	-0.16%
ARNHAZWEMPAD	-1.30	-1.28%	-2.30	-2.30%
LORTRKWEMPAD	-0.40	-0.37%	-0.60	-0.65%
LKJFOXARNHAZ	-0.30	-0.33%	-0.70	-0.72%
QUARCKCORMOL	0.10	0.12%	0.20	0.15%
RCKXFMQUADAV	0.20	0.16%	0.30	0.28%
SALXFMQUAS91	0.00	-0.02%	0.00	-0.04%
SALXFMCORMOL	0.00	-0.04%	-0.10	-0.06%
SALXFMQUADAV	0.00	-0.02%	0.00	-0.04%
TIFARNHILMON	-0.10	-0.10%	-0.20	-0.20%
ARNVINARNHAZ	0.10	0.07%	0.10	0.13%
DAVCALQUARCK	-0.10	-0.09%	-0.20	-0.16%
LAKFOXLAKLKF	-0.80	-0.76%	-1.70	-1.68%
DYSWASARNHAZ	-0.50	-0.48%	-0.80	-0.85%
BONBJCSYCLEH	0.00	0.01%	0.00	0.05%
BONBJCLEHWBS	0.00	0.00%	-0.20	-0.20%
LKJFOXLKJTRI	-0.20	-0.25%	-0.60	-0.62%
HAZDUNEAUARP	0.00	-0.03%	0.00	-0.05%
SPETRILAKRAU	0.00	0.00%	0.00	0.00%
SALXFMWEMPAD	-0.10	-0.06%	-0.10	-0.11%

	OTDF (contd)			
	Summer Peak 2020			
	Load Dispatch		Generation Dispatch	
	(MW)	%	(MW)	%
HILXFMTIFARN	-0.10	-0.07%	-0.10	-0.12%
8STKERWEMPAD	0.00	0.00%	0.00	0.00%
8STKERARNHAZ	0.00	0.00%	0.00	0.00%
LIMEMELEHWEB	0.70	0.69%	1.10	1.09%
LORTRKWPAD_G	-0.40	-0.37%	-0.60	-0.65%
VINDYSARNHAZ	0.10	0.07%	0.10	0.13%
LIMEMEADAHAZ	0.80	0.85%	1.50	1.51%
SALJCRWEMPAD	-0.20	-0.16%	-0.30	-0.28%
LKFFOXLKFWLM	-0.80	-0.76%	-1.80	-1.77%
ARNHAZMTZBON	-0.80	-0.84%	-1.50	-1.52%
SALXFMTIFARN	-0.10	-0.06%	-0.10	-0.10%
SALXFMHL3TIF	-0.10	-0.06%	-0.10	-0.10%
TIFARNMTZBON	0.00	0.00%	0.00	0.00%
EMELIMEMEFYD	-0.70	-0.71%	-1.30	-1.26%
HAZX21HAZX22	0.40	0.39%	0.70	0.72%
FOXRUTLKGWLM	-1.40	-1.45%	-3.20	-3.19%
RUTWBOLKFWLM	0.00	0.00%	0.00	0.00%
DUNHAZARNHAZ	-0.10	-0.10%	-0.20	-0.18%
PLPRACADNZIN	-0.50	-0.51%	-0.90	-0.88%
NAPFOXNAPKEW	0.60	0.60%	1.00	1.05%
NPTRKRGDRRKR	0.00	0.00%	0.00	0.00%
WIAHOVRKRWRW	0.20	0.17%	0.30	0.29%
WRWWRNWRWNA	0.60	0.62%	1.10	1.09%
SJHALKNAIASC	0.00	0.00%	0.00	0.00%
IASCLKNASJHA	0.00	0.00%	0.00	0.00%
GEACOEGEAMRL	-0.50	-0.46%	-0.80	-0.84%
BYRMLFBYRPVV	0.20	0.20%	0.40	0.40%
BYRMLFPVVADM	0.10	0.12%	0.20	0.24%
ALMWABPRISBY	-0.40	-0.37%	-0.60	-0.61%
ALMELKKGEUAR	0.00	0.00%	0.00	0.00%
SUBTEKFTCRAU	0.30	0.30%	2.60	2.61%
TEKRAUCOONEB	0.10	0.09%	0.50	0.53%
ADMXFMHAZADM	1.00	0.97%	1.80	1.84%
PLYSOURAUSOU	0.30	0.28%	5.00	**5.00%**
SONCOCCOCCCT	2.20	2.19%	1.90	1.90%
SONCCTCOCSON	-2.10	-2.06%	-1.80	-1.81%
WABROCPRISBY	0.40	0.40%	0.70	0.66%
READEMMTZBON	1.10	1.08%	1.90	1.90%
ARNHAZ__SRC3	-1.30	-1.27%	-2.50	-2.53%
QUAD91CORD39	1.60	1.60%	2.70	2.72%
CORS39QUAD91	1.40	1.44%	2.50	2.45%
92HILLOUHILL	1.90	1.86%	3.20	**3.22%**
GENLACGENCOU	-0.50	-0.52%	-0.90	-0.95%
ADARCRADAPVV	-0.80	-0.83%	-1.60	-1.57%
ADARCRBYRBYR	-0.50	-0.50%	-0.90	-0.93%
ADARCRBYRPVV	0.00	0.00%	0.00	0.00%
HAZBAHHAZWAS	0.60	0.60%	1.10	1.08%
LANGENHARGEN	-0.30	-0.33%	-0.60	-0.59%
BNDSYCGDMSEP	2.80	2.83%	5.10	**5.06%**
MNTBNDTIFARN	2.80	2.80%	5.00	**4.99%**
CBLRVBCOOJOE	-0.30	-0.29%	-0.60	-0.63%
ADABEAMCHHAZ	0.10	0.14%	0.20	0.24%
ROCWABJPMALM	-0.30	-0.31%	-0.50	-0.46%
ROCWABKNGARP	-0.30	-0.25%	-0.40	-0.36%
ADABVRGENOAG	-0.10	-0.06%	-0.10	-0.10%
BVRHRMHAZMTC	0.00	0.03%	0.00	0.05%
BVRHRMBYRADM	-0.10	-0.14%	-0.30	-0.27%
HAZWASHAZBLA	0.60	0.56%	1.00	1.01%

Figure 4.4.4 - 2020 OTDF Constrained Interface Analysis results

4.6 Steady State Conclusions

Steady state analysis of the GI-0715 project was completed by doing thermal, voltage, and constrained interface analysis. The results of the steady-state analysis indicate that the addition of proposed GI-0715 wind farm would adversely impact transmission system performance, both under system intact and contingency conditions. Although several transmission facilities were significantly impacted, particular attention was given to facilities in the vicinity of Hilken 230 kV substation and at both ends of the 230 kV line including Garrison and Bismarck. The following transmission reinforcements are recommended for mitigating the impacted transmission facilities listed in this report:

1. Upgrade the existing Hilken – Bismarck 230 kV line to allow a post- contingency loading of at least 391 MVA for near term and out year conditions
2. Mitigate the loading on the Garrison – Beulah 115 kV line by changing the CT and relay at the Pick City 115 kV tap.

5.0 Stability Analysis

The purpose of the stability analysis is to determine whether the MAPP system would meet stability criteria following commissioning of the proposed GI-0713 wind farm. To that end, faults were simulated in Northern MAPP to assess the impact of the proposed project on transmission system stability.

5.1 Computer Programs and Input Files

The NMORWG pkg2010-1-05-2010 was the starting point for this study. All simulations were created using PSS/e Rev 29.4.

5.2 Model Development

The cases used for the stability analysis were the "fs0 and fs1" cases as discussed in section 3.5.3 Summer Off-peak High Transfer Model Development. The dynamics models used for this generator analysis were the GE type doubly fed induction machine wind models. The information can be seen in Appendix A.3.

5.3 Disturbance Definitions

The disturbances used to test the northern MAPP region included the ag1, ei2, and nmz disturbance files as well as the rest of the standard NMORWG disturbance files. These faults are defined as follows:

- **ag1** – Single line to ground fault on the Leland Olds to Fort Thompson 345 kV line with Leland Olds breaker stuck
- **ei2** – Permanent bipole fault on the Coal Creek DC line
- **nmz** – Three phase fault at Chisago, trip F601C, Cross trip D602F

The fault files were used to check the transient response of the system with and without GI-0713 online.

In addition to the standard faults within the NMORWG package, additional local faults were studied as shown in **Table 5.1.**

Fault Name	Faulted Bus	Fault Type	Clearing Time (cycles)	Initial Clearing	Backup Clearing (cycles)	Backup Clearing
al1	Leland olds 230 kV	SLGBF	5	Leland olds - Stanton 230 kV	14	Leland olds 230 bus
am1	Leland olds 230 kV	SLGBF	5	Leland olds - Washburn 230 kV	14	Leland olds 230 bus
am3	Leland olds 230 kV	3-phase	5	Leland olds - Washburn 230 kV		
am4	Leland olds 230 kV	SLGBF	5	Leland olds - Washburn 230 kV	14	Leland olds 230 bus
an1	Leland olds 230 kV	SLGBF	5	Leland olds - Garrison 230 kV	14	Leland olds 230 bus
as3	Hilken 230 kV	3-phase	5	Hilken - Bismarck 230 kV		
aw3	Garrison 230 kV	3-phase	5	Garrison - Hilken 230 kV		
bi1	Leland olds 230 kV	SLGBF	5	Leland olds 230 - Leland olds 345	14	Leland olds 230 bus
bj1	Leland olds 230 kV	SLGBF	5	Leland olds 230 - Leland olds 345	14	Leland olds 230 bus
bq3	Watertown 345 kV	3-phase	4	Watertown - Groton 345 kV		
bs3	Bismarck 230 kV	3-phase	5	Bismarck - Hilken 230 kv		
ci1	Leland olds 345 kV	SLGBF	4	Leland olds 345 - Leland olds 230	14	Leland olds 230 bus
cj1	Leland olds 345 kV	SLGBF	4	Leland olds 345 - Leland olds 230	14	Leland olds 230 bus
cm1	Leland olds 230 kv	SLGBF	5	Washburn - bismarck 230 kV	15	washburn - bismarck and bismarck west bus
yi3	Ecklund 230 kV	3-phase	5	Ecklund - Hilken 230 kV		
yj3	Baldwin 230 kV	3-phase	5	Baldwin - Ecklund 230 kV		
yk3	Ecklund 230 kV	3-phase	5	Ecklund - Baldwin 230 kV		

Table 5.1 – Area faults

5.4 Performance Criteria

The study criteria and the methodology and procedures as documented in the *"MAPP Operating Study Manual"* are followed in this study.

5.5 Stability Results

The following section lists the results from the regional and local area stability results. For all tables and other stability information please see Appendix C. The cases used for the stability analysis were the "fs0 , hs1 and hs2" cases which are described in section 3.5.4 under model development. The corresponding stability summary tables for the stability analysis can be found in Appendix C as well.

5.5.1 Regional Stability Results

Three critical buses that have been noted with low voltages in the past are compared. The following Table 5.2 shows that the addition of the generator does not degrade any of the transient voltages at these buses nor other stations below criteria for the regional faults. Regional faults were simulated and all faults met criteria and were well damped. A complete listing of faults that were simulated can be found in Appendix C.1.

	Groton 345 kV (PU) Transient Voltage Minimum			Wahpeton 115 kV (PU) Transient Voltage Minimum			Watertown 345 kV (PU) Transient Voltage Minimum		
	Disturbance			Disturbance			Disturbance		
	ag1	ei2	nmz	ag1	ei2	nmz	ag1	ei2	nmz
fs0-so11aa Base Case	0.84	0.81	0.84	0.93	0.83	0.85	0.93	0.87	0.89
hs1-so11aa GI-0715	0.85	0.81	0.84	0.94	0.84	0.86	0.93	0.87	0.89
hs2-so11aa GI-0715	0.85	0.80	0.83	0.94	0.83	0.85	0.93	0.86	0.88

Figure 5.2 - Transient Voltages at Critical Buses in MAPP Region

5.5.2 Local Stability Results

Local stability analysis included faults at the Baldwin, Ecklund, and Hilken 230 kV buses. All faults met criteria and were well damped. The local area faults can be found in **Table 5.1**.

5.6 Prior Outage Stability Analysis

Prior outage analysis was done for Center – Jamestown 345 kV line, and for the Leland Olds – Ft. Thompson 345 kV line.

5.6.1 Prior Outage of Center – Jamestown 345 kV (eb)

Stability Analysis for the prior outage eb (Center – Jamestown 345 kV) showed low transient voltage for fault **"ed3"** for both "fs0-so11ag" and "hs1-s011ag".

ed3 – The ed3 (5 cycle 3-phase fault on Stanton – Square Butte 230 kV line) fault begins to show low transient voltage at the Ellendale 230 kV and G132 POI bus starting with the base case (before the addition of the project), and is therefore not a dynamic stability issue related to the addition of the project generators GI-0715.

	Groton 345 kV (PU) Transient Voltage Minimum			Wahpeton 115 kV (PU) Transient Voltage Minimum			Watertown 345 kV (PU) Transient Voltage Minimum		
	Disturbance			Disturbance			Disturbance		
	aq3	ei2	nmz	aq3	ei2	nmz	aq3	ei2	nmz
fs0-so11ag Base Case	1.00	0.76	0.80	0.99	0.81	0.84	1.02	0.85	0.88
hs1-so11ag GI-0715	1.00	0.75	0.80	0.99	0.80	0.84	1.02	0.84	0.88
Delta Impact	0.00	-0.01	0.00	0.00	-0.01	0.00	0.00	-0.01	0.00

5.6.2 Prior Outage of Leland Olds – Ft. Thompson 345 kV (ag)

Stability Analysis for the prior outage ag (Leland Olds – Ft. Thompson 345 kV) did not show any dynamic stability impacts from the addition of the generator.

	Groton 345 kV (PU) Transient Voltage Minimum			Wahpeton 115 kV (PU) Transient Voltage Minimum			Watertown 345 kV (PU) Transient Voltage Minimum		
	Disturbance			Disturbance			Disturbance		
	ag1	ei2	nmz	ag1	ei2	nmz	ag1	ei2	nmz
fs0-so11eb Base Case	0.81	0.75	0.81	0.93	0.83	0.86	0.91	0.84	0.88
hs1-so11eb GI-0715	0.82	0.74	0.81	0.94	0.82	0.86	0.92	0.83	0.88
Delta Impact	0.01	-0.01	0.00	0.01	-0.01	0.00	0.01	-0.01	0.00

5.7 Stability Conclusions

In conclusion several different stability models were developed and numerous regional and local faults were simulated to determine the impacts caused by the addition of GI-0715 (100 MW) at the Baldwin 230 kV bus would have on the dynamic stability of the regional and local transmission system. For system intact conditions no stability violations were observed regionally or locally.

The prior outages of the Leland Olds- Ft. Thompson 345 kV line and the Center – Jamestown 345 kV line performed well and the addition of the generator did not deteriorate the dynamic response of the bulk electric system below criteria.

6.0 Short Circuit Analysis

The purpose of the short circuit analysis is to determine the impact of the proposed project on station equipment in the region. Breakers are analyzed to see if there is enough breaking capability after the addition of the project. The PSSE tool "ASCC" was used for this purpose. A full short circuit calculation would need to be completed utilizing Western's Apsen model which may have newer information at the time of construction.

6.1 Base Case Development

The pre-project model used for this analysis was the short-circuit case "*08sc-102208.sav*" included in the 2010 NMORWG Study Package.

Starting from this case, a post-project case was developed by adding the proposed GI-0715 project and associated upgrades described in section 3. Suitable assumptions were made for the sequence data required for these additions.

6.2 Short-Circuit Calculations

Short-circuit calculations were performed to determine the impact of the proposed project on substation fault current levels. Three-phase and single-line-to-ground (SLG) symmetrical fault current levels were calculated at all study area buses rated 69 kV and above, both without and with the proposed project and the proposed network upgrades. In order to calculate fault current levels, classical fault assumptions were used with a pre-fault voltage of 1.0 p.u.

Figure 6.1 lists the three-phase and SLG fault current levels at the substations in the vicinity of GI-0715. The highest of these fault currents was compared against the lowest rated circuit breaker at each of these substations to determine whether or not the circuit breaker may be overstressed. Lowest breaker ratings were not available for all of the area substations.

The comparison showed that the calculated fault current levels increased yet did not exceed the lowest breaker rating substations analyzed. The calculated fault currents should be compared against the corresponding lowest breaker ratings when this information becomes available in order to determine whether existing breakers at these substations could become overstressed and whether mitigation may be required.

BUS		MIN. BREAKER	WITHOUT GI-0715 (1)		WITH GI-0715 (2)		CHANGE (2)-(1)	
NO.	NAME	RATING	FAULT CURRENT (AMP)		FAULT CURRENT (AMP)		AMP	
		AMP	3-PH	SLG	3-PH	SLG	3-PH	SLG
67285	BALDWIN4 230		5741.8	3401.7	6821.1	3626.4	1079.3	224.7
67284	ECKLUND4 230		6736.1	3879.8	7787.4	4089.3	1051.3	209.5
67283	HILKEN 4 230		7690	4416.4	8669	4612.7	979	196.3
66426	BISMARK4 230		12307.6	9170.3	12786	9339.5	478.4	169.2
67296	WARD 4 230		11585.1	8761.9	11873.3	8867.5	288.2	105.6
67342	HESKETT4 230		12080.9	9510.1	12310.7	9601.4	229.8	91.3
66441	GARRISN4 230		10329.9	11472.3	10536	11624.3	206.1	152
67216	AVSDC5TY 345		32538.6	2909.2	32709.1	2910	170.5	0.8
67106	LELANDO4 230		19450	20699.4	19581.2	20791.7	131.2	92.3
66427	BISMARK7 115		10459.6	8794.5	10567.2	8843.5	107.6	49
67329	ESTBMRK7 115		10459.6	8794.5	10567.2	8843.5	107.6	49
67343	HESKETT7 115		11954.5	11762.1	12052.3	11822.9	97.8	60.8
67330	STEIN 7 115		10025.6	7843.7	10122.4	7881.9	96.8	38.2
67331	CENTRTP7 115		9682.9	7283	9771.3	7315.3	88.4	32.3
67115	CENTURY7 115		9416.3	7074.7	9498.2	7104.5	81.9	29.8
67306	BISM DT7 115		9251.2	6648.3	9331.2	6674.9	80	26.6
66751	CENTER 4 230		16639.5	16929.6	16716.9	16980.7	77.4	51.1
67307	BISM NW7 115		9145.9	6852.9	9220.7	6880	74.8	27.1
66797	CENTERY3 345		14410.1	15792.9	14484.3	15849.8	74.2	56.9
66756	SQBUTTE4 230		17827.9	19084.7	17901.4	19138.4	73.5	53.7
66456	WASHBRN4 230		9387.8	7773	9460.1	7804.4	72.3	31.4
67367	MANDANW7 115		9222.4	7161.3	9286.7	7186.2	64.3	24.9
67365	MANDANS7 115		8504.2	6152.7	8563.8	6172.8	59.6	20.1
67105	LELANDO3 345		14238.7	15209	14294.3	15248.4	55.6	39.4
67202	LELND2TY 345		13419.2	14277.2	13472.9	14315.1	53.7	37.9
67201	LELND1TY 345		13445.6	14296.8	13496.6	14332.7	51	35.9
61601	CENTRDC4 230		15440.8	16634.8	15489.6	16671	48.8	36.2
66444	JAMESTN4 230		7105.7	6374.3	7152.9	6398.5	47.2	24.2
66442	GARRISN7 115		10917.2	12645.4	10961.9	12679.8	44.7	34.4
67328	WEBER 4 230		4590.2	3292.3	4633.7	3306.7	43.5	14.4
63049	STANTON4 230		17980.9	17630.2	18013.6	17649.7	32.7	19.5
67101	ANTELOP3 345		13890.6	16409.7	13920.8	16436	30.2	26.3
66445	JAMESTN7 115		8576.1	9087.7	8604.1	9107.8	28	20.1
67297	WARD 7 115		4473.7	0	4494.7	0	21	0
66207	JAMEST1T 230		5440.7	5319.4	5461.6	5332.1	20.9	12.7
63041	COAL CR4 230		18882.4	23448.4	18902	23467.1	19.6	18.7
63042	COAL TP4 230		15847.7	15178.4	15865.7	15188.6	18	10.2
66435	FARGO 4 230		7247.9	7530.1	7263.6	7540.8	15.7	10.7
67308	BEULAH 7 115		8983.8	7111.8	8999.5	7117.8	15.7	6
60133	SHEYNNE4 230		7479.9	7937.4	7494.9	7948.1	15	10.7
66754	MAPLE R4 230		7548.7	8869.1	7562.6	8881.2	13.9	12.1
67318	COYOTE 7 115		9472.3	8846.5	9486.1	8853.9	13.8	7.4
63381	UNDERWD4 230		14685.3	14581.7	14697.5	14589.1	12.2	7.4
66791	CENTER 3 345		6817.6	6713.1	6829.7	6720.4	12.1	7.3
60134	SHEYNNE7 115		9000.2	9161.5	9010.9	9168.6	10.7	7.1
66436	FARGO 7 115		8450.2	10010.6	8460.6	10019.8	10.4	9.2

Figure 6.1- GI-0715 Short Circuit comparison

7.0 Conclusion

The study results show that the addition of a 100 MW wind farm, request GI-0715, to be fed into the bulk electric system through the Ecklund 230 kV substation does not degrade the reliability of the MAPP system.

The following is a summary of study results:

Steady-State Analysis:
The interconnection of the proposed generator does impact some of the interconnecting transmission facilities. The steady-state criteria violations flagged were based on the modeled delivery of the generator's output of 100 MW sunk to load or to other generation.

The analysis was performed for both near-term cases (2010 timeframe) and out-year cases (2020 timeframe) for both peak and off peak scenarios. The following conclusions are drawn:

- One system intact violation was introduced by this project.

CIRCUIT/WINDING			TO			CKT	RATE A	RATE C	so10aa	sp10aa	w p10aa
#	NAME		#	NAME		#	MVA	MVA	MVA	MVA	MVA
652426	BISMARK4	230.0	652466	HILKEN 4	230.0	1	319	351	321	328	306

- Post-contingency overloads were observed on the following:

CIRCUIT/WINDING			TO			CKT	RATE A	RATE C	so10aa	sp10aa	w p10aa	CONTINGENCY					
#	NAME		#	NAME		#	MVA	MVA	MVA	MVA	MVA	FROM		TO			CKT
652426	BISMARK4	230.0	652466	HILKEN 4	230.0	1	319	351	392	396	374	652441	GARRISN4	230.0	652444	JAMESTN4	230.0 1
652442	GARRISN7	115.0	661008	BEULAH 7	115.0	1	120	121	116.4	128	115.4	652426	BISMARK4	230.0	652466	HILKEN 4	230.0 1
652426	BISMARK4	230.0	652456	WASHBRN4	230.0	1	320.0	352		321.18		652426	BISMARK4	230.0	652466	HILKEN 4	230.0 1
652456	WASHBRN4	230.0	659106	LELANDO4	230.0	1	319.0	351		330.48		652426	BISMARK4	230.0	652466	HILKEN 4	230.0 1

Hilken – Bismarck 230 kV (Rate A/Rate B/ Rate C – 319/398/351 MVA): This transmission line, which is one of the two outlets for GI-0715 indicated a maximum loading of 396 MVA during N-1 conditions (2010 summer peak load conditions; outage of the Garrison – Jamestown 230 kV) which translates into 121% on 319 MVA rating (Rate-A in PSS/E). The maximum pre-project loading was 312 MVA. This 230 kV line from Hilken to Bismarck will need to be uprated in order to mitigate the higher loading during system intact and contingency situations. An uprate to 391 MVA can be achieved through CT tap ratio changes and other terminal fixes at Bismarck and Hilken.

It was demonstrated through a sensitivity analyses that when backing down the Leland Olds, AVS, and Garrison stations to their cruise levels with the addition of this project, that the loading on the Hilken – Bismarck 230 kV line fell to 387 MVA. This is less than the 391 capable rating on the Bismarck – Hilken 230 kV line.

Bismarck – Washburn – Leland Olds 230 kV (Rate A/Rate B/ Rate C – 319/398/351 MVA): This second circuit of the Garrison – Bismarck 230 kV lines indicated a maximum loading of 330 MVA during N-1 conditions (2010 summer peak load conditions; outage of the Hilken – Bismarck 230 kV) which translates into 103% on 319 MVA rating (Rate-A in PSS/E). The maximum pre-project loading was 321 MVA. The loading on this 230 kV line is below its emergency ratings.

Garrison – Beulah 115 kV (Rate A/Rate B/ Rate C – 120/128/121 MVA): This 115 kV transmission line out of Garrison indicated a maximum loading of 128 MVA for outage conditions (2010 summer peak load conditions; outage of the Hilken – Bismarck 230 kV)

which translates into 106.6% on 120 MVA rating (Rate-A in PSS/E). The maximum pre-project loading was 118.5 MVA. This 115 kV line from Garrison to Beulah has an emergency rating of 121 MVA. An uprate to 132 MVA can be achieved through CT tap ratio changes and a relay fix at the Pick City tap located on the Garrison – Beulah 115 kV line.

The outyear cases did not show any additional loading or voltage violations.

Prior outages were not studied in full detail as there is a Special Protection Scheme (SPS) in place up at Garrison for prior outage conditions. The addition of this project will require a full restudy of that scheme which may require an extension of the SPS's reach to mitigate the additional loading from the project.

Short-Circuit Analysis:
The addition of the proposed GI-0715 project increases fault currents in the study area. Initial analysis of breakers showed that all breakers were below their interrupting limit. All breaker ratings were not available for the impacted substations. When this information does become available, the calculated fault currents should be compared against the breaker ratings in order to determine whether existing breakers at these substations could become overstressed and whether breaker replacements may be required.

Stability Analysis:
The addition of the generator did not show any stability violations. Sensitivities were completed to determine the affect prior queued projects may have on the stability of the system.

Constrained Interface Analysis:
The study also evaluated the impact of the proposed project on constrained interfaces in the MAPP/MISO system. These results are for delivery purposes and to identify potential third party flow gate issues for an assumed delivery component of the transmission system. Results indicate that the proposed project may adversely impact some interfaces based on the assumed delivery of the generator.

Injection Related Constraints:
Of the facilities listed in this report, the facilities listed below would be considered injection related constraints. These facilities would need to be built, uprated, or an operating guide developed, prior to this generation coming online:

- New 230 kV bay position and associated bus work at Ecklund for the interconnection of the radial 230 kV line to the Baldwin 230/34.5 kV collector sub
- Uprate Hilken – Bismarck 230 kV line to 391 MVA
- Mitigate the loading on the Garrison – Beulah 115 kV to at least 132 MVA emergency.
- Restudy the Garrison Special Protection Scheme for prior outage conditions.

These study results indicate the addition of the interconnection request GI-0715 will not degrade the reliability of the MAPP system. It does result in some unacceptable loading conditions due to the interconnection of the project. The study results demonstrate that the Western Area Power Administration (Western)/ Basin Electric Power Cooperative (Basin)/ Heartland Consumers Power District Integrated System (IS) is capable of accommodating the interconnection request by mitigating the impacted facilities.

The results of this study are based on available data and assumptions made at the time of conducting this study. If any of the data and/or assumptions made in developing the study models change, the results provided in this report may not apply.

APPENDICIES

Appendix A – Model Documentation

- Appendix A.1 – Case Naming Convention
- Appendix A.2 – Generator Power flow data
- Appendix A.3 – Generator dynamic data
- Appendix A.4 – Power Flow information files

Appendix B – Power flow summary reports and maps

- Appendix B.1 – GI-0715 location
- Appendix B.2 – SUOP 2010
- Appendix B.3 – SUPK 2010
- Appendix B.4 – WIPK 2010
- Appendix B.5 – SUPK 2020
- Appendix B.6 – SUOP 2020

Appendix C – Transient Stability Tables

- Appendix C.1 – FaultTable
- Appendix C.2 – GI-0715 2011 Summer Off Peak Stability Tables
- Appendix C.3 – GI-0715 2011 Summer Off Peak Stability Tables ag
- Appendix C.4 – GI-0715 2011 Summer Off Peak Stability Tables eb
- Appendix C.5 – GI-0715 2011 Summer Off Peak Stability Plots
- Appendix C.6 – GI-0715 2011 Summer Off Peak Stability Plots ag
- Appendix C.7 – GI-0715 2011 Summer Off Peak Stability Plots eb

Appendix D – Thermal and Voltage Analysis

- Appendix D.1 – SUOP 2010 – Thermal Analysis
- Appendix D.2 – SUOP 2010 – Voltage Analysis
- Appendix D.3 – SUPK 2010 – Thermal Analysis
- Appendix D.4 – SUPK 2010 – Voltage Analysis
- Appendix D.5 – WIPK 2010 – Thermal Analysis
- Appendix D.6 – WIPK 2010 – Voltage Analysis
- Appendix D.7 – SUPK 2020 – Thermal Analysis
- Appendix D.8 – SUPK 2020 – Voltage Analysis
- Appendix D.9 – SUOP 2020 – Thermal Analysis
- Appendix D.10 – SUOP 2020 – Voltage Analysis

Appendix E – Distribution Factor Analysis

- Appendix E.1 – Summer Peak 2010 gen to gen
- Appendix E.2 – Summer Peak 2010 gen to load
- Appendix E.3 – Summer Peak 2020 gen to gen
- Appendix E.4 – Summer Peak 2020 gen to load

Appendix F – Short Circuit Analysis

- Appendix F.1 – Short Circuit Analysis