Technical Report

250 MW Wind Powered Generation
Pondera County, Montana
WAPA Generation Interconnection Queue: GI-0709

Interconnection Feasibility Study

Upper Great Plains Regional Office
Transmission System Planning
Billings, Montana
Phone: 406-247-7400
FEJ, B4402.BL

September, 2008

Table of Contents

Executive Summary……3

1. Introduction ……5

2. Methodology……7

3. Generation Interconnect Procedure……7

4. Study Criteria and Assumptions……8
- **4.1 Project Parameters**
- **4.2 System Parameters**
- **4.3 WECC/NERC Criteria**
- **4.4 Study Models**
- **4.5 Senior Queued Interconnect Requests – MT1 Zone**

5. Steady State Analysis……9
- **5.1 250 MW Nameplate Output**
- **5.2 110 MW Reduced Output**
- **5.3 Analysis Without NorthWestern 115kV Upgrades**
- **5.4 2012 Heavy Summer Case Work**
- **5.5 2010 Light Autumn Case Work**
- **5.5 2010 Light Autumn Case Work Without NWE 115kV Upgrades**

6. Short-Circuit Analysis ……12

7. Conceptual Cost Estimating……13

Appendix A – Load Flow Outputs……14

Executive Summary

This Interconnection Feasibility Study (IFS) Report summarizes the partial impacts of a requested 250-MW generation (Project) interconnection to Western Area Power Administration's (Western's) Conrad 230-kV Substation located in Pondera County, Montana under Western's Large Generator Interconnection Procedures (LGIP). The interconnection request will connect to the Western/Basin Electric Power Cooperative/Heartland Consumers Power District Integrated System (IS). This Project is identified as GI-0709 in Western's IS generator interconnection queue[1].

Due to sparse industrial and residential load within Western's WAUW control area, service for the Project as a Network Resource (NR) to serve native load is not feasible. Available load within the WAUW control area to sink the Project is significantly inadequate. Because the study area and WAUW control area is electrically isolated to the East and North, all bulk generation in excess of any local native load must be dispatched South of Great Falls over NorthWestern Energy's (NWE's) transmission system. NWE's South of Great Falls interface has been identified in other studies as a congested path. Therefore, this study focuses on interconnection as an Energy Resource (ER) with and without system upgrades. Project generation is dispatched into the system swing bus outside the WAUW control area via NWE's congested path South of Great Falls.

Based on "active" prior queue projects and associated mitigation installed, the following interconnect options are available for the Project with conceptual costing:

1) Interconnection of 0 MW of Energy Resource (ER) is feasible <u>without</u> facility upgrades.
2) Interconnection of 250 MW of (ER) is feasible with installation of a new 230/115 kV transformer at Conrad and new transmission outlet from Conrad to Great Falls. This conceptual cost option is $31.7M.
3) Interconnection of 250 MW of (ER) is feasible with installation of a WECC/NERC approved special protection system (SPS) that will immediately reduce generation for localized contingencies and emergency conditions in lieu of a new transmission outlet from Conrad to Great Falls. This conceptual cost option is $1.2M.
4) Interconnection of 110 MW of (ER) is feasible <u>without</u> installation of a SPS for localized contingencies and emergency conditions. This conceptual cost option is $1.0M.

Both options 2) and 4) may still require a SPS for N-2 contingencies and delivery related constraints South of Great Falls.

Results provided that address NWE's system beyond the study area are provided for information only. They are preliminary and beyond the required scope and study area of the IFS. Confirmation of these results will be accomplished by means of a System Impact Study (SIS) should the Customer proceed with the interconnection process.

Based on the prior-queued interconnections with associated mitigation and required facility improvements, this study discovers the following system intact (N-0) impacts with the addition of this Project at full output:

- <u>*NWE System Beyond the Study Area:*</u> Harlowton-Two Dot 110kV circuit Category A rating exceeded by 12% (i.e. nominal rating).[2]

Based on the prior-queued interconnections with associated mitigation and required facility improvements, this study discovers the following single contingency (N-1) impacts with the addition of this Project at full output:

[1] The Interconnection Request is also identified as project #39218-01 in the merged coordination queue maintained and posted by the MidWest ISO.
[2] This impact is delivery related.

- *Western Integrated System:* Conrad 230/115kV transformer (100MVA) Category A rating exceeded by 102% for loss of any section of the Conrad-Bole-Great Falls 230kV circuit.
- *NWE System:* Both existing and future Conrad-Great Falls 115kV circuits Category A ratings exceeded by 28% for loss of the Conrad-Bole 230kV circuit.[3]
- *NWE System:* Existing Great Falls 115/100kV transformer Category A rating exceeded by 44% and proposed new transformer exceeded by 29% for loss of the Conrad-Bole 230kV circuit.[4]
- *NWE System Beyond the Study Area*: Local Judith Gap 100kV system Category A rating exceeded by up to 58% for loss of the Broadview-Judith Gap 230kV circuit.[5]

Additional sensitivity analysis was performed to evaluate NWE's prior queue requests receiving conditional and/or partial service prior to completion of NWE's proposed Cut Bank – Conrad – Great Falls 115kV circuit. Without this new Cut Bank – Conrad – Great Falls circuit, the study area suggests that stability related issues exist. This conclusion is based on a propagating voltage collapse seen in the study area for a loss of any section of the Conrad-Bole-Great Falls 230kV circuit with Project outputs above 110 MW. If interconnection of this Project is made prior to completion of the NWE's 115kV circuit, output of the Project will likely be limited to 0 MW during localized contingencies and emergency conditions.

These IFS results are a function of the outcome of all prior queued generation interconnect requests that are still active and are therefore subject to change. If the Customer proceeds with the interconnection process, the System Impact Study will eliminate all prior queue requests that have since been withdrawn or no longer actively moving forward with the interconnection process.

[3] The second circuit does not currently exist. It is required mitigation for a prior queue interconnect request.

[4] The second transformer does not currently exist. It is required mitigation for a prior queue interconnect request.

[5] This impact is a delivery related. An initial 17% overload is seen prior to the addition of this Project queue interconnection.

1. Introduction

This Interconnection Feasibility Study (IFS) Report summarizes the partial impacts of a requested 250-MW generation interconnection (Project) under Western Area Power Administration's (Western) Large Generator Interconnection Procedures (LGIP) to Western's Conrad 230-kV Substation located in Pondera County Montana. The interconnection request will connect the Western/Basin Electric Power Cooperative/Heartland Consumers Power District Integrated System (IS). This project is identified as GI-0709 in Western's IS generator interconnection queue[6]. The requested in-service date for the Generating Facility is December 1, 2008. This study was performed as an "in-queue study", and there were no other prior-queued unresolved generation interconnection requests in the IS Generator Interconnection Queue. Other prior-queued ("senior") interconnection requests in the neighboring Transmission Providers' queues in the study area were included in the study as noted. The Interconnection Customer has requested that both Network Resource Interconnection Service and Energy Resource Interconnection Service be evaluated.

The Project is referred to as the Pondera Wind Energy Center. It is electrically located within the Western Electricity Coordinating Council (WECC) footprint and jurisdiction. The requested Point of Interconnection at Western's Conrad Substation 230kV bus is presently located within NorthWestern Energy's Montana Control Area (NWMT). The study area encompasses North-Central Montana (roughly defined by a circle drawn through Havre, Shelby, Cut Bank, Conrad, Great Falls and back to Havre). NorthWestern Energy (NorthWestern) was identified as an Affected System, and NorthWestern representatives were consulted and provided input throughout the study process.

This IFS is intended to identify major impacts and/or constraints which may limit the ability of the project to interconnect to the system prior to conducting a more detailed Interconnection System Impact Study (ISIS) and Interconnection Facility Study in subsequent steps of the interconnection process. The impacts and constraints are identified via single-line diagram load-flow outputs of each base case, pertinent system intact ("N-0") base cases, post-contingent ("N-1") cases and other known sensitivity scenarios. The transmission system is monitored for: a) thermal overload violations, b) voltage violations and c) short circuit interrupting capabilities. The study base cases include near-term (less than 5 years) peak and off-peak system conditions.

This study does <u>not</u> address transmission service or deliverability of the generation. However, findings of this study relative to NorthWestern's system in part imply transmission and deliverability impacts. Final interconnection requirements will depend on findings of the ISIS and Facility Study. These studies will further consider transmission service and/or deliverability, credible N-2 contingencies, system stability, normal operational constraints, prior outage constraints, all outstanding third party impacts, additional out-year base case scenarios if needed, detailed facility improvements and detailed cost estimates. Presently, there are no senior Transmission Service Requests (TSRs) to Western's transmission system that are associated with the senior queue LGI's considered with this study.

[6] The Interconnection Request is also identified as project #39218-01 in the merged coordination queue maintained and posted by the MidWest ISO.

The following interconnect request listing for this Project (GI-0709) is provided in the IS Generation Interconnection Queue:

IS Queue #	MISO Queue #	Queue Date	Control Area	IS Zone	Point of Interconnect / County	State	Net Plant Max MW Summer/Winter
(GI-0709)	39218-01	5-16-07	NWMT	MT1	Conrad / Pondera	MT	250 / 250

The requested point of interconnection (POI) of this Project is at Western's Conrad Substation 230kV bus. The Conrad Substation is located approximately 50 miles north of Great Falls, MT. A location map is shown below.

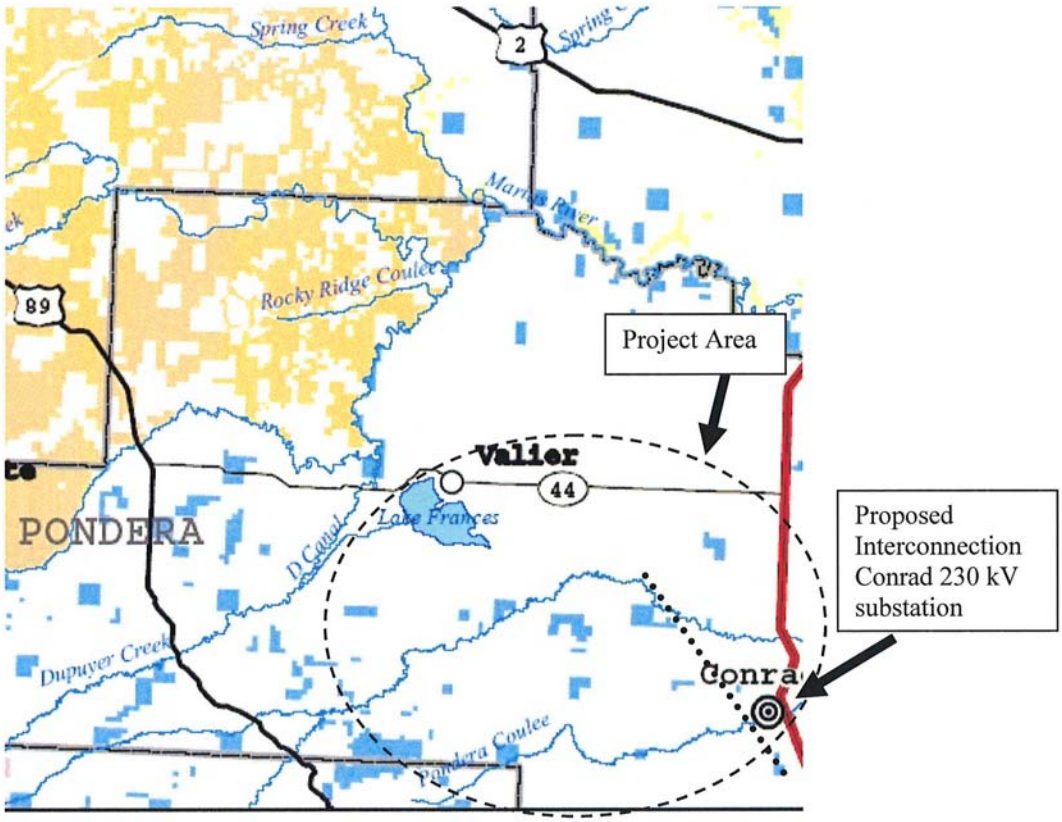

The Project proposes to use a total of 167 GE Model 1.5 MW doubly–fed induction machines. The following project configuration is proposed at the point of interconnection:

Pondera Wind Energy Center (250 MW)
Preliminary One-Line Diagram

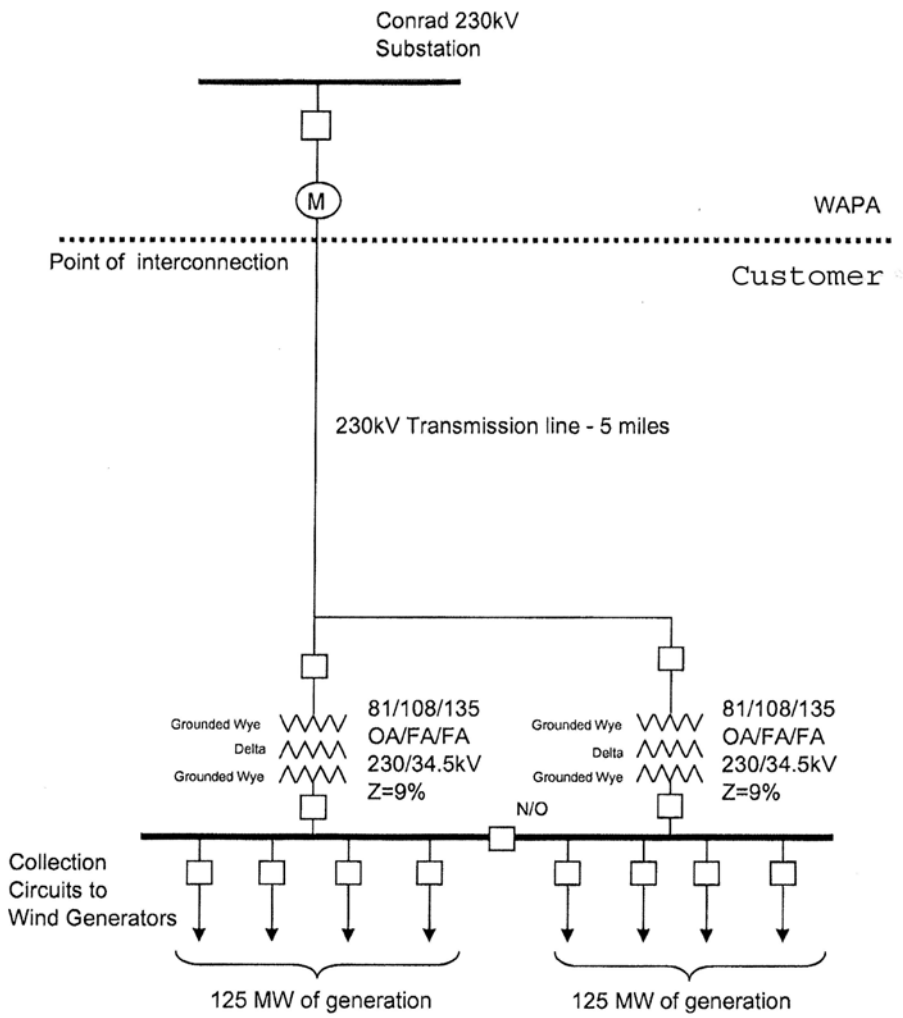

2. Methodology

Due to sparse industrial and residential load within Western's WAUW control area, service for the Project as a Network Resource (NR) is not feasible. Available load within the WAUW control area to sink the Project is significantly inadequate. Because the study area and WAUW control area is electrically isolated to the East and North, all bulk generation in excess of any local native load must be dispatched South of Great Falls over NorthWestern Energy's (NWE's) transmission system. NWE's South of Great Falls interface has been identified in other studies as a congested path. Therefore, this study focuses on interconnection as an Energy Resource (ER) with and without system upgrades. Project generation is dispatched into the system swing bus outside the WAUW control area via NWE's .

3. Generation Interconnect Procedure

The IS generation interconnection requests are grouped in zones (IS Zone) to indicate requests that generally would have greatest impact on each other, and ideally would be studied in queued order within that IS Zone. Western will proceed with the evaluation of the generation interconnection requests in each IS Zone on a simultaneous basis, where possible. Where there is a question or conflict regarding system impacts between interconnection requests in separate IS Zones, the overall queue position *and transmission service requests* will be utilized for determination of study order, system impacts, and determination of associated system upgrade requirements.

4. Study Criteria and Assumptions

4.1 Project Parameters

Point of Interconnection (POI)	= Western's 230 kV Conrad Substation
Unit Type/Model	= GE 1.5 - 60 Hz, Double-fed Induction Wind Turbines
Unit Rating	= 1.5 MW
Total No. of Units	= 167
Total Plant Capacity	= 250/250 MW Summer/Winter.
Collector Voltage	= 34.5 kV
Collector System	= 34.5 - 230 kV substation by Owner (Gnd Y / Delta / Gnd Y)
Delivery System	= 5 miles 230 kV H-frame transmission by Owner to POI
Regulation Method	= Voltage Control (scheduled to 1.02 p.u. at 34.5 kV bus)

4.2 System Parameters

Primary generation and system transfers associated with the study area were set as follows:

Great Falls Plants	= 170 / 210 MW (LA case / HS case)
Fort Peck Plant	= 62 / 62 MW (LA case / HS case)
Miles City DC Tie	= 150 MW West-East (LA case)
	= 195 MW East-West (HS case)
Crossover Phase Shifter	= 77 MW North-South (LA case)
	= 46 MW North-South (HS case)
Project #32 Plant **	= 268 MW
Project #44 Plant **	= 104 MW
Project #73 Plant **	= 100 MW
Generation Dispatch (i.e. 'sink')	= System Swing

(** Senior queue request. See Section 2.3.2 below)

4.3 WECC/NERC Criteria

Transmission system voltages were monitored against the following WECC/NERC reliability criteria:

1. Normal (Category A): min.=0.95 p.u. max.=1.05 p.u.

2. Emergency (Category A): min.=0.90 p.u. max.=1.10 p.u.

Western's nominal system operating voltage range for the study area is considered to be 0.99 to 1.04 per unit (p.u.).

Facility loadings were monitored against the following WECC/NERC reliability criteria:

1. Normal: 100% of NORMAL for All Facilities = RATE A
2. Emergency: 110% of NORMAL for Transmission Lines = RATE B
   125% of NORMAL for Transformers = RATE B

These values may not apply to all WECC members as they may have a different basis or criteria for certain emergency conditions. Emergency limits are short-term loading limits that may be allowed for up to 30 minutes. After 30 minutes, reliability criteria dictate that the system must be restored within Normal limits. Also, there is no WECC requirement for monitoring sub-transmission facilities (<115kV). However, voltage violations and overloads of the sub-transmission facilities were monitored throughout the analyses, based on the same limits recommended for bulk transmission systems.

4.4 Study Models

The models used for the study was based on the WECC base case models conditioned by NorthWestern Energy for the study area. The cases include a 2010 Light Autumn case to replicate a light-loading heavy-transfer condition and a 2012 Heavy Summer case to replicate a heavy-loading heavy-transfer condition. These cases were then modified in PSSE/rev 30.3.2 to include the facilities associated with Project (GI-0709). The cases were then brought into PSSE/rev 31 and single-line diagrams were created to represent both the base case and contingency sensitivities considered.

The final base cases are named as follows:

- ✓ 10nat_gf170_nogfov_gftr_con250_v3032.sav
- ✓ 12nat_gfmx_nogfov_gftr_con250_v3032.sav

4.5 Prior Queued Interconnection Requests – MT1 Zone

The following prior queue interconnection requests that are still active and relevant to the study area have been included in the Feasibility Study for GI-0709:

NorthWestern Energy Gen. Interconnect Queue (Proj. #)	Queue Date	In-Service Date	Control Area	Point of Interconnect	Location (Co. / State)	Facility Type	Net Plant MW Output (Sum / Wtr)
32	7-1-04	3-31-09	NWMT	Great Falls 230kV Switchyard	Cascade / MT	Base Load Coal Fired	268 / 268
44	4-10-06	10-15-08	NWMT	Cut Bank-Conrad 115kV Ckt	Pondera / MT	Wind	104 / 104
73	7-13-07	11-30-08	NWMT	Cut Bank-Shelby 115kV Ckt	Glacier / MT	Wind	100 / 100

All prior queued projects in the study area have been submitted with NorthWestern Energy. All are active interconnection requests for NR and/or ER service and all have pending Transmission Service Requests (TSR) with NorthWestern.

5. Steady State Analysis

The steady state analysis was preformed with all prior queue interconnects and associated mitigation in place:

The following N-1 single contingencies were closely monitored for NERC/WECC reliability criteria violations. All other N-1 contingencies were deemed non-threatening following preliminary analysis and are not provided in this report.

- Conrad-Bole 230kV circuit
- Conrad-Dutton 115kV circuit
- Shelby 2-Rudyard 115kV circuit
- Broadview-Judith Gap 230kV circuit
- East Helena-Three Rivers 230kV circuit

As the contingency analysis preceded, it was concluded that the Shelby 2-Rudyard and East Helena-Three Rivers outages were less threatening and likewise mitigated by other more severe contingency mitigation.

5.1 250 MW Nameplate Output

- ✓ The natural flow of power during N-0 normal operating conditions is approximately 74% over Western's 230kV transmission system to NorthWestern's Great Falls Substation and approximately 26% over NorthWestern's 115kV transmission system to the Great Falls Substation.
- ✓ Overall worst case conditions exist during light-loading and heavy-transfers out of the study area versus heavy-loading and heavy-transfers into the study area.
- ✓ System intact normal operating conditions are maintained within WECC and NERC criteria throughout the North-Central Montana study area and Western IS system. The bulk 230kV system is fairly robust with 115kV prior queue mitigations in place (NorthWestern Energy's queue). Moderate overloads are likely outside the study area within NorthWestern's 100kV transmission system.
- ✓ The worst N-1 contingency within the study area is a loss of the Conrad-Bole 230kV circuit. This contingency overloads the Conrad transformer to 202% of rating and both NorthWestern Conrad-Great Falls 115kV circuits to 125% of rating (one of these 115kV circuits is new and required to mitigate a prior NorthWestern Energy LGI that is still active).
- ✓ Two additional N-1 contingencies outside the study area are known to be problematic and their evaluation was suggested by NorthWestern as a potential Affected Party impact. These contingencies relate to delivery of power South of Great Falls. They include loss of either the Broadview-Judith Gap 230kV circuit or the East Helena-Three Rivers 230kV circuit (a new 230kV circuit required to mitigate a prior NorthWestern LGI that is still active). Significant overloads are seen in NorthWestern's East Helena and Judith Gap service areas on the 100kV sub-transmission system during these contingencies.
- ✓ Probable mitigation options are:

  1) Installation of a Special Protection System (SPS) that will trip all or a portion of the output of the Project during 230kV outages between Conrad and Great

Falls (note; an SPS may still be required for N-2 contingencies and delivery related constraints South of Great Falls),
2) Replacement of the existing 230/115kV autotransformer at Conrad plus an additional 115 or 230kV transmission line from Western's Conrad Substation to NorthWestern's Great Falls Substation (note; an SPS may still be required for N-2 contingencies and delivery related constraints South of Great Falls).

- ✓ Operating constraints will be required during prior outage conditions until the system has been restored to it's system intact normal configuration, i.e. Project plant output reductions;

5.2 110 MW Reduced Output:

The following are modifications to the 250 MW Full Output study results (listed above) that result from a reduction of the maximum Project output to 110 MW. All other 250 MW Study Results listed above still apply.

- ✓ Maximum Project output reduction to 110 MW mitigates the overloads on Western's Conrad transformer and NorthWestern's Conrad-Great Falls 115kV circuits for a loss of the Conrad-Bole 230kV circuit. Therefore, this reduction eliminates the need for an SPS for interconnection (note; an SPS may still be required for N-2 and delivery related constraints South of Great Falls).
- ✓ Maximum Project output reduction to 110 MW significantly reduces overloads on NorthWestern's East Helena and Judith Gap 100kV transmission system that result from a loss of either the Broadview-Judith Gap 230kV circuit or the East Helena-Three Rivers 230kV circuit (a new 230kV circuit required to mitigate a senior NorthWestern Energy LGI that is still active)..

5.3 Analysis Without NorthWestern 115kV Upgrades:

Additional sensitivity analysis was preformed to evaluate a scenario in which NorthWestern's prior queue requests are receiving conditional and/or partial service prior to completion of the associated new Cut Bank – Conrad – Great Falls 115kV circuit. Without the new Cut Bank – Conrad – Great Falls circuit, the study area suggests that stability related issues may exist. This conclusion is based on a propagating voltage collapse seen in the study area for a loss of any section of the Conrad-Bole-Great Falls 230kV circuit with Project outputs above 110 MW. If interconnection of this Project is made prior to completion of the NorthWestern's 115kV circuit, output of the Project will likely be limited to 0 MW during localized contingencies and emergency conditions. A thorough Operations Guide would be required for utilization by both Western's and NorthWestern's dispatch prior to completion of the new 115kV circuit.

The load flow case names and supporting single-line diagrams associated with this analysis are provided in the following sections of this report. Refer to the single-line diagrams provided in Appendix A to view voltage profiles on a "kV / per unit voltage" basis and thermal equipment loading on an "MVA / % loading basis". Overload and voltage screening outputs follow each single-line. Descriptive case names for each load flow provided in Appendix A are provided here.

5.4 2012 Heavy Summer Case Work

2012 HS System Intact (N-0) outputs:

- ✓ 12HS_con0_n-0 (Project @ 0 MW)
- ✓ 12HS_con250_n-0 (Project @ 250 MW)
- ✓ 12HS_con110_n-0 (Project @ 110 MW)

2012 HS Conrad-Bole 230kV Outage (N-1) outputs:

- ✓ 12HS_con250_n-1con-bol230 (Project @ 250 MW)

2012 HS Shelby-Rudyard 115kV Outage (N-1) outputs:

- ✓ 12HS_con250_n-1sh2-ry115 (Project @ 250 MW)

2012 HS Conrad-Dutton 115kV Outage (N-1) outputs:

- ✓ 12HS_con250_n-1con-dut115 (Project @ 250 MW)

2012 HS Broadview-Judith Gap 230kV Outage (N-1) outputs:

- ✓ 12HS_con250_n-1bv-jg230 (Project @ 250 MW)

2012 HS East-Helena 230kV Outage (N-1) outputs:

- ✓ 12HS_con250_n-1eh-3r230 (Project @ 250 MW)

5.5 2010 Light Autumn Case Work

2010 LA System Intact (N-0) outputs:

- ✓ 10LA_con0_n-0 (Project @ 0 MW)
- ✓ 10LA_con250_n-0 (Project @ 250 MW)
- ✓ 10LA_con110_n-0 (Project @ 110 MW)

2010 LA Conrad-Bole 230kV Outage (N-1) outputs:

- ✓ 10LA_con250_n-1con-bol230 (Project @ 250 MW)
- ✓ 10LA_con110_n-1con-bol230 (Project @ 110 MW)

2010 LA Broadview-Judith Gap 230kV Outage (N-1) outputs:

- ✓ 10LA_con250_n-1bv-jg230 (Project @ 250 MW)
- ✓ 10LA_con110_ n-1bv-jg230 (Project @ 110 MW)

2010 LA East Helena-3 Rivers 230kV Outage (N-1) outputs:

- ✓ 10LA_con250_n-1eh-3r230 (Project @ 250 MW)

5.6 2010 Light Autumn Case Work without NorthWestern 115kV Upgrades

2010 LA System Intact (N-0) outputs:

- ✓ 10LA_con250_115oos_n-0 (Project @ 250 MW)

2010 LA Conrad-Bole 230kV Outage (N-1) outputs:

- ✓ 10LA_con0_115oos_n-1con-bol230 (Project @ 0 MW)
- ✓ 10LA_con110_115oos_n-1con-bol230 (Project @ 110 MW)

2010 LA Broadview-Judith Gap 230kV Outage (N-1) outputs:

- ✓ 10LA_con110_ 115oos_n-1bv-jg230 (Project @ 110 MW)

6. Short-Circuit Analysis

Short-circuit analysis determines the fault contribution of the GI-0709 generator, in order to determine if the interrupting capability of the existing breakers is sufficient to accommodate GI-0709. The short-circuit analysis was completed with the Aspen One-Liner program. Three-phase and single line to ground fault currents were determined at Western's Conrad 230kV bus both with and without GI-0709.

The fault current levels for the Conrad bus, with the new Project connected, does not exceed the existing breaker short-circuit ratings. Maximum calculated short circuit MVA is 835 (2096 Amps).

7. Conceptual Cost Estimating

The following conceptual cost estimating is provided for each interconnection service option. Western Area Power Administration does not assume responsibility for the accuracy of these costs beyond conceptual planning purposes. Detailed budgetary costing will be made available upon completion of the interconnection process and a Facilities Study.

Interconnect Service Option	***Project Output***	***Facility Addition***	***Facility***	***Installed Cost (per $1,000 unit)***
ER	250 MW	230kV Line Terminal (Bkr & Half)	CON	$2,909
(Non-interruptible		Metering & Instrumentation	CON	$34
*for N-1 events)***		230/115-13.8kV Autotransformer (250 MVA)	CON	$2,880
		115kV Autotransformer Bay Upgrades	CON	$278
		230kV Line Terminal (Bkr & Half)	CON	$2,909
		Convert Existing Ring Bus to Bkr & Half	CON	$5,000
		60 Mi. 230kV H-Frame Transmission (954 ACSR)	CON-GTF	$14,820
		230kV Line Terminal (Bkr & Half)	GTF	$2,909
		TOTAL OPTION 2)		**$31,739**
ER *(SPS Interruptible for N-1 events)*	250 MW	230kV Line Terminal (Ring Bus)	CON	$1,001
		Metering & Instrumentation	CON	$34
		Special Protection System (SPS)	CON	$116
		TOTAL OPTION 3)		**$1,151**
ER	110 MW	230kV Line Terminal (Ring Bus)	CON	$1,001
(Non-interruptible		Metering & Instrumentation	CON	$34
*for N-1 events)***		**TOTAL OPTION 4)**		**$1,035**

*** A SPS may still be required for N-2 contingency events & delivery related issues*.

Appendix A

Load Flow Outputs

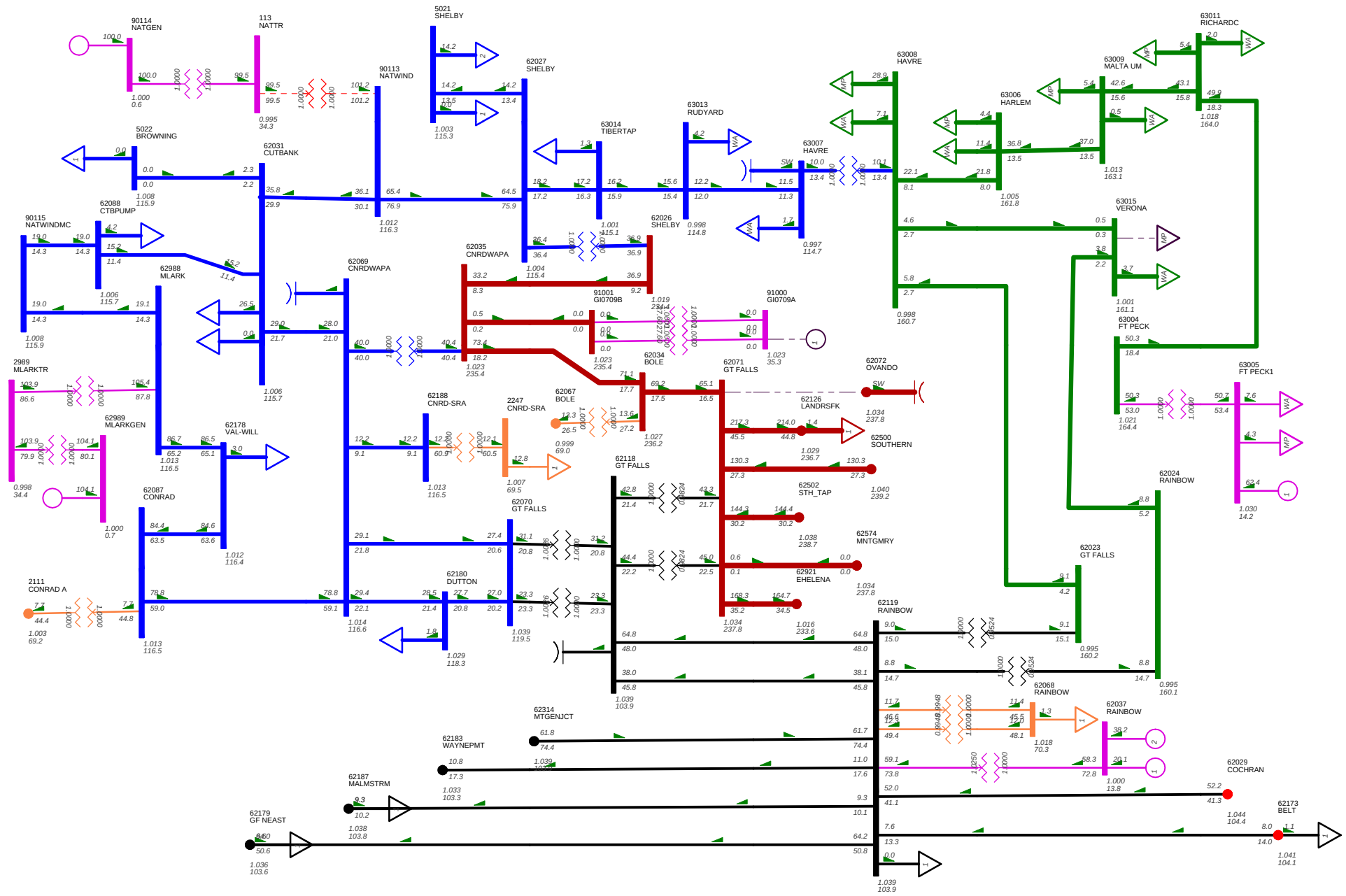

2012 HS BASE CASE: GTF=210, FP=62, GTF-3RVRS 230, NOGTF-OV
CTBWIND=100, VALWIND=104, HIGHWD=268, MCDC=195EW, CRO=46NS
FRI, JUN 13 2008 15:10
CONWIND=0 MW (N-0)

Bus - VOLTAGE (kV/PU)
Branch - MVA/% OF RATE A
Equipment - MVA

100.0%RATEA
0.990UV
1.040OV

kV: <=50.000 <=69.000 <=100.000 <=115.000
<=161.000 <=230.000 <=500.000 >500.000

```
 1
 2
 3  ------------------------------------------------------------------------------
 4
 5      PTI INTERACTIVE POWER SYSTEM SIMULATOR--PSS(tm)E    TUE, JUN 10 2008  14:41
 6   2012 HS BASE CASE:  GTF=210, FP=62, GTF-3RVRS 230, NOGTF-OV
 7   CTBWIND=100, VALWIND=104, HIGHWD=268, MCDC=195EW, CRO=46NS
 8                          OUTPUT FOR AREA 62 [MONTANA     ]
 9   BRANCH LOADINGS ABOVE  95.0 % OF RATING (MVA FOR TRANSFORMERS, CURRENT FOR NON-TRANSFORMER BRANCHES):
10
11   X--------- FROM BUS ----------X X---------- TO BUS -----------X               RATING SET A    RATING SET B    RATING SET C
12     BUS# X-- NAME --X BASKV  AREA   BUS# X-- NAME --X BASKV  AREA CKT LOADING  RATING PERCENT  RATING PERCENT  RATING PERCENT
13      107 KENFIELD    34.500*   62  90107 KFIELDGEN   0.5750    62  1     21.9    22.8    96.1    --      --      --      --
14      113 NATTR       34.500    62  90113 NATWIND     115.00*   62  1    101.2   100.0   101.2    --      --      --      --
15     3095 SUMATRA     69.000*   62  62584 SUMATRA     34.500    62  1     45.4    46.7    97.3    --      --      --      --
16    62011 HOLTER      6.6000*   62  62120 HOLTER      100.00    62  1     50.0    48.0   104.2    --      --      --      --
17    62025 CANYON      7.0000*   62  62122 CANYON F    100.00    62  1     59.2    62.0    95.5    --      --      --      --
18    62028 MORONY      100.00    62  62041 MORONY      13.800*   62  1     47.5    50.0    95.1    --      --      --      --
19    62038 BEAGLE      6.6000    62  62123 BEAGLE      100.00*   62  1     22.3    18.8   119.1    --      --      --      --
20    62042 BILGEN I    13.800*   62  62101 BILINGSX    50.000    62  1     65.4    60.0   109.1    --      --      --      --
21    62043 MONTANA1    13.800*   62  62059 MONTANA1    115.00    62  1     40.2    40.0   100.6    --      --      --      --
22
23
24
25
26  ------------------------------------------------------------------------------
27
28      PTI INTERACTIVE POWER SYSTEM SIMULATOR--PSS(tm)E    TUE, JUN 10 2008  14:41
29   2012 HS BASE CASE:  GTF=210, FP=62, GTF-3RVRS 230, NOGTF-OV
30   CTBWIND=100, VALWIND=104, HIGHWD=268, MCDC=195EW, CRO=46NS
31                          OUTPUT FOR AREA 62 [MONTANA     ]
32   BRANCH LOADINGS ABOVE  95.0 % OF RATING (MVA FOR TRANSFORMERS, CURRENT FOR NON-TRANSFORMER BRANCHES):
33
34   X--------- FROM BUS ----------X X---------- TO BUS -----------X               RATING SET A    RATING SET B    RATING SET C
35     BUS# X-- NAME --X BASKV  AREA   BUS# X-- NAME --X BASKV  AREA CKT LOADING  RATING PERCENT  RATING PERCENT  RATING PERCENT
36      107 KENFIELD    34.500*   62  90107 KFIELDGEN   0.5750    62  1     21.9    22.8    96.1    --      --      --      --
37      113 NATTR       34.500    62  90113 NATWIND     115.00*   62  1    101.2   100.0   101.2    --      --      --      --
38     3095 SUMATRA     69.000*   62  62584 SUMATRA     34.500    62  1     45.4    46.7    97.3    --      --      --      --
39    62011 HOLTER      6.6000*   62  62120 HOLTER      100.00    62  1     50.0    48.0   104.2    --      --      --      --
40    62025 CANYON      7.0000*   62  62122 CANYON F    100.00    62  1     59.2    62.0    95.5    --      --      --      --
41    62028 MORONY      100.00    62  62041 MORONY      13.800*   62  1     47.5    50.0    95.1    --      --      --      --
42    62038 BEAGLE      6.6000    62  62123 BEAGLE      100.00*   62  1     22.3    18.8   119.1    --      --      --      --
43    62042 BILGEN I    13.800*   62  62101 BILINGSX    50.000    62  1     65.4    60.0   109.1    --      --      --      --
44    62043 MONTANA1    13.800*   62  62059 MONTANA1    115.00    62  1     40.2    40.0   100.6    --      --      --      --
```

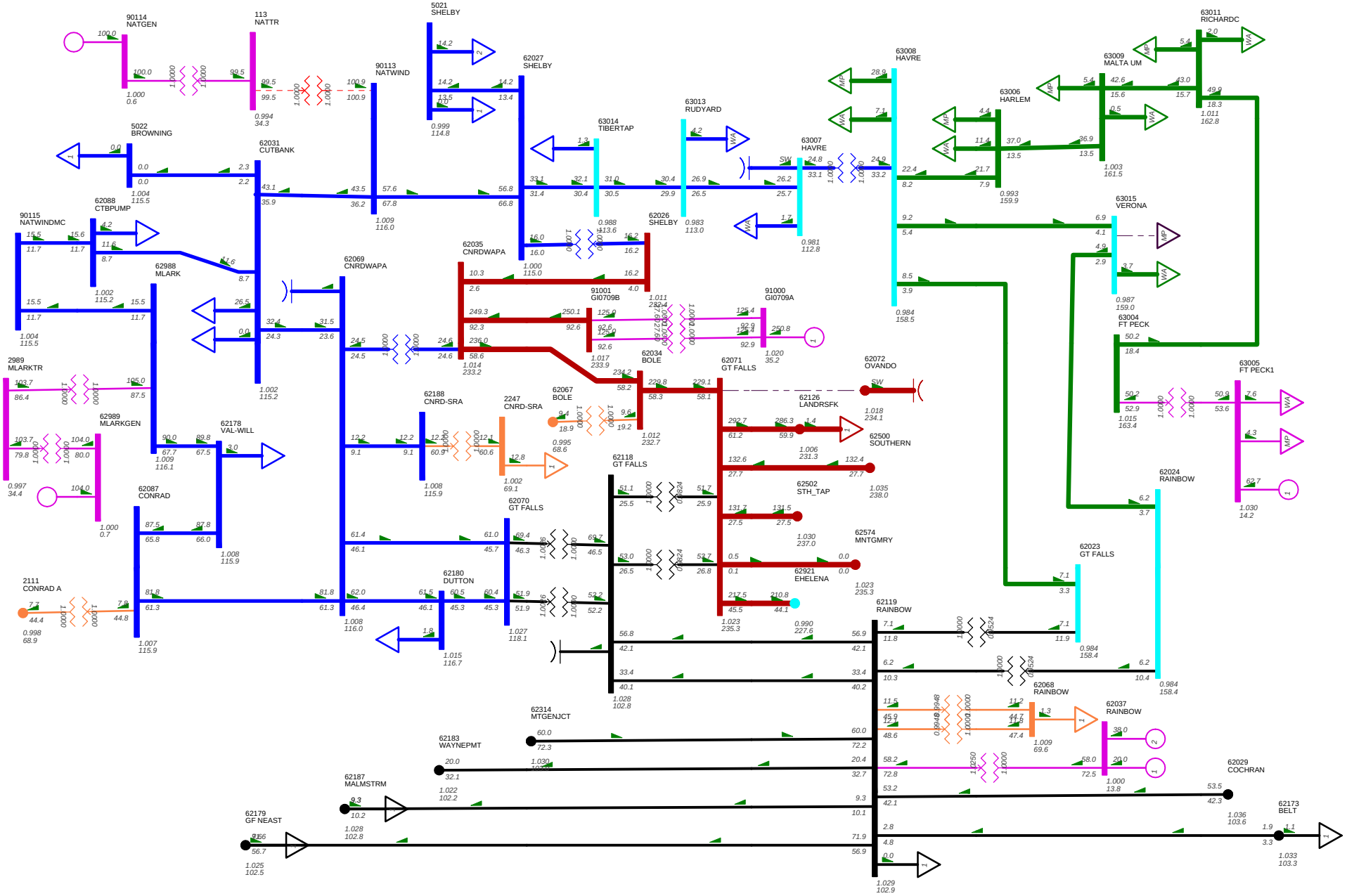

2012 HS BASE CASE: GTF=210, FP=62, GTF-3RVRS 230, NOGTF-OV
CTBWIND=100, VALWIND=104, HIGHWD=268, MCDC=195EW, CRO=46NS
FRI, JUN 13 2008 15:04
CONWIND=250 MW (N-0)

Bus - VOLTAGE (kV/PU)
Branch - MVA/% OF RATE A
Equipment - MVA

100.0%RATEA
0.990UV
1.040OV

kV: <=50.000 <=69.000 <=100.000 <=115.000
<=161.000 <=230.000 <=500.000 >500.000

```
 1
 2
 3  ------------------------------------------------------------------------------
 4
 5      PTI INTERACTIVE POWER SYSTEM SIMULATOR--PSS(tm)E    TUE, JUN 10 2008  15:03
 6   2012 HS BASE CASE:  GTF=210, FP=62, GTF-3RVRS 230, NOGTF-OV
 7   CTBWIND=100, VALWIND=104, HIGHWD=268, MCDC=195WE, CRO=46NS
 8                          OUTPUT FOR AREA 62 [MONTANA     ]
 9   BRANCH LOADINGS ABOVE  95.0 % OF RATING (MVA FOR TRANSFORMERS, CURRENT FOR NON-TRANSFORMER BRANCHES):
10
11   X--------- FROM BUS ----------X X---------- TO BUS -----------X               RATING SET A    RATING SET B    RATING SET C
12     BUS# X-- NAME --X BASKV  AREA   BUS# X-- NAME --X BASKV  AREA CKT LOADING  RATING PERCENT  RATING PERCENT  RATING PERCENT
13      107 KENFIELD    34.500*   62  90107 KFIELDGEN   0.5750    62  1     21.6    22.8    95.2    --      --      --      --
14      113 NATTR       34.500    62  90113 NATWIND     115.00*   62  1    100.9   100.0   100.9    --      --      --      --
15     3095 SUMATRA     69.000*   62  62584 SUMATRA     34.500    62  1     45.3    46.7    97.0    --      --      --      --
16    62011 HOLTER      6.6000*   62  62120 HOLTER      100.00    62  1     50.4    48.0   105.1    --      --      --      --
17    62025 CANYON      7.0000*   62  62122 CANYON F    100.00    62  1     59.2    62.0    95.5    --      --      --      --
18    62028 MORONY      100.00    62  62041 MORONY      13.800*   62  1     48.2    50.0    96.4    --      --      --      --
19    62034 BOLE        230.00    62  62035 CNRDWAPA    230.00*   62  1    232.8   402.4    57.8    --      --     100.0   232.8
20    62034 BOLE        230.00*   62  62071 GT FALLS    230.00    62  1    227.1   394.4    57.6    --      --     100.0   227.1
21    62038 BEAGLE      6.6000    62  62123 BEAGLE      100.00*   62  1     21.1    18.8   112.4    --      --      --      --
22    62042 BILGEN I    13.800*   62  62101 BILINGSX    50.000    62  1     65.4    60.0   109.1    --      --      --      --
23    62043 MONTANA1    13.800*   62  62059 MONTANA1    115.00    62  1     40.2    40.0   100.5    --      --      --      --
24    62106 HARLOWTN    100.00    62  62227 TWO DOT     100.00*   62  1     55.7    57.2    97.4    --      --      --      --
25
26
27
28    ------------------------------------------------------------------------------
29
30        PTI INTERACTIVE POWER SYSTEM SIMULATOR--PSS(tm)E    TUE, JUN 10 2008  15:03
31     2012 HS BASE CASE:  GTF=210, FP=62, GTF-3RVRS 230, NOGTF-OV
32     CTBWIND=100, VALWIND=104, HIGHWD=268, MCDC=195WE, CRO=46NS
33
34     BUSES WITH VOLTAGE GREATER THAN 1.0500:
35
36       BUS# X-- NAME --X BASKV AREA  V(PU)  V(KV)      BUS# X-- NAME --X BASKV AREA  V(PU)  V(KV)
37       2031 FAIRFILD    69.000   62 1.0645 73.451      3189 IVANHOE     2.4000   62 1.0665  2.560
38       9052 THFALLPM    50.000   62 1.0565 52.823      9070 FLODINLM    50.000   62 1.0545 52.726
39       9913 THFAPT*1    2.4000   62 1.0658  2.558      9914 THFAPTT1    2.4000   62 1.0593  2.542
40      62012 TOWN2       500.00   62 1.0943 547.16     62013 TOWN1       500.00   62 1.0943 547.16
41      62025 CANYON      7.0000   62 1.1062  7.743     62046 BROADVU     500.00   62 1.0752 537.58
42      62053 BROADV&2    500.00   62 1.0649 532.45     62054 BROADV&1    500.00   62 1.0654 532.70
43      62057 COLSTRP     500.00   62 1.0800 540.00     62501 SOUTHERN    18.000   62 1.0736 19.325
44      62821 LIGNITE     230.00   62 1.0748 247.21     90106 JG_CLR      0.5750   62 1.0537  0.606
45
46
47     BUSES WITH VOLTAGE LESS THAN 0.9500:
48
49       BUS# X-- NAME --X BASKV AREA  V(PU)  V(KV)      BUS# X-- NAME --X BASKV AREA  V(PU)  V(KV)
50       1043 DARNUTZR    69.000   62 0.9453 65.225      1044 SHERIDAN    69.000   62 0.9429 65.063
51       1045 TWINBRDG    50.000   62 0.9347 46.737      1046 VICTORIA    50.000   62 0.9422 47.109
52       1060 SILVER-R    50.000   62 0.9421 47.107      1067 E BENCH     69.000   62 0.9498 65.536
53       1069 PONTROCK    69.000   62 0.9384 64.748      1102 ASIMI 2     13.800   62 0.9352 12.906
54       3091 MUSLSHLL    50.000   62 0.9448 47.239      3092 MTSTMINE    50.000   62 0.9386 46.932
55       3093 MELSTONE    50.000   62 0.9329 46.646      3192 MTNSTATP    50.000   62 0.9389 46.943
56       5094 MCCONE-R    50.000   62 0.8925 44.624      5154 PTRSNFLT    69.000   62 0.9446 65.180
57       5412 GRASRANG    50.000   62 0.8866 44.332      5413 WNTT JCT    50.000   62 0.9339 46.694
58       5414 WINETT-R    50.000   62 0.8975 44.873      5417 MCCONE T    50.000   62 0.8977 44.885
```

59	5418	BOXLDR-R	50.000	62	0.8925	44.624	6010	MADSNVAL	69.000	62	0.9428	65.054
60	6021	MANHATEN	50.000	62	0.9498	47.492	6072	MOUNTVIL	69.000	62	0.9362	64.601
61	6080	ENNIS	69.000	62	0.9448	65.192	6181	ENNIS AT	69.000	62	0.9461	65.281
62	9531	MILTWNGN	2.3000	62	0.9299	2.139	62264	CONLIM T	100.00	62	0.9467	94.671
63	62265	TOWNSEND	100.00	62	0.9453	94.527	62266	TOSTON	100.00	62	0.9485	94.845
64	62271	CONTLIME	100.00	62	0.9461	94.606	62272	TOSTON-R	100.00	62	0.9485	94.845
65	62273	TOWNSD-R	100.00	62	0.9453	94.527						

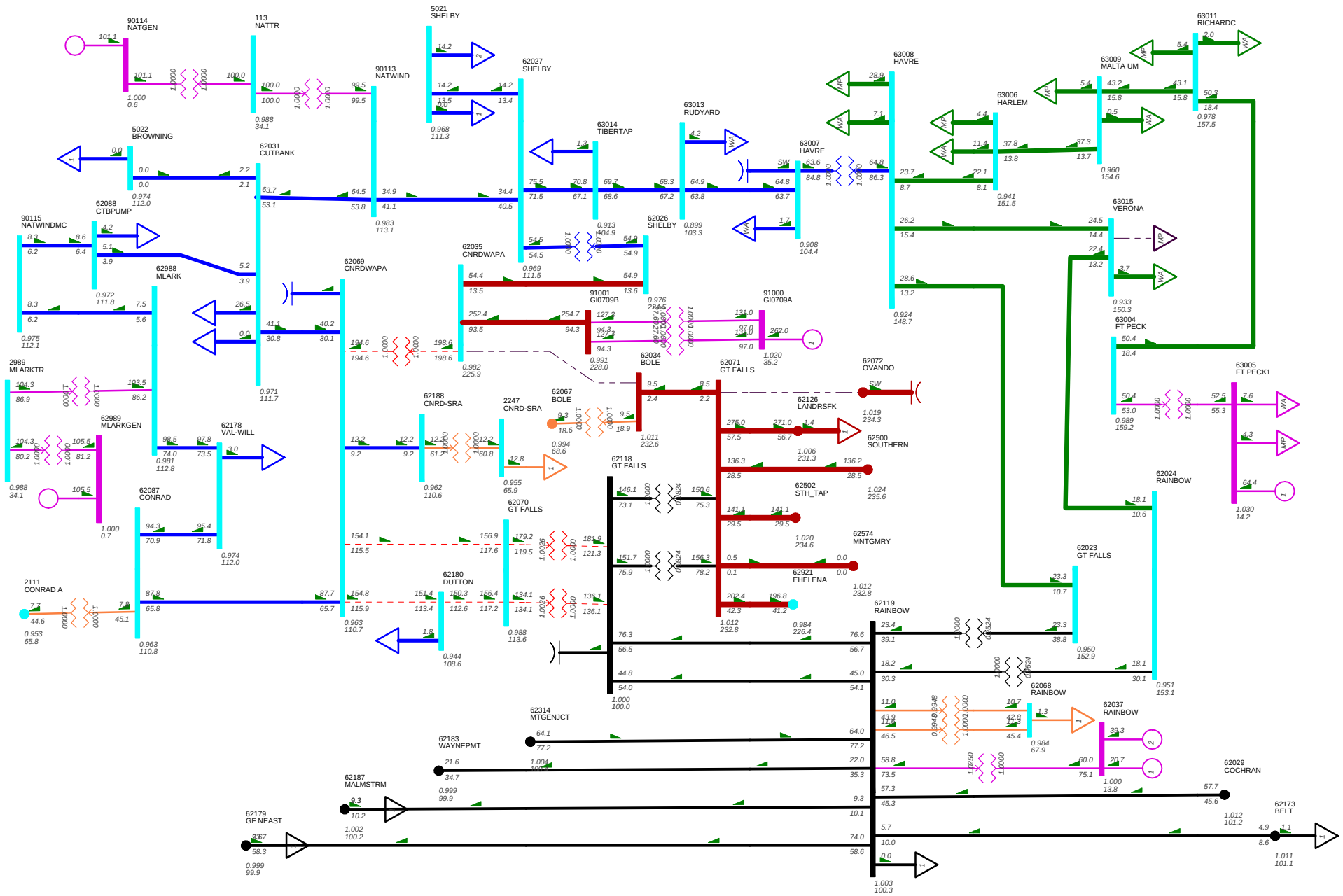

2012 HS BASE CASE: GTF=210, FP=62, GTF-3RVRS 230, NOGTF-OV
CTBWIND=100, VALWIND=104, HIGHWD=268, MCDC=195EW, CRO=46NS
FRI, JUN 13 2008 15:01
CONWIND=250 MW (N-1: CON-BOL 230kV)

Bus - VOLTAGE (kV/PU)
Branch - MVA/% OF RATE A
Equipment - MVA

100.0%RATEA
0.990UV
1.040OV

kV: <=50.000 <=69.000 <=100.000 <=115.000
<=161.000 <=230.000 <=500.000 >500.000

```
 1
 2
 3  ------------------------------------------------------------------------------
 4
 5      PTI INTERACTIVE POWER SYSTEM SIMULATOR--PSS(tm)E    TUE, JUN 10 2008  15:38
 6   2012 HS BASE CASE:  GTF=210, FP=62, GTF-3RVRS 230, NOGTF-OV
 7   CTBWIND=100, VALWIND=104, HIGHWD=268, MCDC=195EW, CRO=46NS
 8                          OUTPUT FOR AREA 62 [MONTANA     ]
 9   BRANCH LOADINGS ABOVE  95.0 % OF RATING (MVA FOR TRANSFORMERS, CURRENT FOR NON-TRANSFORMER BRANCHES):
10
11   X--------- FROM BUS ----------X X---------- TO BUS -----------X               RATING SET A    RATING SET B    RATING SET C
12     BUS# X-- NAME --X BASKV  AREA   BUS# X-- NAME --X BASKV  AREA CKT LOADING  RATING PERCENT  RATING PERCENT  RATING PERCENT
13      113 NATTR       34.500*   62  90113 NATWIND     115.00    62  1    100.0   100.0   100.0    --      --      --      --
14     3095 SUMATRA     69.000*   62  62584 SUMATRA     34.500    62  1     45.3    46.7    97.0    --      --      --      --
15    62011 HOLTER      6.6000*   62  62120 HOLTER      100.00    62  1     50.4    48.0   105.1    --      --      --      --
16    62025 CANYON      7.0000*   62  62122 CANYON F    100.00    62  1     59.2    62.0    95.5    --      --      --      --
17    62028 MORONY      100.00    62  62041 MORONY      13.800*   62  1     51.3    50.0   102.6    --      --      --      --
18    62029 COCHRAN     100.00    62  62040 COCHRAN     13.800*   62  1     61.6    60.0   102.7    --      --      --      --
19    62035 CNRDWAPA    230.00*   62  62069 CNRDWAPA    115.00    62  1    198.6   100.0   198.6    --      --      --      --
20    62035 CNRDWAPA    230.00*   62  91001 GI0709B     230.00    62  1    257.0   270.0    95.2   270.0    95.2    --      --
21    62038 BEAGLE      6.6000    62  62123 BEAGLE      100.00*   62  1     18.7    18.8    99.9    --      --      --      --
22    62042 BILGEN I    13.800*   62  62101 BILINGSX    50.000    62  1     65.4    60.0   109.1    --      --      --      --
23    62043 MONTANA1    13.800*   62  62059 MONTANA1    115.00    62  1     40.2    40.0   100.5    --      --      --      --
24    62069 CNRDWAPA    115.00*   62  62070 GT FALLS    115.00    62  1    160.1   133.4   120.0    --      --      --      --
25    62069 CNRDWAPA    115.00*   62  62180 DUTTON      115.00    62  1    160.8   133.5   120.5    --      --      --      --
26    62070 GT FALLS    115.00    62  62118 GT FALLS    100.00*   62  1    136.1   100.0   136.1    --      --      --      --
27    62070 GT FALLS    115.00    62  62118 GT FALLS    100.00*   62  2    181.9   150.0   121.3    --      --      --      --
28    62070 GT FALLS    115.00    62  62180 DUTTON      115.00*   62  1    159.2   133.5   119.2    --      --      --      --
29    62106 HARLOWTN    100.00    62  62227 TWO DOT     100.00*   62  1     56.2    57.2    98.2    --      --      --      --
30    91000 GI0709A     34.500*   62  91001 GI0709B     230.00    62  1    131.0   135.0    97.0   135.0    97.0    --      --
31    91000 GI0709A     34.500*   62  91001 GI0709B     230.00    62  2    131.0   135.0    97.0   135.0    97.0    --      --
32
33
34
35    ------------------------------------------------------------------------------
36
37        PTI INTERACTIVE POWER SYSTEM SIMULATOR--PSS(tm)E    TUE, JUN 10 2008  15:38
38     2012 HS BASE CASE:  GTF=210, FP=62, GTF-3RVRS 230, NOGTF-OV
39     CTBWIND=100, VALWIND=104, HIGHWD=268, MCDC=195EW, CRO=46NS
40
41     BUSES WITH VOLTAGE GREATER THAN 1.0500:
42
43       BUS# X-- NAME --X BASKV AREA  V(PU)  V(KV)      BUS# X-- NAME --X BASKV AREA  V(PU)  V(KV)
44       3189 IVANHOE     2.4000   62 1.0665  2.560      9052 THFALLPM    50.000   62 1.0565 52.823
45       9070 FLODINLM    50.000   62 1.0545 52.726      9913 THFAPT*1    2.4000   62 1.0658  2.558
46       9914 THFAPTT1    2.4000   62 1.0593  2.542     62012 TOWN2       500.00   62 1.0951 547.56
47      62013 TOWN1       500.00   62 1.0951 547.56     62025 CANYON      7.0000   62 1.0938  7.656
48      62046 BROADVU     500.00   62 1.0756 537.78     62053 BROADV&2    500.00   62 1.0655 532.75
49      62054 BROADV&1    500.00   62 1.0660 533.00     62057 COLSTRP     500.00   62 1.0800 540.00
50      62501 SOUTHERN    18.000   62 1.0633 19.140     62821 LIGNITE     230.00   62 1.0747 247.19
51      90106 JG_CLR      0.5750   62 1.0548  0.607
52
53
54     BUSES WITH VOLTAGE LESS THAN 0.9500:
55
56       BUS# X-- NAME --X BASKV AREA  V(PU)  V(KV)      BUS# X-- NAME --X BASKV AREA  V(PU)  V(KV)
57       1043 DARNUTZR    69.000   62 0.9447 65.184      1044 SHERIDAN    69.000   62 0.9423 65.020
58       1045 TWINBRDG    50.000   62 0.9327 46.637      1046 VICTORIA    50.000   62 0.9402 47.010
```

59	1060	SILVER-R	50.000	62	0.9402	47.008	1067	E BENCH	69.000	62	0.9492	65.496
60	1069	PONTROCK	69.000	62	0.9378	64.707	1102	ASIMI 2	13.800	62	0.9344	12.895
61	2039	BRADY	69.000	62	0.9488	65.466	2041	DUTTON	69.000	62	0.9449	65.198
62	2045	FT BENTN	69.000	62	0.9432	65.079	2201	COLLINST	69.000	62	0.9470	65.345
63	2202	COLLINS	69.000	62	0.9470	65.343	3091	MUSLSHLL	50.000	62	0.9449	47.244
64	3092	MTSTMINE	50.000	62	0.9387	46.936	3093	MELSTONE	50.000	62	0.9330	46.650
65	3192	MTNSTATP	50.000	62	0.9389	46.947	5094	MCCONE-R	50.000	62	0.8926	44.629
66	5154	PTRSNFLT	69.000	62	0.9471	65.349	5410	WINIFRED	50.000	62	0.9471	47.357
67	5412	GRASRANG	50.000	62	0.8867	44.337	5413	WNTT JCT	50.000	62	0.9340	46.699
68	5414	WINETT-R	50.000	62	0.8976	44.878	5417	MCCONE T	50.000	62	0.8978	44.890
69	5418	BOXLDR-R	50.000	62	0.8926	44.629	6010	MADSNVAL	69.000	62	0.9418	64.983
70	6021	MANHATEN	50.000	62	0.9472	47.358	6072	MOUNTVIL	69.000	62	0.9352	64.530
71	6080	ENNIS	69.000	62	0.9438	65.122	6181	ENNIS AT	69.000	62	0.9451	65.210
72	7019	BOULDERA	69.000	62	0.9491	65.488	7020	BOULDERB	69.000	62	0.9491	65.488
73	7023	ELKHORN	69.000	62	0.9466	65.315	9531	MILTWNGN	2.3000	62	0.9299	2.139
74	62023	GT FALLS	161.00	62	0.9497	152.91	62180	DUTTON	115.00	62	0.9444	108.61
75	62264	CONLIM T	100.00	62	0.9404	94.036	62265	TOWNSEND	100.00	62	0.9390	93.904
76	62266	TOSTON	100.00	62	0.9438	94.381	62267	CROWCREK	100.00	62	0.9484	94.845
77	62271	CONTLIME	100.00	62	0.9397	93.970	62272	TOSTON-R	100.00	62	0.9438	94.381
78	62273	TOWNSD-R	100.00	62	0.9390	93.904	62286	BRDWTR T	100.00	62	0.9469	94.691
79	62288	BRODWATR	100.00	62	0.9482	94.824						

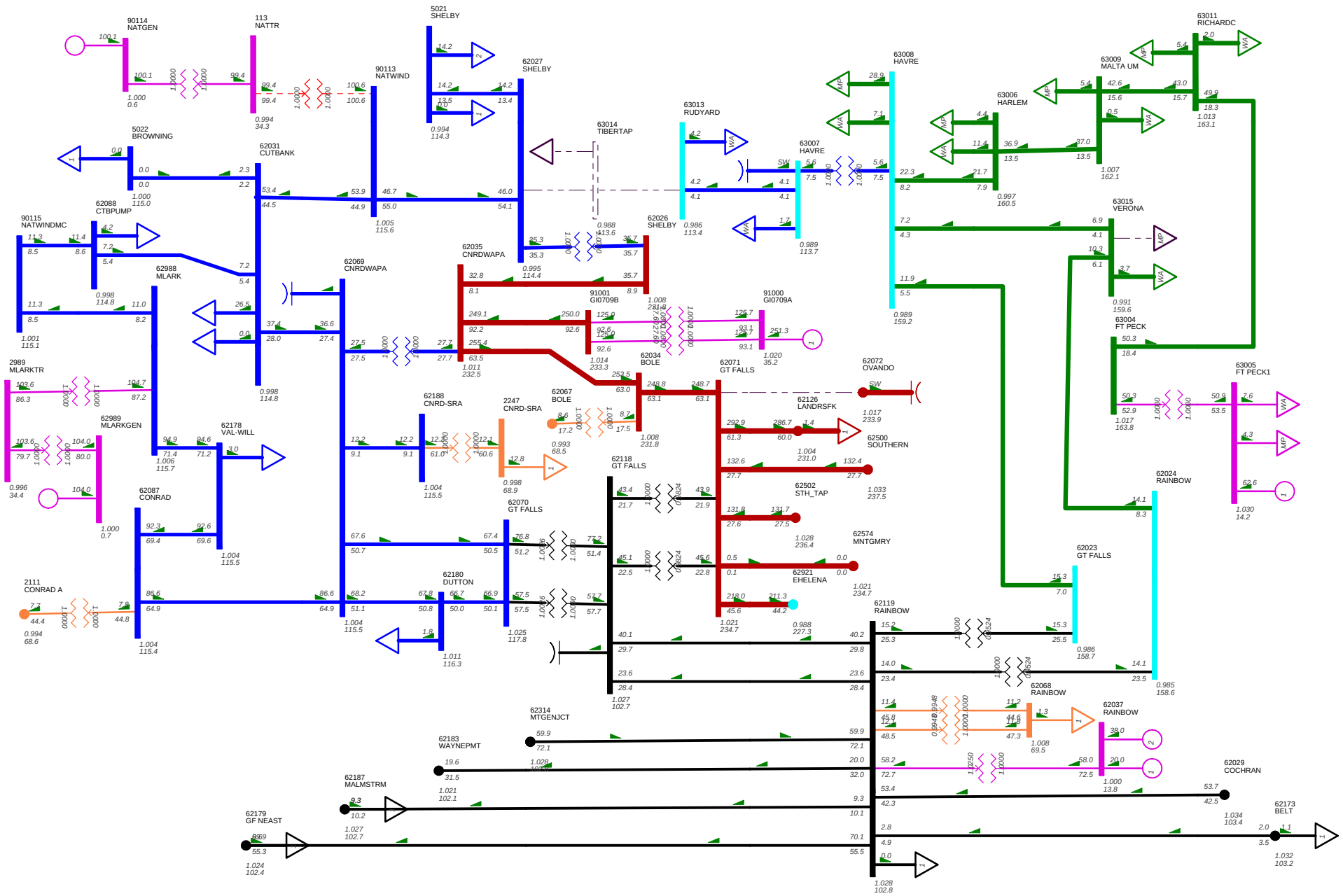

2012 HS BASE CASE: GTF=210, FP=62, GTF-3RVRS 230, NOGTF-OV
CTBWIND=100, VALWIND=104, HIGHWD=268, MCDC=195EW, CRO=46NS
FRI, JUN 13 2008 14:49
CONWIND=250 MW (N-1: SH2-RY 115kV)

Bus - VOLTAGE (kV/PU)
Branch - MVA/% OF RATE A
Equipment - MVA

100.0%RATEA
0.990UV
1.040OV

kV: <=50.000 <=69.000 <=100.000 <=115.000
<=161.000 <=230.000 <=500.000 >500.000

```
 1
 2
 3  ------------------------------------------------------------------------------
 4
 5      PTI INTERACTIVE POWER SYSTEM SIMULATOR--PSS(tm)E    FRI, JUN 13 2008  14:44
 6   2012 HS BASE CASE:  GTF=210, FP=62, GTF-3RVRS 230, NOGTF-OV
 7   CTBWIND=100, VALWIND=104, HIGHWD=268, MCDC=195EW, CRO=46NS
 8                          OUTPUT FOR AREA 62 [MONTANA     ]
 9   BRANCH LOADINGS ABOVE  95.0 % OF RATING (MVA FOR TRANSFORMERS, CURRENT FOR NON-TRANSFORMER BRANCHES):
10
11   X--------- FROM BUS ----------X X---------- TO BUS -----------X               RATING SET A    RATING SET B    RATING SET C
12     BUS# X-- NAME --X BASKV  AREA   BUS# X-- NAME --X BASKV  AREA CKT LOADING  RATING PERCENT  RATING PERCENT  RATING PERCENT
13      107 KENFIELD    34.500*   62  90107 KFIELDGEN   0.5750    62  1     21.6    22.8    95.0    --      --      --      --
14      113 NATTR       34.500    62  90113 NATWIND     115.00*   62  1    100.6   100.0   100.6    --      --      --      --
15     3095 SUMATRA     69.000*   62  62584 SUMATRA     34.500    62  1     45.3    46.7    97.0    --      --      --      --
16    62011 HOLTER      6.6000*   62  62120 HOLTER      100.00    62  1     50.4    48.0   105.1    --      --      --      --
17    62025 CANYON      7.0000*   62  62122 CANYON F    100.00    62  1     59.2    62.0    95.5    --      --      --      --
18    62028 MORONY      100.00    62  62041 MORONY      13.800*   62  1     48.3    50.0    96.7    --      --      --      --
19    62034 BOLE        230.00    62  62035 CNRDWAPA    230.00*   62  1    252.7   402.4    62.8    --      --     100.0   252.7
20    62034 BOLE        230.00*   62  62071 GT FALLS    230.00    62  1    246.8   394.4    62.6    --      --     100.0   246.8
21    62038 BEAGLE      6.6000    62  62123 BEAGLE      100.00*   62  1     20.9    18.8   111.5    --      --      --      --
22    62042 BILGEN I    13.800*   62  62101 BILINGSX    50.000    62  1     65.4    60.0   109.1    --      --      --      --
23    62043 MONTANA1    13.800*   62  62059 MONTANA1    115.00    62  1     40.2    40.0   100.5    --      --      --      --
24    62106 HARLOWTN    100.00    62  62227 TWO DOT     100.00*   62  1     55.5    57.2    97.0    --      --      --      --
25
26
27
28    ------------------------------------------------------------------------------
29
30        PTI INTERACTIVE POWER SYSTEM SIMULATOR--PSS(tm)E    FRI, JUN 13 2008  14:44
31     2012 HS BASE CASE:  GTF=210, FP=62, GTF-3RVRS 230, NOGTF-OV
32     CTBWIND=100, VALWIND=104, HIGHWD=268, MCDC=195EW, CRO=46NS
33
34     BUSES WITH VOLTAGE GREATER THAN 1.0500:
35
36       BUS# X-- NAME --X BASKV AREA  V(PU)  V(KV)      BUS# X-- NAME --X BASKV AREA  V(PU)  V(KV)
37       2031 FAIRFILD    69.000   62 1.0633 73.367      3189 IVANHOE     2.4000   62 1.0665  2.560
38       9052 THFALLPM    50.000   62 1.0565 52.823      9070 FLODINLM    50.000   62 1.0545 52.726
39       9913 THFAPT*1    2.4000   62 1.0658  2.558      9914 THFAPTT1    2.4000   62 1.0593  2.542
40      62012 TOWN2       500.00   62 1.0942 547.08     62013 TOWN1       500.00   62 1.0942 547.08
41      62025 CANYON      7.0000   62 1.1052  7.736     62046 BROADVU     500.00   62 1.0751 537.54
42      62053 BROADV&2    500.00   62 1.0648 532.39     62054 BROADV&1    500.00   62 1.0653 532.64
43      62057 COLSTRP     500.00   62 1.0800 540.00     62501 SOUTHERN    18.000   62 1.0713 19.284
44      62821 LIGNITE     230.00   62 1.0749 247.22     90106 JG_CLR      0.5750   62 1.0539  0.606
45
46
47     BUSES WITH VOLTAGE LESS THAN 0.9500:
48
49       BUS# X-- NAME --X BASKV AREA  V(PU)  V(KV)      BUS# X-- NAME --X BASKV AREA  V(PU)  V(KV)
50       1043 DARNUTZR    69.000   62 0.9449 65.195      1044 SHERIDAN    69.000   62 0.9425 65.033
51       1045 TWINBRDG    50.000   62 0.9342 46.710      1046 VICTORIA    50.000   62 0.9416 47.082
52       1060 SILVER-R    50.000   62 0.9416 47.080      1067 E BENCH     69.000   62 0.9494 65.506
53       1069 PONTROCK    69.000   62 0.9379 64.718      1102 ASIMI 2     13.800   62 0.9347 12.899
54       3091 MUSLSHLL    50.000   62 0.9447 47.236      3092 MTSTMINE    50.000   62 0.9386 46.928
55       3093 MELSTONE    50.000   62 0.9328 46.642      3192 MTNSTATP    50.000   62 0.9388 46.939
56       5094 MCCONE-R    50.000   62 0.8924 44.621      5154 PTRSNFLT    69.000   62 0.9443 65.159
57       5412 GRASRANG    50.000   62 0.8866 44.328      5413 WNTT JCT    50.000   62 0.9338 46.690
58       5414 WINETT-R    50.000   62 0.8974 44.869      5417 MCCONE T    50.000   62 0.8976 44.881
```

59	5418	BOXLDR-R	50.000	62	0.8924	44.621	6010	MADSNVAL	69.000	62	0.9423	65.022
60	6021	MANHATEN	50.000	62	0.9492	47.462	6072	MOUNTVIL	69.000	62	0.9358	64.569
61	6080	ENNIS	69.000	62	0.9444	65.161	6181	ENNIS AT	69.000	62	0.9456	65.249
62	9531	MILTWNGN	2.3000	62	0.9296	2.138	62264	CONLIM T	100.00	62	0.9459	94.594
63	62265	TOWNSEND	100.00	62	0.9445	94.450	62266	TOSTON	100.00	62	0.9478	94.777
64	62271	CONTLIME	100.00	62	0.9453	94.529	62272	TOSTON-R	100.00	62	0.9478	94.777
65	62273	TOWNSD-R	100.00	62	0.9445	94.450						

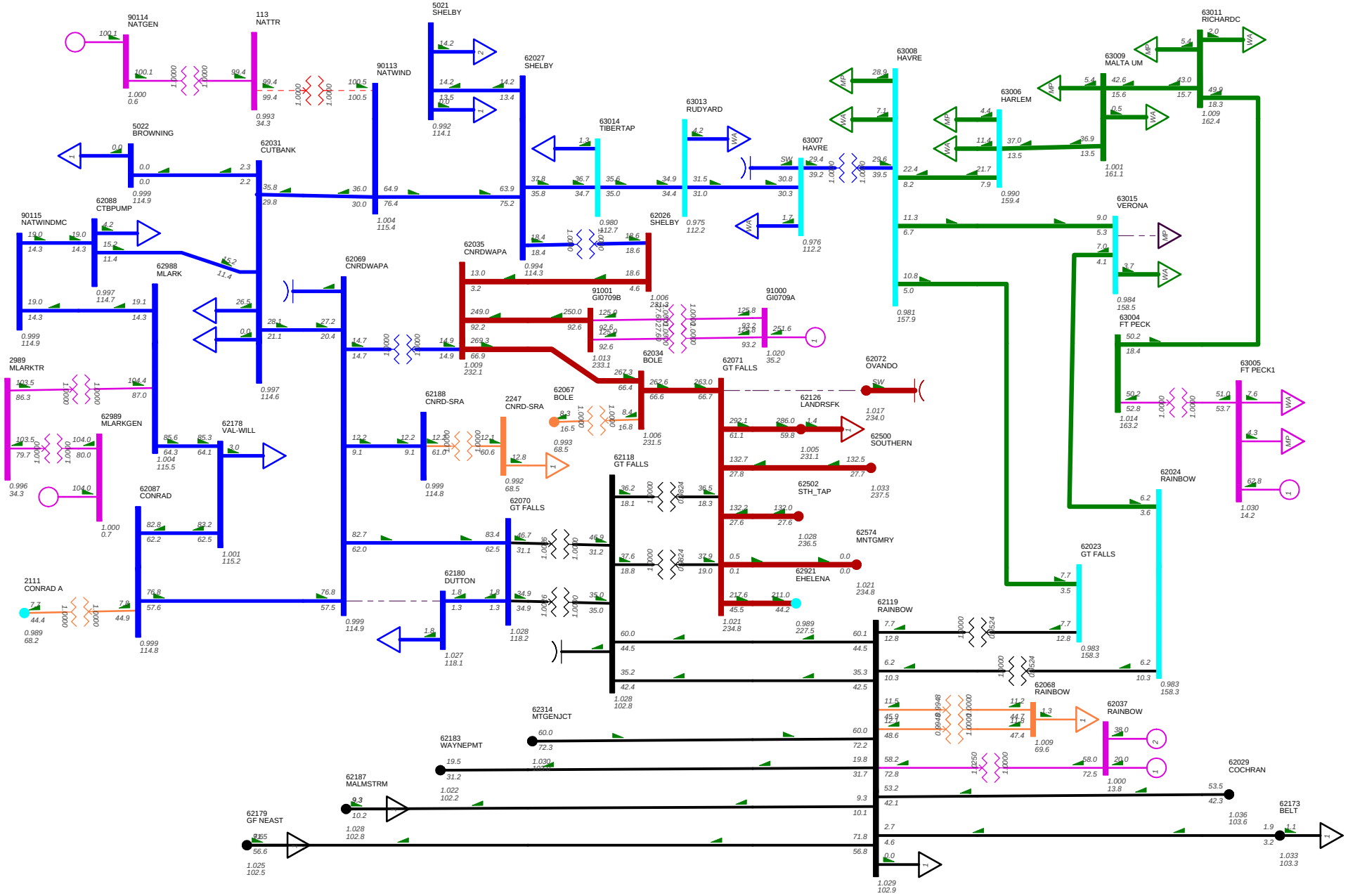

2012 HS BASE CASE: GTF=210, FP=62, GTF-3RVRS 230, NOGTF-OV
CTBWIND=100, VALWIND=104, HIGHWD=268, MCDC=195EW, CRO=46NS
FRI, JUN 13 2008 14:56
CONWIND=250 MW (N-1: CON-DUT 115kV)

Bus - VOLTAGE (kV/PU)
Branch - MVA/% OF RATE A
Equipment - MVA

100.0%RATEA
0.990UV
1.040OV

kV: <=50.000 <=69.000 <=100.000 <=115.000
<=161.000 <=230.000 <=500.000 >500.000

```
 1
 2
 3  ------------------------------------------------------------------------------
 4
 5      PTI INTERACTIVE POWER SYSTEM SIMULATOR--PSS(tm)E    TUE, JUN 10 2008  15:42
 6   2012 HS BASE CASE:  GTF=210, FP=62, GTF-3RVRS 230, NOGTF-OV
 7   CTBWIND=100, VALWIND=104, HIGHWD=268, MCDC=195EW, CRO=46NS
 8                          OUTPUT FOR AREA 62 [MONTANA     ]
 9   BRANCH LOADINGS ABOVE  95.0 % OF RATING (MVA FOR TRANSFORMERS, CURRENT FOR NON-TRANSFORMER BRANCHES):
10
11   X--------- FROM BUS ----------X X---------- TO BUS -----------X               RATING SET A    RATING SET B    RATING SET C
12     BUS# X-- NAME --X BASKV  AREA   BUS# X-- NAME --X BASKV  AREA CKT LOADING  RATING PERCENT  RATING PERCENT  RATING PERCENT
13      107 KENFIELD    34.500*   62  90107 KFIELDGEN   0.5750    62  1     21.6    22.8    95.2    --      --      --      --
14      113 NATTR       34.500    62  90113 NATWIND     115.00*   62  1    100.5   100.0   100.5    --      --      --      --
15     3095 SUMATRA     69.000*   62  62584 SUMATRA     34.500    62  1     45.3    46.7    97.0    --      --      --      --
16    62011 HOLTER      6.6000*   62  62120 HOLTER      100.00    62  1     50.4    48.0   105.1    --      --      --      --
17    62025 CANYON      7.0000*   62  62122 CANYON F    100.00    62  1     59.2    62.0    95.5    --      --      --      --
18    62028 MORONY      100.00    62  62041 MORONY      13.800*   62  1     48.2    50.0    96.4    --      --      --      --
19    62034 BOLE        230.00    62  62035 CNRDWAPA    230.00*   62  1    266.8   402.4    66.3    --      --     100.0   266.8
20    62034 BOLE        230.00*   62  62071 GT FALLS    230.00    62  1    260.9   394.4    66.2    --      --     100.0   260.9
21    62038 BEAGLE      6.6000    62  62123 BEAGLE      100.00*   62  1     21.1    18.8   112.4    --      --      --      --
22    62042 BILGEN I    13.800*   62  62101 BILINGSX    50.000    62  1     65.4    60.0   109.1    --      --      --      --
23    62043 MONTANA1    13.800*   62  62059 MONTANA1    115.00    62  1     40.2    40.0   100.5    --      --      --      --
24    62106 HARLOWTN    100.00    62  62227 TWO DOT     100.00*   62  1     55.4    57.2    96.8    --      --      --      --
25
26
27
28    ------------------------------------------------------------------------------
29
30        PTI INTERACTIVE POWER SYSTEM SIMULATOR--PSS(tm)E    TUE, JUN 10 2008  15:42
31     2012 HS BASE CASE:  GTF=210, FP=62, GTF-3RVRS 230, NOGTF-OV
32     CTBWIND=100, VALWIND=104, HIGHWD=268, MCDC=195EW, CRO=46NS
33
34     BUSES WITH VOLTAGE GREATER THAN 1.0500:
35
36       BUS# X-- NAME --X BASKV AREA  V(PU)  V(KV)      BUS# X-- NAME --X BASKV AREA  V(PU)  V(KV)
37       2031 FAIRFILD    69.000   62 1.0645 73.450      3189 IVANHOE     2.4000   62 1.0665  2.560
38       9052 THFALLPM    50.000   62 1.0565 52.823      9070 FLODINLM    50.000   62 1.0545 52.726
39       9913 THFAPT*1    2.4000   62 1.0658  2.558      9914 THFAPTT1    2.4000   62 1.0593  2.542
40      62012 TOWN2       500.00   62 1.0943 547.16     62013 TOWN1       500.00   62 1.0943 547.16
41      62025 CANYON      7.0000   62 1.1065  7.745     62046 BROADVU     500.00   62 1.0752 537.58
42      62053 BROADV&2    500.00   62 1.0649 532.45     62054 BROADV&1    500.00   62 1.0654 532.70
43      62057 COLSTRP     500.00   62 1.0800 540.00     62501 SOUTHERN    18.000   62 1.0716 19.288
44      62821 LIGNITE     230.00   62 1.0748 247.21     90106 JG_CLR      0.5750   62 1.0538  0.606
45
46
47     BUSES WITH VOLTAGE LESS THAN 0.9500:
48
49       BUS# X-- NAME --X BASKV AREA  V(PU)  V(KV)      BUS# X-- NAME --X BASKV AREA  V(PU)  V(KV)
50       1043 DARNUTZR    69.000   62 0.9454 65.232      1044 SHERIDAN    69.000   62 0.9430 65.070
51       1045 TWINBRDG    50.000   62 0.9349 46.745      1046 VICTORIA    50.000   62 0.9423 47.117
52       1060 SILVER-R    50.000   62 0.9423 47.115      1067 E BENCH     69.000   62 0.9499 65.544
53       1069 PONTROCK    69.000   62 0.9385 64.756      1102 ASIMI 2     13.800   62 0.9353 12.907
54       3091 MUSLSHLL    50.000   62 0.9449 47.244      3092 MTSTMINE    50.000   62 0.9387 46.936
55       3093 MELSTONE    50.000   62 0.9330 46.650      3192 MTNSTATP    50.000   62 0.9389 46.947
56       5094 MCCONE-R    50.000   62 0.8926 44.629      5154 PTRSNFLT    69.000   62 0.9448 65.190
57       5412 GRASRANG    50.000   62 0.8867 44.337      5413 WNTT JCT    50.000   62 0.9340 46.698
58       5414 WINETT-R    50.000   62 0.8976 44.878      5417 MCCONE T    50.000   62 0.8978 44.889
```

```
59       5418 BOXLDR-R    50.000   62 0.8926 44.629      6010 MADSNVAL    69.000   62 0.9429 65.058
60       6021 MANHATEN    50.000   62 0.9500 47.499      6072 MOUNTVIL    69.000   62 0.9363 64.605
61       6080 ENNIS       69.000   62 0.9449 65.197      6181 ENNIS AT    69.000   62 0.9462 65.285
62       9531 MILTWNGN    2.3000   62 0.9299  2.139     62264 CONLIM T    100.00   62 0.9470 94.695
63      62265 TOWNSEND    100.00   62 0.9455 94.550     62266 TOSTON      100.00   62 0.9487 94.866
64      62271 CONTLIME    100.00   62 0.9463 94.630     62272 TOSTON-R    100.00   62 0.9487 94.866
65    62273 TOWNSD-R    100.00   62 0.9455 94.550
```

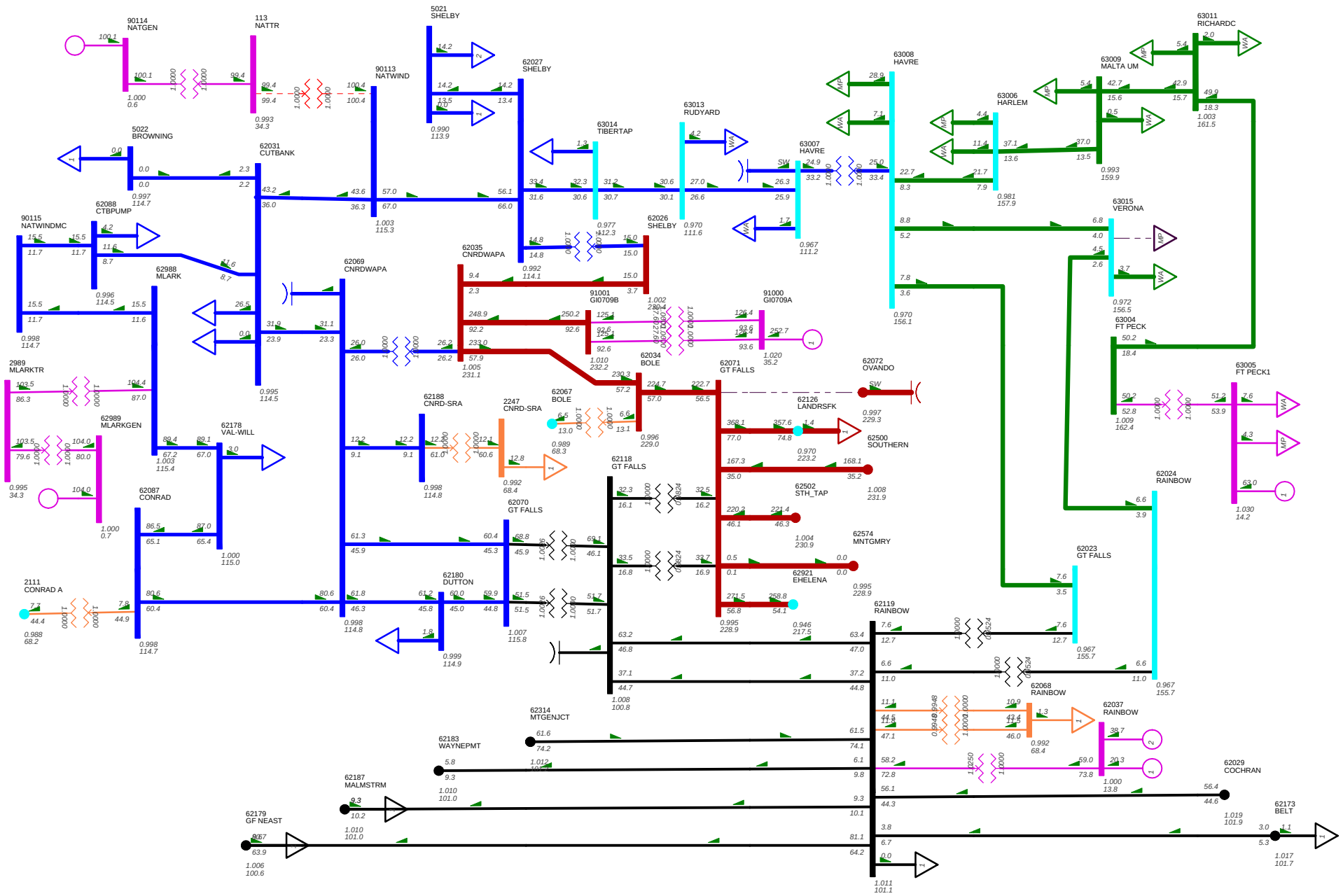

2012 HS BASE CASE: GTF=210, FP=62, GTF-3RVRS 230, NOGTF-OV
CTBWIND=100, VALWIND=104, HIGHWD=268, MCDC=195EW, CRO=46NS
FRI, JUN 13 2008 13:30
CONWIND=250 MW (N-1: BV-JG 230kV)

Bus - VOLTAGE (kV/PU)
Branch - MVA/% OF RATE A
Equipment - MVA

100.0%RATEA
0.990UV
1.040OV

kV: <=50.000 <=69.000 <=100.000 <=115.000
<=161.000 <=230.000 <=500.000 >500.000

```
 1
 2
 3  ------------------------------------------------------------------------------
 4
 5      PTI INTERACTIVE POWER SYSTEM SIMULATOR--PSS(tm)E    TUE, JUN 10 2008  16:50
 6   2012 HS BASE CASE:  GTF=210, FP=62, GTF-3RVRS 230, NOGTF-OV
 7   CTBWIND=100, VALWIND=104, HIGHWD=268, MCDC=195EW, CRO=46NS
 8                          OUTPUT FOR AREA 62 [MONTANA     ]
 9   BRANCH LOADINGS ABOVE  95.0 % OF RATING (MVA FOR TRANSFORMERS, CURRENT FOR NON-TRANSFORMER BRANCHES):
10
11   X--------- FROM BUS ----------X X---------- TO BUS -----------X              RATING SET A    RATING SET B    RATING SET C
12     BUS# X-- NAME --X BASKV  AREA   BUS# X-- NAME --X BASKV  AREA CKT LOADING  RATING PERCENT  RATING PERCENT  RATING PERCENT
13      113 NATTR       34.500    62  90113 NATWIND     115.00*   62  1    100.4   100.0   100.4    --      --      --      --
14     3095 SUMATRA     69.000*   62  62584 SUMATRA     34.500    62  1     45.1    46.7    96.5    --      --      --      --
15    62011 HOLTER      6.6000*   62  62120 HOLTER      100.00    62  1     50.4    48.0   105.1    --      --      --      --
16    62025 CANYON      7.0000*   62  62122 CANYON F    100.00    62  1     59.2    62.0    95.5    --      --      --      --
17    62028 MORONY      100.00    62  62041 MORONY      13.800*   62  1     50.2    50.0   100.4    --      --      --      --
18    62029 COCHRAN     100.00    62  62040 COCHRAN     13.800*   62  1     59.9    60.0    99.8    --      --      --      --
19    62034 BOLE        230.00    62  62035 CNRDWAPA    230.00*   62  1    231.9   402.4    57.6    --      --     100.0   231.9
20    62034 BOLE        230.00*   62  62071 GT FALLS    230.00    62  1    225.7   394.4    57.2    --      --     100.0   225.7
21    62036 JUDITHGP    230.00    62  62104 JUDITHGP    100.00*   62  1    100.3   100.0   100.3    --      --      --      --
22    62038 BEAGLE      6.6000    62  62123 BEAGLE      100.00*   62  1     19.2    18.8   102.3    --      --      --      --
23    62042 BILGEN I    13.800*   62  62101 BILINGSX    50.000    62  1     65.5    60.0   109.2    --      --      --      --
24    62043 MONTANA1    13.800*   62  62059 MONTANA1    115.00    62  1     40.2    40.0   100.5    --      --      --      --
25    62089 BROADVU     100.00    62  62106 HARLOWTN    100.00*   62  1     63.2    62.3   101.5    --      --      --      --
26    62104 JUDITHGP    100.00*   62  62233 JUDITGPT    100.00    62  1     73.5    62.4   117.7    --      --      --      --
27    62106 HARLOWTN    100.00*   62  62192 PANTROBE    100.00    62  1     61.4    62.0    99.1    --      --      --      --
28    62106 HARLOWTN    100.00    62  62233 JUDITGPT    100.00*   62  1     71.5    62.0   115.3    --      --      --      --
29    62121 E HELENA    100.00*   62  62264 CONLIM T    100.00    62  1     54.9    57.2    96.0    --      --      --      --
30
31
32
33    ------------------------------------------------------------------------------
34
35        PTI INTERACTIVE POWER SYSTEM SIMULATOR--PSS(tm)E    TUE, JUN 10 2008  16:50
36     2012 HS BASE CASE:  GTF=210, FP=62, GTF-3RVRS 230, NOGTF-OV
37     CTBWIND=100, VALWIND=104, HIGHWD=268, MCDC=195EW, CRO=46NS
38
39     BUSES WITH VOLTAGE GREATER THAN 1.0500:
40
41       BUS# X-- NAME --X BASKV AREA  V(PU)  V(KV)      BUS# X-- NAME --X BASKV AREA  V(PU)  V(KV)
42       3189 IVANHOE     2.4000   62 1.0609  2.546      9052 THFALLPM    50.000   62 1.0565 52.823
43       9070 FLODINLM    50.000   62 1.0545 52.726      9913 THFAPT*1    2.4000   62 1.0658  2.558
44       9914 THFAPTT1    2.4000   62 1.0593  2.542     62012 TOWN2       500.00   62 1.0886 544.28
45      62013 TOWN1       500.00   62 1.0886 544.28     62025 CANYON      7.0000   62 1.0580  7.406
46      62046 BROADVU     500.00   62 1.0730 536.48     62053 BROADV&2    500.00   62 1.0616 530.79
47      62054 BROADV&1    500.00   62 1.0620 531.02     62057 COLSTRP     500.00   62 1.0800 540.00
48      62821 LIGNITE     230.00   62 1.0755 247.37     90106 JG_CLR      0.5750   62 1.0525  0.605
49
50
51     BUSES WITH VOLTAGE LESS THAN 0.9500:
52
53       BUS# X-- NAME --X BASKV AREA  V(PU)  V(KV)      BUS# X-- NAME --X BASKV AREA  V(PU)  V(KV)
54       1030 MONT ST     69.000   62 0.9491 65.487      1031 DIVIDE      69.000   62 0.9457 65.256
55       1032 FEELYHIL    69.000   62 0.9472 65.357      1033 BUTTE WC    69.000   62 0.9457 65.256
56       1041 BANN MTR    69.000   62 0.9486 65.456      1042 DILLON T    69.000   62 0.9420 64.996
57       1043 DARNUTZR    69.000   62 0.9238 63.743      1044 SHERIDAN    69.000   62 0.9214 63.578
58       1045 TWINBRDG    50.000   62 0.9038 45.192      1046 VICTORIA    50.000   62 0.9115 45.577
```

59	1047	RENOVA	50.000	62	0.9455	47.273	1048	WHITHALL	50.000	62	0.9240	46.200
60	1053	DELL-R	161.00	62	0.9432	151.85	1056	BANNACK	69.000	62	0.9487	65.461
61	1057	BANACK-R	69.000	62	0.9476	65.384	1058	DILLON-R	69.000	62	0.9417	64.977
62	1059	DILLONRT	69.000	62	0.9421	65.006	1060	SILVER-R	50.000	62	0.9115	45.576
63	1061	WHTHAL-R	50.000	62	0.9221	46.104	1062	DILLON	69.000	62	0.9419	64.994
64	1063	DILONAIR	69.000	62	0.9353	64.536	1065	STONE CR	69.000	62	0.9293	64.123
65	1066	STN CK T	69.000	62	0.9308	64.228	1067	E BENCH	69.000	62	0.9284	64.062
66	1069	PONTROCK	69.000	62	0.9167	63.255	1090	VIRGCITY	69.000	62	0.9383	64.743
67	1101	ASIMI 1	13.800	62	0.9456	13.050	1102	ASIMI 2	13.800	62	0.9155	12.634
68	1103	ASIMI 3	13.800	62	0.9445	13.034	1104	ASIMI 4	13.800	62	0.9461	13.056
69	1112	BRTSMNRT	69.000	62	0.9389	64.781	1113	BRTSMNRL	69.000	62	0.9385	64.755
70	1141	BANNACKT	69.000	62	0.9487	65.461	1144	LAURIN	69.000	62	0.9387	64.770
71	1160	WHTHLL T	50.000	62	0.9455	47.273	1161	WHTHL-RT	50.000	62	0.9248	46.239
72	3085	RNDUPPMT	50.000	62	0.9465	47.325	3086	ROUNDUP	50.000	62	0.9492	47.460
73	3090	GAGE	50.000	62	0.9348	46.742	3091	MUSLSHLL	50.000	62	0.9195	45.974
74	3092	MTSTMINE	50.000	62	0.9131	45.656	3093	MELSTONE	50.000	62	0.9072	45.362
75	3185	RONDUPPM	50.000	62	0.9444	47.222	3192	MTNSTATP	50.000	62	0.9134	45.668
76	3286	ROUNDUP	69.000	62	0.9417	64.977	5094	MCCONE-R	50.000	62	0.8649	43.243
77	5110	BARRETTS	69.000	62	0.9411	64.934	5112	CARLSON	69.000	62	0.9385	64.759
78	5113	PTRSEN-R	69.000	62	0.9389	64.782	5154	PTRSNFLT	69.000	62	0.9344	64.476
79	5412	GRASRANG	50.000	62	0.8588	42.938	5413	WNTT JCT	50.000	62	0.9079	45.394
80	5414	WINETT-R	50.000	62	0.8700	43.500	5415	RONDUP-R	50.000	62	0.9449	47.243
81	5417	MCCONE T	50.000	62	0.8702	43.512	5418	BOXLDR-R	50.000	62	0.8649	43.243
82	5420	SORNDP-R	50.000	62	0.9497	47.485	5421	MERIDIAN	50.000	62	0.9498	47.489
83	6010	MADSNVAL	69.000	62	0.9205	63.515	6020	POYNTER	50.000	62	0.9407	47.037
84	6021	MANHATEN	50.000	62	0.9156	45.782	6072	MOUNTVIL	69.000	62	0.9138	63.052
85	6080	ENNIS	69.000	62	0.9226	63.662	6181	ENNIS AT	69.000	62	0.9240	63.753
86	7019	BOULDERA	69.000	62	0.9144	63.097	7020	BOULDERB	69.000	62	0.9144	63.097
87	7023	ELKHORN	69.000	62	0.9118	62.917	7029	JEFRSNSM	69.000	62	0.9160	63.206
88	7061	BOULDRAT	69.000	62	0.9160	63.201	7065	BOULDTIE	69.000	62	0.9159	63.198
89	9531	MILTWNGN	2.3000	62	0.9282	2.135	62011	HOLTER	6.6000	62	0.9472	6.252
90	62020	TRIDENT	50.000	62	0.9491	47.454	62021	THREERIV	100.00	62	0.9352	93.519
91	62022	MADISON	100.00	62	0.9474	94.737	62030	PTRSNFLT	230.00	62	0.9430	216.89
92	62073	TRIDENT	100.00	62	0.9317	93.171	62105	BRADLEYC	100.00	62	0.9445	94.452
93	62116	BUTTE MT	100.00	62	0.9451	94.513	62117	GOLD CR	100.00	62	0.9492	94.924
94	62131	DERLDG T	100.00	62	0.9492	94.924	62133	DRLDGCTY	100.00	62	0.9443	94.430
95	62134	DRLDG CM	100.00	62	0.9474	94.744	62136	BUTECRSH	100.00	62	0.9426	94.261
96	62137	BUTECORA	100.00	62	0.9423	94.232	62138	PCIFICST	100.00	62	0.9432	94.317
97	62139	MONST TP	100.00	62	0.9427	94.266	62140	BUT CONC	100.00	62	0.9426	94.259
98	62141	MONT ST	100.00	62	0.9429	94.286	62142	TAILBOOS	100.00	62	0.9427	94.266
99	62143	RAMSAYPM	100.00	62	0.9477	94.769	62144	TAILBOS2	100.00	62	0.9416	94.159
100	62145	RENOVA	100.00	62	0.9312	93.118	62148	PRECIPIT	100.00	62	0.9419	94.189
101	62149	BARGE PM	100.00	62	0.9411	94.112	62150	CONDR TA	100.00	62	0.9435	94.353
102	62151	CONDR TB	100.00	62	0.9428	94.282	62152	BTMINDPK	100.00	62	0.9438	94.383
103	62153	CONTDRVE	100.00	62	0.9426	94.256	62155	MAYFLWRT	100.00	62	0.9336	93.360
104	62156	MAYFLWRM	100.00	62	0.9336	93.359	62244	EUSTIS	100.00	62	0.9269	92.692
105	62245	COBLSTON	100.00	62	0.9350	93.499	62247	TRIDTPLT	100.00	62	0.9314	93.144
106	62248	THREFORK	100.00	62	0.9314	93.145	62251	HAR-PONY	100.00	62	0.9385	93.850
107	62252	WILLWCKM	100.00	62	0.9308	93.084	62253	MONTTALC	100.00	62	0.9305	93.047
108	62254	COBLSTNT	100.00	62	0.9351	93.506	62259	BASINMT	100.00	62	0.9350	93.499
109	62263	GILBERT	100.00	62	0.9471	94.709	62264	CONLIM T	100.00	62	0.9024	90.243
110	62265	TOWNSEND	100.00	62	0.9012	90.117	62266	TOSTON	100.00	62	0.9086	90.865
111	62267	CROWCREK	100.00	62	0.9146	91.459	62271	CONTLIME	100.00	62	0.9017	90.174
112	62272	TOSTON-R	100.00	62	0.9086	90.865	62273	TOWNSD-R	100.00	62	0.9012	90.117
113	62275	HELSS TA	100.00	62	0.9483	94.827	62276	HELSS TB	100.00	62	0.9475	94.753
114	62277	HELENASS	100.00	62	0.9467	94.670	62278	MTTUNTAP	100.00	62	0.9404	94.037
115	62279	MTTUNTPA	100.00	62	0.9362	93.625	62280	MTTUNTIE	100.00	62	0.9362	93.625
116	62283	MTTUNELS	100.00	62	0.9355	93.555	62284	CLANCYTB	100.00	62	0.9437	94.375

117	62285	CLANCYTA	100.00	62	0.9422	94.220	62286	BRDWTR T	100.00	62	0.9125	91.246
118	62287	CLNCYTIE	100.00	62	0.9437	94.375	62288	BRODWATR	100.00	62	0.9138	91.384
119	62289	CLANCY	100.00	62	0.9437	94.374	62315	BOULDRAT	100.00	62	0.9345	93.453
120	62327	BOULDRTA	100.00	62	0.9349	93.494	62328	BOULDRTB	100.00	62	0.9385	93.849
121	62329	BOULDTIE	100.00	62	0.9349	93.494	62345	DIL-SALM	69.000	62	0.9489	65.477
122	62346	SHERAT 2	69.000	62	0.9409	64.921	62550	DILSAL-C	69.000	62	0.9489	65.477
123	62921	EHELENA	230.00	62	0.9456	217.49						

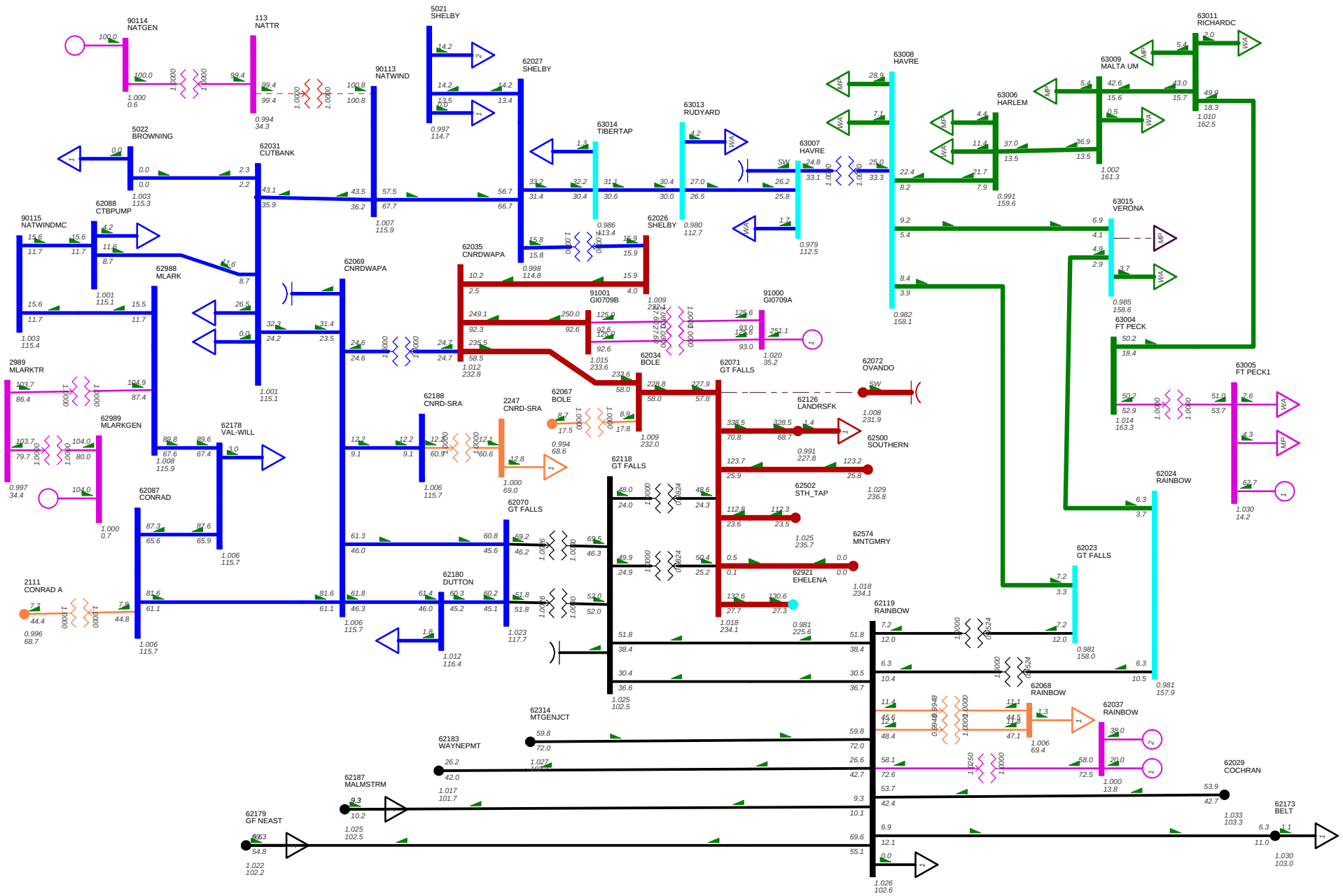

2012 HS BASE CASE: GTF=210, FP=62, GTF-3RVRS 230, NOGTF-OV
CTBWIND=100, VALWIND=104, HIGHWD=268, MCDC=195EW, CRO=46NS
FRI, JUN 13 2008 13:22
CONWIND=250 MW (N-1: EH-3R 230kV)

Bus - VOLTAGE (kV/PU)
Branch - MVA/% OF RATE A
Equipment - MVA

100.0%RATEA
0.990UV
1.040OV

kV: <=50.000 <=69.000 <=100.000 <=115.000
<=161.000 <=230.000 <=500.000 >500.000

```
 1
 2
 3  ------------------------------------------------------------------------------
 4
 5      PTI INTERACTIVE POWER SYSTEM SIMULATOR--PSS(tm)E    FRI, JUN 13 2008  12:27
 6   2012 HS BASE CASE:  GTF=210, FP=62, GTF-3RVRS 230, NOGTF-OV
 7   CTBWIND=100, VALWIND=104, HIGHWD=268, MCDC=195EW, CRO=46NS
 8                          OUTPUT FOR AREA 62 [MONTANA     ]
 9   BRANCH LOADINGS ABOVE  95.0 % OF RATING (MVA FOR TRANSFORMERS, CURRENT FOR NON-TRANSFORMER BRANCHES):
10
11   X--------- FROM BUS ----------X X---------- TO BUS -----------X               RATING SET A    RATING SET B    RATING SET C
12     BUS# X-- NAME --X BASKV  AREA   BUS# X-- NAME --X BASKV  AREA CKT LOADING  RATING PERCENT  RATING PERCENT  RATING PERCENT
13      106 JGW_TRAN    34.500*   62  90105 JGWIND      230.00    62  1    190.0   200.0    95.0    --      --      --      --
14      113 NATTR       34.500    62  90113 NATWIND     115.00*   62  1    100.8   100.0   100.8    --      --      --      --
15     3095 SUMATRA     69.000*   62  62584 SUMATRA     34.500    62  1     45.2    46.7    96.9    --      --      --      --
16    62011 HOLTER      6.6000*   62  62120 HOLTER      100.00    62  1     50.4    48.0   105.1    --      --      --      --
17    62025 CANYON      7.0000*   62  62122 CANYON F    100.00    62  1     59.2    62.0    95.5    --      --      --      --
18    62028 MORONY      100.00    62  62041 MORONY      13.800*   62  1     48.5    50.0    97.0    --      --      --      --
19    62034 BOLE        230.00    62  62035 CNRDWAPA    230.00*   62  1    232.7   402.4    57.8    --      --     100.0   232.7
20    62034 BOLE        230.00*   62  62071 GT FALLS    230.00    62  1    226.9   394.4    57.5    --      --     100.0   226.9
21    62038 BEAGLE      6.6000    62  62123 BEAGLE      100.00*   62  1     20.7    18.8   110.3    --      --      --      --
22    62042 BILGEN I    13.800*   62  62101 BILINGSX    50.000    62  1     65.4    60.0   109.1    --      --      --      --
23    62043 MONTANA1    13.800*   62  62059 MONTANA1    115.00    62  1     40.2    40.0   100.5    --      --      --      --
24    62106 HARLOWTN    100.00    62  62227 TWO DOT     100.00*   62  1     60.2    57.2   105.2    --      --      --      --
25    62121 E HELENA    100.00*   62  62264 CONLIM T    100.00    62  1     70.3    57.2   122.9    --      --      --      --
26    62121 E HELENA    100.00*   62  62276 HELSS TB    100.00    62  1     91.2    91.8    99.3    --      --      --      --
27    62121 E HELENA    100.00    62  62921 EHELENA     230.00*   62  1    130.6   100.0   130.6    --      --      --      --
28    62137 BUTECORA    100.00*   62  62139 MONST TP    100.00    62  1    107.4    91.8   117.0    --      --      --      --
29    62227 TWO DOT     100.00    62  62235 MARTNSDA    100.00*   62  1     54.7    57.2    95.7    --      --      --      --
30    62264 CONLIM T    100.00*   62  62265 TOWNSEND    100.00    62  1     68.5    57.2   119.8    --      --      --      --
31
32
33
34    ------------------------------------------------------------------------------
35
36        PTI INTERACTIVE POWER SYSTEM SIMULATOR--PSS(tm)E    FRI, JUN 13 2008  12:29
37     2012 HS BASE CASE:  GTF=210, FP=62, GTF-3RVRS 230, NOGTF-OV
38     CTBWIND=100, VALWIND=104, HIGHWD=268, MCDC=195EW, CRO=46NS
39
40     BUSES WITH VOLTAGE GREATER THAN 1.0500:
41
42       BUS# X-- NAME --X BASKV AREA  V(PU)  V(KV)      BUS# X-- NAME --X BASKV AREA  V(PU)  V(KV)
43       2031 FAIRFILD    69.000   62 1.0617 73.257      3189 IVANHOE     2.4000   62 1.0653  2.557
44       9052 THFALLPM    50.000   62 1.0565 52.823      9070 FLODINLM    50.000   62 1.0545 52.726
45       9913 THFAPT*1    2.4000   62 1.0658  2.558      9914 THFAPTT1    2.4000   62 1.0593  2.542
46      62012 TOWN2       500.00   62 1.0911 545.56     62013 TOWN1       500.00   62 1.0911 545.56
47      62025 CANYON      7.0000   62 1.1012  7.709     62046 BROADVU     500.00   62 1.0735 536.76
48      62053 BROADV&2    500.00   62 1.0624 531.22     62054 BROADV&1    500.00   62 1.0629 531.45
49      62057 COLSTRP     500.00   62 1.0800 540.00     62501 SOUTHERN    18.000   62 1.0683 19.230
50      62821 LIGNITE     230.00   62 1.0754 247.34     90106 JG_CLR      0.5750   62 1.0568  0.608
51
52
53     BUSES WITH VOLTAGE LESS THAN 0.9500:
54
55       BUS# X-- NAME --X BASKV AREA  V(PU)  V(KV)      BUS# X-- NAME --X BASKV AREA  V(PU)  V(KV)
56       1043 DARNUTZR    69.000   62 0.9369 64.649      1044 SHERIDAN    69.000   62 0.9347 64.492
57       1045 TWINBRDG    50.000   62 0.9127 45.635      1046 VICTORIA    50.000   62 0.9203 46.017
58       1048 WHITHALL    50.000   62 0.9326 46.632      1060 SILVER-R    50.000   62 0.9203 46.015
```

59	1061	WHTHAL-R	50.000	62	0.9307	46.537	1063	DILONAIR	69.000	62	0.9481	65.416
60	1065	STONE CR	69.000	62	0.9422	65.014	1066	STN CK T	69.000	62	0.9437	65.118
61	1067	E BENCH	69.000	62	0.9414	64.957	1069	PONTROCK	69.000	62	0.9300	64.168
62	1102	ASIMI 2	13.800	62	0.9262	12.782	1161	WHTHL-RT	50.000	62	0.9334	46.671
63	3091	MUSLSHLL	50.000	62	0.9394	46.970	3092	MTSTMINE	50.000	62	0.9332	46.661
64	3093	MELSTONE	50.000	62	0.9275	46.373	3192	MTNSTATP	50.000	62	0.9334	46.672
65	5094	MCCONE-R	50.000	62	0.8866	44.331	5154	PTRSNFLT	69.000	62	0.9452	65.218
66	5410	WINIFRED	50.000	62	0.9480	47.401	5412	GRASRANG	50.000	62	0.8807	44.036
67	5413	WNTT JCT	50.000	62	0.9284	46.418	5414	WINETT-R	50.000	62	0.8916	44.582
68	5417	MCCONE T	50.000	62	0.8919	44.594	5418	BOXLDR-R	50.000	62	0.8866	44.331
69	6010	MADSNVAL	69.000	62	0.9340	64.443	6020	POYNTER	50.000	62	0.9473	47.364
70	6021	MANHATEN	50.000	62	0.9224	46.119	6072	MOUNTVIL	69.000	62	0.9273	63.986
71	6080	ENNIS	69.000	62	0.9360	64.585	6181	ENNIS AT	69.000	62	0.9373	64.674
72	7019	BOULDERA	69.000	62	0.9366	64.623	7020	BOULDERB	69.000	62	0.9366	64.623
73	7023	ELKHORN	69.000	62	0.9340	64.448	7029	JEFRSNSM	69.000	62	0.9381	64.729
74	7061	BOULDRAT	69.000	62	0.9380	64.724	7065	BOULDTIE	69.000	62	0.9380	64.721
75	9531	MILTWNGN	2.3000	62	0.9261	2.130	62021	THREERIV	100.00	62	0.9414	94.141
76	62073	TRIDENT	100.00	62	0.9380	93.797	62145	RENOVA	100.00	62	0.9393	93.928
77	62155	MAYFLWRT	100.00	62	0.9417	94.167	62156	MAYFLWRM	100.00	62	0.9417	94.166
78	62244	EUSTIS	100.00	62	0.9337	93.368	62245	COBLSTON	100.00	62	0.9420	94.204
79	62247	TRIDTPLT	100.00	62	0.9377	93.770	62248	THREFORK	100.00	62	0.9382	93.816
80	62251	HAR-PONY	100.00	62	0.9465	94.651	62252	WILLWCKM	100.00	62	0.9377	93.770
81	62253	MONTTALC	100.00	62	0.9376	93.759	62254	COBLSTNT	100.00	62	0.9421	94.211
82	62264	CONLIM T	100.00	62	0.9192	91.919	62265	TOWNSEND	100.00	62	0.9173	91.729
83	62266	TOSTON	100.00	62	0.9192	91.920	62267	CROWCREK	100.00	62	0.9237	92.370
84	62271	CONTLIME	100.00	62	0.9185	91.851	62272	TOSTON-R	100.00	62	0.9192	91.920
85	62273	TOWNSD-R	100.00	62	0.9173	91.729	62286	BRDWTR T	100.00	62	0.9222	92.220
86	62288	BRODWATR	100.00	62	0.9236	92.356						

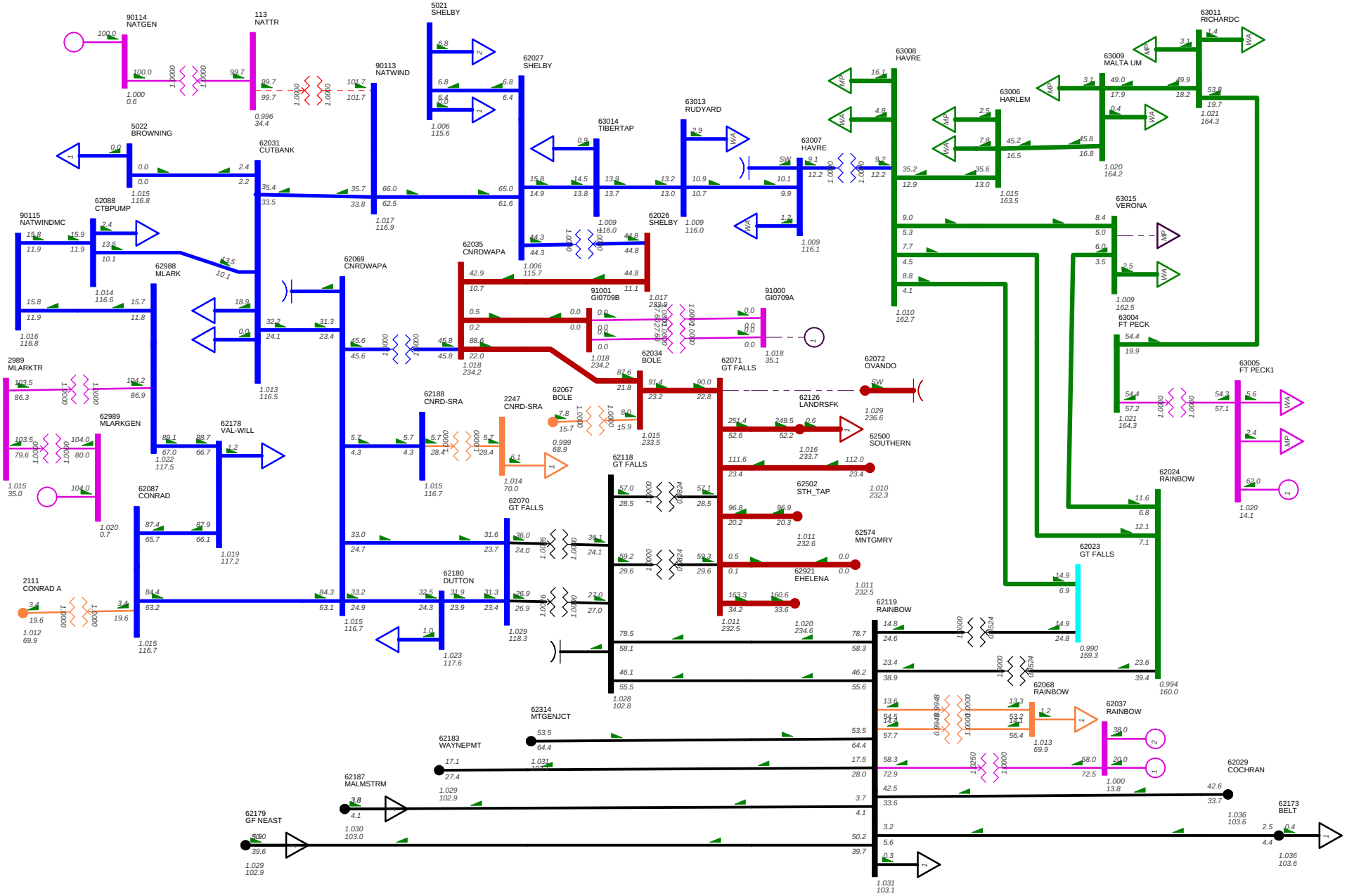

2010 LA BASE CASE: GTF=170, FP=62, GTF-3RVRS 230, NOGTF-OV
CTBWIND=100, VALWIND=104, HIGHWD=268, MCDC=150EW, CRO=77NS
SAT, JUN 14 2008 9:29
CONWIND=0 MW (N-0)

Bus - VOLTAGE (kV/PU)
Branch - MVA/% OF RATE A
Equipment - MVA

100.0%RATEA
0.990UV
1.040OV

kV: <=50.000 <=69.000 <=100.000 <=115.000
<=161.000 <=230.000 <=500.000 >500.000

```
 1
 2
 3  ------------------------------------------------------------------------------
 4
 5      PTI INTERACTIVE POWER SYSTEM SIMULATOR--PSS(tm)E    FRI, JUN 13 2008  18:50
 6   2010 LA BASE CASE:  GTF=170, FP=62, GTF-3RVRS 230, NOGTF-OV
 7   CTBWIND=100, VALWIND=104, HIGHWD=268, MCDC=150EW, CRO=77NS
 8                          OUTPUT FOR AREA 62 [MONTANA     ]
 9   BRANCH LOADINGS ABOVE  95.0 % OF RATING (MVA FOR TRANSFORMERS, CURRENT FOR NON-TRANSFORMER BRANCHES):
10
11   X--------- FROM BUS ----------X X---------- TO BUS -----------X               RATING SET A    RATING SET B    RATING SET C
12     BUS# X-- NAME --X BASKV  AREA   BUS# X-- NAME --X BASKV  AREA CKT LOADING  RATING PERCENT  RATING PERCENT  RATING PERCENT
13      107 KENFIELD    34.500*   62  90107 KFIELDGEN   0.5750    62  1     22.0    22.8    96.5    --      --      --      --
14      113 NATTR       34.500    62  90113 NATWIND     115.00*   62  1    101.7   100.0   101.7    --      --      --      --
15     3095 SUMATRA     69.000*   62  62584 SUMATRA     34.500    62  1     45.5    46.7    97.4    --      --      --      --
16    62011 HOLTER      6.6000    62  62120 HOLTER      100.00*   62  1     49.0    48.0   102.1    --      --      --      --
17    62042 BILGEN I    13.800*   62  62101 BILINGSX    50.000    62  1     65.2    60.0   108.7    --      --      --      --
18    62043 MONTANA1    13.800    62  62059 MONTANA1    115.00*   62  1     40.2    40.0   100.5    --      --      --      --
19    62106 HARLOWTN    100.00    62  62227 TWO DOT     100.00*   62  1     58.1    57.2   101.6    --      --      --      --
20
21
22
23    ------------------------------------------------------------------------------
24
25        PTI INTERACTIVE POWER SYSTEM SIMULATOR--PSS(tm)E    FRI, JUN 13 2008  18:50
26     2010 LA BASE CASE:  GTF=170, FP=62, GTF-3RVRS 230, NOGTF-OV
27     CTBWIND=100, VALWIND=104, HIGHWD=268, MCDC=150EW, CRO=77NS
28
29     BUSES WITH VOLTAGE GREATER THAN 1.0500:
30
31       BUS# X-- NAME --X BASKV AREA  V(PU)  V(KV)      BUS# X-- NAME --X BASKV AREA  V(PU)  V(KV)
32       1053 DELL-R      161.00   62 1.0747 173.03      1064 SHERIDAN    50.000   62 1.0754 53.768
33       2031 FAIRFILD    69.000   62 1.0751 74.183      3170 EXXONAUX    12.500   62 1.0516 13.145
34       3189 IVANHOE     2.4000   62 1.0692  2.566      3591 CL1&STR7    7.2000   62 1.0573  7.612
35       3977 CHROME*1    13.800   62 1.0545 14.551      3978 CHROMET1    13.800   62 1.0545 14.551
36       5007 SALMONID    69.000   62 1.0808 74.573      5027 TENDOY      69.000   62 1.0800 74.520
37       5028 LEMHI       69.000   62 1.0804 74.550      5059 DIVIDE-R    69.000   62 1.0537 72.704
38       5061 MELROSE     69.000   62 1.0545 72.759      5069 DVDE-R T    69.000   62 1.0541 72.735
39       5079 JONES-R     69.000   62 1.0543 72.749      5125 SLVR BOW    69.000   62 1.0547 72.772
40       5154 PTRSNFLT    69.000   62 1.0721 73.975      6018 MANHATNT    50.000   62 1.0634 53.169
41       6019 MANHATPM    50.000   62 1.0622 53.109      6022 BELGRADE    50.000   62 1.0649 53.245
42       6025 BOZMN SS    50.000   62 1.0746 53.732      6026 BOZMN NS    50.000   62 1.0736 53.679
43       6027 EGALNS T    50.000   62 1.0736 53.680      6029 JACKRABT    69.000   62 1.0730 74.038
44       6030 LIVIN WS    50.000   62 1.0535 52.675      6032 SOURDOUG    50.000   62 1.0734 53.672
45       6033 MTELLS-R    50.000   62 1.0732 53.662      6034 MUIR        50.000   62 1.0728 53.638
46       6035 CLYDPARK    50.000   62 1.0626 53.129      6036 LIVNGSTN    50.000   62 1.0536 52.682
47       6037 CLYDPK-R    50.000   62 1.0600 53.002      6038 LIVIN NS    50.000   62 1.0548 52.742
48       6039 LIVING-R    50.000   62 1.0536 52.682      6040 LIVNGSTN    69.000   62 1.0790 74.450
49       6043 BRAND S     69.000   62 1.0783 74.405      6048 BGTIMB-R    50.000   62 1.0568 52.840
50       6049 PINECR-R    69.000   62 1.0757 74.225      6057 SPRNGL T    50.000   62 1.0539 52.693
51       6060 SWINGLEY    50.000   62 1.0535 52.675      6061 E & W       50.000   62 1.0534 52.668
52       6062 HUNTER      50.000   62 1.0533 52.665      6063 SPRGDALE    50.000   62 1.0531 52.654
53       6065 BGTIMBER    50.000   62 1.0554 52.769      6066 MELVILLE    50.000   62 1.0568 52.840
54       6070 BGTMBERA    50.000   62 1.0589 52.945      6071 MEADWVIL    69.000   62 1.0691 73.769
55       6073 HOL PUMP    50.000   62 1.0536 52.681      6074 HAYHOOK     50.000   62 1.0604 53.021
56       6078 BZRIVERS    50.000   62 1.0686 53.428      6082 PATERSNT    50.000   62 1.0729 53.647
57       6084 PATERSON    50.000   62 1.0704 53.521      6089 WILSAL-R    50.000   62 1.0590 52.949
58       6090 DOWNER      50.000   62 1.0533 52.667      6093 HOLPUM T    50.000   62 1.0536 52.681
```

```
      6119 AMSTER T    50.000   62 1.0671 53.356      6120 AMSTRDAM    50.000   62 1.0641 53.204
      6125 BOZ SS 1    50.000   62 1.0746 53.732      6126 BOZ NS 1    50.000   62 1.0736 53.680
      6132 W SOURDH    50.000   62 1.0738 53.692      6931 EMIGRT*1    13.800   62 1.0546 14.554
      6932 EMIGRTT1    13.800   62 1.0546 14.554      9052 THFALLPM    50.000   62 1.0576 52.880
      9057 LOLO        69.000   62 1.0588 73.057      9060 MACLAY      69.000   62 1.0594 73.096
      9069 LOLO-R      69.000   62 1.0588 73.057      9070 FLODINLM    50.000   62 1.0565 52.825
      9913 THFAPT*1    2.4000   62 1.0628  2.551      9914 THFAPTT1    2.4000   62 1.0602  2.544
     62012 TOWN2       500.00   62 1.1194 559.71     62013 TOWN1       500.00   62 1.1194 559.71
     62025 CANYON      7.0000   62 1.1160  7.812     62030 PTRSNFLT    230.00   62 1.0816 248.76
     62033 ANA BPA     115.00   62 1.0547 121.29     62046 BROADVU     500.00   62 1.0865 543.26
     62053 BROADV&2    500.00   62 1.0792 539.59     62054 BROADV&1    500.00   62 1.0798 539.88
     62057 COLSTRP     500.00   62 1.0800 540.00     62075 MILLERCK    69.000   62 1.0644 73.441
     62084 DILLON S    161.00   62 1.0551 169.87     62154 RHONPOUL    100.00   62 1.0545 105.45
     62158 SHERDNMT    161.00   62 1.0530 169.53     62348 EGALLTIN    50.000   62 1.0735 53.676
     62349 JACKRABT    50.000   62 1.0713 53.566     62821 LIGNITE     230.00   62 1.0763 247.55
     90106 JG_CLR      0.5750   62 1.0546  0.606

    BUSES WITH VOLTAGE LESS THAN 0.9500:

      BUS# X-- NAME --X BASKV AREA  V(PU)  V(KV)      BUS# X-- NAME --X BASKV AREA  V(PU)  V(KV)

                                            * NONE *
```

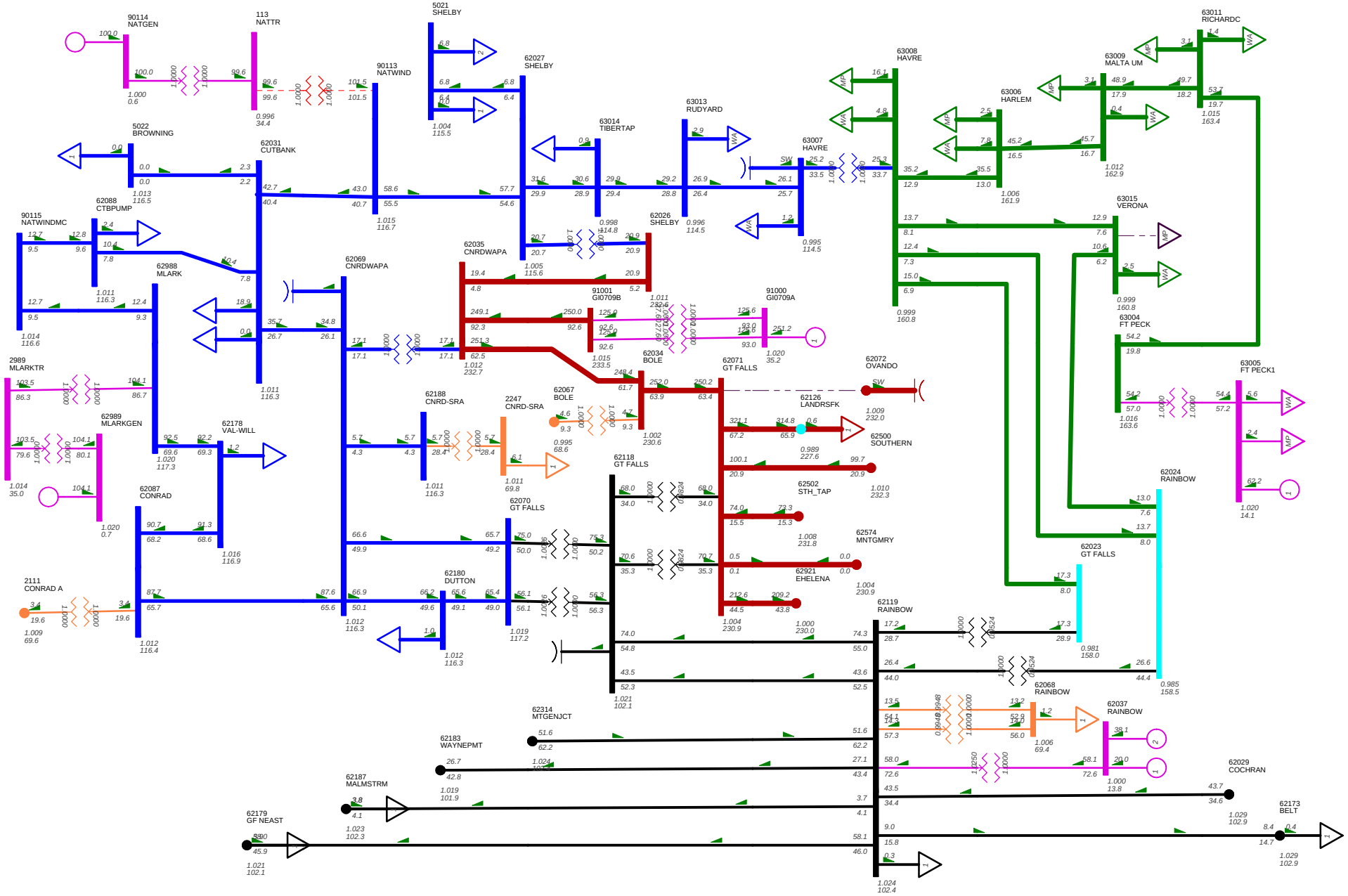

2010 LA BASE CASE: GTF=170, FP=62, GTF-3RVRS 230, NOGTF-OV
CTBWIND=100, VALWIND=104, HIGHWD=268, MCDC=150WE, CRO=77NS
FRI, JUN 13 2008 18:27
CONWIND=250 MW (N-0)

Bus - VOLTAGE (kV/PU)
Branch - MVA/% OF RATE A
Equipment - MVA

100.0%RATEA
0.990UV
1.040OV

kV: <=50.000 <=69.000 <=100.000 <=115.000
<=161.000 <=230.000 <=500.000 >500.000

```
 1
 2
 3  ------------------------------------------------------------------------------
 4
 5      PTI INTERACTIVE POWER SYSTEM SIMULATOR--PSS(tm)E    FRI, JUN 13 2008  18:23
 6   2010 LA BASE CASE:  GTF=170, FP=62, GTF-3RVRS 230, NOGTF-OV
 7   CTBWIND=100, VALWIND=104, HIGHWD=268, MCDC=150WE, CRO=77NS
 8                          OUTPUT FOR AREA 62 [MONTANA     ]
 9   BRANCH LOADINGS ABOVE  95.0 % OF RATING (MVA FOR TRANSFORMERS, CURRENT FOR NON-TRANSFORMER BRANCHES):
10
11   X--------- FROM BUS ----------X X---------- TO BUS -----------X               RATING SET A    RATING SET B    RATING SET C
12     BUS# X-- NAME --X BASKV  AREA   BUS# X-- NAME --X BASKV  AREA CKT LOADING  RATING PERCENT  RATING PERCENT  RATING PERCENT
13      106 JGW_TRAN    34.500*   62  90105 JGWIND      230.00    62  1    192.1   200.0    96.1    --      --      --      --
14      107 KENFIELD    34.500*   62  90107 KFIELDGEN   0.5750    62  1     21.8    22.8    95.8    --      --      --      --
15      113 NATTR       34.500    62  90113 NATWIND     115.00*   62  1    101.5   100.0   101.5    --      --      --      --
16     3095 SUMATRA     69.000*   62  62584 SUMATRA     34.500    62  1     45.4    46.7    97.1    --      --      --      --
17    62011 HOLTER      6.6000*   62  62120 HOLTER      100.00    62  1     50.4    48.0   105.1    --      --      --      --
18    62025 CANYON      7.0000*   62  62122 CANYON F    100.00    62  1     59.2    62.0    95.5    --      --      --      --
19    62034 BOLE        230.00    62  62035 CNRDWAPA    230.00*   62  1    248.4   402.4    61.7    --      --     100.0   248.4
20    62034 BOLE        230.00*   62  62071 GT FALLS    230.00    62  1    251.4   394.4    63.7    --      --     100.0   251.4
21    62042 BILGEN I    13.800*   62  62101 BILINGSX    50.000    62  1     65.2    60.0   108.7    --      --      --      --
22    62043 MONTANA1    13.800    62  62059 MONTANA1    115.00*   62  1     40.2    40.0   100.6    --      --      --      --
23    62106 HARLOWTN    100.00    62  62227 TWO DOT     100.00*   62  1     64.7    57.2   113.2    --      --      --      --
24    62227 TWO DOT     100.00    62  62235 MARTNSDA    100.00*   62  1     57.5    57.2   100.4    --      --      --      --
25
26
27
28    ------------------------------------------------------------------------------
29
30        PTI INTERACTIVE POWER SYSTEM SIMULATOR--PSS(tm)E    FRI, JUN 13 2008  18:23
31     2010 LA BASE CASE:  GTF=170, FP=62, GTF-3RVRS 230, NOGTF-OV
32     CTBWIND=100, VALWIND=104, HIGHWD=268, MCDC=150WE, CRO=77NS
33
34     BUSES WITH VOLTAGE GREATER THAN 1.0500:
35
36       BUS# X-- NAME --X BASKV AREA  V(PU)  V(KV)      BUS# X-- NAME --X BASKV AREA  V(PU)  V(KV)
37       1053 DELL-R      161.00   62 1.0647 171.41      1064 SHERIDAN    50.000   62 1.0614 53.069
38       2031 FAIRFILD    69.000   62 1.0687 73.740      3170 EXXONAUX    12.500   62 1.0516 13.144
39       3189 IVANHOE     2.4000   62 1.0672  2.561      3591 CL1&STR7    7.2000   62 1.0585  7.621
40       3977 CHROME*1    13.800   62 1.0528 14.528      3978 CHROMET1    13.800   62 1.0528 14.528
41       5007 SALMONID    69.000   62 1.0726 74.007      5027 TENDOY      69.000   62 1.0718 73.954
42       5028 LEMHI       69.000   62 1.0722 73.983      5154 PTRSNFLT    69.000   62 1.0640 73.413
43       6022 BELGRADE    50.000   62 1.0515 52.575      6025 BOZMN SS    50.000   62 1.0614 53.068
44       6026 BOZMN NS    50.000   62 1.0604 53.019      6027 EGALNS T    50.000   62 1.0604 53.020
45       6029 JACKRABT    69.000   62 1.0596 73.110      6032 SOURDOUG    50.000   62 1.0602 53.009
46       6033 MTELLS-R    50.000   62 1.0600 52.999      6034 MUIR        50.000   62 1.0595 52.974
47       6035 CLYDPARK    50.000   62 1.0518 52.590      6040 LIVNGSTN    69.000   62 1.0684 73.718
48       6043 BRAND S     69.000   62 1.0677 73.673      6049 PINECR-R    69.000   62 1.0651 73.491
49       6070 BGTMBERA    50.000   62 1.0522 52.611      6071 MEADWVIL    69.000   62 1.0555 72.831
50       6078 BZRIVERS    50.000   62 1.0553 52.763      6082 PATERSNT    50.000   62 1.0596 52.980
51       6084 PATERSON    50.000   62 1.0570 52.852      6119 AMSTER T    50.000   62 1.0537 52.685
52       6120 AMSTRDAM    50.000   62 1.0506 52.531      6125 BOZ SS 1    50.000   62 1.0614 53.068
53       6126 BOZ NS 1    50.000   62 1.0604 53.021      6132 W SOURDH    50.000   62 1.0606 53.029
54       9052 THFALLPM    50.000   62 1.0562 52.810      9070 FLODINLM    50.000   62 1.0551 52.755
55       9913 THFAPT*1    2.4000   62 1.0614  2.547      9914 THFAPTT1    2.4000   62 1.0588  2.541
56      62012 TOWN2       500.00   62 1.1125 556.26     62013 TOWN1       500.00   62 1.1125 556.26
57      62025 CANYON      7.0000   62 1.1278  7.894     62030 PTRSNFLT    230.00   62 1.0736 246.93
58      62046 BROADVU     500.00   62 1.0829 541.43     62053 BROADV&2    500.00   62 1.0737 536.87
```

```
       62054 BROADV&1    500.00   62 1.0742 537.12     62057 COLSTRP     500.00   62 1.0800 540.00
       62075 MILLERCK    69.000   62 1.0544 72.754     62348 EGALLTIN    50.000   62 1.0603 53.017
       62349 JACKRABT    50.000   62 1.0579 52.896     62821 LIGNITE     230.00   62 1.0779 247.92
       90106 JG_CLR      0.5750   62 1.0593  0.609


      BUSES WITH VOLTAGE LESS THAN 0.9500:

        BUS# X-- NAME --X BASKV AREA  V(PU)  V(KV)      BUS# X-- NAME --X BASKV AREA  V(PU)  V(KV)
        5094 MCCONE-R    50.000   62 0.9493 47.464      5412 GRASRANG    50.000   62 0.9477 47.387
        5418 BOXLDR-R    50.000   62 0.9493 47.464
```

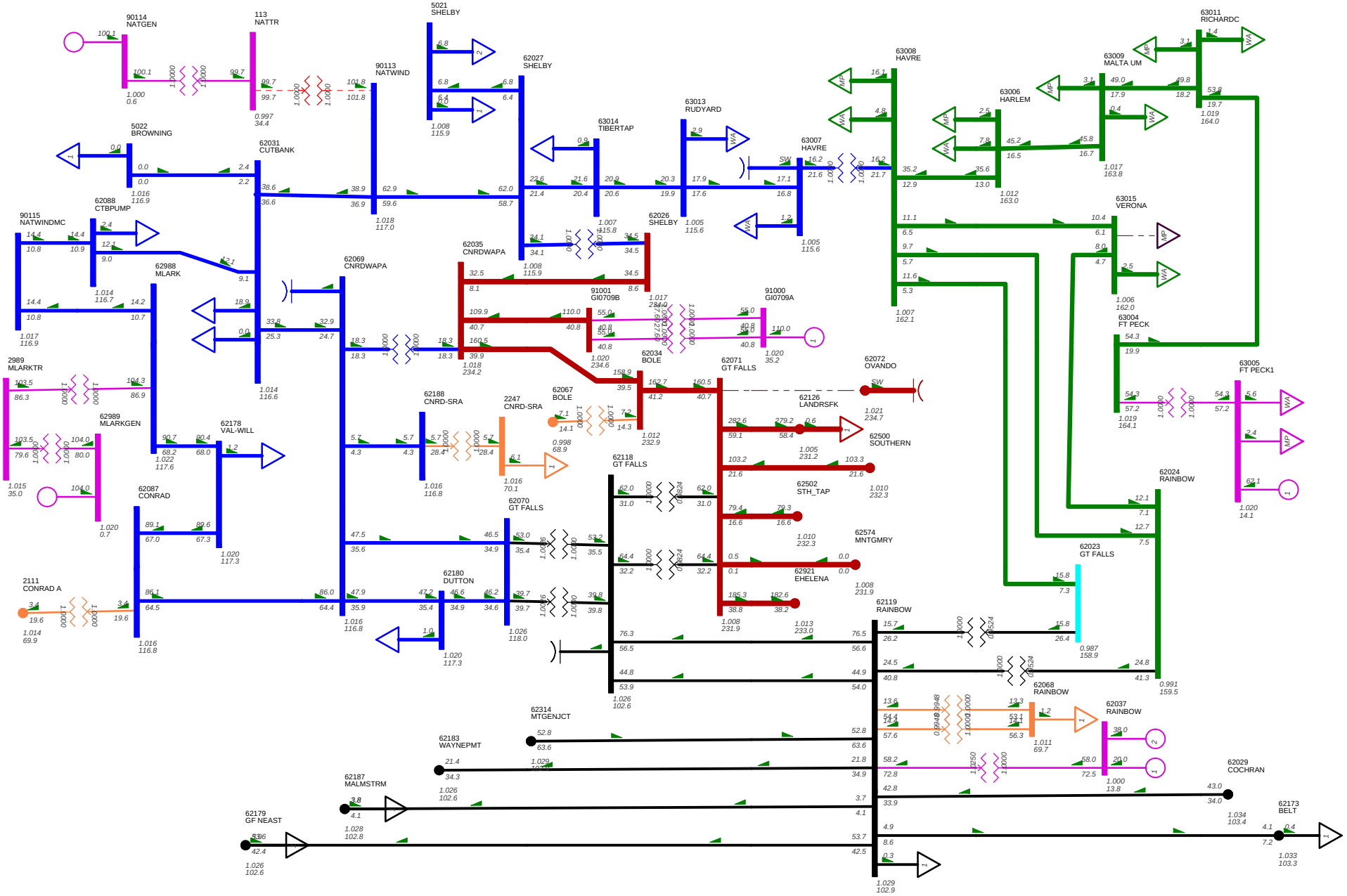

2010 LA BASE CASE: GTF=170, FP=62, GTF-3RVRS 230, NOGTF-OV
CTBWIND=100, VALWIND=104, HIGHWD=268, MCDC=150EW, CRO=77NS
FRI, JUN 13 2008 19:17
CONWIND=110 MW (N-0)

Bus - VOLTAGE (kV/PU)
Branch - MVA/% OF RATE A
Equipment - MVA

100.0%RATEA
0.990UV
1.040OV

kV: <=50.000 <=69.000 <=100.000 <=115.000
<=161.000 <=230.000 <=500.000 >500.000

```
 1
 2
 3  ------------------------------------------------------------------------------
 4
 5      PTI INTERACTIVE POWER SYSTEM SIMULATOR--PSS(tm)E    FRI, JUN 13 2008  19:14
 6   2010 LA BASE CASE:  GTF=170, FP=62, GTF-3RVRS 230, NOGTF-OV
 7   CTBWIND=100, VALWIND=104, HIGHWD=268, MCDC=150EW, CRO=77NS
 8                          OUTPUT FOR AREA 62 [MONTANA     ]
 9   BRANCH LOADINGS ABOVE  95.0 % OF RATING (MVA FOR TRANSFORMERS, CURRENT FOR NON-TRANSFORMER BRANCHES):
10
11   X--------- FROM BUS ----------X X---------- TO BUS -----------X               RATING SET A    RATING SET B    RATING SET C
12     BUS# X-- NAME --X BASKV  AREA   BUS# X-- NAME --X BASKV  AREA CKT LOADING  RATING PERCENT  RATING PERCENT  RATING PERCENT
13      107 KENFIELD    34.500*   62  90107 KFIELDGEN   0.5750    62  1     21.9    22.8    96.3    --      --      --      --
14      113 NATTR       34.500    62  90113 NATWIND     115.00*   62  1    101.8   100.0   101.8    --      --      --      --
15     3095 SUMATRA     69.000*   62  62584 SUMATRA     34.500    62  1     45.4    46.7    97.3    --      --      --      --
16    62011 HOLTER      6.6000*   62  62120 HOLTER      100.00    62  1     49.5    48.0   103.1    --      --      --      --
17    62034 BOLE        230.00    62  62035 CNRDWAPA    230.00*   62  1    157.6   402.4    39.2    --      --     100.0   157.6
18    62034 BOLE        230.00*   62  62071 GT FALLS    230.00    62  1    160.7   394.4    40.7    --      --     100.0   160.7
19    62042 BILGEN I    13.800*   62  62101 BILINGSX    50.000    62  1     65.2    60.0   108.7    --      --      --      --
20    62043 MONTANA1    13.800    62  62059 MONTANA1    115.00*   62  1     40.2    40.0   100.5    --      --      --      --
21    62106 HARLOWTN    100.00    62  62227 TWO DOT     100.00*   62  1     61.1    57.2   106.8    --      --      --      --
22
23
24
25    ------------------------------------------------------------------------------
26
27        PTI INTERACTIVE POWER SYSTEM SIMULATOR--PSS(tm)E    FRI, JUN 13 2008  19:14
28     2010 LA BASE CASE:  GTF=170, FP=62, GTF-3RVRS 230, NOGTF-OV
29     CTBWIND=100, VALWIND=104, HIGHWD=268, MCDC=150EW, CRO=77NS
30
31     BUSES WITH VOLTAGE GREATER THAN 1.0500:
32
33       BUS# X-- NAME --X BASKV AREA  V(PU)  V(KV)      BUS# X-- NAME --X BASKV AREA  V(PU)  V(KV)
34       1053 DELL-R      161.00   62 1.0704 172.34      1064 SHERIDAN    50.000   62 1.0698 53.489
35       2031 FAIRFILD    69.000   62 1.0732 74.048      3170 EXXONAUX    12.500   62 1.0516 13.145
36       3189 IVANHOE     2.4000   62 1.0684  2.564      3591 CL1&STR7    7.2000   62 1.0578  7.616
37       3977 CHROME*1    13.800   62 1.0538 14.543      3978 CHROMET1    13.800   62 1.0538 14.543
38       5007 SALMONID    69.000   62 1.0769 74.305      5027 TENDOY      69.000   62 1.0761 74.252
39       5028 LEMHI       69.000   62 1.0765 74.281      5154 PTRSNFLT    69.000   62 1.0682 73.709
40       6018 MANHATNT    50.000   62 1.0582 52.911      6019 MANHATPM    50.000   62 1.0570 52.851
41       6022 BELGRADE    50.000   62 1.0598 52.988      6025 BOZMN SS    50.000   62 1.0695 53.477
42       6026 BOZMN NS    50.000   62 1.0685 53.425      6027 EGALNS T    50.000   62 1.0685 53.426
43       6029 JACKRABT    69.000   62 1.0678 73.682      6032 SOURDOUG    50.000   62 1.0683 53.417
44       6033 MTELLS-R    50.000   62 1.0682 53.408      6034 MUIR        50.000   62 1.0677 53.383
45       6035 CLYDPARK    50.000   62 1.0585 52.926      6037 CLYDPK-R    50.000   62 1.0560 52.798
46       6038 LIVIN NS    50.000   62 1.0509 52.546      6040 LIVNGSTN    69.000   62 1.0750 74.174
47       6043 BRAND S     69.000   62 1.0743 74.129      6048 BGTIMB-R    50.000   62 1.0542 52.712
48       6049 PINECR-R    69.000   62 1.0717 73.948      6057 SPRNGL T    50.000   62 1.0508 52.541
49       6062 HUNTER      50.000   62 1.0501 52.507      6065 BGTIMBER    50.000   62 1.0528 52.640
50       6066 MELVILLE    50.000   62 1.0542 52.712      6070 BGTMBERA    50.000   62 1.0564 52.820
51       6071 MEADWVIL    69.000   62 1.0639 73.409      6074 HAYHOOK     50.000   62 1.0564 52.819
52       6078 BZRIVERS    50.000   62 1.0634 53.172      6082 PATERSNT    50.000   62 1.0678 53.391
53       6084 PATERSON    50.000   62 1.0653 53.264      6089 WILSAL-R    50.000   62 1.0549 52.744
54       6119 AMSTER T    50.000   62 1.0620 53.098      6120 AMSTRDAM    50.000   62 1.0589 52.945
55       6125 BOZ SS 1    50.000   62 1.0695 53.477      6126 BOZ NS 1    50.000   62 1.0685 53.427
56       6132 W SOURDH    50.000   62 1.0687 53.437      6931 EMIGRT*1    13.800   62 1.0503 14.494
57       6932 EMIGRTT1    13.800   62 1.0503 14.494      9052 THFALLPM    50.000   62 1.0570 52.849
58       9057 LOLO        69.000   62 1.0547 72.777      9060 MACLAY      69.000   62 1.0553 72.817
```

```
      9069 LOLO-R      69.000   62 1.0547 72.777      9070 FLODINLM    50.000   62 1.0559 52.794
      9913 THFAPT*1    2.4000   62 1.0622  2.549      9914 THFAPTT1    2.4000   62 1.0595  2.543
     62012 TOWN2       500.00   62 1.1165 558.27     62013 TOWN1       500.00   62 1.1165 558.27
     62025 CANYON      7.0000   62 1.1304  7.913     62030 PTRSNFLT    230.00   62 1.0778 247.89
     62046 BROADVU     500.00   62 1.0850 542.50     62053 BROADV&2    500.00   62 1.0769 538.45
     62054 BROADV&1    500.00   62 1.0775 538.73     62057 COLSTRP     500.00   62 1.0800 540.00
     62075 MILLERCK    69.000   62 1.0603 73.162     62084 DILLON S    161.00   62 1.0500 169.06
     62348 EGALLTIN    50.000   62 1.0684 53.422     62349 JACKRABT    50.000   62 1.0662 53.309
     62821 LIGNITE     230.00   62 1.0770 247.70     90106 JG_CLR      0.5750   62 1.0564  0.607


    BUSES WITH VOLTAGE LESS THAN 0.9500:

      BUS# X-- NAME --X BASKV AREA  V(PU)  V(KV)      BUS# X-- NAME --X BASKV AREA  V(PU)  V(KV)

                                            * NONE *
```

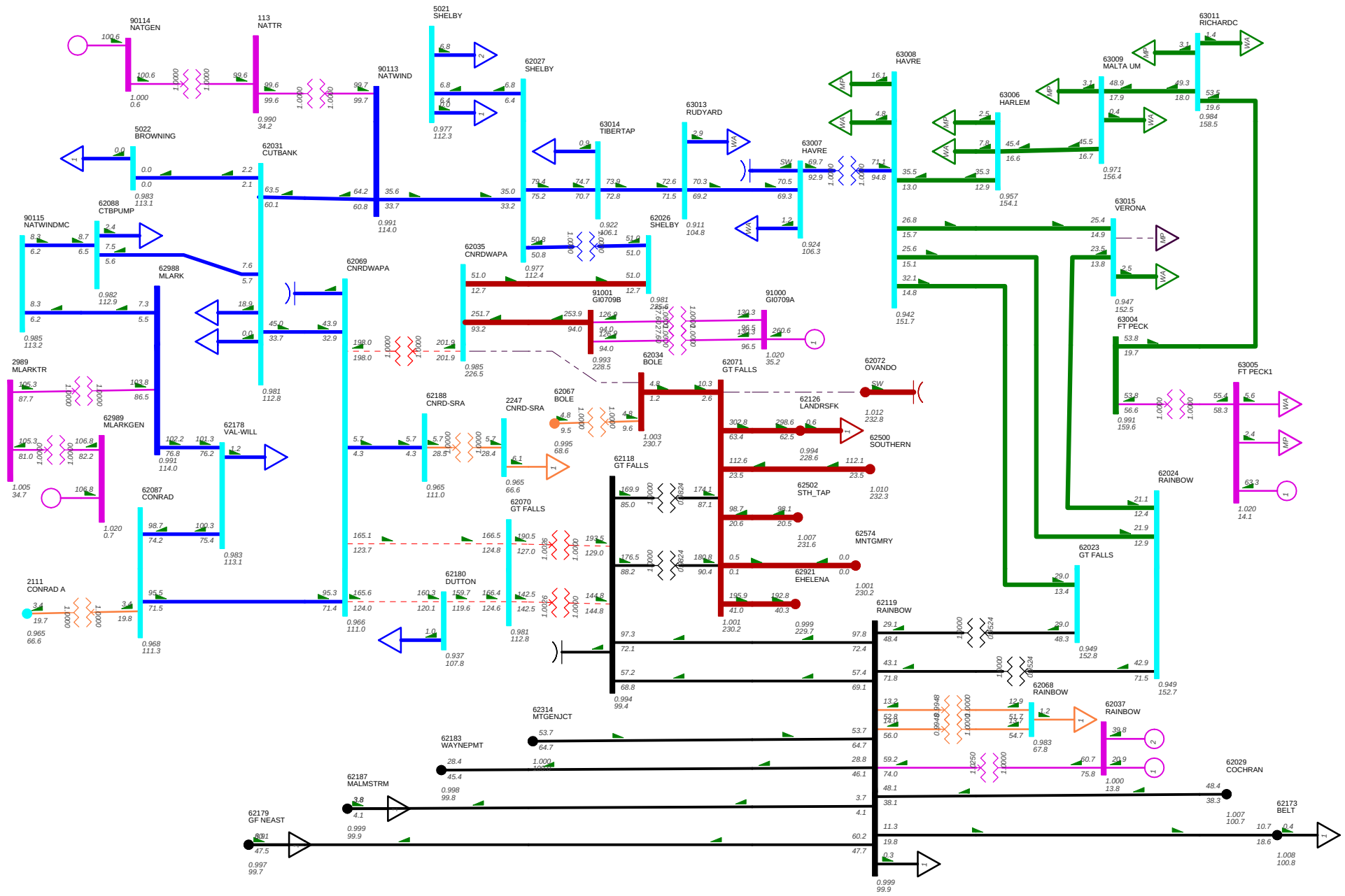

2010 LA BASE CASE: GTF=170, FP=62, GTF-3RVRS 230, NOGTF-OV
CTBWIND=100, VALWIND=104, HIGHWD=268, MCDC=150WE, CRO=77NS
FRI, JUN 13 2008 18:21
CONWIND=250 MW (N-1: CON-BOL 230kV)

Bus - VOLTAGE (kV/PU)
Branch - MVA/% OF RATE A
Equipment - MVA

100.0%RATEA
0.990UV
1.040OV

kV: <=50.000 <=69.000 <=100.000 <=115.000
<=161.000 <=230.000 <=500.000 >500.000

```
 1
 2
 3  ------------------------------------------------------------------------------
 4
 5      PTI INTERACTIVE POWER SYSTEM SIMULATOR--PSS(tm)E    FRI, JUN 13 2008  18:17
 6   2010 LA BASE CASE:  GTF=170, FP=62, GTF-3RVRS 230, NOGTF-OV
 7   CTBWIND=100, VALWIND=104, HIGHWD=268, MCDC=150WE, CRO=77NS
 8                          OUTPUT FOR AREA 62 [MONTANA     ]
 9   BRANCH LOADINGS ABOVE  95.0 % OF RATING (MVA FOR TRANSFORMERS, CURRENT FOR NON-TRANSFORMER BRANCHES):
10
11   X--------- FROM BUS ----------X X---------- TO BUS -----------X               RATING SET A    RATING SET B    RATING SET C
12     BUS# X-- NAME --X BASKV  AREA   BUS# X-- NAME --X BASKV  AREA CKT LOADING  RATING PERCENT  RATING PERCENT  RATING PERCENT
13      106 JGW_TRAN    34.500*   62  90105 JGWIND      230.00    62  1    191.8   200.0    95.9    --      --      --      --
14      113 NATTR       34.500    62  90113 NATWIND     115.00*   62  1     99.7   100.0    99.7    --      --      --      --
15     3095 SUMATRA     69.000*   62  62584 SUMATRA     34.500    62  1     45.4    46.7    97.2    --      --      --      --
16    62011 HOLTER      6.6000*   62  62120 HOLTER      100.00    62  1     50.4    48.0   105.1    --      --      --      --
17    62025 CANYON      7.0000*   62  62122 CANYON F    100.00    62  1     59.2    62.0    95.5    --      --      --      --
18    62035 CNRDWAPA    230.00*   62  62069 CNRDWAPA    115.00    62  1    201.9   100.0   201.9    --      --      --      --
19    62042 BILGEN I    13.800*   62  62101 BILINGSX    50.000    62  1     65.2    60.0   108.7    --      --      --      --
20    62043 MONTANA1    13.800    62  62059 MONTANA1    115.00*   62  1     40.2    40.0   100.6    --      --      --      --
21    62069 CNRDWAPA    115.00*   62  62070 GT FALLS    115.00    62  1    170.9   133.4   128.1    --      --      --      --
22    62069 CNRDWAPA    115.00*   62  62180 DUTTON      115.00    62  1    171.5   133.5   128.5    --      --      --      --
23    62070 GT FALLS    115.00    62  62118 GT FALLS    100.00*   62  1    144.8   100.0   144.8    --      --      --      --
24    62070 GT FALLS    115.00    62  62118 GT FALLS    100.00*   62  2    193.5   150.0   129.0    --      --      --      --
25    62070 GT FALLS    115.00    62  62180 DUTTON      115.00*   62  1    170.4   133.5   127.6    --      --      --      --
26    62106 HARLOWTN    100.00    62  62227 TWO DOT     100.00*   62  1     65.0    57.2   113.6    --      --      --      --
27    62227 TWO DOT     100.00    62  62235 MARTNSDA    100.00*   62  1     57.7    57.2   100.9    --      --      --      --
28    91000 GI0709A     34.500*   62  91001 GI0709B     230.00    62  1    130.3   135.0    96.5   135.0    96.5    --      --
29    91000 GI0709A     34.500*   62  91001 GI0709B     230.00    62  2    130.3   135.0    96.5   135.0    96.5    --      --
30
31
32
33    ------------------------------------------------------------------------------
34
35        PTI INTERACTIVE POWER SYSTEM SIMULATOR--PSS(tm)E    FRI, JUN 13 2008  18:19
36     2010 LA BASE CASE:  GTF=170, FP=62, GTF-3RVRS 230, NOGTF-OV
37     CTBWIND=100, VALWIND=104, HIGHWD=268, MCDC=150WE, CRO=77NS
38
39     BUSES WITH VOLTAGE GREATER THAN 1.0500:
40
41       BUS# X-- NAME --X BASKV AREA  V(PU)  V(KV)      BUS# X-- NAME --X BASKV AREA  V(PU)  V(KV)
42       1053 DELL-R      161.00   62 1.0646 171.40      1064 SHERIDAN    50.000   62 1.0619 53.094
43       3170 EXXONAUX    12.500   62 1.0516 13.145      3189 IVANHOE     2.4000   62 1.0674  2.562
44       3591 CL1&STR7    7.2000   62 1.0583  7.620      3977 CHROME*1    13.800   62 1.0529 14.530
45       3978 CHROMET1    13.800   62 1.0529 14.530      5007 SALMONID    69.000   62 1.0719 73.960
46       5027 TENDOY      69.000   62 1.0711 73.907      5028 LEMHI       69.000   62 1.0715 73.936
47       5154 PTRSNFLT    69.000   62 1.0633 73.367      6018 MANHATNT    50.000   62 1.0503 52.513
48       6022 BELGRADE    50.000   62 1.0518 52.590      6025 BOZMN SS    50.000   62 1.0616 53.082
49       6026 BOZMN NS    50.000   62 1.0607 53.033      6027 EGALNS T    50.000   62 1.0607 53.034
50       6029 JACKRABT    69.000   62 1.0599 73.131      6032 SOURDOUG    50.000   62 1.0605 53.024
51       6033 MTELLS-R    50.000   62 1.0603 53.014      6034 MUIR        50.000   62 1.0598 52.989
52       6035 CLYDPARK    50.000   62 1.0520 52.602      6040 LIVNGSTN    69.000   62 1.0686 73.736
53       6043 BRAND S     69.000   62 1.0680 73.691      6048 BGTIMB-R    50.000   62 1.0501 52.505
54       6049 PINECR-R    69.000   62 1.0653 73.508      6066 MELVILLE    50.000   62 1.0501 52.505
55       6070 BGTMBERA    50.000   62 1.0524 52.621      6071 MEADWVIL    69.000   62 1.0558 72.853
56       6078 BZRIVERS    50.000   62 1.0556 52.778      6082 PATERSNT    50.000   62 1.0599 52.995
57       6084 PATERSON    50.000   62 1.0573 52.867      6119 AMSTER T    50.000   62 1.0540 52.700
58       6120 AMSTRDAM    50.000   62 1.0509 52.546      6125 BOZ SS 1    50.000   62 1.0616 53.082
```

```
      6126 BOZ NS 1    50.000   62 1.0607 53.035      6132 W SOURDH    50.000   62 1.0609 53.044
      9052 THFALLPM    50.000   62 1.0564 52.819      9060 MACLAY      69.000   62 1.0500 72.451
      9070 FLODINLM    50.000   62 1.0553 52.763      9913 THFAPT*1    2.4000   62 1.0616  2.548
      9914 THFAPTT1    2.4000   62 1.0589  2.541     62012 TOWN2       500.00   62 1.1135 556.76
     62013 TOWN1       500.00   62 1.1135 556.76     62025 CANYON      7.0000   62 1.1186  7.830
     62030 PTRSNFLT    230.00   62 1.0730 246.78     62046 BROADVU     500.00   62 1.0834 541.71
     62053 BROADV&2    500.00   62 1.0746 537.28     62054 BROADV&1    500.00   62 1.0751 537.54
     62057 COLSTRP     500.00   62 1.0800 540.00     62075 MILLERCK    69.000   62 1.0550 72.796
     62348 EGALLTIN    50.000   62 1.0606 53.031     62349 JACKRABT    50.000   62 1.0582 52.911
     62821 LIGNITE     230.00   62 1.0777 247.86     90106 JG_CLR      0.5750   62 1.0589  0.609


    BUSES WITH VOLTAGE LESS THAN 0.9500:

      BUS# X-- NAME --X BASKV AREA  V(PU)  V(KV)      BUS# X-- NAME --X BASKV AREA  V(PU)  V(KV)
      5412 GRASRANG    50.000   62 0.9486 47.430     62023 GT FALLS    161.00   62 0.9491 152.81
   62024 RAINBOW     161.00   62 0.9486 152.72     62180 DUTTON      115.00   62 0.9373 107.79
```

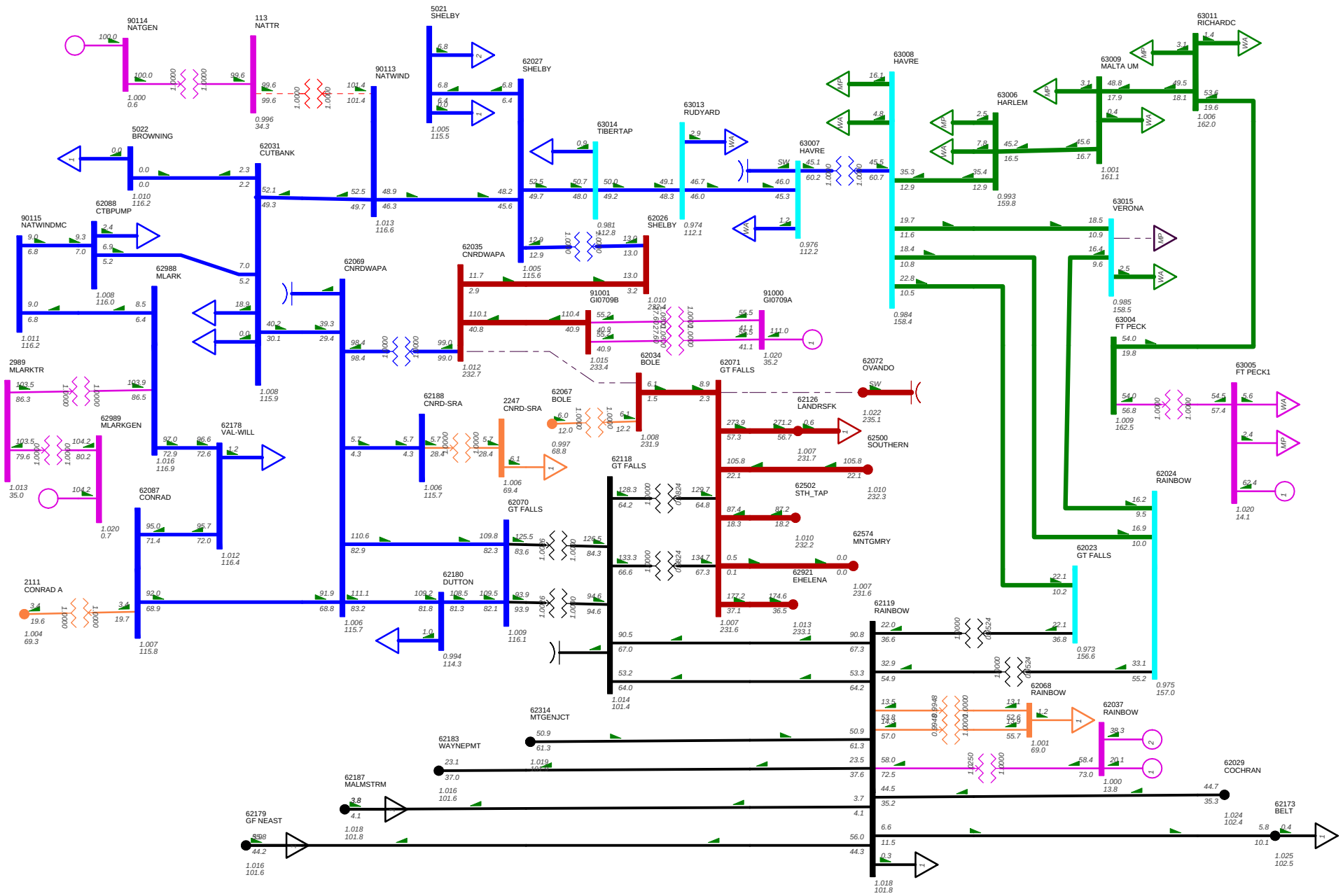

2010 LA BASE CASE: GTF=170, FP=62, GTF-3RVRS 230, NOGTF-OV
CTBWIND=100, VALWIND=104, HIGHWD=268, MCDC=150EW, CRO=77NS
FRI, JUN 13 2008 19:08
CONWIND=110 MW (N-1: CON-BOL 230kV)

Bus - VOLTAGE (kV/PU)
Branch - MVA/% OF RATE A
Equipment - MVA

100.0%RATEA
0.990UV
1.040OV

kV: <=50.000 <=69.000 <=100.000 <=115.000
<=161.000 <=230.000 <=500.000 >500.000

```
 1
 2
 3  ------------------------------------------------------------------------------
 4
 5      PTI INTERACTIVE POWER SYSTEM SIMULATOR--PSS(tm)E    FRI, JUN 13 2008  19:06
 6   2010 LA BASE CASE:  GTF=170, FP=62, GTF-3RVRS 230, NOGTF-OV
 7   CTBWIND=100, VALWIND=104, HIGHWD=268, MCDC=150EW, CRO=77NS
 8                          OUTPUT FOR AREA 62 [MONTANA     ]
 9   BRANCH LOADINGS ABOVE  95.0 % OF RATING (MVA FOR TRANSFORMERS, CURRENT FOR NON-TRANSFORMER BRANCHES):
10
11   X--------- FROM BUS ----------X X---------- TO BUS -----------X                RATING SET A    RATING SET B    RATING SET C
12     BUS# X-- NAME --X BASKV  AREA   BUS# X-- NAME --X BASKV  AREA CKT LOADING  RATING PERCENT  RATING PERCENT  RATING PERCENT
13      107 KENFIELD    34.500*   62  90107 KFIELDGEN   0.5750    62  1     21.7    22.8    95.3    --      --      --      --
14      113 NATTR       34.500    62  90113 NATWIND     115.00*   62  1    101.4   100.0   101.4    --      --      --      --
15     3095 SUMATRA     69.000*   62  62584 SUMATRA     34.500    62  1     45.4    46.7    97.3    --      --      --      --
16    62011 HOLTER      6.6000*   62  62120 HOLTER      100.00    62  1     50.0    48.0   104.2    --      --      --      --
17    62025 CANYON      7.0000*   62  62122 CANYON F    100.00    62  1     59.1    62.0    95.3    --      --      --      --
18    62035 CNRDWAPA    230.00*   62  62069 CNRDWAPA    115.00    62  1     99.0   100.0    99.0    --      --      --      --
19    62042 BILGEN I    13.800*   62  62101 BILINGSX    50.000    62  1     65.2    60.0   108.7    --      --      --      --
20    62043 MONTANA1    13.800    62  62059 MONTANA1    115.00*   62  1     40.2    40.0   100.5    --      --      --      --
21    62106 HARLOWTN    100.00    62  62227 TWO DOT     100.00*   62  1     61.8    57.2   108.0    --      --      --      --
22    62227 TWO DOT     100.00    62  62235 MARTNSDA    100.00*   62  1     54.6    57.2    95.5    --      --      --      --
23
24
25
26    ------------------------------------------------------------------------------
27
28        PTI INTERACTIVE POWER SYSTEM SIMULATOR--PSS(tm)E    FRI, JUN 13 2008  19:06
29     2010 LA BASE CASE:  GTF=170, FP=62, GTF-3RVRS 230, NOGTF-OV
30     CTBWIND=100, VALWIND=104, HIGHWD=268, MCDC=150EW, CRO=77NS
31
32     BUSES WITH VOLTAGE GREATER THAN 1.0500:
33
34       BUS# X-- NAME --X BASKV AREA  V(PU)  V(KV)      BUS# X-- NAME --X BASKV AREA  V(PU)  V(KV)
35       1053 DELL-R      161.00   62 1.0709 172.42      1064 SHERIDAN    50.000   62 1.0704 53.519
36       2031 FAIRFILD    69.000   62 1.0635 73.382      3170 EXXONAUX    12.500   62 1.0516 13.145
37       3189 IVANHOE     2.4000   62 1.0684  2.564      3591 CL1&STR7    7.2000   62 1.0577  7.615
38       3977 CHROME*1    13.800   62 1.0539 14.544      3978 CHROMET1    13.800   62 1.0539 14.544
39       5007 SALMONID    69.000   62 1.0774 74.342      5027 TENDOY      69.000   62 1.0767 74.290
40       5028 LEMHI       69.000   62 1.0771 74.319      5125 SLVR BOW    69.000   62 1.0501 72.457
41       5154 PTRSNFLT    69.000   62 1.0688 73.746      6018 MANHATNT    50.000   62 1.0587 52.936
42       6019 MANHATPM    50.000   62 1.0575 52.875      6022 BELGRADE    50.000   62 1.0602 53.012
43       6025 BOZMN SS    50.000   62 1.0700 53.502      6026 BOZMN NS    50.000   62 1.0690 53.449
44       6027 EGALNS T    50.000   62 1.0690 53.451      6029 JACKRABT    69.000   62 1.0683 73.716
45       6032 SOURDOUG    50.000   62 1.0688 53.442      6033 MTELLS-R    50.000   62 1.0686 53.432
46       6034 MUIR        50.000   62 1.0682 53.408      6035 CLYDPARK    50.000   62 1.0589 52.945
47       6036 LIVNGSTN    50.000   62 1.0501 52.507      6037 CLYDPK-R    50.000   62 1.0564 52.818
48       6038 LIVIN NS    50.000   62 1.0513 52.565      6039 LIVING-R    50.000   62 1.0501 52.507
49       6040 LIVNGSTN    69.000   62 1.0754 74.201      6043 BRAND S     69.000   62 1.0747 74.156
50       6048 BGTIMB-R    50.000   62 1.0545 52.724      6049 PINECR-R    69.000   62 1.0721 73.975
51       6057 SPRNGL T    50.000   62 1.0511 52.556      6060 SWINGLEY    50.000   62 1.0501 52.507
52       6061 E & W       50.000   62 1.0503 52.513      6062 HUNTER      50.000   62 1.0504 52.522
53       6063 SPRGDALE    50.000   62 1.0502 52.512      6065 BGTIMBER    50.000   62 1.0530 52.652
54       6066 MELVILLE    50.000   62 1.0545 52.724      6070 BGTMBERA    50.000   62 1.0566 52.832
55       6071 MEADWVIL    69.000   62 1.0644 73.444      6073 HOL PUMP    50.000   62 1.0502 52.508
56       6074 HAYHOOK     50.000   62 1.0568 52.839      6078 BZRIVERS    50.000   62 1.0639 53.197
57       6082 PATERSNT    50.000   62 1.0683 53.415      6084 PATERSON    50.000   62 1.0658 53.288
58       6089 WILSAL-R    50.000   62 1.0553 52.764      6093 HOLPUM T    50.000   62 1.0501 52.507
```

```
      6119 AMSTER T    50.000   62 1.0625 53.123      6120 AMSTRDAM    50.000   62 1.0594 52.970
      6125 BOZ SS 1    50.000   62 1.0700 53.502      6126 BOZ NS 1    50.000   62 1.0690 53.451
      6132 W SOURDH    50.000   62 1.0692 53.462      6931 EMIGRT*1    13.800   62 1.0507 14.500
      6932 EMIGRTT1    13.800   62 1.0507 14.500      9052 THFALLPM    50.000   62 1.0571 52.854
      9057 LOLO        69.000   62 1.0553 72.813      9060 MACLAY      69.000   62 1.0558 72.853
      9069 LOLO-R      69.000   62 1.0553 72.813      9070 FLODINLM    50.000   62 1.0560 52.799
      9913 THFAPT*1    2.4000   62 1.0623  2.549      9914 THFAPTT1    2.4000   62 1.0596  2.543
     62012 TOWN2       500.00   62 1.1170 558.52     62013 TOWN1       500.00   62 1.1170 558.52
     62025 CANYON      7.0000   62 1.1364  7.955     62030 PTRSNFLT    230.00   62 1.0783 248.02
     62033 ANA BPA     115.00   62 1.0501 120.76     62046 BROADVU     500.00   62 1.0852 542.62
     62053 BROADV&2    500.00   62 1.0773 538.63     62054 BROADV&1    500.00   62 1.0778 538.91
     62057 COLSTRP     500.00   62 1.0800 540.00     62075 MILLERCK    69.000   62 1.0608 73.198
     62084 DILLON S    161.00   62 1.0506 169.14     62348 EGALLTIN    50.000   62 1.0689 53.447
     62349 JACKRABT    50.000   62 1.0667 53.334     62821 LIGNITE     230.00   62 1.0769 247.68
     90106 JG_CLR      0.5750   62 1.0564  0.607


    BUSES WITH VOLTAGE LESS THAN 0.9500:

      BUS# X-- NAME --X BASKV AREA  V(PU)  V(KV)      BUS# X-- NAME --X BASKV AREA  V(PU)  V(KV)

                                            * NONE *
```

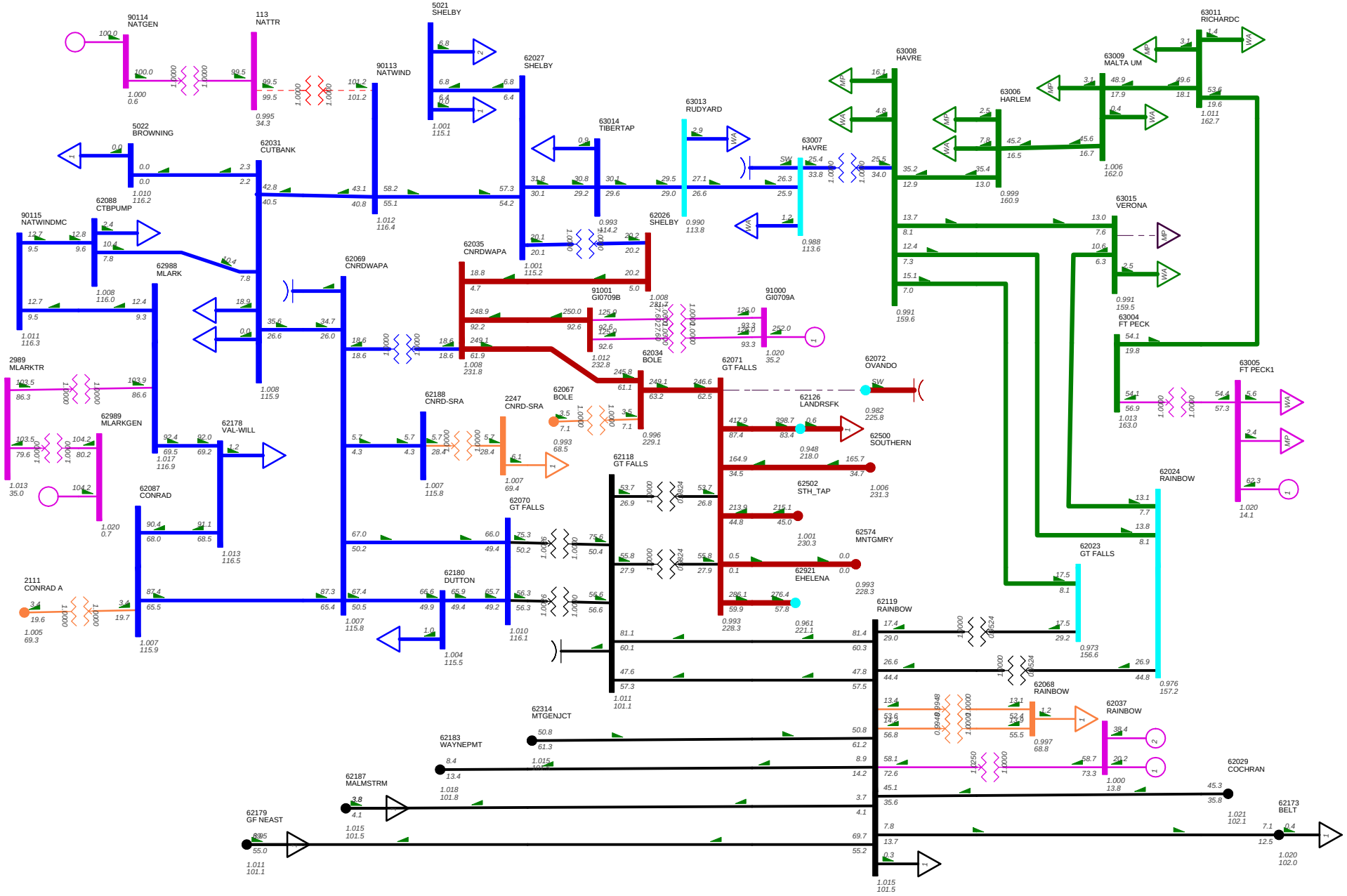

2010 LA BASE CASE: GTF=170, FP=62, GTF-3RVRS 230, NOGTF-OV
CTBWIND=100, VALWIND=104, HIGHWD=268, MCDC=150WE, CRO=77NS
FRI, JUN 13 2008 18:11
CONWIND=250 MW (N-1: BV-JG 230kV)

Bus - VOLTAGE (kV/PU)
Branch - MVA/% OF RATE A
Equipment - MVA

100.0%RATEA
0.990UV
1.040OV

kV: <=50.000 <=69.000 <=100.000 <=115.000
<=161.000 <=230.000 <=500.000 >500.000

```
 1
 2
 3  ------------------------------------------------------------------------------
 4
 5      PTI INTERACTIVE POWER SYSTEM SIMULATOR--PSS(tm)E    FRI, JUN 13 2008  18:07
 6   2010 LA BASE CASE:  GTF=170, FP=62, GTF-3RVRS 230, NOGTF-OV
 7   CTBWIND=100, VALWIND=104, HIGHWD=268, MCDC=150WE, CRO=77NS
 8                          OUTPUT FOR AREA 62 [MONTANA     ]
 9   BRANCH LOADINGS ABOVE  95.0 % OF RATING (MVA FOR TRANSFORMERS, CURRENT FOR NON-TRANSFORMER BRANCHES):
10
11   X--------- FROM BUS ----------X X---------- TO BUS -----------X               RATING SET A    RATING SET B    RATING SET C
12     BUS# X-- NAME --X BASKV  AREA   BUS# X-- NAME --X BASKV  AREA CKT LOADING  RATING PERCENT  RATING PERCENT  RATING PERCENT
13      113 NATTR       34.500    62  90113 NATWIND     115.00*   62  1    101.2   100.0   101.2    --      --      --      --
14     3095 SUMATRA     69.000*   62  62584 SUMATRA     34.500    62  1     45.1    46.7    96.5    --      --      --      --
15    62011 HOLTER      6.6000*   62  62120 HOLTER      100.00    62  1     50.4    48.0   105.1    --      --      --      --
16    62025 CANYON      7.0000*   62  62122 CANYON F    100.00    62  1     59.2    62.0    95.5    --      --      --      --
17    62034 BOLE        230.00    62  62035 CNRDWAPA    230.00*   62  1    247.2   402.4    61.4    --      --     100.0   247.2
18    62034 BOLE        230.00*   62  62071 GT FALLS    230.00    62  1    250.1   394.4    63.4    --      --     100.0   250.1
19    62036 JUDITHGP    230.00    62  62104 JUDITHGP    100.00*   62  1    112.2   100.0   112.2    --      --      --      --
20    62042 BILGEN I    13.800*   62  62101 BILINGSX    50.000    62  1     65.2    60.0   108.7    --      --      --      --
21    62043 MONTANA1    13.800    62  62059 MONTANA1    115.00*   62  1     40.2    40.0   100.6    --      --      --      --
22    62089 BROADVU     100.00    62  62106 HARLOWTN    100.00*   62  1     82.4    62.3   132.2    --      --      --      --
23    62089 BROADVU     100.00    62  62223 BROADVU     230.00*   62  1     98.9   100.0    98.9    --      --      --      --
24    62089 BROADVU     100.00    62  62223 BROADVU     230.00*   62  2     96.8   100.0    96.8    --      --      --      --
25    62104 JUDITHGP    100.00*   62  62233 JUDITGPT    100.00    62  1     98.6    62.4   158.0    --      --      --      --
26    62106 HARLOWTN    100.00*   62  62192 PANTROBE    100.00    62  1     79.8    62.0   128.7    --      --      --      --
27    62106 HARLOWTN    100.00    62  62227 TWO DOT     100.00*   62  1     62.5    57.2   109.3    --      --      --      --
28    62106 HARLOWTN    100.00    62  62233 JUDITGPT    100.00*   62  1     97.4    62.0   157.1    --      --      --      --
29    62137 BUTECORA    100.00*   62  62139 MONST TP    100.00    62  1     89.5    91.8    97.5    --      --      --      --
30    62227 TWO DOT     100.00    62  62235 MARTNSDA    100.00*   62  1     54.6    57.2    95.4    --      --      --      --
31
32
33
34    ------------------------------------------------------------------------------
35
36        PTI INTERACTIVE POWER SYSTEM SIMULATOR--PSS(tm)E    FRI, JUN 13 2008  18:07
37     2010 LA BASE CASE:  GTF=170, FP=62, GTF-3RVRS 230, NOGTF-OV
38     CTBWIND=100, VALWIND=104, HIGHWD=268, MCDC=150WE, CRO=77NS
39
40     BUSES WITH VOLTAGE GREATER THAN 1.0500:
41
42       BUS# X-- NAME --X BASKV AREA  V(PU)  V(KV)      BUS# X-- NAME --X BASKV AREA  V(PU)  V(KV)
43       1053 DELL-R      161.00   62 1.0626 171.08      1064 SHERIDAN    50.000   62 1.0634 53.171
44       2031 FAIRFILD    69.000   62 1.0605 73.174      3170 EXXONAUX    12.500   62 1.0515 13.144
45       3189 IVANHOE     2.4000   62 1.0597  2.543      3591 CL1&STR7    7.2000   62 1.0589  7.624
46       3977 CHROME*1    13.800   62 1.0525 14.525      3978 CHROMET1    13.800   62 1.0525 14.525
47       4905 GLNGRY*1    13.800   62 1.0658 14.708      4906 GLNGRYT1    13.800   62 1.0658 14.708
48       5007 SALMONID    69.000   62 1.0681 73.699      5027 TENDOY      69.000   62 1.0673 73.647
49       5028 LEMHI       69.000   62 1.0678 73.675      5059 DIVIDE-R    69.000   62 1.0552 72.812
50       5061 MELROSE     69.000   62 1.0560 72.866      5069 DVDE-R T    69.000   62 1.0557 72.843
51       5079 JONES-R     69.000   62 1.0559 72.857      5125 SLVR BOW    69.000   62 1.0562 72.880
52       5154 PTRSNFLT    69.000   62 1.0595 73.108      6025 BOZMN SS    50.000   62 1.0522 52.609
53       6026 BOZMN NS    50.000   62 1.0513 52.563      6027 EGALNS T    50.000   62 1.0513 52.564
54       6029 JACKRABT    69.000   62 1.0503 72.474      6032 SOURDOUG    50.000   62 1.0510 52.551
55       6033 MTELLS-R    50.000   62 1.0508 52.541      6034 MUIR        50.000   62 1.0503 52.516
56       6040 LIVNGSTN    69.000   62 1.0630 73.347      6043 BRAND S     69.000   62 1.0623 73.301
57       6049 PINECR-R    69.000   62 1.0597 73.118      6082 PATERSNT    50.000   62 1.0504 52.522
58       6125 BOZ SS 1    50.000   62 1.0522 52.609      6126 BOZ NS 1    50.000   62 1.0513 52.565
```

```
      6132 W SOURDH    50.000   62 1.0514 52.571      9052 THFALLPM    50.000   62 1.0555 52.777
      9070 FLODINLM    50.000   62 1.0544 52.721      9913 THFAPT*1    2.4000   62 1.0607  2.546
      9914 THFAPTT1    2.4000   62 1.0581  2.539     62012 TOWN2       500.00   62 1.1100 554.98
     62013 TOWN1       500.00   62 1.1100 554.98     62025 CANYON      7.0000   62 1.0853  7.597
     62030 PTRSNFLT    230.00   62 1.0693 245.94     62033 ANA BPA     115.00   62 1.0562 121.46
     62046 BROADVU     500.00   62 1.0821 541.03     62053 BROADV&2    500.00   62 1.0725 536.25
     62054 BROADV&1    500.00   62 1.0730 536.50     62057 COLSTRP     500.00   62 1.0800 540.00
     62154 RHONPOUL    100.00   62 1.0561 105.61     62348 EGALLTIN    50.000   62 1.0512 52.562
     62821 LIGNITE     230.00   62 1.0783 248.00     90106 JG_CLR      0.5750   62 1.0527  0.605


    BUSES WITH VOLTAGE LESS THAN 0.9500:

      BUS# X-- NAME --X BASKV AREA  V(PU)  V(KV)      BUS# X-- NAME --X BASKV AREA  V(PU)  V(KV)
      1102 ASIMI 2     13.800   62 0.9404 12.977      3085 RNDUPPMT    50.000   62 0.9389 46.943
      3086 ROUNDUP     50.000   62 0.9403 47.015      3090 GAGE        50.000   62 0.9331 46.655
      3091 MUSLSHLL    50.000   62 0.9250 46.249      3092 MTSTMINE    50.000   62 0.9215 46.075
      3093 MELSTONE    50.000   62 0.9181 45.907      3185 RONDUPPM    50.000   62 0.9377 46.885
      3192 MTNSTATP    50.000   62 0.9216 46.081      3286 ROUNDUP     69.000   62 0.9330 64.377
      5094 MCCONE-R    50.000   62 0.9154 45.769      5412 GRASRANG    50.000   62 0.9137 45.685
      5413 WNTT JCT    50.000   62 0.9285 46.427      5414 WINETT-R    50.000   62 0.9172 45.860
      5415 RONDUP-R    50.000   62 0.9389 46.945      5417 MCCONE T    50.000   62 0.9173 45.864
      5418 BOXLDR-R    50.000   62 0.9154 45.769      5420 SORNDP-R    50.000   62 0.9408 47.039
      5421 MERIDIAN    50.000   62 0.9409 47.044      7019 BOULDERA    69.000   62 0.9455 65.237
      7020 BOULDERB    69.000   62 0.9455 65.237      7023 ELKHORN     69.000   62 0.9446 65.177
      7029 JEFRSNSM    69.000   62 0.9460 65.277      7061 BOULDRAT    69.000   62 0.9459 65.270
      7065 BOULDTIE    69.000   62 0.9459 65.269      9054 SEELY-R     50.000   62 0.9447 47.236
     62126 LANDRSFK    230.00   62 0.9480 218.03     62192 PANTROBE    100.00   62 0.9336 93.360
     62215 LAVINAPT    100.00   62 0.9466 94.657     62216 LAVINAPM    100.00   62 0.9465 94.647
    62218 ROUNDUPM    100.00   62 0.9419 94.190
```

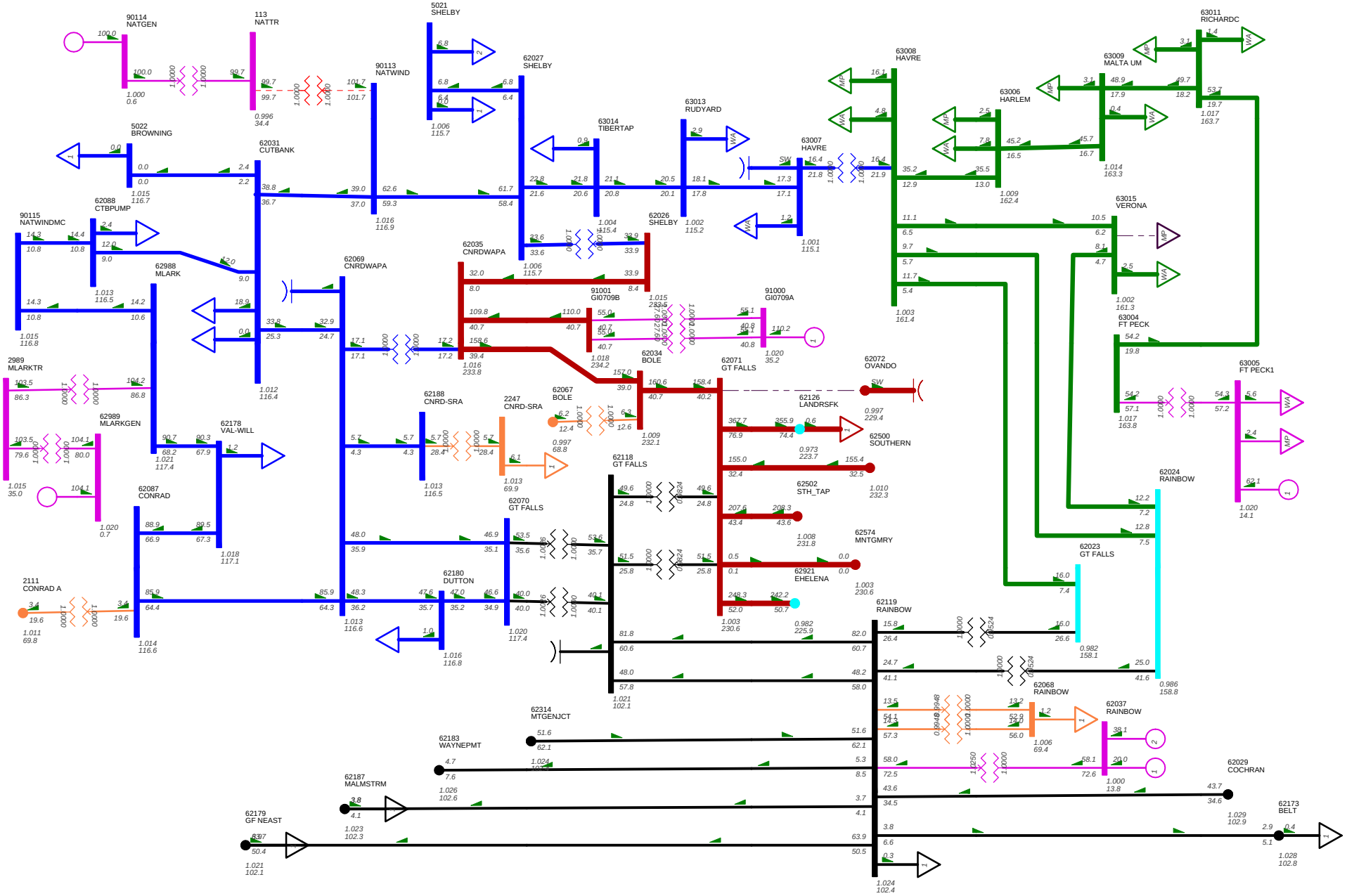

2010 LA BASE CASE: GTF=170, FP=62, GTF-3RVRS 230, NOGTF-OV
CTBWIND=100, VALWIND=104, HIGHWD=268, MCDC=150EW, CRO=77NS
FRI, JUN 13 2008 19:03
CONWIND=110 MW (N-1: BV-JG 230kV)

Bus - VOLTAGE (kV/PU)
Branch - MVA/% OF RATE A
Equipment - MVA

100.0%RATEA
0.990UV
1.040OV

kV: <=50.000 <=69.000 <=100.000 <=115.000
<=161.000 <=230.000 <=500.000 >500.000

PTI INTERACTIVE POWER SYSTEM SIMULATOR--PSS(tm)E FRI, JUN 13 2008 19:02
2010 LA BASE CASE: GTF=170, FP=62, GTF-3RVRS 230, NOGTF-OV
CTBWIND=100, VALWIND=104, HIGHWD=268, MCDC=150EW, CRO=77NS
OUTPUT FOR AREA 62 [MONTANA]
BRANCH LOADINGS ABOVE 95.0 % OF RATING (MVA FOR TRANSFORMERS, CURRENT FOR NON-TRANSFORMER BRANCHES):

X--------- FROM BUS ----------X				X---------- TO BUS ----------X						RATING SET A		RATING SET B		RATING SET C	
BUS#	X-- NAME --X	BASKV	AREA	BUS#	X-- NAME --X	BASKV	AREA	CKT	LOADING	RATING	PERCENT	RATING	PERCENT	RATING	PERCENT
107	KENFIELD	34.500*	62	90107	KFIELDGEN	0.5750	62	1	21.8	22.8	95.8	--	--	--	--
113	NATTR	34.500	62	90113	NATWIND	115.00*	62	1	101.7	100.0	101.7	--	--	--	--
3095	SUMATRA	69.000*	62	62584	SUMATRA	34.500	62	1	45.1	46.7	96.6	--	--	--	--
62011	HOLTER	6.6000*	62	62120	HOLTER	100.00	62	1	50.4	48.0	105.1	--	--	--	--
62025	CANYON	7.0000*	62	62122	CANYON F	100.00	62	1	59.2	62.0	95.5	--	--	--	--
62034	BOLE	230.00	62	62035	CNRDWAPA	230.00*	62	1	156.0	402.4	38.8	--	--	100.0	156.0
62034	BOLE	230.00*	62	62071	GT FALLS	230.00	62	1	159.1	394.4	40.3	--	--	100.0	159.1
62036	JUDITHGP	230.00	62	62104	JUDITHGP	100.00*	62	1	100.4	100.0	100.4	--	--	--	--
62042	BILGEN I	13.800*	62	62101	BILINGSX	50.000	62	1	65.2	60.0	108.7	--	--	--	--
62043	MONTANA1	13.800	62	62059	MONTANA1	115.00*	62	1	40.2	40.0	100.6	--	--	--	--
62089	BROADVU	100.00	62	62106	HARLOWTN	100.00*	62	1	72.9	62.3	117.0	--	--	--	--
62104	JUDITHGP	100.00*	62	62233	JUDITGPT	100.00	62	1	84.3	62.4	135.0	--	--	--	--
62106	HARLOWTN	100.00*	62	62192	PANTROBE	100.00	62	1	70.3	62.0	113.4	--	--	--	--
62106	HARLOWTN	100.00	62	62227	TWO DOT	100.00*	62	1	58.8	57.2	102.8	--	--	--	--
62106	HARLOWTN	100.00	62	62233	JUDITGPT	100.00*	62	1	83.1	62.0	134.0	--	--	--	--

---

PTI INTERACTIVE POWER SYSTEM SIMULATOR--PSS(tm)E FRI, JUN 13 2008 19:02
2010 LA BASE CASE: GTF=170, FP=62, GTF-3RVRS 230, NOGTF-OV
CTBWIND=100, VALWIND=104, HIGHWD=268, MCDC=150EW, CRO=77NS

BUSES WITH VOLTAGE GREATER THAN 1.0500:

BUS#	X-- NAME --X	BASKV	AREA	V(PU)	V(KV)	BUS#	X-- NAME --X	BASKV	AREA	V(PU)	V(KV)
1053	DELL-R	161.00	62	1.0590	170.50	1064	SHERIDAN	50.000	62	1.0537	52.684
2031	FAIRFILD	69.000	62	1.0685	73.727	3170	EXXONAUX	12.500	62	1.0515	13.144
3189	IVANHOE	2.4000	62	1.0621	2.549	3591	CL1&STR7	7.2000	62	1.0583	7.620
3977	CHROME*1	13.800	62	1.0524	14.523	3978	CHROMET1	13.800	62	1.0524	14.523
4905	GLNGRY*1	13.800	62	1.0787	14.885	4906	GLNGRYT1	13.800	62	1.0787	14.885
5007	SALMONID	69.000	62	1.0672	73.639	5027	TENDOY	69.000	62	1.0665	73.586
5028	LEMHI	69.000	62	1.0669	73.615	5154	PTRSNFLT	69.000	62	1.0587	73.048
6025	BOZMN SS	50.000	62	1.0525	52.627	6026	BOZMN NS	50.000	62	1.0516	52.579
6027	EGALNS T	50.000	62	1.0516	52.581	6029	JACKRABT	69.000	62	1.0509	72.511
6032	SOURDOUG	50.000	62	1.0514	52.569	6033	MTELLS-R	50.000	62	1.0512	52.558
6034	MUIR	50.000	62	1.0507	52.533	6040	LIVNGSTN	69.000	62	1.0620	73.279
6043	BRAND S	69.000	62	1.0614	73.233	6049	PINECR-R	69.000	62	1.0587	73.050
6082	PATERSNT	50.000	62	1.0509	52.543	6125	BOZ SS 1	50.000	62	1.0525	52.627
6126	BOZ NS 1	50.000	62	1.0516	52.581	6132	W SOURDH	50.000	62	1.0518	52.589
9052	THFALLPM	50.000	62	1.0561	52.805	9070	FLODINLM	50.000	62	1.0550	52.750
9913	THFAPT*1	2.4000	62	1.0613	2.547	9914	THFAPTT1	2.4000	62	1.0587	2.541
62012	TOWN2	500.00	62	1.1132	556.59	62013	TOWN1	500.00	62	1.1132	556.59
62025	CANYON	7.0000	62	1.1096	7.767	62030	PTRSNFLT	230.00	62	1.0684	245.74
62046	BROADVU	500.00	62	1.0837	541.86	62053	BROADV&2	500.00	62	1.0750	537.48

```
     62054 BROADV&1    500.00   62 1.0755 537.75     62057 COLSTRP     500.00   62 1.0800 540.00
     62348 EGALLTIN    50.000   62 1.0516 52.578     62821 LIGNITE     230.00   62 1.0775 247.83
     90106 JG_CLR      0.5750   62 1.0509  0.604

    BUSES WITH VOLTAGE LESS THAN 0.9500:

      BUS# X-- NAME --X BASKV AREA  V(PU)  V(KV)      BUS# X-- NAME --X BASKV AREA  V(PU)  V(KV)
      1102 ASIMI 2     13.800   62 0.9403 12.976      3085 RNDUPPMT    50.000   62 0.9493 47.465
      3090 GAGE        50.000   62 0.9436 47.181      3091 MUSLSHLL    50.000   62 0.9356 46.781
      3092 MTSTMINE    50.000   62 0.9322 46.610      3093 MELSTONE    50.000   62 0.9289 46.444
      3185 RONDUPPM    50.000   62 0.9481 47.407      3192 MTNSTATP    50.000   62 0.9323 46.616
      3286 ROUNDUP     69.000   62 0.9428 65.056      5094 MCCONE-R    50.000   62 0.9263 46.317
      5412 GRASRANG    50.000   62 0.9247 46.236      5413 WNTT JCT    50.000   62 0.9392 46.962
      5414 WINETT-R    50.000   62 0.9281 46.407      5415 RONDUP-R    50.000   62 0.9493 47.467
      5417 MCCONE T    50.000   62 0.9282 46.411      5418 BOXLDR-R    50.000   62 0.9263 46.317
   62192 PANTROBE    100.00   62 0.9485 94.853
```

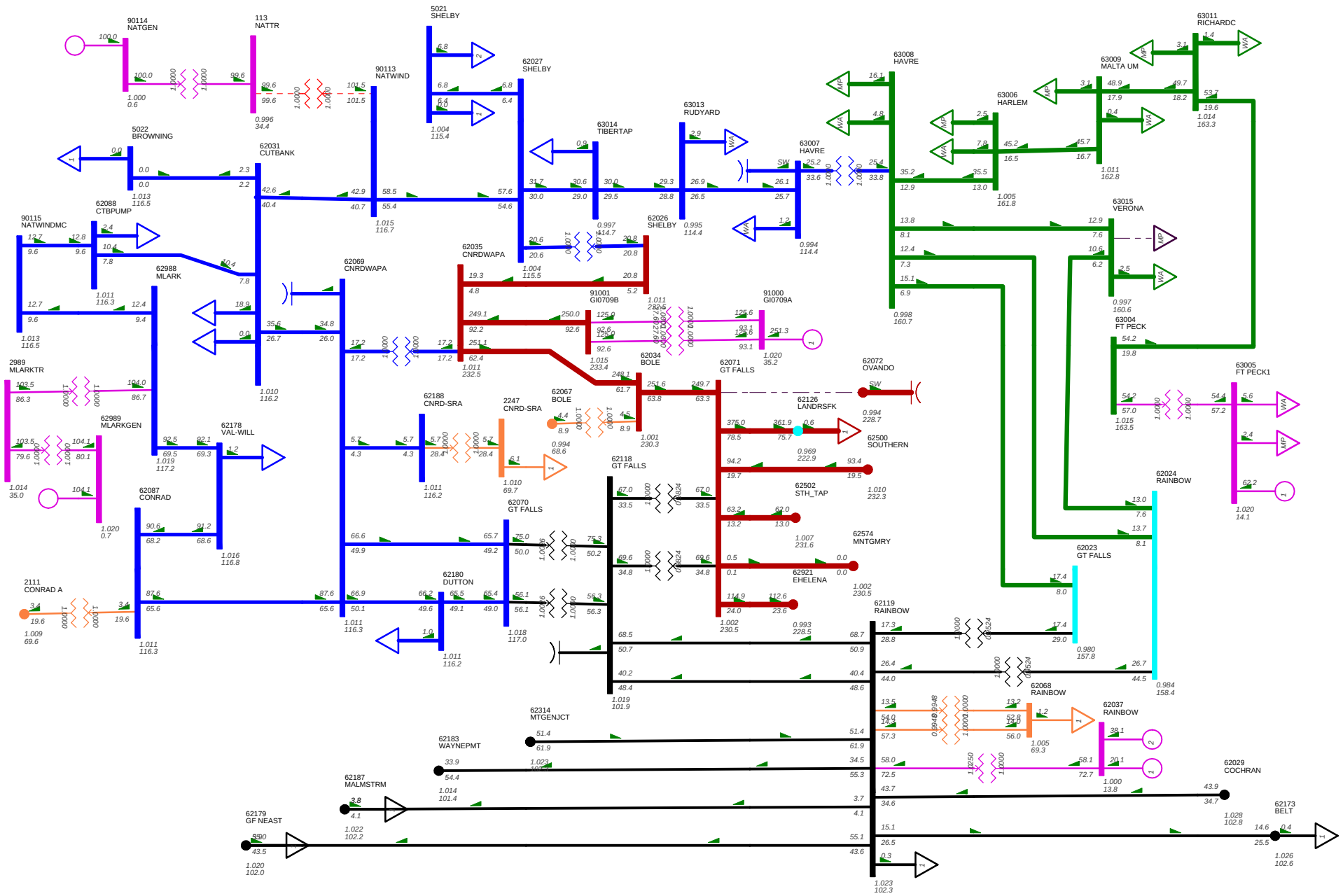

2010 LA BASE CASE: GTF=170, FP=62, GTF-3RVRS 230, NOGTF-OV
CTBWIND=100, VALWIND=104, HIGHWD=268, MCDC=150WE, CRO=77NS
FRI, JUN 13 2008 18:03
CONWIND=250 MW (N-1: EH-3R 230kV)

Bus - VOLTAGE (kV/PU)
Branch - MVA/% OF RATE A
Equipment - MVA

100.0%RATEA
0.990UV
1.040OV

kV: <=50.000 <=69.000 <=100.000 <=115.000
<=161.000 <=230.000 <=500.000 >500.000

PTI INTERACTIVE POWER SYSTEM SIMULATOR--PSS(tm)E FRI, JUN 13 2008 18:04
2010 LA BASE CASE: GTF=170, FP=62, GTF-3RVRS 230, NOGTF-OV
CTBWIND=100, VALWIND=104, HIGHWD=268, MCDC=150WE, CRO=77NS
OUTPUT FOR AREA 62 [MONTANA]
BRANCH LOADINGS ABOVE 95.0 % OF RATING (MVA FOR TRANSFORMERS, CURRENT FOR NON-TRANSFORMER BRANCHES):

X--------- FROM BUS ----------X				X---------- TO BUS ----------X						RATING SET A		RATING SET B		RATING SET C	
BUS#	X-- NAME --	X BASKV	AREA	BUS#	X-- NAME --	X BASKV	AREA	CKT	LOADING	RATING	PERCENT	RATING	PERCENT	RATING	PERCENT
106	JGW_TRAN	34.500*	62	90105	JGWIND	230.00	62	1	193.4	200.0	96.7	--	--	--	--
107	KENFIELD	34.500*	62	90107	KFIELDGEN	0.5750	62	1	21.8	22.8	95.7	--	--	--	--
113	NATTR	34.500	62	90113	NATWIND	115.00*	62	1	101.5	100.0	101.5	--	--	--	--
3095	SUMATRA	69.000*	62	62584	SUMATRA	34.500	62	1	45.3	46.7	96.9	--	--	--	--
62011	HOLTER	6.6000*	62	62120	HOLTER	100.00	62	1	50.4	48.0	105.1	--	--	--	--
62025	CANYON	7.0000*	62	62122	CANYON F	100.00	62	1	59.2	62.0	95.5	--	--	--	--
62034	BOLE	230.00	62	62035	CNRDWAPA	230.00*	62	1	248.4	402.4	61.7	--	--	100.0	248.4
62034	BOLE	230.00*	62	62071	GT FALLS	230.00	62	1	251.3	394.4	63.7	--	--	100.0	251.3
62042	BILGEN I	13.800*	62	62101	BILINGSX	50.000	62	1	65.2	60.0	108.7	--	--	--	--
62043	MONTANA1	13.800	62	62059	MONTANA1	115.00*	62	1	40.2	40.0	100.6	--	--	--	--
62073	TRIDENT	100.00	62	62244	EUSTIS	100.00*	62	1	60.5	62.0	97.6	--	--	--	--
62106	HARLOWTN	100.00	62	62227	TWO DOT	100.00*	62	1	69.8	57.2	122.1	--	--	--	--
62120	HOLTER	100.00*	62	62262	CANYONCR	100.00	62	1	79.0	83.0	95.2	--	--	--	--
62121	E HELENA	100.00*	62	62264	CONLIM T	100.00	62	1	67.3	57.2	117.7	--	--	--	--
62121	E HELENA	100.00*	62	62276	HELSS TB	100.00	62	1	88.7	91.8	96.6	--	--	--	--
62121	E HELENA	100.00*	62	62921	EHELENA	230.00	62	1	113.1	100.0	113.1	--	--	--	--
62137	BUTECORA	100.00*	62	62139	MONST TP	100.00	62	1	114.8	91.8	125.1	--	--	--	--
62227	TWO DOT	100.00	62	62235	MARTNSDA	100.00*	62	1	62.4	57.2	109.0	--	--	--	--
62244	EUSTIS	100.00	62	62267	CROWCREK	100.00*	62	1	60.8	62.0	98.1	--	--	--	--
62264	CONLIM T	100.00*	62	62265	TOWNSEND	100.00	62	1	66.2	57.2	115.7	--	--	--	--
62265	TOWNSEND	100.00*	62	62266	TOSTON	100.00	62	1	62.7	62.0	101.1	--	--	--	--
62266	TOSTON	100.00*	62	62286	BRDWTR T	100.00	62	1	60.5	62.4	96.9	--	--	--	--
62267	CROWCREK	100.00	62	62286	BRDWTR T	100.00*	62	1	62.0	62.4	99.4	--	--	--	--

---

PTI INTERACTIVE POWER SYSTEM SIMULATOR--PSS(tm)E FRI, JUN 13 2008 18:04
2010 LA BASE CASE: GTF=170, FP=62, GTF-3RVRS 230, NOGTF-OV
CTBWIND=100, VALWIND=104, HIGHWD=268, MCDC=150WE, CRO=77NS

BUSES WITH VOLTAGE GREATER THAN 1.0500:

BUS#	X-- NAME --	X BASKV	AREA	V(PU)	V(KV)	BUS#	X-- NAME --	X BASKV	AREA	V(PU)	V(KV)
1053	DELL-R	161.00	62	1.0587	170.45	1064	SHERIDAN	50.000	62	1.0538	52.690
2031	FAIRFILD	69.000	62	1.0676	73.664	3170	EXXONAUX	12.500	62	1.0515	13.144
3189	IVANHOE	2.4000	62	1.0654	2.557	3591	CL1&STR7	7.2000	62	1.0592	7.626
3977	CHROME*1	13.800	62	1.0510	14.504	3978	CHROMET1	13.800	62	1.0510	14.504
5007	SALMONID	69.000	62	1.0681	73.697	5027	TENDOY	69.000	62	1.0673	73.645
5028	LEMHI	69.000	62	1.0677	73.674	5154	PTRSNFLT	69.000	62	1.0595	73.106
6025	BOZMN SS	50.000	62	1.0563	52.815	6026	BOZMN NS	50.000	62	1.0554	52.769
6027	EGALNS T	50.000	62	1.0554	52.770	6029	JACKRABT	69.000	62	1.0544	72.754
6032	SOURDOUG	50.000	62	1.0552	52.758	6033	MTELLS-R	50.000	62	1.0550	52.748
6034	MUIR	50.000	62	1.0545	52.723	6040	LIVNGSTN	69.000	62	1.0645	73.454
6043	BRAND S	69.000	62	1.0639	73.408	6049	PINECR-R	69.000	62	1.0612	73.225

```
      6071 MEADWVIL    69.000   62 1.0503 72.472      6078 BZRIVERS    50.000   62 1.0502 52.511
      6082 PATERSNT    50.000   62 1.0545 52.727      6084 PATERSON    50.000   62 1.0520 52.598
      6125 BOZ SS 1    50.000   62 1.0563 52.815      6126 BOZ NS 1    50.000   62 1.0554 52.770
      6132 W SOURDH    50.000   62 1.0556 52.778      9052 THFALLPM    50.000   62 1.0558 52.789
      9070 FLODINLM    50.000   62 1.0547 52.733      9913 THFAPT*1    2.4000   62 1.0610  2.546
      9914 THFAPTT1    2.4000   62 1.0583  2.540     62012 TOWN2       500.00   62 1.1098 554.89
     62013 TOWN1       500.00   62 1.1098 554.89     62025 CANYON      7.0000   62 1.1259  7.882
     62030 PTRSNFLT    230.00   62 1.0693 245.93     62046 BROADVU     500.00   62 1.0810 540.48
     62053 BROADV&2    500.00   62 1.0709 535.44     62054 BROADV&1    500.00   62 1.0713 535.67
     62057 COLSTRP     500.00   62 1.0800 540.00     62348 EGALLTIN    50.000   62 1.0553 52.767
     62349 JACKRABT    50.000   62 1.0528 52.639     62821 LIGNITE     230.00   62 1.0788 248.11
     90106 JG_CLR      0.5750   62 1.0500  0.604

    BUSES WITH VOLTAGE LESS THAN 0.9500:

      BUS# X-- NAME --X BASKV AREA  V(PU)  V(KV)      BUS# X-- NAME --X BASKV AREA  V(PU)  V(KV)
      1102 ASIMI 2     13.800   62 0.9385 12.951      3092 MTSTMINE    50.000   62 0.9469 47.343
      3093 MELSTONE    50.000   62 0.9436 47.180      3192 MTNSTATP    50.000   62 0.9470 47.349
      5094 MCCONE-R    50.000   62 0.9414 47.070      5412 GRASRANG    50.000   62 0.9398 46.991
      5414 WINETT-R    50.000   62 0.9432 47.158      5417 MCCONE T    50.000   62 0.9432 47.162
      5418 BOXLDR-R    50.000   62 0.9414 47.070
```

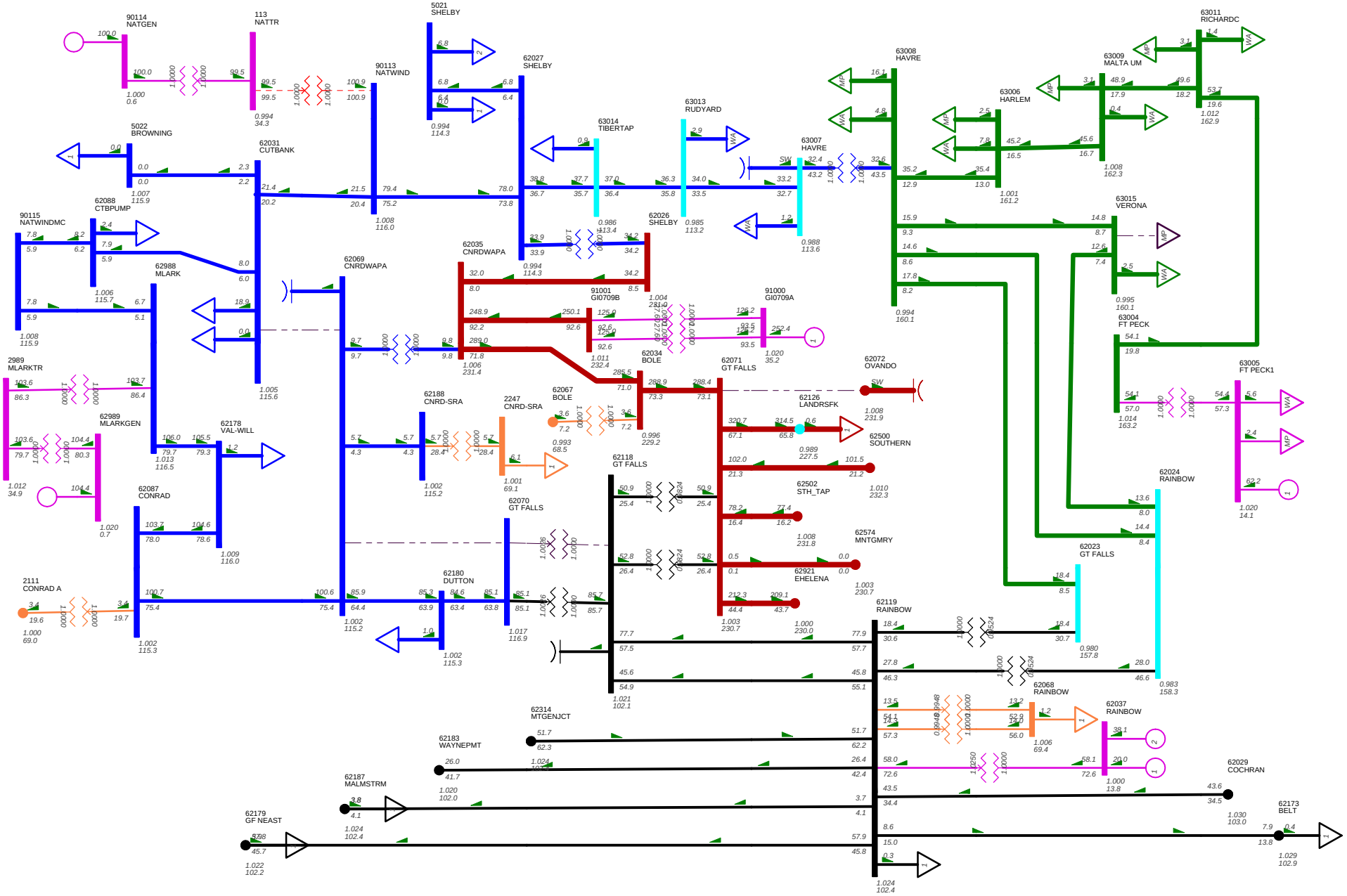

2010 LA BASE CASE: GTF=170, FP=62, GTF-3RVRS 230, NOGTF-OV
CTBWIND=100, VALWIND=104, HIGHWD=268, MCDC=150EW, CRO=77NS
FRI, JUN 13 2008 19:31
CONWIND=250 MW w/o NWE 115 (N-0)

Bus - VOLTAGE (kV/PU)
Branch - MVA/% OF RATE A
Equipment - MVA

100.0%RATEA
0.990UV
1.040OV

kV: <=50.000 <=69.000 <=100.000 <=115.000
<=161.000 <=230.000 <=500.000 >500.000

```
 1
 2
 3  ------------------------------------------------------------------------------
 4
 5      PTI INTERACTIVE POWER SYSTEM SIMULATOR--PSS(tm)E    FRI, JUN 13 2008  19:28
 6   2010 LA BASE CASE:  GTF=170, FP=62, GTF-3RVRS 230, NOGTF-OV
 7   CTBWIND=100, VALWIND=104, HIGHWD=268, MCDC=150EW, CRO=77NS
 8                          OUTPUT FOR AREA 62 [MONTANA     ]
 9   BRANCH LOADINGS ABOVE  95.0 % OF RATING (MVA FOR TRANSFORMERS, CURRENT FOR NON-TRANSFORMER BRANCHES):
10
11   X--------- FROM BUS ----------X X---------- TO BUS -----------X               RATING SET A    RATING SET B    RATING SET C
12     BUS# X-- NAME --X BASKV  AREA   BUS# X-- NAME --X BASKV  AREA CKT LOADING  RATING PERCENT  RATING PERCENT  RATING PERCENT
13      106 JGW_TRAN    34.500*   62  90105 JGWIND      230.00    62  1    192.1   200.0    96.1    --      --      --      --
14      107 KENFIELD    34.500*   62  90107 KFIELDGEN   0.5750    62  1     21.8    22.8    95.8    --      --      --      --
15      113 NATTR       34.500    62  90113 NATWIND     115.00*   62  1    100.9   100.0   100.9    --      --      --      --
16     3095 SUMATRA     69.000*   62  62584 SUMATRA     34.500    62  1     45.4    46.7    97.1    --      --      --      --
17    62011 HOLTER      6.6000*   62  62120 HOLTER      100.00    62  1     50.4    48.0   105.1    --      --      --      --
18    62025 CANYON      7.0000*   62  62122 CANYON F    100.00    62  1     59.2    62.0    95.5    --      --      --      --
19    62027 SHELBY      115.00    62  90113 NATWIND     115.00*   62  1     78.7   105.6    74.6    --      --      80.0    98.4
20    62034 BOLE        230.00    62  62035 CNRDWAPA    230.00*   62  1    287.3   402.4    71.4    --      --     100.0   287.3
21    62034 BOLE        230.00*   62  62071 GT FALLS    230.00    62  1    290.0   394.4    73.5    --      --     100.0   290.0
22    62042 BILGEN I    13.800*   62  62101 BILINGSX    50.000    62  1     65.2    60.0   108.7    --      --      --      --
23    62043 MONTANA1    13.800    62  62059 MONTANA1    115.00*   62  1     40.2    40.0   100.6    --      --      --      --
24    62106 HARLOWTN    100.00    62  62227 TWO DOT     100.00*   62  1     64.3    57.2   112.5    --      --      --      --
25    62227 TWO DOT     100.00    62  62235 MARTNSDA    100.00*   62  1     57.1    57.2    99.8    --      --      --      --
26
27
28
29    ------------------------------------------------------------------------------
30
31        PTI INTERACTIVE POWER SYSTEM SIMULATOR--PSS(tm)E    FRI, JUN 13 2008  19:28
32     2010 LA BASE CASE:  GTF=170, FP=62, GTF-3RVRS 230, NOGTF-OV
33     CTBWIND=100, VALWIND=104, HIGHWD=268, MCDC=150EW, CRO=77NS
34
35     BUSES WITH VOLTAGE GREATER THAN 1.0500:
36
37       BUS# X-- NAME --X BASKV AREA  V(PU)  V(KV)      BUS# X-- NAME --X BASKV AREA  V(PU)  V(KV)
38       1053 DELL-R      161.00   62 1.0639 171.29      1064 SHERIDAN    50.000   62 1.0613 53.064
39       2031 FAIRFILD    69.000   62 1.0690 73.762      3170 EXXONAUX    12.500   62 1.0516 13.144
40       3189 IVANHOE     2.4000   62 1.0672  2.561      3591 CL1&STR7    7.2000   62 1.0585  7.621
41       3977 CHROME*1    13.800   62 1.0528 14.529      3978 CHROMET1    13.800   62 1.0528 14.529
42       5007 SALMONID    69.000   62 1.0710 73.896      5027 TENDOY      69.000   62 1.0702 73.844
43       5028 LEMHI       69.000   62 1.0706 73.872      5154 PTRSNFLT    69.000   62 1.0624 73.304
44       6018 MANHATNT    50.000   62 1.0500 52.501      6022 BELGRADE    50.000   62 1.0516 52.578
45       6025 BOZMN SS    50.000   62 1.0614 53.071      6026 BOZMN NS    50.000   62 1.0604 53.022
46       6027 EGALNS T    50.000   62 1.0605 53.023      6029 JACKRABT    69.000   62 1.0596 73.115
47       6032 SOURDOUG    50.000   62 1.0602 53.012      6033 MTELLS-R    50.000   62 1.0600 53.002
48       6034 MUIR        50.000   62 1.0595 52.977      6035 CLYDPARK    50.000   62 1.0519 52.593
49       6040 LIVNGSTN    69.000   62 1.0685 73.723      6043 BRAND S     69.000   62 1.0678 73.678
50       6049 PINECR-R    69.000   62 1.0652 73.496      6070 BGTMBERA    50.000   62 1.0523 52.614
51       6071 MEADWVIL    69.000   62 1.0556 72.837      6078 BZRIVERS    50.000   62 1.0553 52.766
52       6082 PATERSNT    50.000   62 1.0597 52.983      6084 PATERSON    50.000   62 1.0571 52.855
53       6119 AMSTER T    50.000   62 1.0538 52.688      6120 AMSTRDAM    50.000   62 1.0507 52.534
54       6125 BOZ SS 1    50.000   62 1.0614 53.071      6126 BOZ NS 1    50.000   62 1.0605 53.023
55       6132 W SOURDH    50.000   62 1.0606 53.032      9052 THFALLPM    50.000   62 1.0561 52.807
56       9070 FLODINLM    50.000   62 1.0550 52.752      9913 THFAPT*1    2.4000   62 1.0613  2.547
57       9914 THFAPTT1    2.4000   62 1.0587  2.541     62012 TOWN2       500.00   62 1.1123 556.17
58      62013 TOWN1       500.00   62 1.1123 556.17     62025 CANYON      7.0000   62 1.1283  7.898
```

```
 62030 PTRSNFLT    230.00   62 1.0721 246.57     62046 BROADVU     500.00   62 1.0828 541.40
 62053 BROADV&2    500.00   62 1.0736 536.82     62054 BROADV&1    500.00   62 1.0742 537.08
 62057 COLSTRP     500.00   62 1.0800 540.00     62075 MILLERCK    69.000   62 1.0543 72.744
 62348 EGALLTIN    50.000   62 1.0604 53.020     62349 JACKRABT    50.000   62 1.0580 52.900
 62821 LIGNITE     230.00   62 1.0779 247.92     90106 JG_CLR      0.5750   62 1.0592  0.609


BUSES WITH VOLTAGE LESS THAN 0.9500:

  BUS# X-- NAME --X BASKV AREA  V(PU)  V(KV)      BUS# X-- NAME --X BASKV AREA  V(PU)  V(KV)
  5094 MCCONE-R    50.000   62 0.9494 47.471      5412 GRASRANG    50.000   62 0.9479 47.394
5418 BOXLDR-R    50.000   62 0.9494 47.471
```

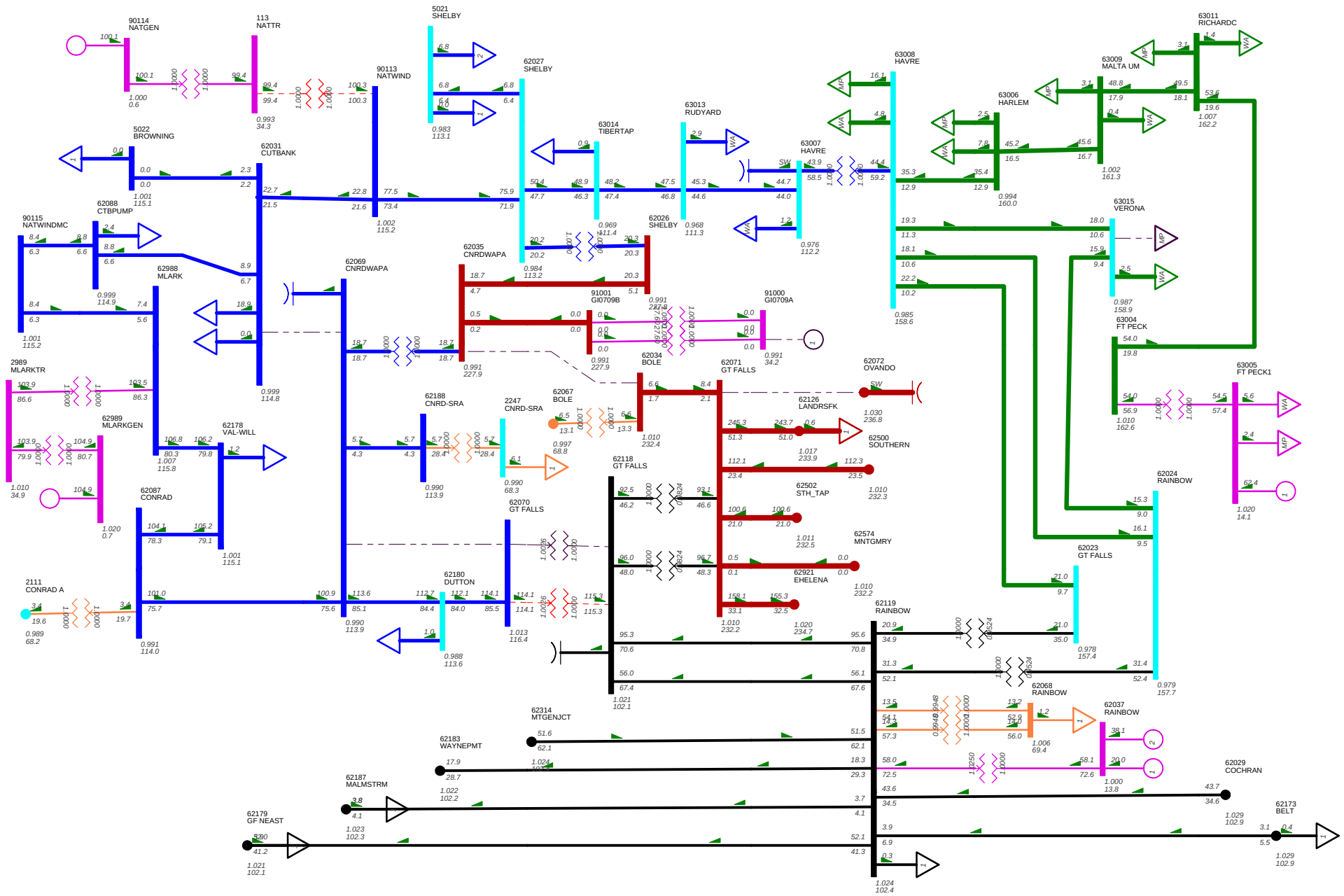

2010 LA BASE CASE: GTF=170, FP=62, GTF-3RVRS 230, NOGTF-OV
CTBWIND=100, VALWIND=104, HIGHWD=268, MCDC=150EW, CRO=77NS
MON, JUN 16 2008 17:48
CONWIND=0 MW w/o NWE 115 kV (N-1: CON-BOL 230kV)

Bus - VOLTAGE (kV/PU)
Branch - MVA/% OF RATE A
Equipment - MVA

100.0%RATEA
0.990UV
1.040OV

kV: <=50.000 <=69.000 <=100.000 <=115.000
<=161.000 <=230.000 <=500.000 >500.000

```
 1
 2
 3  ------------------------------------------------------------------------------
 4
 5      PTI INTERACTIVE POWER SYSTEM SIMULATOR--PSS(tm)E    FRI, JUN 13 2008  20:03
 6   2010 LA BASE CASE:  GTF=170, FP=62, GTF-3RVRS 230, NOGTF-OV
 7   CTBWIND=100, VALWIND=104, HIGHWD=268, MCDC=150EW, CRO=77NS
 8                          OUTPUT FOR AREA 62 [MONTANA     ]
 9   BRANCH LOADINGS ABOVE  95.0 % OF RATING (MVA FOR TRANSFORMERS, CURRENT FOR NON-TRANSFORMER BRANCHES):
10
11   X--------- FROM BUS ----------X X---------- TO BUS -----------X               RATING SET A    RATING SET B    RATING SET C
12     BUS# X-- NAME --X BASKV  AREA   BUS# X-- NAME --X BASKV  AREA CKT LOADING  RATING PERCENT  RATING PERCENT  RATING PERCENT
13      107 KENFIELD    34.500*   62  90107 KFIELDGEN   0.5750    62  1     21.8    22.8    95.8    --      --      --      --
14      113 NATTR       34.500    62  90113 NATWIND     115.00*   62  1    100.3   100.0   100.3    --      --      --      --
15     3095 SUMATRA     69.000*   62  62584 SUMATRA     34.500    62  1     45.5    46.7    97.4    --      --      --      --
16    62011 HOLTER      6.6000*   62  62120 HOLTER      100.00    62  1     49.1    48.0   102.3    --      --      --      --
17    62027 SHELBY      115.00    62  90113 NATWIND     115.00*   62  1     77.4   105.6    73.3    --      --      80.0    96.7
18    62042 BILGEN I    13.800*   62  62101 BILINGSX    50.000    62  1     65.2    60.0   108.7    --      --      --      --
19    62043 MONTANA1    13.800    62  62059 MONTANA1    115.00*   62  1     40.2    40.0   100.5    --      --      --      --
20    62070 GT FALLS    115.00    62  62118 GT FALLS    100.00*   62  1    115.3   100.0   115.3    --      --      --      --
21    62106 HARLOWTN    100.00    62  62227 TWO DOT     100.00*   62  1     58.4    57.2   102.1    --      --      --      --
22
23
24
25    ------------------------------------------------------------------------------
26
27        PTI INTERACTIVE POWER SYSTEM SIMULATOR--PSS(tm)E    FRI, JUN 13 2008  20:03
28     2010 LA BASE CASE:  GTF=170, FP=62, GTF-3RVRS 230, NOGTF-OV
29     CTBWIND=100, VALWIND=104, HIGHWD=268, MCDC=150EW, CRO=77NS
30
31     BUSES WITH VOLTAGE GREATER THAN 1.0500:
32
33       BUS# X-- NAME --X BASKV AREA  V(PU)  V(KV)      BUS# X-- NAME --X BASKV AREA  V(PU)  V(KV)
34       1053 DELL-R      161.00   62 1.0750 173.08      1064 SHERIDAN    50.000   62 1.0757 53.787
35       2031 FAIRFILD    69.000   62 1.0685 73.724      3170 EXXONAUX    12.500   62 1.0516 13.145
36       3189 IVANHOE     2.4000   62 1.0692  2.566      3591 CL1&STR7    7.2000   62 1.0572  7.612
37       3977 CHROME*1    13.800   62 1.0545 14.552      3978 CHROMET1    13.800   62 1.0545 14.552
38       5007 SALMONID    69.000   62 1.0811 74.596      5027 TENDOY      69.000   62 1.0803 74.543
39       5028 LEMHI       69.000   62 1.0808 74.573      5059 DIVIDE-R    69.000   62 1.0541 72.735
40       5061 MELROSE     69.000   62 1.0549 72.789      5069 DVDE-R T    69.000   62 1.0546 72.766
41       5079 JONES-R     69.000   62 1.0548 72.780      5125 SLVR BOW    69.000   62 1.0551 72.803
42       5154 PTRSNFLT    69.000   62 1.0724 73.998      6018 MANHATNT    50.000   62 1.0637 53.183
43       6019 MANHATPM    50.000   62 1.0625 53.123      6022 BELGRADE    50.000   62 1.0652 53.259
44       6025 BOZMN SS    50.000   62 1.0749 53.746      6026 BOZMN NS    50.000   62 1.0738 53.692
45       6027 EGALNS T    50.000   62 1.0739 53.693      6029 JACKRABT    69.000   62 1.0733 74.057
46       6030 LIVIN WS    50.000   62 1.0537 52.685      6032 SOURDOUG    50.000   62 1.0737 53.686
47       6033 MTELLS-R    50.000   62 1.0735 53.676      6034 MUIR        50.000   62 1.0730 53.652
48       6035 CLYDPARK    50.000   62 1.0628 53.140      6036 LIVNGSTN    50.000   62 1.0538 52.692
49       6037 CLYDPK-R    50.000   62 1.0603 53.013      6038 LIVIN NS    50.000   62 1.0550 52.752
50       6039 LIVING-R    50.000   62 1.0538 52.692      6040 LIVNGSTN    69.000   62 1.0792 74.464
51       6043 BRAND S     69.000   62 1.0785 74.419      6048 BGTIMB-R    50.000   62 1.0569 52.847
52       6049 PINECR-R    69.000   62 1.0759 74.239      6057 SPRNGL T    50.000   62 1.0540 52.700
53       6060 SWINGLEY    50.000   62 1.0537 52.685      6061 E & W       50.000   62 1.0535 52.677
54       6062 HUNTER      50.000   62 1.0534 52.672      6063 SPRGDALE    50.000   62 1.0532 52.662
55       6065 BGTIMBER    50.000   62 1.0555 52.775      6066 MELVILLE    50.000   62 1.0569 52.847
56       6070 BGTMBERA    50.000   62 1.0590 52.951      6071 MEADWVIL    69.000   62 1.0694 73.789
57       6073 HOL PUMP    50.000   62 1.0538 52.690      6074 HAYHOOK     50.000   62 1.0606 53.032
58       6078 BZRIVERS    50.000   62 1.0688 53.441      6082 PATERSNT    50.000   62 1.0732 53.661
```

```
59       6084 PATERSON    50.000   62 1.0707 53.535      6089 WILSAL-R    50.000   62 1.0592 52.960
60       6090 DOWNER      50.000   62 1.0535 52.676      6093 HOLPUM T    50.000   62 1.0538 52.690
61       6119 AMSTER T    50.000   62 1.0674 53.370      6120 AMSTRDAM    50.000   62 1.0644 53.218
62       6125 BOZ SS 1    50.000   62 1.0749 53.746      6126 BOZ NS 1    50.000   62 1.0739 53.694
63       6132 W SOURDH    50.000   62 1.0741 53.706      6931 EMIGRT*1    13.800   62 1.0549 14.557
64       6932 EMIGRTT1    13.800   62 1.0549 14.557      9052 THFALLPM    50.000   62 1.0577 52.884
65       9057 LOLO        69.000   62 1.0592 73.081      9060 MACLAY      69.000   62 1.0597 73.121
66       9069 LOLO-R      69.000   62 1.0592 73.081      9070 FLODINLM    50.000   62 1.0566 52.829
67       9913 THFAPT*1    2.4000   62 1.0629  2.551      9914 THFAPTT1    2.4000   62 1.0602  2.545
68      62012 TOWN2       500.00   62 1.1197 559.87     62013 TOWN1       500.00   62 1.1197 559.87
69      62025 CANYON      7.0000   62 1.1203  7.842     62030 PTRSNFLT    230.00   62 1.0819 248.84
70      62033 ANA BPA     115.00   62 1.0551 121.34     62046 BROADVU     500.00   62 1.0867 543.34
71      62053 BROADV&2    500.00   62 1.0794 539.71     62054 BROADV&1    500.00   62 1.0800 540.00
72      62057 COLSTRP     500.00   62 1.0800 540.00     62075 MILLERCK    69.000   62 1.0647 73.465
73      62084 DILLON S    161.00   62 1.0554 169.92     62154 RHONPOUL    100.00   62 1.0550 105.50
74      62158 SHERDNMT    161.00   62 1.0533 169.58     62348 EGALLTIN    50.000   62 1.0738 53.689
75      62349 JACKRABT    50.000   62 1.0716 53.580     62821 LIGNITE     230.00   62 1.0762 247.53
76      90106 JG_CLR      0.5750   62 1.0546  0.606
77
78
79     BUSES WITH VOLTAGE LESS THAN 0.9500:
80
81       BUS# X-- NAME --X BASKV AREA  V(PU)  V(KV)      BUS# X-- NAME --X BASKV AREA  V(PU)  V(KV)
82
83                                                * NONE *
```

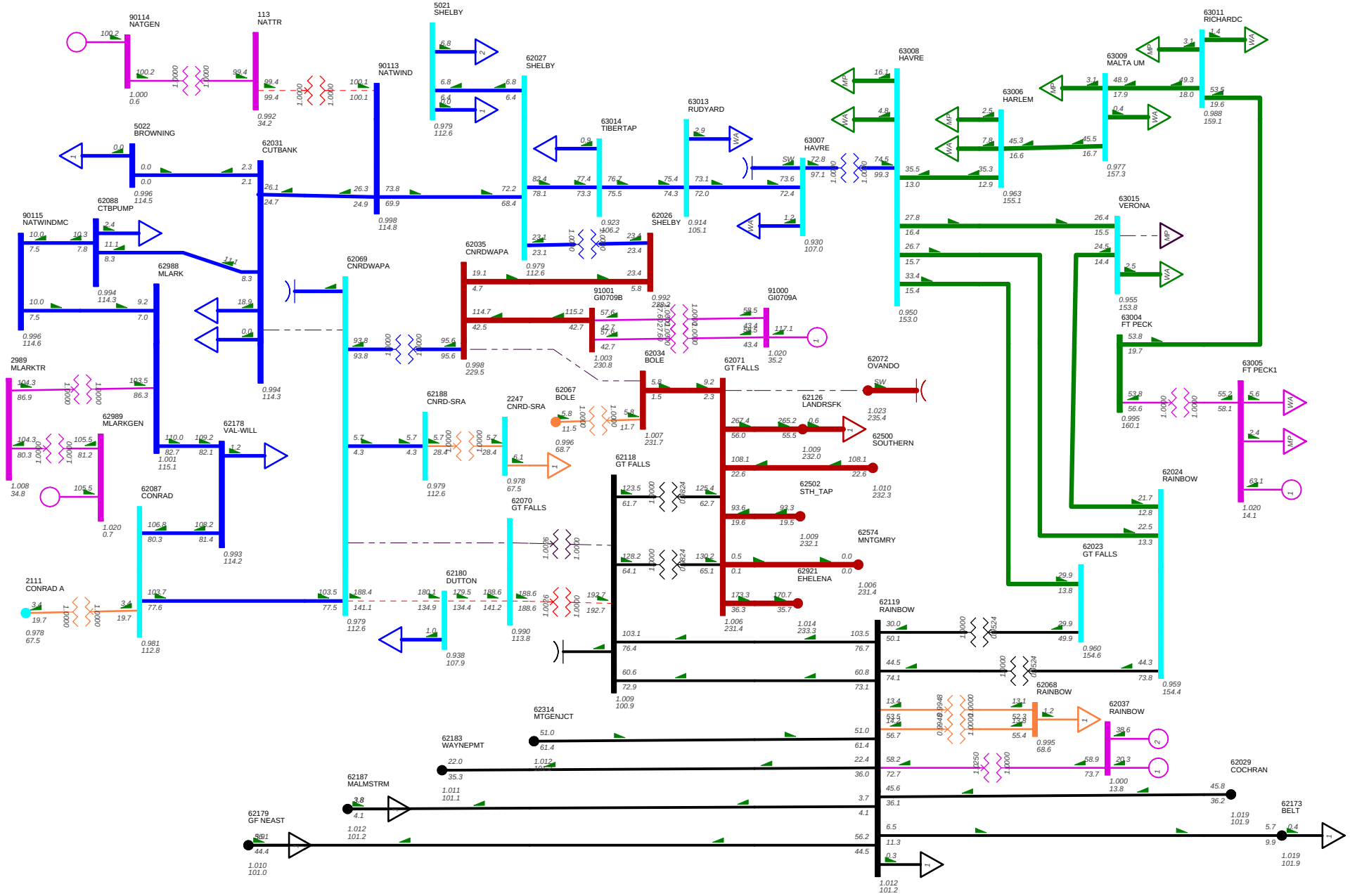

2010 LA BASE CASE: GTF=170, FP=62, GTF-3RVRS 230, NOGTF-OV
CTBWIND=100, VALWIND=104, HIGHWD=268, MCDC=150EW, CRO=77NS
FRI, JUN 13 2008 19:54
CONWIND=110 MW w/o NWE 115 (N-1: CON-BOL 230kV)

Bus - VOLTAGE (kV/PU)
Branch - MVA/% OF RATE A
Equipment - MVA

100.0%RATEA
0.990UV
1.040OV

kV: <=50.000 <=69.000 <=100.000 <=115.000
<=161.000 <=230.000 <=500.000 >500.000

```
 1
 2
 3  ------------------------------------------------------------------------------
 4
 5      PTI INTERACTIVE POWER SYSTEM SIMULATOR--PSS(tm)E    FRI, JUN 13 2008  19:44
 6   2010 LA BASE CASE:  GTF=170, FP=62, GTF-3RVRS 230, NOGTF-OV
 7   CTBWIND=100, VALWIND=104, HIGHWD=268, MCDC=150EW, CRO=77NS
 8                          OUTPUT FOR AREA 62 [MONTANA     ]
 9   BRANCH LOADINGS ABOVE  95.0 % OF RATING (MVA FOR TRANSFORMERS, CURRENT FOR NON-TRANSFORMER BRANCHES):
10
11   X--------- FROM BUS ----------X X---------- TO BUS -----------X                RATING SET A    RATING SET B    RATING SET C
12     BUS# X-- NAME --X BASKV  AREA   BUS# X-- NAME --X BASKV  AREA CKT LOADING  RATING PERCENT  RATING PERCENT  RATING PERCENT
13      113 NATTR       34.500    62  90113 NATWIND     115.00*   62  1    100.1   100.0   100.1    --      --      --      --
14     3095 SUMATRA     69.000*   62  62584 SUMATRA     34.500    62  1     45.5    46.7    97.3    --      --      --      --
15    62011 HOLTER      6.6000*   62  62120 HOLTER      100.00    62  1     50.1    48.0   104.4    --      --      --      --
16    62025 CANYON      7.0000*   62  62122 CANYON F    100.00    62  1     59.1    62.0    95.2    --      --      --      --
17    62035 CNRDWAPA    230.00*   62  62069 CNRDWAPA    115.00    62  1     95.6   100.0    95.6    --      --      --      --
18    62042 BILGEN I    13.800*   62  62101 BILINGSX    50.000    62  1     65.2    60.0   108.7    --      --      --      --
19    62043 MONTANA1    13.800    62  62059 MONTANA1    115.00*   62  1     40.2    40.0   100.5    --      --      --      --
20    62069 CNRDWAPA    115.00*   62  62180 DUTTON      115.00    62  1    192.4   133.5   144.1    --      --      --      --
21    62070 GT FALLS    115.00    62  62118 GT FALLS    100.00*   62  1    192.7   100.0   192.7    --      --      --      --
22    62070 GT FALLS    115.00    62  62180 DUTTON      115.00*   62  1    191.3   133.5   143.3    --      --      --      --
23    62106 HARLOWTN    100.00    62  62227 TWO DOT     100.00*   62  1     60.9    57.2   106.5    --      --      --      --
24
25
26
27    ------------------------------------------------------------------------------
28
29        PTI INTERACTIVE POWER SYSTEM SIMULATOR--PSS(tm)E    FRI, JUN 13 2008  19:45
30     2010 LA BASE CASE:  GTF=170, FP=62, GTF-3RVRS 230, NOGTF-OV
31     CTBWIND=100, VALWIND=104, HIGHWD=268, MCDC=150EW, CRO=77NS
32
33     BUSES WITH VOLTAGE GREATER THAN 1.0500:
34
35       BUS# X-- NAME --X BASKV AREA  V(PU)  V(KV)      BUS# X-- NAME --X BASKV AREA  V(PU)  V(KV)
36       1053 DELL-R      161.00   62 1.0717 172.54      1064 SHERIDAN    50.000   62 1.0714 53.569
37       2031 FAIRFILD    69.000   62 1.0578 72.988      3170 EXXONAUX    12.500   62 1.0516 13.145
38       3189 IVANHOE     2.4000   62 1.0685  2.565      3591 CL1&STR7    7.2000   62 1.0576  7.615
39       3977 CHROME*1    13.800   62 1.0540 14.545      3978 CHROMET1    13.800   62 1.0540 14.545
40       5007 SALMONID    69.000   62 1.0781 74.392      5027 TENDOY      69.000   62 1.0774 74.339
41       5028 LEMHI       69.000   62 1.0778 74.368      5059 DIVIDE-R    69.000   62 1.0501 72.454
42       5061 MELROSE     69.000   62 1.0508 72.508      5069 DVDE-R T    69.000   62 1.0505 72.485
43       5079 JONES-R     69.000   62 1.0507 72.500      5125 SLVR BOW    69.000   62 1.0511 72.523
44       5154 PTRSNFLT    69.000   62 1.0695 73.795      6018 MANHATNT    50.000   62 1.0596 52.979
45       6019 MANHATPM    50.000   62 1.0584 52.918      6022 BELGRADE    50.000   62 1.0611 53.055
46       6025 BOZMN SS    50.000   62 1.0709 53.544      6026 BOZMN NS    50.000   62 1.0698 53.491
47       6027 EGALNS T    50.000   62 1.0698 53.492      6029 JACKRABT    69.000   62 1.0692 73.775
48       6030 LIVIN WS    50.000   62 1.0506 52.531      6032 SOURDOUG    50.000   62 1.0697 53.484
49       6033 MTELLS-R    50.000   62 1.0695 53.474      6034 MUIR        50.000   62 1.0690 53.450
50       6035 CLYDPARK    50.000   62 1.0596 52.978      6036 LIVNGSTN    50.000   62 1.0508 52.538
51       6037 CLYDPK-R    50.000   62 1.0570 52.850      6038 LIVIN NS    50.000   62 1.0519 52.596
52       6039 LIVING-R    50.000   62 1.0508 52.538      6040 LIVNGSTN    69.000   62 1.0760 74.245
53       6043 BRAND S     69.000   62 1.0754 74.200      6048 BGTIMB-R    50.000   62 1.0549 52.744
54       6049 PINECR-R    69.000   62 1.0727 74.019      6057 SPRNGL T    50.000   62 1.0516 52.580
55       6060 SWINGLEY    50.000   62 1.0507 52.537      6061 E & W       50.000   62 1.0508 52.540
56       6062 HUNTER      50.000   62 1.0509 52.547      6063 SPRGDALE    50.000   62 1.0507 52.536
57       6065 BGTIMBER    50.000   62 1.0534 52.672      6066 MELVILLE    50.000   62 1.0549 52.744
58       6070 BGTMBERA    50.000   62 1.0570 52.852      6071 MEADWVIL    69.000   62 1.0653 73.503
```

```
59       6073 HOL PUMP    50.000   62 1.0508 52.538      6074 HAYHOOK     50.000   62 1.0574 52.872
60       6078 BZRIVERS    50.000   62 1.0648 53.239      6082 PATERSNT    50.000   62 1.0692 53.458
61       6084 PATERSON    50.000   62 1.0666 53.331      6089 WILSAL-R    50.000   62 1.0559 52.797
62       6090 DOWNER      50.000   62 1.0506 52.529      6093 HOLPUM T    50.000   62 1.0508 52.538
63       6119 AMSTER T    50.000   62 1.0633 53.165      6120 AMSTRDAM    50.000   62 1.0603 53.013
64       6125 BOZ SS 1    50.000   62 1.0709 53.544      6126 BOZ NS 1    50.000   62 1.0699 53.493
65       6132 W SOURDH    50.000   62 1.0701 53.504      6931 EMIGRT*1    13.800   62 1.0514 14.510
66       6932 EMIGRTT1    13.800   62 1.0514 14.510      9052 THFALLPM    50.000   62 1.0572 52.860
67       9057 LOLO        69.000   62 1.0561 72.868      9060 MACLAY      69.000   62 1.0566 72.908
68       9069 LOLO-R      69.000   62 1.0561 72.868      9070 FLODINLM    50.000   62 1.0561 52.805
69       9913 THFAPT*1    2.4000   62 1.0624  2.550      9914 THFAPTT1    2.4000   62 1.0598  2.543
70      62012 TOWN2       500.00   62 1.1176 558.78     62013 TOWN1       500.00   62 1.1176 558.78
71      62025 CANYON      7.0000   62 1.1362  7.953     62030 PTRSNFLT    230.00   62 1.0790 248.18
72      62033 ANA BPA     115.00   62 1.0511 120.87     62046 BROADVU     500.00   62 1.0855 542.76
73      62053 BROADV&2    500.00   62 1.0777 538.84     62054 BROADV&1    500.00   62 1.0783 539.13
74      62057 COLSTRP     500.00   62 1.0800 540.00     62075 MILLERCK    69.000   62 1.0616 73.253
75      62084 DILLON S    161.00   62 1.0515 169.29     62154 RHONPOUL    100.00   62 1.0509 105.09
76      62348 EGALLTIN    50.000   62 1.0698 53.489     62349 JACKRABT    50.000   62 1.0675 53.376
77      62821 LIGNITE     230.00   62 1.0767 247.65     90106 JG_CLR      0.5750   62 1.0562  0.607
78
79
80     BUSES WITH VOLTAGE LESS THAN 0.9500:
81
82       BUS# X-- NAME --X BASKV AREA  V(PU)  V(KV)      BUS# X-- NAME --X BASKV AREA  V(PU)  V(KV)
83    62180 DUTTON      115.00   62 0.9382 107.90
```

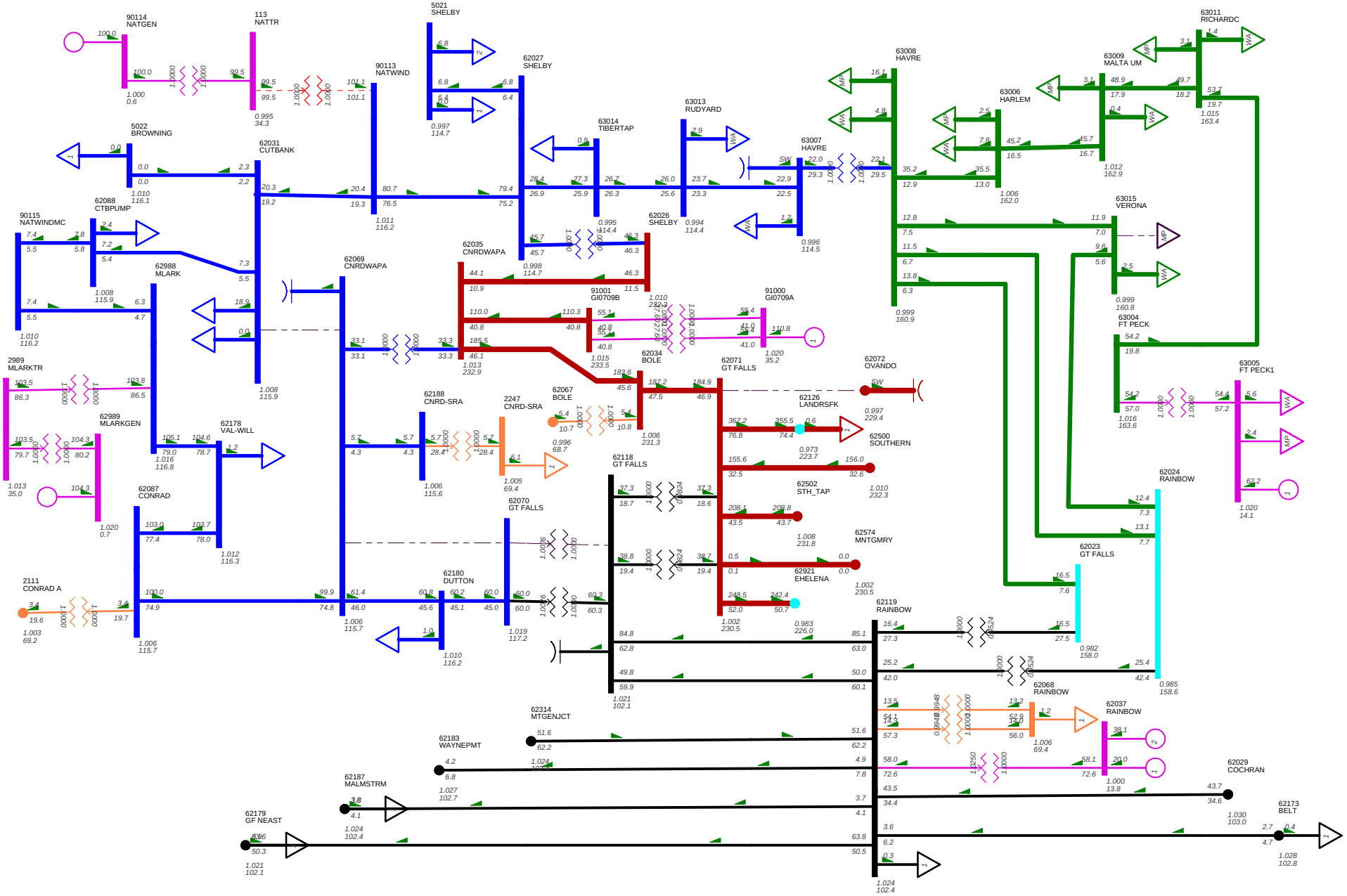

2010 LA BASE CASE: GTF=170, FP=62, GTF-3RVRS 230, NOGTF-OV
CTBWIND=100, VALWIND=104, HIGHWD=268, MCDC=150EW, CRO=77NS
SAT, JUN 14 2008 8:19
CONWIND=110 MW w/o NWE 115 (N-1: BV-JG 230kV)

Bus - VOLTAGE (kV/PU)
Branch - MVA/% OF RATE A
Equipment - MVA

100.0%RATEA
0.990UV
1.040OV

kV: <=50.000 <=69.000 <=100.000 <=115.000
<=161.000 <=230.000 <=500.000 >500.000

PTI INTERACTIVE POWER SYSTEM SIMULATOR--PSS(tm)E SAT, JUN 14 2008 8:15
2010 LA BASE CASE: GTF=170, FP=62, GTF-3RVRS 230, NOGTF-OV
CTBWIND=100, VALWIND=104, HIGHWD=268, MCDC=150EW, CRO=77NS
OUTPUT FOR AREA 62 [MONTANA]
BRANCH LOADINGS ABOVE 95.0 % OF RATING (MVA FOR TRANSFORMERS, CURRENT FOR NON-TRANSFORMER BRANCHES):

X--------- FROM BUS ----------X				X---------- TO BUS ----------X						RATING SET A		RATING SET B		RATING SET C	
BUS#	X-- NAME --X	BASKV	AREA	BUS#	X-- NAME --X	BASKV	AREA	CKT	LOADING	RATING	PERCENT	RATING	PERCENT	RATING	PERCENT
107	KENFIELD	34.500*	62	90107	KFIELDGEN	0.5750	62	1	21.8	22.8	95.8	--	--	--	--
113	NATTR	34.500	62	90113	NATWIND	115.00*	62	1	101.1	100.0	101.1	--	--	--	--
3095	SUMATRA	69.000*	62	62584	SUMATRA	34.500	62	1	45.1	46.7	96.6	--	--	--	--
62011	HOLTER	6.6000*	62	62120	HOLTER	100.00	62	1	50.4	48.0	105.1	--	--	--	--
62025	CANYON	7.0000*	62	62122	CANYON F	100.00	62	1	59.2	62.0	95.5	--	--	--	--
62027	SHELBY	115.00	62	90113	NATWIND	115.00*	62	1	79.9	105.6	75.7	--	--	80.0	99.9
62034	BOLE	230.00	62	62035	CNRDWAPA	230.00*	62	1	183.2	402.4	45.5	--	--	100.0	183.2
62034	BOLE	230.00*	62	62071	GT FALLS	230.00	62	1	186.2	394.4	47.2	--	--	100.0	186.2
62036	JUDITHGP	230.00	62	62104	JUDITHGP	100.00*	62	1	100.8	100.0	100.8	--	--	--	--
62042	BILGEN I	13.800*	62	62101	BILINGSX	50.000	62	1	65.2	60.0	108.7	--	--	--	--
62043	MONTANA1	13.800	62	62059	MONTANA1	115.00*	62	1	40.2	40.0	100.6	--	--	--	--
62089	BROADVU	100.00	62	62106	HARLOWTN	100.00*	62	1	72.7	62.3	116.7	--	--	--	--
62104	JUDITHGP	100.00*	62	62233	JUDITGPT	100.00	62	1	84.2	62.4	134.9	--	--	--	--
62106	HARLOWTN	100.00*	62	62192	PANTROBE	100.00	62	1	70.1	62.0	113.1	--	--	--	--
62106	HARLOWTN	100.00	62	62227	TWO DOT	100.00*	62	1	58.5	57.2	102.2	--	--	--	--
62106	HARLOWTN	100.00	62	62233	JUDITGPT	100.00*	62	1	83.0	62.0	133.9	--	--	--	--

---

PTI INTERACTIVE POWER SYSTEM SIMULATOR--PSS(tm)E SAT, JUN 14 2008 8:15
2010 LA BASE CASE: GTF=170, FP=62, GTF-3RVRS 230, NOGTF-OV
CTBWIND=100, VALWIND=104, HIGHWD=268, MCDC=150EW, CRO=77NS

BUSES WITH VOLTAGE GREATER THAN 1.0500:

BUS#	X-- NAME --X	BASKV	AREA	V(PU)	V(KV)	BUS#	X-- NAME --X	BASKV	AREA	V(PU)	V(KV)
1053	DELL-R	161.00	62	1.0593	170.54	1064	SHERIDAN	50.000	62	1.0540	52.699
2031	FAIRFILD	69.000	62	1.0688	73.747	3170	EXXONAUX	12.500	62	1.0516	13.144
3189	IVANHOE	2.4000	62	1.0622	2.549	3591	CL1&STR7	7.2000	62	1.0583	7.620
3977	CHROME*1	13.800	62	1.0524	14.523	3978	CHROMET1	13.800	62	1.0524	14.523
4905	GLNGRY*1	13.800	62	1.0790	14.891	4906	GLNGRYT1	13.800	62	1.0790	14.891
5007	SALMONID	69.000	62	1.0674	73.650	5027	TENDOY	69.000	62	1.0666	73.598
5028	LEMHI	69.000	62	1.0671	73.627	5154	PTRSNFLT	69.000	62	1.0588	73.060
6025	BOZMN SS	50.000	62	1.0528	52.642	6026	BOZMN NS	50.000	62	1.0519	52.594
6027	EGALNS T	50.000	62	1.0519	52.595	6029	JACKRABT	69.000	62	1.0512	72.531
6032	SOURDOUG	50.000	62	1.0517	52.583	6033	MTELLS-R	50.000	62	1.0515	52.573
6034	MUIR	50.000	62	1.0510	52.548	6040	LIVNGSTN	69.000	62	1.0622	73.294
6043	BRAND S	69.000	62	1.0616	73.249	6049	PINECR-R	69.000	62	1.0589	73.065
6082	PATERSNT	50.000	62	1.0512	52.558	6125	BOZ SS 1	50.000	62	1.0528	52.642
6126	BOZ NS 1	50.000	62	1.0519	52.596	6132	W SOURDH	50.000	62	1.0521	52.603
9052	THFALLPM	50.000	62	1.0561	52.806	9070	FLODINLM	50.000	62	1.0550	52.751
9913	THFAPT*1	2.4000	62	1.0613	2.547	9914	THFAPTT1	2.4000	62	1.0587	2.541
62012	TOWN2	500.00	62	1.1133	556.63	62013	TOWN1	500.00	62	1.1133	556.63
62025	CANYON	7.0000	62	1.1105	7.774	62030	PTRSNFLT	230.00	62	1.0686	245.78

```
     62046 BROADVU     500.00   62 1.0838 541.88     62053 BROADV&2    500.00   62 1.0750 537.51
     62054 BROADV&1    500.00   62 1.0756 537.78     62057 COLSTRP     500.00   62 1.0800 540.00
     62348 EGALLTIN    50.000   62 1.0518 52.592     62821 LIGNITE     230.00   62 1.0775 247.83
     90106 JG_CLR      0.5750   62 1.0509  0.604
```

```
    BUSES WITH VOLTAGE LESS THAN 0.9500:

      BUS# X-- NAME --X BASKV AREA  V(PU)  V(KV)      BUS# X-- NAME --X BASKV AREA  V(PU)  V(KV)
      1102 ASIMI 2     13.800   62 0.9407 12.982      3085 RNDUPPMT    50.000   62 0.9495 47.476
      3090 GAGE        50.000   62 0.9439 47.193      3091 MUSLSHLL    50.000   62 0.9359 46.793
      3092 MTSTMINE    50.000   62 0.9324 46.622      3093 MELSTONE    50.000   62 0.9291 46.456
      3185 RONDUPPM    50.000   62 0.9484 47.419      3192 MTNSTATP    50.000   62 0.9326 46.628
      3286 ROUNDUP     69.000   62 0.9431 65.071      5094 MCCONE-R    50.000   62 0.9266 46.329
      5412 GRASRANG    50.000   62 0.9250 46.248      5413 WNTT JCT    50.000   62 0.9395 46.974
      5414 WINETT-R    50.000   62 0.9284 46.419      5415 RONDUP-R    50.000   62 0.9496 47.478
      5417 MCCONE T    50.000   62 0.9285 46.423      5418 BOXLDR-R    50.000   62 0.9266 46.329
    62192 PANTROBE    100.00   62 0.9489 94.886
```