Draft Report

System Impact Study - Projects # GI-0616 & GI-0707A
367 MW of Wind Generation in Logan County, ND

GI-0616: 81 MW Wind Farm
GI-0707A: 286 MW Wind Farm

January 28, 2009

Prepared for:
Western Area Power Administration

Prepared by:
ABB Inc.

940 Main Campus Drive, Suite 300
Raleigh, NC 27606

12 Cornell Road
Latham, NY 12110

ESC Report No. 2008-11751-013-1.R02

Authors:
S. Liu
S. Pillutla

Executive Summary

Western Area Power Administration (WAPA) commissioned ABB Inc., to perform a system impact study for the interconnection of Projects GI-0616 (81 MW) and GI-0707A (286 MW), two proposed wind farm projects in Logan County, ND. The projects are queued in the WAPA/BEPC/HCPD Integrated System (IS) generation interconnection queue. Both projects have requested an in-service date of July 2010.

This system impact study evaluated the collective impact of the proposed wind farm projects on transmission system performance and comprised steady-state, constrained interface, stability, and short-circuit analysis.

The scope of the system impact study is limited to identifying and resolving possible criteria violations that may limit the ability of the generators to interconnect. In accordance with WAPA system impact study practices, an interconnection request is required to mitigate stability impacts, short-circuit impacts and injection related steady-state impacts (local area thermal and voltage impacts under system intact and contingency conditions). Any results related to the delivery of power from these projects are for informational purposes only.

This is an out-of-queue study. Analyses were performed using models set up to simulate anticipated system conditions in the year 2011. Several prior-queued projects that are likely to be in service in this time frame were included in the study models based on discussions with the study ad hoc group. Among these projects is a proposed 300 MW wind farm on the Leland Olds-Groton 345 kV line (Project GI-0619) whose queue position is in between the proposed GI-0616 and GI-0707A wind farms. This wind farm was included as a prior-queued project in the initial analyses, but subsequently excluded. Addition of the GI-0619 wind farm will require further studies. The results summarized below are without the GI-0619 wind farm.

<u>Steady-State Analysis</u>:
The interconnection of the proposed GI-0616 and GI-0707A wind farms impacted several transmission facilities and resulted in steady-state criteria violations based upon the modeled delivery of the generator's output to loads outside the North Dakota

boundaries. A separate Delivery Study will be performed to identify delivery related impacts and associated system upgrades, if any.

Under system intact conditions, the incremental impact of the proposed GI-0616 & GI-0707A projects on facility loadings is insignificant.

Under contingency conditions, several transmission facilities were significantly impacted. Particular attention was given to the following facilities that became newly overloaded following the addition of the proposed projects. These facilities are in the vicinity of the Leland Olds and Groton substations and are considered injection constraints:

- **Leland Olds 345/230 kV Transformer #1 (Rate A=250 MVA ; Rate C=312 MVA):** This transformer became overloaded above its normal 250 MVA rating both in the pre- and post-project cases following the loss of the parallel #2 transformer. Post-contingency loading is 309 MVA (post-project case) or 99% based on the emergency rating of 312 MVA. The proposed wind farms could be run back if it is desired to further reduce the post-contingency loading on this transformer.

- **Groton-Bristol 115 kV line (Rate A=120 MVA ; Rate C=122 MVA):** This facility became newly overloaded following the loss of the Groton-Watertown 345 kV line. Post-contingency loadings are 102 MVA (pre-project) and 132 MVA (post-project). The overloads on this line may be addressed by upgrading or reconductoring the transmission line.

- **Groton-Redfield 115 kV line (Rate A=80 MVA ; Rate C=88 MVA):** This facility became newly overloaded following the loss of the Groton-Watertown 345 kV line. Post-contingency loadings are 60 MVA (pre-project) and 89 MVA (post-project). Terminal equipment replacement/adjustments would be required to allow this line to be increased to its conductor loading limit of 128 MVA.

- **Groton-Aberdeen 115 kV line (Rate A=120 MVA; Rate C=132 MVA) :** This facility became newly overloaded following the loss of the Groton-Watertown 345 kV line. Post-contingency loadings are 110 MVA (pre-project) and 143 MVA (post-project). Terminal equipment replacement/adjustments would be required to allow this line to be increased to its conductor loading limit of 178 MVA.

<u>Constrained Interface Analysis</u>:

The study also evaluated the impact of the proposed projects on constrained interfaces in the MAPP system. These results are for informational purposes only to identify potential third party flowgate issues for the requested delivery component of the transmission. Results indicate that the proposed projects adversely impact the NDEX interface with PTDF = 82.5%. This is a consequence of dispatching the proposed wind farms to loads outside the North Dakota boundaries.

Stability Analysis:
The impact of the proposed wind farms on local area and regional stability performance was evaluated. For the purposes of this analysis, the proposed wind farms are dispatched against loads within the NDEX boundaries and NDEX is assumed to be 2080 MW.

Results indicate that the proposed wind farms would adversely impact local area and regional stability performance. Results are summarized below:

In the pre-project case, transient voltage violations (0.67 pu) were observed at Jamestown 345 kV bus following fault ef3 (5 cycle 3-phase fault at Stanton 230 on the Coal Creek-McHenry line). One possible solution that has been studied by area transmission owners is to reduce the ef3 fault clearing time from 5 cycles to 4 cycles by replacing the existing breakers at Stanton 230 on the Coal Creek line with faster two-cycle breakers. Fault ef9 was tested with the 4 cycle fault clearing time and no criteria violations were found.

In the post-project case, fault ef3 rendered the system unstable. Fault ef9 resulted in transient voltage violations (0.68 pu) at Jamestown 345 kV. Faults ac3 (4 cycle 3-phase fault on Antelope valley – Broadland 345 kV line) and ag1 (4 cycle single-line-to-ground fault on Leland Olds – Ft. Thompson 345 kV line with breaker failure) resulted in transient voltage violations (0.68 pu) at GI-0616 and GI-0707A 345 kV POI.

In order to mitigate the above criteria violations, the following reinforcements were tested:

- To support base case voltages and mitigate transient voltages at proposed Wind Farms 345 kV POI: Add 2*60 MVAr switched capacitor at the GI-0616 and GI-0707A 345 kV POI

- To reduce the loop flows on the Center – Jamestown 345 kV line to such an extent that the transient voltage violations at Jamestown 345 kV are mitigated: Add 15% Series Compensation on the Leland Olds – Ft. Thompson 345 kV line

No criteria violations were observed with the above system reinforcements (and 4 cycle clearing at Stanton 230 for ef9).

In lieu of series compensation on the Leland Olds-Ft. Thompson 345 kV line and breaker replacements at Stanton 230 kV, the following reinforcements were tested to mitigate the pre- and post-project ef3 violations in Jamestown area:

- Add a 345/230 transformer (250 MVA) to connect the Jamestown 345 kV and 230 kV buses

With the above system reinforcements, no transient voltage violations were observed both in the pre- and post-project cases.

In lieu of series compensation on the Leland Olds-Ft. Thompson 345 kV line, breaker replacements at Stanton 230 kV, and a 345/230 kV transformer at Jamestown, the following third-party reinforcement may be considered to mitigate the pre- and post-project criteria ef3 violations in the Jamestown area:

- Pre-project Case
  2*60 MVAr switched capacitor at Jamestown 345 kV

- Post-project Case
  2*60 MVAr switched capacitor at Jamestown 345 kV
  120 MVAr SVC at Jamestown 345 kV

With the above system reinforcements, no criteria violations were observed both in the pre- and post-project cases.

The above results showed fault ef3 to be the most limiting fault from a stability perspective. The ef3 violations are attributable to prior-queued projects G531 (68 MW coal unit at Stanton 230) and G607 (25 MW uprate of the existing Coyote unit). A sensitivity analysis was performed to check the impact of the proposed wind farms on stability performance following fault ef3 under the assumption that projects G531 and G607 do not proceed with their interconnection requests or that the facility reinforcements are not available due to the associated projects not being in service prior to project GI-0616/0707A. For the purposes of this analysis, the switched capacitors at the GI-0616 and GI-0707A 345 kV POI are assumed to be the same as before (2*60 MVAr). The following observations are made:

1. Adding the proposed projects resulted in transient voltage violations at Jamestown 345 kV bus (0.67 pu) following fault ef3.

2. Series compensating the Leland Olds-Ft. Thompson 345 kV line by 20% mitigates the post-project ef3 violations.

3. The addition of a 345/230 kV transformer at Jamestown is an alternative to series compensating the Leland Olds-Ft. Thompson 345 kV line to mitigate the ef3 violations.

The above results show that with the addition of system reinforcements, the criteria violations associated with the proposed GI-0616 and GI-0707A Wind Farms on system stability performance can be mitigated.

Although series compensation is effective from a stability perspective, additional studies are needed to fully assess the impact of series compensation on transmission system performance. These studies should cover the impact of series compensation on transmission system fault current levels, potential for sub-synchronous resonance (SSR) and steady-state performance.

Also, additional analysis will be required if there is further interest in adding a 345/230 kV transformer at Jamestown.

Short-Circuit Analysis:
Short-circuit calculations were performed to determine the impact of the proposed project on fault current levels at nearby substations. Three-phase symmetrical fault current levels were calculated at local area buses, both without and with the proposed projects. A comparison of the fault currents to the capability of breakers at the local substations indicates that there is adequate interrupting capability following the addition of the new generation.

The results of this study are based on available data and assumptions made at the time of conducting this study. If any of the data and/or assumptions made in developing the study models change, the results provided in this report may not apply.

LEGAL NOTICE

This document, prepared by ABB Inc., is an account of work sponsored by Western Area Power Administration (WAPA). Neither ABB Inc., nor any person or persons acting on behalf of either party: (i) makes any warranty or representation, expressed or implied, with respect to the use of any information contained in this report, or that the use of any information, apparatus, method, or process disclosed in this report may not infringe privately owned rights, or (ii) assumes any liabilities with respect to the use of or for damages resulting from the use of any information, apparatus, method, or process disclosed in this document.

Table of Contents

1. INTRODUCTION 1
2. DESCRIPTION OF PROPOSED PROJECTS 3
3. STUDY METHODOLOGY AND ASSUMPTIONS 4
   3.1 Steady-State Analysis 4
   3.2 Constrained Interface Analysis 5
   3.3 Stability Analysis 6
   3.4 Short-Circuit Analysis 6
4. STEADY-STATE ANALYSIS 7
   4.1 Model Development 7
   4.2 Modeling of Proposed Wind Farms 8
   4.3 System Intact Analysis 10
   4.4 Contingency Analysis 11
   4.5 Sensitivity Analysis without GI-0619 14
   4.6 Summary 16
5. CONSTRAINED INTERFACE ANALYSIS 36
6. STABILITY ANALYSIS 40
   6.1 Model Development 40
   6.2 Baseline Performance (i.e., Without the GI-0616 and GI-0707A Wind Farm) . 41
   6.3 Performance with GI-0616 and GI-0707A Wind Farms 42
   6.4 Sensitivity Analysis Without GI-0619 (300 MW) 43
   6.5 Sensitivity Analysis Without Prior-Queued Projects G531 and G607 44
   6.6 Sensitivity Analysis to Determine Third-party Mitigation in lieu of Series Compensation to Address the Transient Voltage Violations at Jamestown 45
   6.7 Sensitivity Analysis with NDEX=2447 MW 46
   6.8 Sensitivity Analysis with 345/230 kV Jamestown Transformer 47
7. SHORT-CIRCUIT ANALYSIS 61
   7.1 Base Case Development 61
   7.2 Short-Circuit Calculations 61
8. CONCLUSIONS 63
9. REFERENCES 67

APPENDIX A – STEADY-STATE MODEL OF PROPOSED WIND FARMS

APPENDIX B – STEADY-STATE ANALYSIS – CASE SUMMARIES

APPENDIX C – DATA FILES FOR STEADY-STATE ANALYSIS

APPENDIX D – STABILITY ANALYSIS – CASE SUMMARIES

APPENDIX E – STABILITY ANALYSIS – RESULTS

APPENDIX F – CONSTRAINED INTERFACE ANALYSIS RESULTS

1. INTRODUCTION

Western Area Power Administration (WAPA) commissioned ABB Inc., to perform an out-of-queue order system impact study for the interconnection of two wind farm projects in Logan County, ND. The proposed projects are queued in the WAPA/BEPC/HCPD Integrated System (IS) generation interconnection queue. The projects are:

- GI-0616: 81 MW Wind Farm. Queue date: October 23, 2006.
- GI-0707A: 286 MW Wind Farm. Queue date: April 13, 2007.

The point of interconnection for both wind farms is approximately 100 miles from Leland Olds on the Leland Olds-Groton 345 kV line. Figure 1.1 below shows the approximate location of the proposed wind farms with respect to the bulk transmission facilities in the area. Both projects have requested an in-service date of July 2010.

Figure 1.1: Approximate Location of Proposed Wind Farms

This study evaluated the collective impact of both wind projects on transmission system performance and comprises steady-state, constrained interface, stability, and short-circuit analyses.

Section 2 provides a brief description of the proposed projects. Section 3 describes the study methodology and criteria used for the analyses. Results of the steady-state analysis are presented in Section 4. Constrained interface, stability and short-circuit analysis results are presented in Sections 5, 6 and 7 respectively.

2. DESCRIPTION OF PROPOSED PROJECTS

The point of interconnection of the proposed wind farms is approximately 100 miles from Leland Olds on the Leland Olds-Groton 345 kV line.

Each wind farm will comprise Siemens SWT-2.3-93 variable-speed wind turbine-generators. Each wind turbine-generator unit has a rated power output of 2.3 MW. The electrical drive train of consists of an induction generator that is coupled to the grid via a back-to-back power converter. See Figure 2.1.

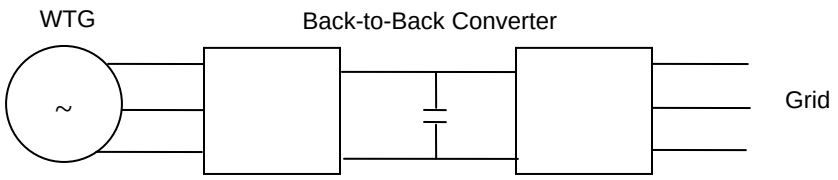

Figure 2.1: Basic One-line Diagram of Siemens SWT2.3-93

The converter allows generator operation at variable speed, frequency and voltage while supplying power at constant frequency and voltage to the grid. The converter is capable of delivering MW as well as delivering or absorbing MVAr to/from the grid.

The voltage at the wind turbine-generator terminals is 690V and is stepped up to a collector system voltage of 34.5 kV through a generator step-up transformer. Each GSU is rated 690V/34.5 kV with a power rating of 2.6 MVA.

Each wind farm will have its own 34.5 kV collector system network to collect the power output from the individual wind turbine generators. Two new substations will interface the 34.5 kV collector system with the 345 kV point of interconnection i.e., one 34.5/345 kV substation for each wind farm.

3. STUDY METHODOLOGY AND ASSUMPTIONS

3.1 Steady-State Analysis

The purpose of steady-state analysis is to analyze the impact of the proposed projects on transmission system facilities under steady-state conditions. It involves two distinct analyses: thermal analysis and voltage analysis. Steady-state performance was examined both under system intact and N-1 contingency conditions. Full ac power flow solutions were used. The PSS/E program was used in these analyses.

3.1.1 System Intact Analysis

The incremental impact of the proposed wind farms on thermal loading of transmission facilities under system intact conditions was evaluated by comparing transmission system power flows with and without the proposed projects. For this purpose, full ac power flow solutions were used.

All transmission facilities rated 110 kV and above were monitored in the WAPA, BEPC, OTP, GRE, MP, XEL and MH control areas. The criterion used to flag thermal overloads is 100% of continuous facility rating (Rate A in PSS/E).

Significantly Affected Facilities (SAF) were identified based on MAPP Screening Guidelines (see reference [2]). According to these guidelines, all overloaded facilities that have a TDF (Transfer Distribution Factor) greater than 5% of the generation addition and an increase in flow greater than 1 MW (without Wind Farms vs. with Wind Farms) are flagged as significantly affected facilities.

In order to compute the % TDF on a given transmission facility, the following formula was used. The pre- and post-project MVA flows were obtained directly from PSS/E.

$$\text{TDF}(\%) = 100 \times \frac{\text{MVA Flow (with proposed project) - MVA Flow (without proposed project)}}{\text{MW injection of proposed project}}$$

Northern MAPP buses rated 110 kV and above were monitored for possible voltage violations. Voltages that were outside the values shown in Table 2.1 were flagged as violations. Those buses that have a voltage change of more than 0.01 p.u. (without Wind Farms vs. with Wind Farms) are included in the SAF list.

3.1.2 Contingency Analysis

Contingency analyses include single branch and selected multi-element contingencies on facilities rated 110 kV and above. Single branch as well as multi-terminal outages in North and South Dakota and single branch contingencies in WAPA, BEPC, GRE, MH, MP, OTP, and XEL were considered. Multi-terminal outages were also considered in Northern MN. All facilities rated 110 kV and above were monitored in the WAPA, BEPC, OTP, GRE, MP, XEL and MH control areas.

Contingencies were solved using activity ACCC of PSS/E. Phase shifters and transformer taps were enabled. Non-convergent contingencies from these analyses (primarily due to switching back and forth of transformer taps and switched shunts) were solved manually and their violations were appended to the ACCC results.

Thermal violations were flagged based on continuous facility rating (Rate A in PSS/E). Post-contingency power flows in excess of 90% of Rate A were recorded. Facility loadings with and without the proposed Wind Farms were tabulated and compared. The criteria used to flag thermal overloads is 100% of Rate A. Significantly Affected Facilities (SAF) were identified based on the MAPP Screening Guidelines [2]. According to these guidelines, all overloaded facilities that have a TDF (Transfer Distribution Factor) greater than 3% of the generation addition and an increase in flow greater than 1 MW (without Wind Farms vs. with Wind Farms) are flagged as significantly affected facilities.

If several contingencies overload a given transmission facility, only the worst fifteen contingencies are reported. Overloads on generator step up transformers are not reported.

As in the system intact analysis, Northern MAPP buses rated 110 kV and above were monitored for possible post-contingency voltage violations. Voltages that were outside the values shown in Table 2.1 were flagged as violations. Those buses that have a voltage change of more than 0.01 p.u. (without Wind Farm vs. with Wind Farm) are included in the SAF list.

Table 2.1: Voltage Criteria for Steady-State Analysis

System	Base kV	System Intact Conditions		N-1 Contingency Conditions	
		Max (pu)	Min (pu)	Max (pu)	Min (pu)
Northern MAPP	110-500 kV	1.05	0.95	1.10	0.90
MP (Area 608)	110-500 kV	1.05	1.00	1.05	0.95
MP Western Division (Area 610)	115-230 kV	1.05	0.96	1.05	0.92
OTP (Area 626)	230-345 kV	1.05	0.97	1.10	0.92
	110-115 kV	1.07	0.97	1.10	0.92

The corresponding .sub, .mon, and .con files utilized in these analyses are attached in Appendix C.

3.2 Constrained Interface Analysis

The purpose of the constrained interface analysis is to calculate the impact of the proposed project on specified interfaces in the MAPP transmission system. The MAPP DFCALC constrained interface analysis program was used for this purpose.

3.3 Stability Analysis

The purpose of the stability analysis is to determine whether the MAPP transmission system would meet stability criteria following commissioning of the proposed wind farms. To that end, disturbances were simulated in Northern MAPP to assess the impact of the proposed projects on transmission system stability performance. The analysis was performed based on the 2008 NMORWG Study Package.

3.4 Short-Circuit Analysis

The purpose of the short-circuit analysis is to identify breakers in the transmission system that will not be able to handle the increased fault current due to the addition of the proposed wind farms. Three-phase and single-line-to-ground faults were simulated and the impact of the proposed projects on fault currents was determined.

4. STEADY-STATE ANALYSIS

4.1 Model Development

Analyses were performed using models set up to simulate year 2011 conditions. The starting point for the development of the pre-project model (i.e., without the proposed GI-0616 and GI-0707A projects) was case *f11supk-final-06series.sav* included in the NMORWG 2008 Study package. This is a MAPP 2006 Series 2011 Summer Peak base case. In order to develop the pre-project case, several changes were made to this case with input from the study ad hoc group. Some of the more significant changes included the following:

- B10T is modeled at 165 MW South
- Ft Peck at max - 66410 @ 42 MW, 66414 @ 48 MW & 66415 @ 49 MW
- Oahe #7 at max - 66558 @ 97 MW
- Increased load at Baker 115 to 43.6 MW (67305)
- Series compensation modeled on the LGS-Wilmarth 345 kV line

Also, the following planned facilities were included in the model. These facilities are not in service at the time of performing the study.

- <u>Western North Dakota Projects</u>:
  - Williston-Watford City-Charlie Creek 230 kV line
  - Belfield-Rhame 230 kV line
  - Williston-Tioga 230 kV line

- <u>2080 Improvements</u>:
  - 60 MVAr capacitor addition at Groton 115
  - 75 MVAr capacitor addition at Watertown 230

- <u>NWPS Mitchell Area Improvements</u>
  - Letcher-Mitchell 115 kV line
  - Utica-Menno Jct. 115 kV line

- Keystone Loads and Improvements

- SW MN Wind is modeled at 1200 MW

Also, several prior-queued generation projects were added based on input from WAPA. See Table 4.1. These projects fall into three categories:

- Projects that are already in service (shown in green)
- Projects that have already been studied with an in-service date of 2011 or before (shown in white) with the exception of GI-0619 which was included due to the POI being on the same 345 kV line.

- Projects under study at the time of starting this analysis and likely to be in service by 2011 (shown in yellow)

Table 4.1 shows a 300 MW wind farm on the Leland Olds-Groton 345 kV line – Project GI-0619. This wind farm is queued between the proposed GI-0616 and GI-0707A wind farms and has requested an in-service date of October 2010. This wind farm was included as a prior-queued project in the study models. A sensitivity analysis was performed later with this wind farm excluded.

In addition to the projects shown in Table 4.1, an attempt was made to add several other prior-queued generating projects to the model. These included projects with in-service dates beyond 2011 (e.g., G392 – Big Stone 2) and projects that are understood to be not presently under study at the time this study began (GI-512, G248, G359, G622, G624, G690 and G713). See Table 4.2. Adding these projects resulted in excessively high loadings and low voltages in the North Dakota transmission system (this is a consequence of adding over 900 MW of generation in North Dakota with no associated transmission reinforcements). The base cases were deemed unusable and the Table 4.2 projects were subsequently removed from the model. The resulting pre-project summer peak model is named *a02-sp11aa.sav* (Case *a02*). The North Dakota load is at 111% of the 2011 peak load level of 3360 MW.

The post-project case was developed from Case *a02* by modeling and dispatching the proposed GI-0616 and GI-0707A projects. Modeling details are presented in Section 4.2. Both projects were dispatched to MAIN load. The post-project summer peak case is named *a04-sp11aa.sav.* Detailed case summaries are given in Appendix B. Corresponding one-line diagrams without and with the proposed wind farms are given in Figures 4.3 and 4.4 respectively.

The impact of the proposed wind farms was studied both under system intact and N-1 contingency conditions. Full ac power flow solutions were used. Results are described in Section 4.3 and 4.4.

4.2 Modeling of Proposed Wind Farms

4.2.1 Wind Turbine Generator Model

As noted in Section 2, the proposed wind turbine-generators have a back-to-back converter between the stator and the grid. The reactive capability of the wind turbine generator depends both on the ac terminal voltage and the active power capability of the dc link coupling the machine side converter and grid side converter, i.e. the dc voltage and the dc current. Therefore the reactive power capability curves of the proposed units are different to those of synchronous generators, and the Qmax and Qmin cannot be assumed constant. In order to model the reactive power limitations, it is important to understand that the dc link in the proposed wind turbine generator is basically a voltage source converter

with a reactive current limiter. In other words, the reactive power output of the generator is reduced when the converter MVA rating or current rating is violated. The reactive power capability of the wind turbine generator can be approximated by modeling the current limitation in the power flow model.

For power flow study purposes, the wind turbine-generator unit is modeled as a conventional generator coupled to a Voltage Source Converter (VSC) based dc line. See Figure 4.1. The generator represents the induction generator and the VSC dc line represents the back-to-back converter with the current limitation. The current limit at rated MW can be obtained from the reactive capability curves given in reference [1]. It should be noted that Figure 4.1 represents the power flow model for a single wind turbine generator unit and does not include the generator step up transformer and collector system.

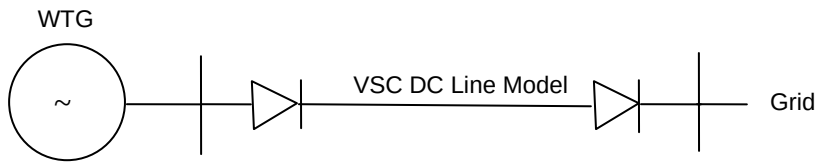

Figure 4.1: Representation of Siemens SWT2.3-93 WTG in Power Flow

4.2.2 Wind Farm Model

Figure 4.2 shows the power flow representation of the proposed wind farms. Each wind farm is modeled separately based on a lumped representation of individual wind turbine generator units. Project GI-0616 is modeled based on a lumped equivalent of 35 WTGs and Project GI-0707A is modeled based on a lumped equivalent of 125 WTGs.

The 345 kV point of interconnection for both wind farms is at bus 67616.

The 345/34.5 kV transformers between buses 67616 and 67627 represent the substation transformers for wind farm GI-0616. The transformer between buses 67627 and 90618 represents a lumped generator step-up transformer (34.5 kV/690 V). The dc line between buses 90618 and 90617 together with the generator at bus 90616 is a lumped representation of 35 wind turbine-generator units. A zero impedance line is modeled between buses 90616 and 90617. The rectifier end of the dc line is assumed to be in MW control and the inverter end is assumed to regulate the inverter ac voltage at bus 90618 to 1.0 pu.

A similar representation is used for wind farm GI-0707A comprising 125 WTGs.

Power flow data for both wind farms are given in Appendix A.

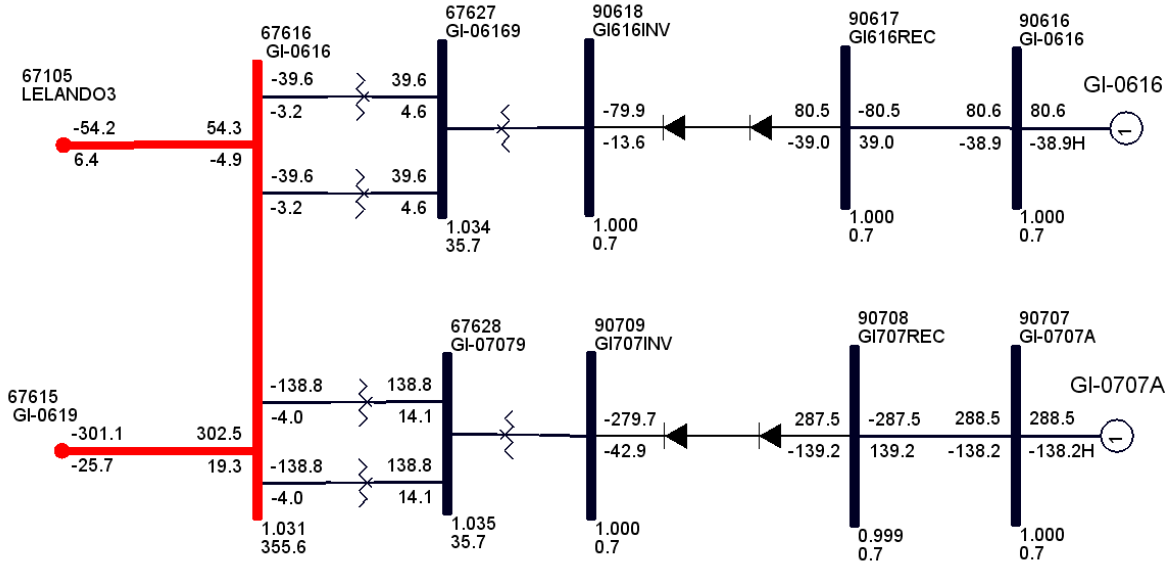

Figure 4.2: Representation of Proposed Wind Farms for Power Flow Analysis

4.3 System Intact Analysis

The incremental impact of the GI-0616 & GI-0707A Wind Farm on thermal loading of transmission facilities under system intact conditions was evaluated by comparing transmission system power flows with and without the GI-0616 & GI-0707A project.

All transmission facilities rated 110 kV and above were monitored in the WAPA, OTP, GRE, MP, XEL and MH control areas. The criterion used to flag thermal overloads is 100% of continuous facility rating (Rate A in PSS/E). All overloaded facilities that have a TDF (Transfer Distribution Factor) greater than 5% of the generation addition and an increase in flow greater than 1 MW (without wind farm vs. with wind farm) are flagged as significantly affected facilities (SAF).

Northern MAPP buses rated 110 kV and above were monitored for possible voltage violations. Voltages that were outside the values shown in Table 2.1 were flagged as violations. Those buses that have a voltage change of more than 0.01 p.u. (without Wind Farm vs. with Wind Farm) are included in the SAF list.

The incremental impact of the proposed GI-0616 & GI-0707A projects on facility loadings is insignificant.

Significantly affected bus voltages are presented in Table 4.3.

4.4 Contingency Analysis

Contingency analyses include single branch and selected multi-element contingencies on facilities rated 110 kV and above. Single branch as well as multi-terminal outages in WAPA, and single branch contingencies in GRE, MH, MP, OTP, and XEL were considered. Select multi-terminal outages were also considered in Northern MN. Contingencies involving dc runbacks were excluded. All facilities rated 110 kV and above were monitored in the WAPA, OTP, GRE, MP, XEL and MH control areas.

Contingencies were solved using activity ACCC of PSS/E. Phase shifters and transformer taps were enabled. Non-convergent contingencies from these analyses (primarily due to switching back and forth of transformer taps and switched shunts) were solved manually and their violations were appended to the ACCC results.

Thermal violations were flagged based on continuous facility rating (Rate A in PSS/E). Post-contingency power flows in excess of 90% of the Rate A were recorded. Facility loadings with and without the GI-0616 & GI-0707 Wind Farm were tabulated and compared. The criteria used to flag thermal overloads is 100% of Rate A. Significantly Affected Facilities (SAF) were identified based on the following criteria: All overloaded facilities that have a TDF (Transfer Distribution Factor) greater than 3% of the generation addition and an increase in flow greater than 1 MW (without Wind Farm vs. with Wind Farm) are flagged as significantly affected facilities.

If several contingencies overload a given transmission facility, only the worst fifteen contingencies are reported. Overloads on generator step up transformers are not reported.

As in the system intact analysis, Northern MAPP buses rated 110 kV and above were monitored for possible post-contingency voltage violations. Voltages that were outside the values shown in Table 2.1 were flagged as violations. Those buses that have a voltage change of more than 0.01 p.u. (without Wind Farm vs. with Wind Farm) are included in the SAF list.

The following contingencies failed to converge, both with and without the proposed wind farm. Since these contingencies are remote from the study area, no attempt was made to solve them.

- Loss of 115/41.6 kV Transformer at Jamestown Peaker Substation (OTP): There are two peaking units at this 41.6 kV substation (bus 63172). The total output is approx. 40 MW. Following the loss of the 115/41.6 kV transformer, the only available transmission outlet is the Jamestown-

Edgeley-Oakes 41.6 kV line connecting to the Oakes 41.6/230 kV substation. The 41.6 kV path is rated 24 MVA and is unable to support the full output of the peakers. Voltage collapse is a result of increased loadings on the 41.6 kV lines. This contingency may be resolved by tripping one or both peaking units.

- Loss of 115/92 kV Transformer at Bay Front (XEL): The Bay Front Generating Station is located in Northern MN (bus 60657). There are four units at this substation and the total output is 55 MW. The loss of the 115/92 kV transformer results in the loss of a strong transmission outlet at Bay Front. This contingency may be solved by tripping one or more units at Bay Front.

- Loss of Yankee – Brookings 115 kV Line or Brookings 115/345 kV transformer: Approximately 1200 MW of wind generation is located in Southwest Minnesota. Out of 1200 MW, approximately 300 MW flows west to the 345 kV system through Yankee – Brooking 115 kV line and Brookings 115/345 kV transformer. The loss of this path results loss of strong transmission outlet to the 345 kV system resulting in a voltage collapse condition.

Table 4.4 lists the significantly affected facility loadings for contingency conditions for without and with the proposed Wind Farms. The table lists the limiting facilities and associated contingencies that cause overloads, along with a comparison of facility loadings expressed both in MVA and in percent on Rate A without and with the proposed Wind Farms.

The Table 4.4 violations were screened to identify injection constraints. For the purposes of the screening, overloads on facilities that are in the electrical vicinity of the Leland Olds and Groton substations were considered to be injection constraints.

These facilities include the following:

Leland Olds 345/230 kV Transformer #1: This transformer became overloaded above its normal 250 MVA rating both in the pre- and post-project cases following the loss of the parallel #2 transformer. Post-contingency loadings are 280 MVA (pre-project case) vs. 368 MVA (post-project case). The emergency rating on this transformer is 312 MVA. One possible solution to mitigate the post-project overload is to replace transformer #1 with a larger transformer (say 400 MVA).

Leland Olds – Washburn – Bismark 230 kV line: Several contingencies overloaded this 230 kV line in the post-project case. The most limiting contingency is the loss of the 345 kV segment between Groton and the GI-0619 wind farm. Corresponding post-contingency loadings are 312 MVA (pre-project)

and 364 MVA (post-project). The conductor rating on the Leland Olds – Washburn - Bismark 230 kV line however, is 398 MVA (Rate B in the power flow case), thus suggesting that this loading should be of no major concern (i.e., probably the result of terminal equipment such as a wavetrap or a current transformer).

Groton-Bristol 115 kV line: This transmission line (Rate A =120 MVA, Rate C=122 MVA) became overloaded following the loss of the Groton-Watertown 345 kV line. Post-contingency loadings are 134 MVA (pre-project) vs. 153 MVA (post-project). The overload may be addressed by upgrading or reconductoring the transmission line.

Groton-Ordway 115 kV line: This transmission line (Rate A =80 MVA, Rate C=88 MVA) is overloaded following the loss of the Groton-Watertown 345 kV line. Post-contingency loadings are 79 MVA (pre-project) and 90 MVA (post-project). The Rate B conductor rating on this line is 125 MVA. Mitigation of the post-project overload may require terminal equipment replacement/adjustment.

Groton-Redfield 115 kV line: As above, this transmission line (Rate A =80 MVA, Rate C=88 MVA) is overloaded following the loss of the Groton-Watertown 345 kV line. Post-contingency loadings are 91 MVA (pre-project) and 118 MVA (post-project). The Rate B conductor rating on this line is 128 MVA. Mitigation of this overload may require terminal equipment replacement/adjustment.

Groton-Aberdeen 115 kV line: This transmission line (Rate A=120 MVA, Rate C=132 MVA) is overloaded following the loss of the Groton-Watertown 345 kV line. Corresponding post-contingency loadings are 145 MVA (pre-project) and 176 MVA (post-project). The Rate B conductor rating on this line is 178 MVA. Mitigation of this overload may require terminal equipment replacement/adjustment.

Overloads were also observed on several other transmission facilities. In the context of this system impact study, these overloads are not considered injection related constraints and therefore will only be addressed if they appear during the transmission service approval process for this project.

- Broadland-Huron 230 kV line
- Broadland 345/230 kV transformer
- Huron-Redfield 115 kV line
- Split Rock – White 345 kV line
- Watertown 345/230 kV transformer
- Heskett-Ward-Bismark 230 kV lines
- Brookings-Aurora 115 kV line
- Blair-Granite Falls 230 kV line
- Fargo-Sheyenne 230 kV line
- Sheyenne-Maple River 230 kV line

- Maple River 345/230 kV transformers
- Big Stone 230/115 kV transformer
- Hankinson-Wahpeton 230 kV line
- Wahpeton-Fergus Falls 230 kV line
- Ellendale-Oakes 230 kV line
- Center-Square Butte 230 kV line
- Ellendale-G132 POI
- Bemidji-Wilton 115 kV line.

Analysis of post-contingency voltages showed voltage violations at several buses, both with and without the proposed project. Table 4.5 lists the significantly affected bus voltages. The table lists only those buses that are adversely impacted by the addition of the proposed project. A review of this table showed no voltage violations in the immediate electrical vicinity of the Leland Olds and Groton 345 kV substations. Thus, it was concluded that there are no voltage related injection constraints.

4.5 Sensitivity Analysis without GI-0619

At the request of WAPA, a sensitivity analysis was performed without considering the GI-0619 wind farm. A pre-project sensitivity case was developed without GI-0619 (case *a12-sp11aa.sav*). The post-project case was developed from Case *a12* by modeling and dispatching the proposed GI-0616 and GI-0707A projects (case *a14-sp11aa.sav*). Detailed case summaries are given in Appendix B.3 and Appendix B.4. Corresponding one-line diagrams without and with the proposed wind farms are depicted in Figures 4.5 and 4.6 respectively.

System intact and selected contingency analyses were repeated on Case *a12* and Case *a14*. As before, the post-project results were compared against with pre-project case and the significantly affected facilities were identified.

Under system intact conditions, the incremental impact of the proposed GI-0616 & GI-0707A projects on facility loading is insignificant. Significantly affected bus voltages are presented in Table 4.6.

Table 4.7 lists the significantly affected facility loadings for contingency conditions for without and with the proposed Wind Farms. The table lists the limiting facilities and associated contingencies that cause overloads, along with a comparison of facility loadings expressed both in MVA and in percent on Rate A without and with the proposed Wind Farms.

The Table 4.7 violations were screened to identify injection constraints. For the purposes of the screening, overloads on facilities that are in the electrical vicinity of the Leland Olds and Groton substations were considered to be injection constraints.

These facilities include the following:

Leland Olds 345/230 kV Transformer #1: This transformer became overloaded above its 250 MVA normal rating in the post-project case following the loss of the parallel #2 transformer. Post-contingency loading is 309 MVA (post-project case) or 99% based on the emergency rating of 312 MVA.

Groton-Bristol 115 kV line: In the post-project case, this transmission line (Rate A =120 MVA, Rate C=122 MVA) became overloaded following the loss of the Groton-Watertown 345 kV line. Post-contingency loading is 132 MVA (post-project). The Rate B conductor rating on this line is 128 MVA. The overload may be addressed by upgrading or reconductoring the transmission line.

Groton-Redfield 115 kV line: This transmission line (Rate A =80 MVA, Rate C=88 MVA) is overloaded following the loss of the Groton-Watertown 345 kV line. Post-contingency loading is 89 MVA (post-project). The Rate B conductor rating on this line is 128 MVA. Mitigation of this overload may require terminal equipment replacement/adjustment.

Groton-Aberdeen 115 kV line: This transmission line (Rate A=120 MVA, Rate C=132 MVA) is overloaded following the loss of the Groton-Watertown 345 kV line. Corresponding post-contingency loading is 143 MVA (post-project). The Rate B conductor rating on this line is 178 MVA. Mitigation of this overload may require terminal equipment replacement/adjustment.

Overloads were also observed on several other transmission facilities. In the context of this system impact study, these overloads are not considered injection related constraints and therefore will only be addressed if they appear during the transmission service approval process for this project.

- Huron-Redfield 115 kV line
- Split Rock – White 345 kV line
- Watertown 345/230 kV transformer
- Heskett-Ward-Bismark 230 kV lines
- Fargo-Sheyenne 230 kV line
- Maple River 345/230 kV transformers
- Big Stone 230/115 kV transformer
- Hankinson-Wahpeton 230 kV line
- Ellendale-Oakes 230 kV line
- Center-Square Butte 230 kV line
- Bemidji-Wilton 115 kV line.

Analysis of post-contingency voltages showed voltage violations at several buses, both with and without the proposed project. Table 4.8 lists the significantly affected bus voltages. The table lists only those buses that are adversely impacted by the addition of the proposed project. A review of this table showed

no voltage violations in the immediate electrical vicinity of the Leland Olds and Groton 345 kV substations. Thus, it was concluded that there are no voltage related injection constraints.

4.6 Summary

The results of the steady-state analysis indicate that the addition of proposed GI-0616 and GI-0707A wind farms would adversely impact transmission system performance, both under system intact and contingency conditions. Although several transmission facilities were significantly impacted, particular attention was given to facilities in the vicinity of Leland Olds and Groton substations that became overloaded following the addition of the proposed wind farms. It may be possible to mitigate these impacts through the following transmission reinforcements:

1. Replace Leland Olds 345/230 kV transformer #1 with larger transformer bank (say 400 MVA)
2. Upgrade / reconductor Groton – Bristol 115 kV line to allow a post-contingency loading of at least 155 MVA
3. Terminal equipment replacements / adjustments are required on the following facilities to allow increase to corresponding conductor loading limit (Rate B):
   - Leland Olds – Washburn – Bismark 230 kV line
   - Groton – Ordway 115 kV line
   - Groton – Redfield 115 kV line
   - Groton – Aberdeen 115 kV line

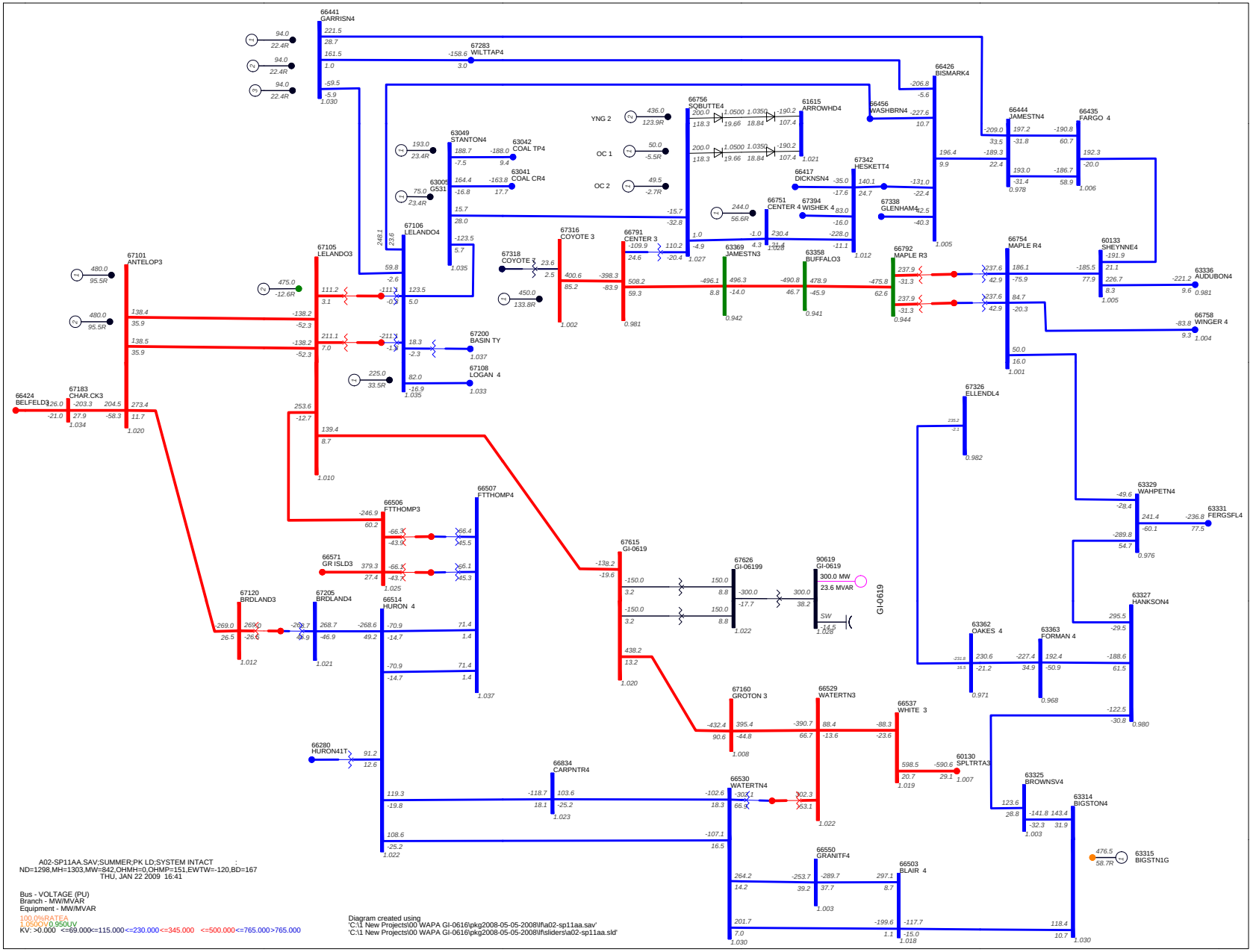

Figure 4.3: North Dakota - Without GI-0616 & GI-0707A (Case a02)

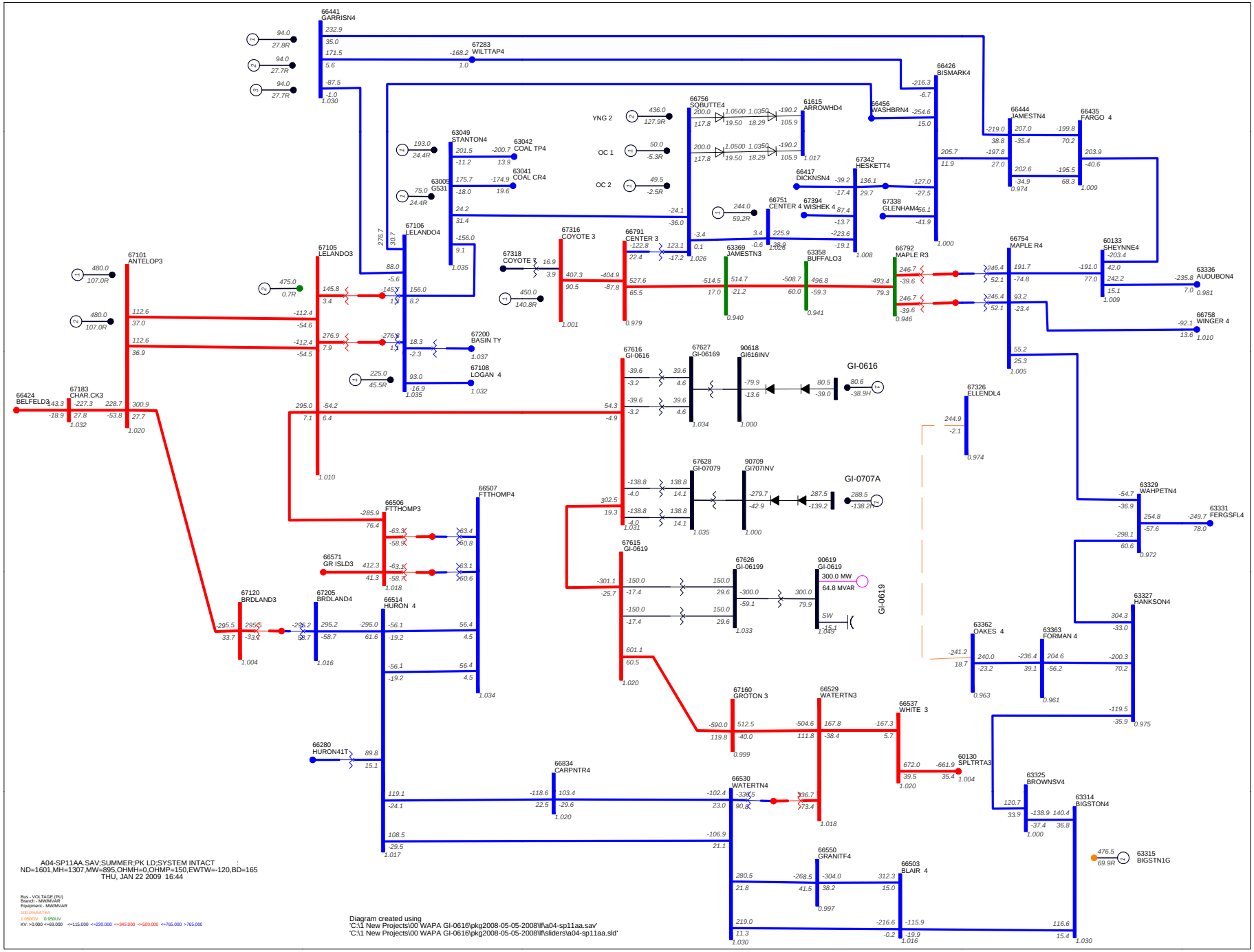

Figure 4.4: North Dakota - With GI-0616 & GI-0707A (Case a04)

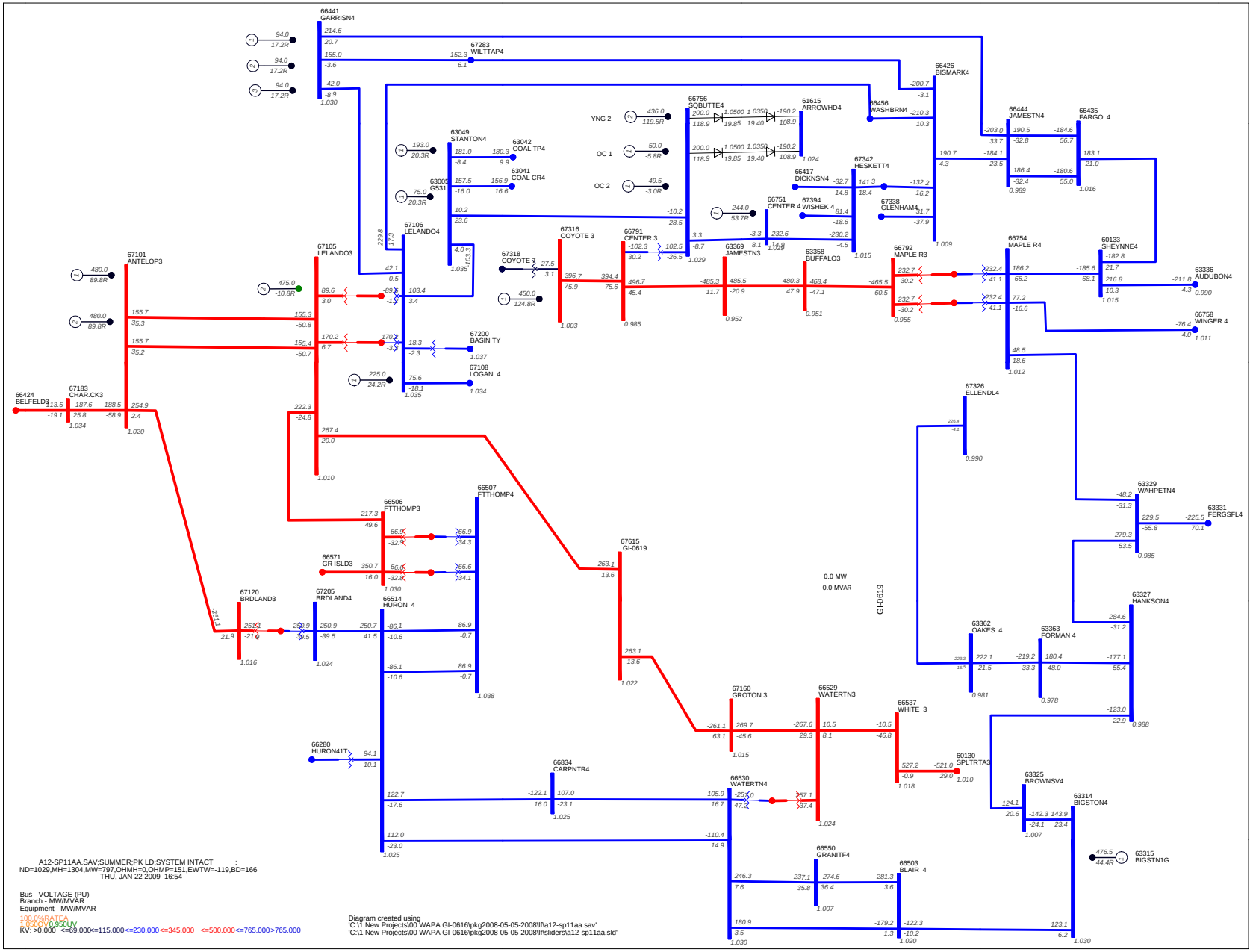

Figure 4.5: North Dakota - Without GI-0616 & GI-0707A, Without GI-0619 (Case a12)

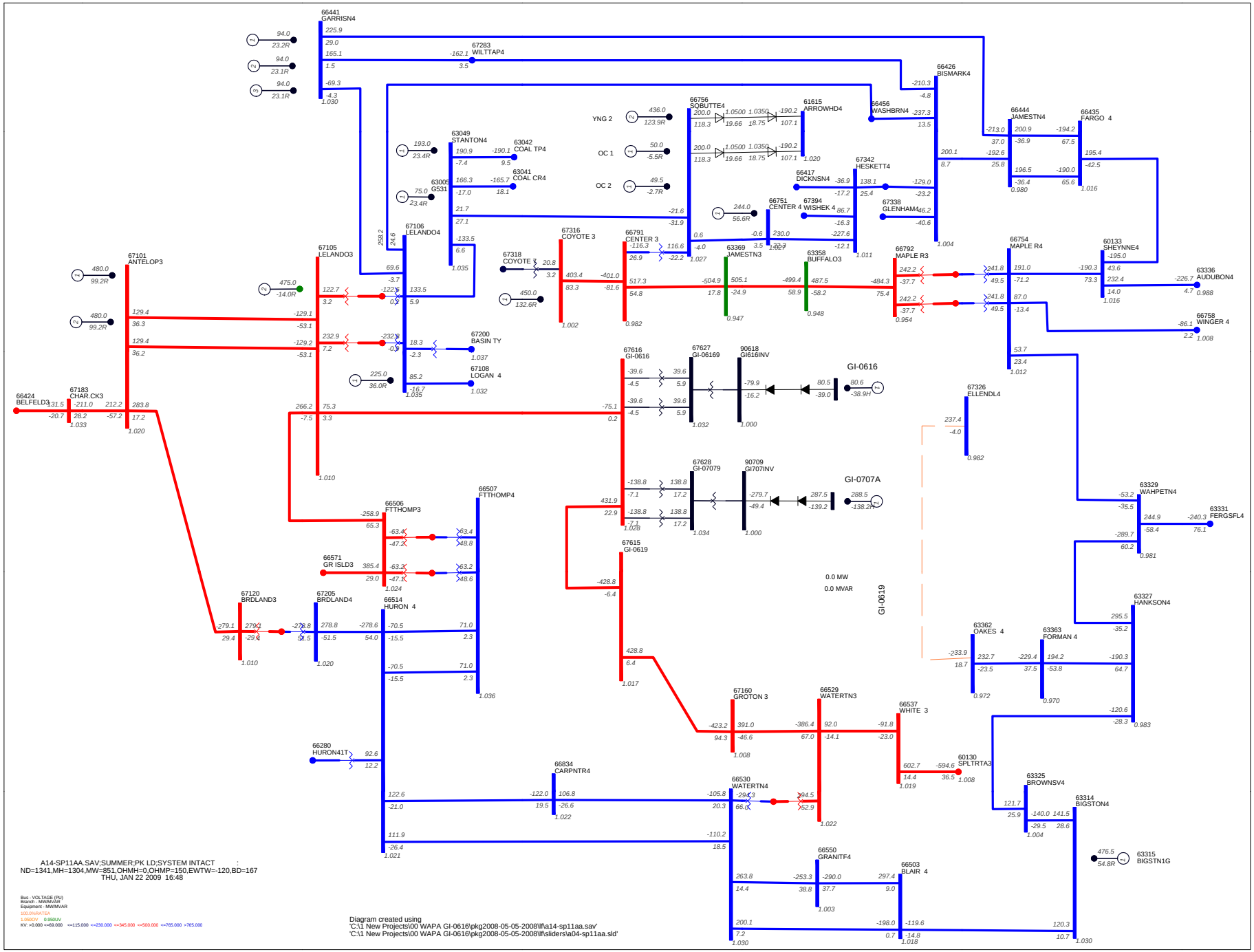

Figure 4.6: North Dakota - With GI-0616 & GI-0707A, Without GI-0619 (Case a14)

Table 4.1: Prior Queued Projects Included in 2011 Summer Peak Case

IS Queue #	MISO Queue #	Queue Date	Point of Interconnect / County	ST	Net Plant Max MW Summer/Winter	In Service Date	Type of Gen. (Fuel)	POI Bus No.	Gen. Bus No.	Comment
(GI-0101a) Done	36922-03	31-Jan-01	Rapid City / Pennington	SD	200		N/A	67268-67269		RCDC (200 MW East)
(GI-0208) Done	37427-01	20-Jun-02	Edgeley / LaMoure	ND	40		Wind	67280	67292	
(GI-0209) Done	37427-02	20-Jun-02	Ft Thompson / Buffalo	SD	40		Wind	67281	67293	
(GI-0218) Done	37596-01	06-Dec-02	Clark / Clark	SD	~~15~~ 7.5		Waste Heat	66291	67278	
(GI-0219) Done	37596-02	06-Dec-02	Watertown / Codington	SD	~~15~~ 7.5		Waste Heat	66224	67279	
(GI-0314) Done	37774-02	03-Jun-03	Aberdeen / Brown	SD	8		Waste Heat	66290	67277	
(GI-0315) Done	37775-01	13-Jun-03	Solen / Morton	ND	8		Waste Heat	66257	67276	
(GI-0316) Done	37837-03	04-Aug-03	Groton / Brown	SD	120		Gas	66512	67274	Groton 1
(GI-0327) Done	37949-01	24-Nov-03	Flandreau / Moody	SD	~~20~~ 10		Diesel	66505	66229	
(GI-0508)	38460-01	18-Apr-05	Bism-Garr 230kV #1 / Burleigh	ND	50		Wind	67283	67295	Wilton 1, Out of queue study
(GI-0608)	38912-03	14-Jul-06	Groton / Brown	SD	120		Gas	66512	67274	Groton 2, Out of Queue SIS
(TI-0301)	37721-01	10-Apr-03	White / Brookings	SD	N/A		TI	In-Service	In-Service	Transmission Int.
G132	37151-01	17-Sep-01	Dickey	ND	180		Wind	67396	67399	
G255 & G176	37517-01	18-Sep-02	Brookings	SD	100 each		Wind	60381	G255: 60071,-74 G176: 90176	Ridge Wind
G256	37519-01	20-Sep-02	Dawson	MT	45		Gas	67332	67332	
G291	37657-01	05-Feb-03	LaMoure	ND	19		Wind	63159	63161	
G370	37911-02	17-Oct-03	Minnehaha	SD	205		Gas	60129	60058	Anson #4
G408	38048-01	02-Mar-04	McHenry	ND	12		Wind	63089	63087	Velva Wind
G502	38425-01	14-Mar-05	Oliver	ND	50		Wind	66756	61603	Oliver 1
G767	39161-01	20-Mar-07	Fallon	MT	30		Wind	67394	67393	Diamond Willow Plant
GM0100/200	38971-03	11-Sep-06	Cavalier	ND	100		Wind	66709	66881	Langdon Wind
GS659	38915-01	17-Jul-06	Oliver	ND	50		Wind	66756	61606	Oliver 2
(GI-0404)	38131-03	24-May-04	Killdeer / Dunn	ND	8	Fall 2008	Waste Heat			
(GI-0405)	38131-04	24-May-04	White / Brookings	SD	8	Fall 2009	Waste Heat			
(GI-0503)	38380-03	28-Jan-05	Minot / Ward	ND	100	Fall 2009	wind			
(GI-0614a)	38974-01	14-Sep-06	Culbertson / Roosevelt	MT	10	Fall 2009	waste heat			
(GI-0615)	39008-01	18-Oct-06	Bism-Garr 230kV #1 / Burleigh	ND	50	Fall 2008	wind			
(GI-0619)	39070-02	19-Dec-06	Leland Olds-Groton 345 / Dickey	ND	300	1/10/2010	Wind	67615	90619	
(GI-0704)	39157-01	16-Mar-07	White / Brookings	SD	240	6/1/2012	Gas	66537	67996	Deer Creek Project @ White 345 kV
G531	38534-01	01-Jul-05	Mercer	ND	68	4/1/2009	Coal	63049	63005	NORDAG
G607	38777-01	01-Mar-06	Mercer	ND	25	10/25/2008	Coal	67316	67315	NORDAG
G645	38863-02	26-May-06	Stutsman	ND	50	11/1/2008	Coal	63270	63645	
G710	39059-04	08-Dec-06	McIntosh	ND	10	1/1/2008	Waste Heat	67395	67302	NORDAG 2A

~green highlight is in-service
~yellow highlight will be in service by 2011 and already studied.

Table 4.2: List of Excluded Projects - 2011 Summer Peak Case

IS Queue #	MISO Queue #	Queue Date	Point of Interconnect / County	ST	Net Plant Max MW	In Service Date	Type of Gen. (Fuel)	POI Bus No.	Gen. Bus No.	Comment
(GI-0512)	38593-01	29-Aug-05	Edgeley-Ordway 115kV / Dickey	ND	49.5	10/1/2007	Wind	67280	99015	
G248	37488-01	20-Aug-02	Dickey	ND	19	12/1/2003	Wind	67327	90327	Ellendale Wind
G359	38073-01	27-Mar-04	Dickey	ND	150	12/1/2005	Wind	67389	97390	
G392	38020-01	03-Feb-04	Grant	SD	600	12/1/2013	Coal	63314	63317	Big Stone II with Alternative I Transmission (230 kV)
G622	38827-01	20-Apr-06	Dickey	ND	150	9/1/2007	Wind	67023	67023	NORDAG 2
G624	38832-01	25-Apr-06	McIntosh	ND	150	6/1/2008	Wind	67394	67024 & 68024	NORDAG 2
G690	39006-01	16-Oct-06	Dickey	ND	200	12/1/2008	Wind	90060	90062	NORDAG 2
G713	39062-02	11-Dec-06	Dickey	ND	200	12/1/2008	Wind	67396	90046	NORDAG 2

Table 4.3: Significantly Affected Bus High Voltages – System Intact Conditions (Without and with GI-0616 GI-0707A)

NUM	NAM	KV	PRE-PROJECT	POST-PROJECT	CHAN
60134	SHEYNNE7	115	1.0632	1.0756	0.0124
63203	MAPLTN 7	115	1.0629	1.0753	0.0124
63204	FARGO TP	115	1.0633	1.0757	0.0124
66761	MODEROW7	115	1.0621	1.0742	0.0121

Table 4.4: Significantly Affected Facilities - N-1 Contingency Conditions (Without and with GI-0616 GI-0707A)

MONITORED ELEMENT	RATEA	RATEC	PRE-PROJECT		POST-PROJECT		CHANGE		TDF	CONTINGENCY
			%	MVA	%	MVA	%	MVA		
67105 LELANDO3 345 67201 LELND1TY 345 1	250.0	300.0	112.1	280.2	147.3	368.3	35.2	88.1	23.8%	LELND2TY
67201 LELND1TY 345 67106 LELANDO4 230 1	250.0	300.0	112.1	280.2	147.3	368.3	35.2	88.1	23.8%	LELND2TY
66456 WASHBRN4 230 67106 LELANDO4 230 1	319.0	351.0	96.0	312.2	113.0	364.2	17.0	52.0	14.1%	67160 GROTON 3 345 - 67615 GI-0619 345 ckt 1
	319.0	351.0	96.4	313.5	106.3	345.1	9.9	31.6	8.5%	66426 BISMARK4 230 - 67283 WILTTAP4 230 ckt 1
	319.0	351.0	92.4	300.9	103.8	337.2	11.4	36.3	9.8%	105 2
	319.0	351.0	93.1	303.2	101.9	331.0	8.8	27.8	7.5%	66751 CENTER 4 230 - 67342 HESKETT4 230 ckt 1
	319.0	351.0	91.5	298.2	101.4	329.7	9.9	31.5	8.5%	66441 GARRISN4 230 - 67283 WILTTAP4 230 ckt 1
66426 BISMARK4 230 66456 WASHBRN4 230 1	320.0	352.0	91.3	289.5	108.2	337.6	16.9	48.1	13.0%	67160 GROTON 3 345 - 67615 GI-0619 345 ckt 1
	320.0	352.0	91.6	298.9	101.5	330.4	9.9	31.5	8.5%	66426 BISMARK4 230 - 67283 WILTTAP4 230 ckt 1
66514 HURON 4 230 67205 BRDLAND4 230 1	400.0	480.0	90.0	362.4	106.6	423.3	16.6	60.9	16.5%	67160 GROTON 3 345 - 67615 GI-0619 345 ckt 1
67120 BRDLAND3 345 67204 BRDLNDTY 345 1	400.0	480.0	91.1	364.2	106.2	424.8	15.1	60.6	16.4%	67160 GROTON 3 345 - 67615 GI-0619 345 ckt 1
67204 BRDLNDTY 345 67205 BRDLAND4 230 1	400.0	480.0	91.0	364.2	106.2	424.8	15.2	60.6	16.4%	67160 GROTON 3 345 - 67615 GI-0619 345 ckt 1
66515 HURON 7 115 66535 REDFELD7 115 1	80.0	88.0	105.1	83.3	140.7	107.6	35.6	24.3	6.6%	66529 WATERTN3 345 - 67160 GROTON 3 345 ckt 1
66512 GROTON 7 115 66533 BRISTOL7 115 1	120.0	122.0	109.0	133.5	135.3	152.5	26.3	19.0	5.1%	66529 WATERTN3 345 - 67160 GROTON 3 345 ckt 1
66512 GROTON 7 115 66534 ORDWAY 7 115 1	80.0	88.0	96.2	78.5	115.4	90.1	19.2	11.6	3.1%	66529 WATERTN3 345 - 67160 GROTON 3 345 ckt 1
66512 GROTON 7 115 66535 REDFELD7 115 1	80.0	88.0	111.0	90.6	147.3	118.3	36.3	27.7	7.5%	66529 WATERTN3 345 - 67160 GROTON 3 345 ckt 1
66512 GROTON 7 115 67402 ABDNSBT7 115 1	120.0	132.0	118.4	145.0	145.7	175.5	27.3	30.5	8.2%	66529 WATERTN3 345 - 67160 GROTON 3 345 ckt 1
	120.0	132.0	103.4	122.8	114.5	135.1	11.1	12.3	3.3%	67326 ELLENDL4 230 - 67396 G132 POI 230 ckt 1
60126 SPLT RK3 345 60130 SPLTRTA3 345 1	717.0	789.0	102.4	736.9	114.4	819.9	12.0	83.0	22.4%	110 1
	717.0	789.0	100.0	719.5	111.1	797.7	11.1	78.2	21.1%	110 2
	717.0	789.0	98.7	710.3	110.8	793.6	12.1	83.3	22.5%	WATERT1T
	717.0	789.0	94.5	680.4	105.7	756.2	11.2	75.8	20.5%	60279 BUFFRID7 115 - 60381 YANKEE 7 115 ckt 1
	717.0	789.0	90.5	652.9	101.5	729.9	11.0	77.0	20.8%	130 2
	717.0	789.0	90.2	650.8	101.1	727.4	10.9	76.6	20.7%	130 1
	717.0	789.0	89.9	648.0	100.6	723.4	10.7	75.4	20.4%	108 1
	717.0	789.0	89.6	645.7	100.3	720.9	10.7	75.2	20.3%	108 2
	717.0	789.0	89.9	649.1	100.3	722.2	10.4	73.1	19.8%	60362 CHANRMB7 115 - 60384 FENTON 7 115 ckt 1
60130 SPLTRTA3 345 66537 WHITE 3 345 1	720.0	792.0	102.0	736.9	113.9	819.9	11.9	83.0	22.4%	110 1
	720.0	792.0	99.5	719.5	110.7	797.7	11.2	78.2	21.1%	110 2
	720.0	792.0	98.4	721.2	110.5	805.7	12.1	84.5	22.8%	WATERT1T
	720.0	792.0	94.3	688.5	105.6	763.4	11.3	74.9	20.2%	60279 BUFFRID7 115 - 60381 YANKEE 7 115 ckt 1
	720.0	792.0	90.2	662.6	101.1	729.9	10.9	67.3	18.2%	130 2
	720.0	792.0	89.9	660.4	100.7	727.4	10.8	67.0	18.1%	130 1
	720.0	792.0	89.5	648.1	100.2	723.4	10.7	75.3	20.4%	108 1

%: Percentage of continuous facility rating (Rate A).

Table 4.4 (Cont.): Significantly Affected Facilities - N-1 Contingency Conditions (Without and with GI-0616 GI-0707A)

MONITORED ELEMENT	RATEA	RATEC	PRE-PROJECT		POST-PROJECT		CHANGE		TDF	CONTINGENCY
			%	MVA	%	MVA	%	MVA		
66236 WATERT1T 345 66529 WATERTN3 345 1	400.0	500.0	151.2	604.6	169.2	676.8	18.0	72.2	19.5%	60130 SPLTRTA3 345 - 66537 WHITE 3 345 ckt 1
	400.0	500.0	151.1	604.6	169.1	676.4	18.0	71.8	19.4%	60126 SPLT RK3 345 - 60130 SPLTRTA3 345 ckt 1
	400.0	500.0	94.0	376.1	118.6	474.4	24.6	98.3	26.6%	66529 WATERTN3 345 - 66537 WHITE 3 345 ckt 1
	400.0	500.0	93.3	373.3	117.5	470.1	24.2	96.8	26.2%	120
	400.0	500.0	101.1	404.6	112.0	448.1	10.9	43.5	11.8%	60286 NOBLES 3 345 - 34006 LAKEFLD3 345 ckt 1
	400.0	500.0	101.5	406.0	109.5	437.8	8.0	31.8	8.6%	63314 BIGSTON4 230 - 63315 BIGSTN1G 24 ckt 1
	400.0	500.0	99.0	396.1	108.5	434.0	9.5	37.9	10.2%	60108 WILMART3 345 - 60365 FIELD_S3 345 ckt 1
	400.0	500.0	99.0	396.1	108.5	434.0	9.5	37.9	10.2%	60364 FIELD_N3 345 - 60365 FIELD_S3 345 ckt 1
	400.0	500.0	99.1	396.2	108.5	434.0	9.4	37.8	10.2%	60331 LKFLDXL3 345 - 60364 FIELD_N3 345 ckt 1
	400.0	500.0	91.5	365.9	100.9	403.8	9.4	37.9	10.2%	67569 HENDAY 4 230 - 67681 LIMEST G 13.8 ckt 1
	400.0	500.0	89.7	358.7	100.8	403.1	11.1	44.4	12.0%	67101 ANTELOP3 345 - 67120 BRDLAND3 345 ckt 1
	400.0	500.0	89.7	358.7	100.8	403.1	11.1	44.4	12.0%	66514 HURON 4 230 - 67205 BRDLAND4 230 ckt 1
	400.0	500.0	89.7	358.7	100.8	403.1	11.1	44.4	12.0%	BRDLNDTY
	400.0	500.0	90.9	363.4	100.8	403.1	9.9	39.7	10.7%	60331 LKFLDXL3 345 - 34006 LAKEFLD3 345 ckt 1
66236 WATERT1T 345 66530 WATERTN4 230 1	400.0	500.0	152.3	609.3	170.4	681.5	18.1	72.2	19.5%	60130 SPLTRTA3 345 - 66537 WHITE 3 345 ckt 1
	400.0	500.0	152.3	609.2	170.2	680.9	17.9	71.7	19.4%	60126 SPLT RK3 345 - 60130 SPLTRTA3 345 ckt 1
	400.0	500.0	94.9	379.6	120.3	481.2	25.4	101.6	27.5%	66529 WATERTN3 345 - 66537 WHITE 3 345 ckt 1
	400.0	500.0	94.2	376.7	119.1	476.6	24.9	99.9	27.0%	120
	400.0	500.0	102.0	408.0	113.2	452.9	11.2	44.9	12.1%	60286 NOBLES 3 345 - 34006 LAKEFLD3 345 ckt 1
	400.0	500.0	102.5	409.8	110.5	442.0	8.0	32.2	8.7%	63314 BIGSTON4 230 - 63315 BIGSTN1G 24 ckt 1
	400.0	500.0	99.9	399.6	109.6	438.3	9.7	38.7	10.5%	60364 FIELD_N3 345 - 60365 FIELD_S3 345 ckt 1
	400.0	500.0	99.9	399.6	109.6	438.3	9.7	38.7	10.5%	60108 WILMART3 345 - 60365 FIELD_S3 345 ckt 1
	400.0	500.0	99.9	399.7	109.6	438.3	9.7	38.6	10.4%	60331 LKFLDXL3 345 - 60364 FIELD_N3 345 ckt 1
	400.0	500.0	90.5	362.2	102.1	408.6	11.6	46.4	12.5%	66514 HURON 4 230 - 67205 BRDLAND4 230 ckt 1
	400.0	500.0	90.5	362.2	102.1	408.6	11.6	46.4	12.5%	67101 ANTELOP3 345 - 67120 BRDLAND3 345 ckt 1
	400.0	500.0	90.5	362.2	102.1	408.6	11.6	46.4	12.5%	BRDLNDTY
	400.0	500.0	90.5	362.2	102.1	408.6	11.6	46.4	12.5%	67120 BRDLAND3 345 - 67204 BRDLNDTY 345 ckt 1
	400.0	500.0	90.5	362.2	102.1	408.6	11.6	46.4	12.5%	67204 BRDLNDTY 345 - 67205 BRDLAND4 230 ckt 1
	400.0	500.0	92.2	368.8	102.0	408.1	9.8	39.3	10.6%	67569 HENDAY 4 230 - 67681 LIMEST G 13.8 ckt 1
67296 WARD 4 230 67342 HESKETT4 230 1	320.0	352.0	115.7	367.2	121.8	385.4	6.1	18.2	4.9%	105 1
66426 BISMARK4 230 67296 WARD 4 230 1	320.0	352.0	112.9	358.5	119.1	376.7	6.2	18.2	4.9%	105 1
66474 AURORA 7 115 66504 BROOKNG7 115 1	120.0	125.0	89.3	108.2	100.2	120.8	10.9	12.6	3.4%	60126 SPLT RK3 345 - 60130 SPLTRTA3 345 ckt 1
	120.0	125.0	89.3	108.2	100.1	120.7	10.8	12.5	3.4%	60130 SPLTRTA3 345 - 66537 WHITE 3 345 ckt 1
66503 BLAIR 4 230 66550 GRANITF4 230 1	398.0	425.0	99.8	401.0	105.9	425.3	6.1	24.3	6.6%	66530 WATERTN4 230 - 66550 GRANITF4 230 ckt 1
66522 SUMMIT-7 115 66533 BRISTOL7 115 1	120.0	128.0	98.8	115.5	124.7	140.5	25.9	25.0	6.8%	66529 WATERTN3 345 - 67160 GROTON 3 345 ckt 1

%: Percentage of continuous facility rating (Rate A).

Table 4.4 (Cont.): Significantly Affected Facilities - N-1 Contingency Conditions (Without and with GI-0616 GI-0707A)

MONITORED ELEMENT	RATEA	RATEC	PRE-PROJECT		POST-PROJECT		CHANGE		TDF	CONTINGENCY
			%	MVA	%	MVA	%	MVA		
60133 SHEYNNE4 230 66435 FARGO 4 230 1	391.0	391.0	106.7	404.2	114.3	434.2	7.6	30.0	8.1%	63358 BUFFALO3 345 - 63369 JAMESTN3 345 ckt 1
	391.0	391.0	107.1	411.0	113.9	436.8	6.8	25.8	7.0%	63369 JAMESTN3 345 - 66791 CENTER 3 345 ckt 1
	391.0	391.0	105.6	400.7	112.5	422.3	6.9	21.6	5.8%	220
	391.0	391.0	105.2	401.5	112.3	423.2	7.1	21.7	5.9%	63358 BUFFALO3 345 - 66792 MAPLE R3 345 ckt 1
60133 SHEYNNE4 230 66754 MAPLE R4 230 1	318.0	391.0	104.4	327.4	109.4	346.4	5.0	19.0	5.1%	60133 SHEYNNE4 230 - 66435 FARGO 4 230 ckt 1
63189 MAPLER1Y 345 66754 MAPLE R4 230 1	336.0	420.0	137.9	463.4	143.9	483.5	6.0	20.1	5.4%	MAPLER2Y
63189 MAPLER1Y 345 66792 MAPLE R3 345 1	336.0	420.0	137.9	463.4	143.9	483.5	6.0	20.1	5.4%	MAPLER2Y
63190 MAPLER2Y 345 66754 MAPLE R4 230 1	336.0	420.0	137.9	463.4	143.9	483.5	6.0	20.1	5.4%	MAPLER1Y
63190 MAPLER2Y 345 66792 MAPLE R3 345 1	336.0	420.0	137.9	463.4	143.9	483.5	6.0	20.1	5.4%	MAPLER1Y
63195 BIGSTONY 230 63214 BIGSTON7 115 1	233.0	291.0	135.7	316.1	141.4	329.4	5.7	13.3	3.6%	110 2
63195 BIGSTONY 230 63314 BIGSTON4 230 1	233.0	291.0	135.7	316.2	141.3	329.3	5.6	13.1	3.5%	110 2
63327 HANKSON4 230 63329 WAHPETN4 230 1	320.0	352.0	122.9	368.9	127.9	380.9	5.0	12.0	3.2%	63358 BUFFALO3 345 - 63369 JAMESTN3 345 ckt 1
	320.0	352.0	121.9	370.3	126.7	381.5	4.8	11.2	3.0%	63369 JAMESTN3 345 - 66791 CENTER 3 345 ckt 1
	320.0	352.0	117.7	360.1	122.5	372.2	4.8	12.1	3.3%	110 2
	320.0	352.0	105.5	325.9	110.1	338.1	4.6	12.2	3.3%	60126 SPLT RK3 345 - 60130 SPLTRTA3 345 ckt 1
	320.0	352.0	105.5	325.8	110.0	337.9	4.5	12.1	3.3%	60130 SPLTRTA3 345 - 66537 WHITE 3 345 ckt 1
	320.0	352.0	104.0	323.3	108.1	334.7	4.1	11.4	3.1%	60133 SHEYNNE4 230 - 66435 FARGO 4 230 ckt 1
	320.0	352.0	96.9	303.0	101.9	316.3	5.0	13.3	3.6%	120
	320.0	352.0	96.3	301.3	101.1	314.1	4.8	12.8	3.5%	66529 WATERTN3 345 - 66537 WHITE 3 345 ckt 1
63329 WAHPETN4 230 63331 FERGSFL4 230 1	320.0	352.0	98.1	303.3	103.8	318.8	5.7	15.5	4.2%	60133 SHEYNNE4 230 - 63336 AUDUBON4 230 ckt 1
63362 OAKES 4 230 67326 ELLENDL4 230 1	240.0	264.0	113.1	261.5	123.6	277.1	10.5	15.6	4.2%	66529 WATERTN3 345 - 67160 GROTON 3 345 ckt 1
	240.0	264.0	116.4	267.6	123.3	279.3	6.9	11.7	3.2%	110 1
	240.0	264.0	--	--	107.9	248.4	--	--	--	67615 GI-0619 345 - 67616 GI-0616 345 ckt 1
66791 CENTER 3 345 66756 SQBUTTE4 230 1	336.0	352.0	120.1	403.6	125.5	421.8	5.4	18.2	4.9%	66791 CENTER 3 345 - 67316 COYOTE 3 345 ckt 1
	336.0	352.0	111.5	374.7	117.1	393.6	5.6	18.9	5.1%	SINGLE-046
67326 ELLENDL4 230 67396 G132 POI 230 1	318.7	318.7	95.4	292.2	103.0	308.6	7.6	16.4	4.4%	67160 GROTON 3 345 - 67615 GI-0619 345 ckt 1
63245 WILTON 7 115 63246 BEMIDJI7 115 1	120.0	132.0	--	--	110.4	133.3	--	--	--	67615 GI-0619 345 - 67616 GI-0616 345 ckt 1

%: Percentage of continuous facility rating (Rate A).

Table 4.5: Significantly Affected Bus High Voltages – Contingency Conditions (Without and with GI-0616 GI-0707A)

NUM	NAM	KV	CONTINGENCY	PRE-PROJECT	POST-PROJECT	CHAN
60134	SHEYNNE7	115	535 1	1.1054	1.1262	0.0208
60134	SHEYNNE7	115	535 2	1.0885	1.1115	0.0230
60134	SHEYNNE7	115	60135 CASS CO7 115 - 60137 REDRIVR7 115 ckt 1	1.0845	1.1081	0.0236
60135	CASS CO7	115	535 2	1.0842	1.1073	0.0231
60135	CASS CO7	115	60135 CASS CO7 115 - 60137 REDRIVR7 115 ckt 1	1.0824	1.1060	0.0236
60172	SHYSWCP7	115	535 1	1.1450	1.1771	0.0321
60172	SHYSWCP7	115	535 2	1.1275	1.1617	0.0342
60172	SHYSWCP7	115	60135 CASS CO7 115 - 60137 REDRIVR7 115 ckt 1	1.1234	1.1581	0.0347
61696	TAC HBR6	138	67105 LELANDO3 345 - 67616 GI-0616 345 ckt 1	--	1.0508	--
61696	TAC HBR6	138	67615 GI-0619 345 - 67616 GI-0616 345 ckt 1	--	1.0508	--
61696	TAC HBR6	138	67616 GI-0616 345 - 67627 GI-06169 34.5 ckt 1	--	1.0508	--
61696	TAC HBR6	138	67616 GI-0616 345 - 67627 GI-06169 34.5 ckt 2	--	1.0508	--
61696	TAC HBR6	138	67616 GI-0616 345 - 67628 GI-07079 34.5 ckt 1	--	1.0508	--
61696	TAC HBR6	138	67616 GI-0616 345 - 67628 GI-07079 34.5 ckt 2	--	1.0508	--
63203	MAPLTN 7	115	535 1	1.1052	1.1260	0.0208
63203	MAPLTN 7	115	535 2	1.0882	1.1113	0.0231
63203	MAPLTN 7	115	60135 CASS CO7 115 - 60137 REDRIVR7 115 ckt 1	1.0842	1.1078	0.0236
63204	FARGO TP	115	535 1	1.1055	1.1264	0.0209
63204	FARGO TP	115	535 2	1.0886	1.1116	0.0230
63204	FARGO TP	115	60135 CASS CO7 115 - 60137 REDRIVR7 115 ckt 1	1.0846	1.1082	0.0236
66761	MODEROW7	115	60135 CASS CO7 115 - 60137 REDRIVR7 115 ckt 1	1.0840	1.1076	0.0236

Table 4.5 (Cont.): Significantly Affected Bus Low Voltages – Contingency Conditions (Without and with GI-0616 GI-0707A)

NUM	NAM	KV	CONTINGENCY	PRE-PROJECT	POST-PROJECT	CHAN
60146	GRANCTY7	115	780 1	0.6340	0.6188	-0.0152
60154	SAUK RV7	115	780 1	0.6843	0.6714	-0.0129
60161	STREGIS7	115	780 1	0.6154	0.6000	-0.0154
60163	WST CLD7	115	780 1	0.6742	0.6608	-0.0134
60164	XRDS 7	115	780 1	0.6464	0.6319	-0.0145
60165	MEI INT7	115	780 1	0.6539	0.6396	-0.0143
61636	SWANVIL7	115	780 1	0.8704	0.8592	-0.0112
61637	PLATTRV7	115	780 1	0.7673	0.7551	-0.0122
61638	AKELEY7	115	63245 WILTON 7 115 - 63246 BEMIDJI7 115 ckt 1	0.8849	0.8738	-0.0111
61638	AKELEY7	115	565	0.8868	0.8759	-0.0109
61647	LONG PR7	115	780 1	0.9088	0.8978	-0.0110
61649	BLNCHRD7	115	780 1	0.8406	0.8293	-0.0113
61650	LITTLEF7	115	780 1	0.8190	0.8078	-0.0112
62268	LANGLTP7	115	780 1	0.7691	0.7569	-0.0122
62269	LANGOLA7	115	780 1	0.7673	0.7551	-0.0122
62411	LONG LK7	115	67615 GI-0619 345 - 67616 GI-0616 345 ckt 1	--	0.9433	--
62814	WESTWD 7	115	780 1	0.6698	0.6562	-0.0136
62819	FSCHRHL7	115	780 1	0.7005	0.6872	-0.0133
62858	ROCKVLL7	115	780 1	0.6840	0.6711	-0.0129
63246	BEMIDJI7	115	63245 WILTON 7 115 - 63246 BEMIDJI7 115 ckt 1	0.8130	0.7972	-0.0158
63246	BEMIDJI7	115	565	0.8156	0.8000	-0.0156
63247	CASS LK7	115	63245 WILTON 7 115 - 63246 BEMIDJI7 115 ckt 1	0.8095	0.7944	-0.0151
63247	CASS LK7	115	565	0.8120	0.7970	-0.0150
63248	CASS N 7	115	63245 WILTON 7 115 - 63246 BEMIDJI7 115 ckt 1	0.8092	0.7941	-0.0151
63248	CASS N 7	115	565	0.8117	0.7967	-0.0150
63258	BUFFALO7	115	60134 SHEYNNE7 115 - 60172 SHYSWCP7 115 ckt 1	0.9302	0.9149	-0.0153
63259	ALICE 7	115	60134 SHEYNNE7 115 - 60172 SHYSWCP7 115 ckt 1	0.9306	0.9154	-0.0152
63260	ENDERLN7	115	230	0.8089	0.7909	-0.0180
63260	ENDERLN7	115	220	0.8721	0.8513	-0.0208
63260	ENDERLN7	115	63358 BUFFALO3 345 - 66792 MAPLE R3 345 ckt 1	0.8763	0.8548	-0.0215
63260	ENDERLN7	115	63358 BUFFALO3 345 - 63369 JAMESTN3 345 ckt 1	0.8716	0.8565	-0.0151
63260	ENDERLN7	115	63369 JAMESTN3 345 - 66791 CENTER 3 345 ckt 1	0.8847	0.8699	-0.0148
63260	ENDERLN7	115	66529 WATERTN3 345 - 67160 GROTON 3 345 ckt 1	0.9044	0.8716	-0.0328
63260	ENDERLN7	115	63314 BIGSTON4 230 - 63325 BROWNSV4 230 ckt 1	0.8881	0.8744	-0.0137
63260	ENDERLN7	115	545	0.8901	0.8771	-0.0130
63260	ENDERLN7	115	63325 BROWNSV4 230 - 63327 HANKSON4 230 ckt 1	0.8907	0.8771	-0.0136
63260	ENDERLN7	115	110 1	0.8994	0.8829	-0.0165
63260	ENDERLN7	115	67326 ELLENDL4 230 - 67396 G132 POI 230 ckt 1	0.9067	0.8941	-0.0126
63260	ENDERLN7	115	66445 JAMESTN7 115 - 66454 VALLEYC7 115 ckt 1	0.9051	0.8947	-0.0104
63260	ENDERLN7	115	63362 OAKES 4 230 - 67326 ELLENDL4 230 ckt 1	0.9107	0.8970	-0.0137
63260	ENDERLN7	115	63362 OAKES 4 230 - 63363 FORMAN 4 230 ckt 1	0.9124	0.8989	-0.0135
63260	ENDERLN7	115	110 2	0.9103	0.8993	-0.0110
63261	LISBON 7	115	230	0.8154	0.7976	-0.0178
63261	LISBON 7	115	220	0.8780	0.8574	-0.0206
63261	LISBON 7	115	63358 BUFFALO3 345 - 66792 MAPLE R3 345 ckt 1	0.8822	0.8609	-0.0213
63261	LISBON 7	115	63358 BUFFALO3 345 - 63369 JAMESTN3 345 ckt 1	0.8775	0.8626	-0.0149
63261	LISBON 7	115	63369 JAMESTN3 345 - 66791 CENTER 3 345 ckt 1	0.8906	0.8759	-0.0147
63261	LISBON 7	115	66529 WATERTN3 345 - 67160 GROTON 3 345 ckt 1	0.9101	0.8776	-0.0325
63261	LISBON 7	115	63314 BIGSTON4 230 - 63325 BROWNSV4 230 ckt 1	0.8940	0.8803	-0.0137
63261	LISBON 7	115	545	0.8959	0.8830	-0.0129

Table 4.5 (Cont.): Significantly Affected Bus Low Voltages – Contingency Conditions (Without and with GI-0616 GI-0707A)

NUM	NAM	KV	CONTINGENCY	PRE-PROJECT	POST-PROJECT	CHAN
63261	LISBON 7	115	63325 BROWNSV4 230 - 63327 HANKSON4 230 ckt 1	0.8965	0.8830	-0.0135
63261	LISBON 7	115	110 1	0.9052	0.8888	-0.0164
63261	LISBON 7	115	67326 ELLENDL4 230 - 67396 G132 POI 230 ckt 1	0.9124	0.8999	-0.0125
63261	LISBON 7	115	66445 JAMESTN7 115 - 66454 VALLEYC7 115 ckt 1	0.9108	0.9005	-0.0103
63261	LISBON 7	115	63362 OAKES 4 230 - 67326 ELLENDL4 230 ckt 1	0.9164	0.9028	-0.0136
63261	LISBON 7	115	63362 OAKES 4 230 - 63363 FORMAN 4 230 ckt 1	0.9181	0.9046	-0.0135
63261	LISBON 7	115	110 2	0.9160	0.9051	-0.0109
63262	GWINNER7	115	230	0.8265	0.8090	-0.0175
63262	GWINNER7	115	220	0.8881	0.8678	-0.0203
63262	GWINNER7	115	63358 BUFFALO3 345 - 66792 MAPLE R3 345 ckt 1	0.8923	0.8712	-0.0211
63262	GWINNER7	115	63358 BUFFALO3 345 - 63369 JAMESTN3 345 ckt 1	0.8876	0.8729	-0.0147
63262	GWINNER7	115	63369 JAMESTN3 345 - 66791 CENTER 3 345 ckt 1	0.9005	0.8860	-0.0145
63262	GWINNER7	115	66529 WATERTN3 345 - 67160 GROTON 3 345 ckt 1	0.9197	0.8877	-0.0320
63262	GWINNER7	115	63314 BIGSTON4 230 - 63325 BROWNSV4 230 ckt 1	0.9038	0.8903	-0.0135
63262	GWINNER7	115	545	0.9057	0.8930	-0.0127
63262	GWINNER7	115	63325 BROWNSV4 230 - 63327 HANKSON4 230 ckt 1	0.9063	0.8930	-0.0133
63262	GWINNER7	115	110 1	0.9148	0.8987	-0.0161
63262	GWINNER7	115	67326 ELLENDL4 230 - 67396 G132 POI 230 ckt 1	0.9220	0.9097	-0.0123
63262	GWINNER7	115	66445 JAMESTN7 115 - 66454 VALLEYC7 115 ckt 1	0.9204	0.9102	-0.0102
63262	GWINNER7	115	63362 OAKES 4 230 - 67326 ELLENDL4 230 ckt 1	0.9259	0.9125	-0.0134
63262	GWINNER7	115	63362 OAKES 4 230 - 63363 FORMAN 4 230 ckt 1	0.9276	0.9143	-0.0133
63262	GWINNER7	115	110 2	0.9255	0.9147	-0.0108
63263	FORMN 7	115	230	0.8408	0.8238	-0.0170
63263	FORMN 7	115	220	0.9011	0.8812	-0.0199
63263	FORMN 7	115	63358 BUFFALO3 345 - 66792 MAPLE R3 345 ckt 1	0.9052	0.8846	-0.0206
63263	FORMN 7	115	63358 BUFFALO3 345 - 63369 JAMESTN3 345 ckt 1	0.9006	0.8862	-0.0144
63263	FORMN 7	115	63369 JAMESTN3 345 - 66791 CENTER 3 345 ckt 1	0.9132	0.8991	-0.0141
63263	FORMN 7	115	66529 WATERTN3 345 - 67160 GROTON 3 345 ckt 1	0.9321	0.9007	-0.0314
63263	FORMN 7	115	63314 BIGSTON4 230 - 63325 BROWNSV4 230 ckt 1	0.9165	0.9033	-0.0132
63263	FORMN 7	115	63325 BROWNSV4 230 - 63327 HANKSON4 230 ckt 1	0.9189	0.9059	-0.0130
63263	FORMN 7	115	545	0.9184	0.9059	-0.0125
63263	FORMN 7	115	110 1	0.9273	0.9115	-0.0158
63298	HOVINGJ7	115	230	0.8236	0.8060	-0.0176
63298	HOVINGJ7	115	220	0.8854	0.8651	-0.0203
63298	HOVINGJ7	115	63358 BUFFALO3 345 - 66792 MAPLE R3 345 ckt 1	0.8896	0.8685	-0.0211
63298	HOVINGJ7	115	63358 BUFFALO3 345 - 63369 JAMESTN3 345 ckt 1	0.8849	0.8701	-0.0148
63298	HOVINGJ7	115	63369 JAMESTN3 345 - 66791 CENTER 3 345 ckt 1	0.8978	0.8833	-0.0145
63298	HOVINGJ7	115	66529 WATERTN3 345 - 67160 GROTON 3 345 ckt 1	0.9172	0.8850	-0.0322
63298	HOVINGJ7	115	63314 BIGSTON4 230 - 63325 BROWNSV4 230 ckt 1	0.9012	0.8877	-0.0135
63298	HOVINGJ7	115	545	0.9031	0.8904	-0.0127
63298	HOVINGJ7	115	63325 BROWNSV4 230 - 63327 HANKSON4 230 ckt 1	0.9037	0.8904	-0.0133
63298	HOVINGJ7	115	110 1	0.9123	0.8961	-0.0162
63298	HOVINGJ7	115	67326 ELLENDL4 230 - 67396 G132 POI 230 ckt 1	0.9195	0.9071	-0.0124
63298	HOVINGJ7	115	66445 JAMESTN7 115 - 66454 VALLEYC7 115 ckt 1	0.9179	0.9076	-0.0103
63298	HOVINGJ7	115	63362 OAKES 4 230 - 67326 ELLENDL4 230 ckt 1	0.9233	0.9099	-0.0134
63298	HOVINGJ7	115	63362 OAKES 4 230 - 63363 FORMAN 4 230 ckt 1	0.9251	0.9117	-0.0134
63298	HOVINGJ7	115	110 2	0.9230	0.9122	-0.0108
63358	BUFFALO3	345	60134 SHEYNNE7 115 - 60172 SHYSWCP7 115 ckt 1	0.9056	0.8908	-0.0148
63358	BUFFALO3	345	67160 GROTON 3 345 - 67615 GI-0619 345 ckt 1	0.9198	0.9087	-0.0111
63358	BUFFALO3	345	67326 ELLENDL4 230 - 67396 G132 POI 230 ckt 1	0.9245	0.9142	-0.0103

Table 4.5 (Cont.): Significantly Affected Bus Low Voltages – Contingency Conditions (Without and with GI-0616 GI-0707A)

NUM	NAM	KV	CONTINGENCY	PRE-PROJECT	POST-PROJECT	CHAN
63358	BUFFALO3	345	66529 WATERTN3 345 - 67160 GROTON 3 345 ckt 1	0.9285	0.9146	-0.0139
63358	BUFFALO3	345	250	0.9270	0.9153	-0.0117
63358	BUFFALO3	345	63047 RAMSEY 4 230 - 63056 BALTA 4 230 ckt 1	0.9299	0.9196	-0.0103
63358	BUFFALO3	345	63362 OAKES 4 230 - 63363 FORMAN 4 230 ckt 1	0.9306	0.9199	-0.0107
63362	OAKES 4	230	220	0.9085	0.8878	-0.0207
63362	OAKES 4	230	63358 BUFFALO3 345 - 66792 MAPLE R3 345 ckt 1	0.9127	0.8915	-0.0212
63362	OAKES 4	230	63358 BUFFALO3 345 - 63369 JAMESTN3 345 ckt 1	0.9081	0.8925	-0.0156
63362	OAKES 4	230	63369 JAMESTN3 345 - 66791 CENTER 3 345 ckt 1	0.9251	0.9100	-0.0151
63362	OAKES 4	230	63314 BIGSTON4 230 - 63325 BROWNSV4 230 ckt 1	0.9318	0.9183	-0.0135
63363	FORMAN 4	230	220	0.9111	0.8918	-0.0193
63363	FORMAN 4	230	63358 BUFFALO3 345 - 66792 MAPLE R3 345 ckt 1	0.9152	0.8953	-0.0199
63363	FORMAN 4	230	63358 BUFFALO3 345 - 63369 JAMESTN3 345 ckt 1	0.9107	0.8971	-0.0136
63363	FORMAN 4	230	63369 JAMESTN3 345 - 66791 CENTER 3 345 ckt 1	0.9252	0.9117	-0.0135
63363	FORMAN 4	230	63314 BIGSTON4 230 - 63325 BROWNSV4 230 ckt 1	0.9255	0.9120	-0.0135
63363	FORMAN 4	230	63325 BROWNSV4 230 - 63327 HANKSON4 230 ckt 1	0.9275	0.9143	-0.0132
63363	FORMAN 4	230	545	0.9269	0.9144	-0.0125
63363	FORMAN 4	230	66529 WATERTN3 345 - 67160 GROTON 3 345 ckt 1	0.9469	0.9191	-0.0278
63369	JAMESTN3	345	60134 SHEYNNE7 115 - 60172 SHYSWCP7 115 ckt 1	0.9178	0.9040	-0.0138
63369	JAMESTN3	345	67160 GROTON 3 345 - 67615 GI-0619 345 ckt 1	0.9221	0.9075	-0.0146
63369	JAMESTN3	345	67326 ELLENDL4 230 - 67396 G132 POI 230 ckt 1	0.9256	0.9145	-0.0111
63369	JAMESTN3	345	230	0.9257	0.9149	-0.0108
63369	JAMESTN3	345	66529 WATERTN3 345 - 67160 GROTON 3 345 ckt 1	0.9313	0.9164	-0.0149
63369	JAMESTN3	345	250	0.9288	0.9165	-0.0123
63369	JAMESTN3	345	63362 OAKES 4 230 - 63363 FORMAN 4 230 ckt 1	0.9312	0.9194	-0.0118
66438	FORMAN 7	115	230	0.8410	0.8239	-0.0171
66438	FORMAN 7	115	220	0.9015	0.8812	-0.0203
66438	FORMAN 7	115	63358 BUFFALO3 345 - 66792 MAPLE R3 345 ckt 1	0.9025	0.8846	-0.0179
66438	FORMAN 7	115	63358 BUFFALO3 345 - 63369 JAMESTN3 345 ckt 1	0.9038	0.8862	-0.0176
66438	FORMAN 7	115	63369 JAMESTN3 345 - 66791 CENTER 3 345 ckt 1	0.9132	0.8990	-0.0142
66444	JAMESTN4	230	220	0.9160	0.8949	-0.0211
66444	JAMESTN4	230	63358 BUFFALO3 345 - 66792 MAPLE R3 345 ckt 1	0.9170	0.8982	-0.0188
66445	JAMESTN7	115	220	0.9152	0.8941	-0.0211
66445	JAMESTN7	115	63358 BUFFALO3 345 - 66792 MAPLE R3 345 ckt 1	0.9155	0.8971	-0.0184
66445	JAMESTN7	115	63358 BUFFALO3 345 - 63369 JAMESTN3 345 ckt 1	0.9171	0.8989	-0.0182
66454	VALLEYC7	115	66445 JAMESTN7 115 - 66454 VALLEYC7 115 ckt 1	0.8677	0.8541	-0.0136
66454	VALLEYC7	115	220	0.8882	0.8654	-0.0228
66454	VALLEYC7	115	230	0.8843	0.8666	-0.0177
66454	VALLEYC7	115	63358 BUFFALO3 345 - 66792 MAPLE R3 345 ckt 1	0.8937	0.8690	-0.0247
66454	VALLEYC7	115	63358 BUFFALO3 345 - 63369 JAMESTN3 345 ckt 1	0.8874	0.8708	-0.0166
66454	VALLEYC7	115	63369 JAMESTN3 345 - 66791 CENTER 3 345 ckt 1	0.8975	0.8816	-0.0159
66454	VALLEYC7	115	66529 WATERTN3 345 - 67160 GROTON 3 345 ckt 1	0.9291	0.8976	-0.0315
66478	GREGORY7	115	66475 BONESTL7 115 - 66478 GREGORY7 115 ckt 1	0.9048	0.8896	-0.0152
66494	WINNER 7	115	66475 BONESTL7 115 - 66478 GREGORY7 115 ckt 1	0.9141	0.8992	-0.0149
66710	NARY 7	115	63245 WILTON 7 115 - 63246 BEMIDJI7 115 ckt 1	0.8241	0.8095	-0.0146
66710	NARY 7	115	565	0.8266	0.8120	-0.0146
66715	LEECHLK7	115	63245 WILTON 7 115 - 63246 BEMIDJI7 115 ckt 1	0.8402	0.8266	-0.0136
66715	LEECHLK7	115	565	0.8424	0.8290	-0.0134
66716	LAPORTE7	115	63245 WILTON 7 115 - 63246 BEMIDJI7 115 ckt 1	0.8406	0.8270	-0.0136
66716	LAPORTE7	115	565	0.8428	0.8294	-0.0134
66792	MAPLE R3	345	60134 SHEYNNE7 115 - 60172 SHYSWCP7 115 ckt 1	0.9033	0.8891	-0.0142

Table 4.5 (Cont.): Significantly Affected Bus Low Voltages – Contingency Conditions (Without and with GI-0616 GI-0707A)

NUM	NAM	KV	CONTINGENCY	PRE-PROJECT	POST-PROJECT	CHAN
66828	KYPMPS28	115	230	0.8465	0.8282	-0.0183
66828	KYPMPS28	115	220	0.8737	0.8511	-0.0226
66828	KYPMPS28	115	63358 BUFFALO3 345 - 66792 MAPLE R3 345 ckt 1	0.8789	0.8547	-0.0242
66828	KYPMPS28	115	66445 JAMESTN7 115 - 66454 VALLEYC7 115 ckt 1	0.8693	0.8564	-0.0129
66828	KYPMPS28	115	63358 BUFFALO3 345 - 63369 JAMESTN3 345 ckt 1	0.8730	0.8566	-0.0164
66828	KYPMPS28	115	63369 JAMESTN3 345 - 66791 CENTER 3 345 ckt 1	0.8845	0.8687	-0.0158
66828	KYPMPS28	115	66529 WATERTN3 345 - 67160 GROTON 3 345 ckt 1	0.9123	0.8795	-0.0328
66828	KYPMPS28	115	63314 BIGSTON4 230 - 63325 BROWNSV4 230 ckt 1	0.9044	0.8916	-0.0128
66828	KYPMPS28	115	110 1	0.9083	0.8917	-0.0166
66828	KYPMPS28	115	545	0.9061	0.8940	-0.0121
66828	KYPMPS28	115	63325 BROWNSV4 230 - 63327 HANKSON4 230 ckt 1	0.9066	0.8940	-0.0126
66828	KYPMPS28	115	67326 ELLENDL4 230 - 67396 G132 POI 230 ckt 1	0.9094	0.8945	-0.0149
66828	KYPMPS28	115	63362 OAKES 4 230 - 67326 ELLENDL4 230 ckt 1	0.9132	0.8970	-0.0162
66828	KYPMPS28	115	63362 OAKES 4 230 - 63363 FORMAN 4 230 ckt 1	0.9143	0.8982	-0.0161
66829	KYPMPS19	115	230	0.8184	0.8002	-0.0182
66829	KYPMPS19	115	220	0.8821	0.8611	-0.0210
66829	KYPMPS19	115	63358 BUFFALO3 345 - 66792 MAPLE R3 345 ckt 1	0.8863	0.8646	-0.0217
66829	KYPMPS19	115	63358 BUFFALO3 345 - 63369 JAMESTN3 345 ckt 1	0.8816	0.8663	-0.0153
66829	KYPMPS19	115	63369 JAMESTN3 345 - 66791 CENTER 3 345 ckt 1	0.8948	0.8799	-0.0149
66829	KYPMPS19	115	66529 WATERTN3 345 - 67160 GROTON 3 345 ckt 1	0.9146	0.8815	-0.0331
66829	KYPMPS19	115	63314 BIGSTON4 230 - 63325 BROWNSV4 230 ckt 1	0.8983	0.8844	-0.0139
66829	KYPMPS19	115	63325 BROWNSV4 230 - 63327 HANKSON4 230 ckt 1	0.9008	0.8872	-0.0136
66829	KYPMPS19	115	545	0.9002	0.8872	-0.0130
66829	KYPMPS19	115	110 1	0.9096	0.8930	-0.0166
66938	PS18TAP7	115	230	0.8579	0.8400	-0.0179
66938	PS18TAP7	115	220	0.8846	0.8624	-0.0222
66938	PS18TAP7	115	63358 BUFFALO3 345 - 66792 MAPLE R3 345 ckt 1	0.8896	0.8660	-0.0236
66938	PS18TAP7	115	66445 JAMESTN7 115 - 66454 VALLEYC7 115 ckt 1	0.8802	0.8676	-0.0126
66938	PS18TAP7	115	63358 BUFFALO3 345 - 63369 JAMESTN3 345 ckt 1	0.8839	0.8678	-0.0161
66938	PS18TAP7	115	63369 JAMESTN3 345 - 66791 CENTER 3 345 ckt 1	0.8952	0.8796	-0.0156
66938	PS18TAP7	115	66529 WATERTN3 345 - 67160 GROTON 3 345 ckt 1	0.9224	0.8903	-0.0321

Table 4.6: Significantly Affected Bus High Voltages – System Intact Conditions (Without and with GI-0616 GI-0707A, Without GI-0619)

NUM	NAM	KV	PRE-PROJECT	POST-PROJECT	CHAN
60134	SHEYNNE7	115	1.0708	1.0812	0.0104
63203	MAPLTN 7	115	1.0705	1.0809	0.0104
63204	FARGO TP	115	1.0709	1.0813	0.0104
66761	MODEROW7	115	1.0695	1.0797	0.0102

Table 4.7: Significantly Affected Facilities - N-1 Contingency Conditions
(Without and with GI-0616 GI-0707A, Without GI-0619)

MONITORED ELEMENT	RATEA	RATEC	CONTINGENCY	PRE-PROJECT		POST-PROJECT		CHANGE		TDF
				%	MVA	%	MVA	%	MVA	
60126 SPLT RK3 345 60130 SPLTRTA3 345 1	717.0	789.0	110 1	91.0	657.9	102.9	740.5	11.9	82.6	22.3%
	717.0	789.0	110 2	88.8	641.9	100.4	723.3	11.6	81.4	22.0%
60130 SPLTRTA3 345 66537 WHITE 3 345 1	720.0	792.0	110 1	90.8	666.7	102.4	740.5	11.6	73.8	19.9%
	720.0	792.0	110 2	88.5	650.2	100.0	723.3	11.5	73.1	19.8%
60133 SHEYNNE4 230 66435 FARGO 4 230 1	391.0	391.0	63369 JAMESTN3 345 - 66791 CENTER 3 345 ckt 1	103.7	404.2	109.7	427.6	6.0	23.4	6.3%
	391.0	391.0	63358 BUFFALO3 345 - 63369 JAMESTN3 345 ckt 1	102.6	394.4	109.4	420.0	6.8	25.6	6.9%
	391.0	391.0	220	101.8	389.9	108.0	416.0	6.2	26.1	7.1%
	391.0	391.0	63358 BUFFALO3 345 - 66792 MAPLE R3 345 ckt 1	101.5	389.6	107.4	408.6	5.9	19.0	5.1%
63190 MAPLER2Y 345 66754 MAPLE R4 230 1	336.0	336.0	MAPLER1Y	135.0	453.7	141.3	474.6	6.3	20.9	5.6%
63190 MAPLER2Y 345 66792 MAPLE R3 345 1	336.0	336.0	MAPLER1Y	135.0	453.7	141.3	474.6	6.3	20.9	5.6%
63195 BIGSTONY 230 63214 BIGSTON7 115 1	233.0	233.0	110 2	130.7	304.6	136.4	317.8	5.7	13.2	3.6%
63195 BIGSTONY 230 63314 BIGSTON4 230 1	233.0	233.0	110 2	130.7	304.6	136.3	317.7	5.6	13.1	3.5%
63245 WILTON 7 115 63246 BEMIDJI7 115 1	120.0	132.0	GI-0616-GRT	--	--	109.9	133.0	--	--	--
63327 HANKSON4 230 63329 WAHPETN4 230 1	320.0	352.0	63358 BUFFALO3 345 - 63369 JAMESTN3 345 ckt 1	118.3	360.2	123.0	371.4	4.7	11.2	3.0%
	320.0	352.0	220	117.9	358.1	122.3	369.7	4.4	11.6	3.1%
	320.0	352.0	110 2	112.3	348.5	117.5	361.5	5.2	13.0	3.5%
	320.0	352.0	60126 SPLT RK3 345 - 60130 SPLTRTA3 345 ckt 1	100.3	314.5	105.4	327.0	5.1	12.5	3.4%
	320.0	352.0	60130 SPLTRTA3 345 - 66537 WHITE 3 345 ckt 1	100.3	314.5	105.4	327.0	5.1	12.5	3.4%
63362 OAKES 4 230 67326 ELLENDL4 230 1	240.0	264.0	110 1	110.9	257.4	117.1	269.7	6.2	12.3	3.3%
	240.0	264.0	66529 WATERTN3 345 - 67160 GROTON 3 345 ckt 1	104.7	245.8	113.8	263.6	9.1	17.8	4.8%
	240.0	264.0	66529 WATERTN3 345 - 66236 WATERT1T 345 ckt 1	99.4	235.6	105.4	247.3	6.0	11.7	3.2%
	240.0	264.0	WATERT1T	99.4	235.6	105.4	247.3	6.0	11.7	3.2%
	240.0	264.0	GI-0616-GRT	--	--	104.6	241.5	--	--	--
	240.0	264.0	66512 GROTON 7 115 - 66533 BRISTOL7 115 ckt 1	98.3	233.0	104.2	245.1	5.9	12.1	3.3%
	240.0	264.0	67105 LELANDO3 345 - 66506 FTTHOMP3 345 ckt 1	98.4	232.0	104.2	243.2	5.8	11.2	3.0%
	240.0	264.0	66530 WATERTN4 230 - 66550 GRANITF4 230 ckt 1	97.7	231.0	103.3	242.1	5.6	11.1	3.0%
	240.0	264.0	130 2	97.5	230.7	103.2	241.8	5.7	11.1	3.0%
	240.0	264.0	130 1	97.0	229.8	102.7	241.0	5.7	11.2	3.0%
	240.0	264.0	260	96.9	229.6	102.6	240.8	5.7	11.2	3.0%
	240.0	264.0	66512 GROTON 7 115 - 66534 ORDWAY 7 115 ckt 1	96.6	229.4	102.2	240.7	5.6	11.3	3.1%
66236 WATERT1T 345 66529 WATERTN3 345 1	400.0	400.0	60126 SPLT RK3 345 - 60130 SPLTRTA3 345 ckt 1	130.5	522.1	149.9	599.5	19.4	77.4	20.9%
	400.0	400.0	60130 SPLTRTA3 345 - 66537 WHITE 3 345 ckt 1	130.5	522.1	149.9	599.5	19.4	77.4	20.9%
66236 WATERT1T 345 66530 WATERTN4 230 1	400.0	400.0	60126 SPLT RK3 345 - 60130 SPLTRTA3 345 ckt 1	131.3	525.2	151.0	603.9	19.7	78.7	21.3%
	400.0	400.0	60130 SPLTRTA3 345 - 66537 WHITE 3 345 ckt 1	131.3	525.2	151.0	603.9	19.7	78.7	21.3%
66426 BISMARK4 230 67296 WARD 4 230 1	320.0	352.0	105 1	108.3	345.5	114.8	364.4	6.5	18.9	5.1%

%: Percentage of continuous facility rating (Rate A).

Table 4.7 (Cont.): Significantly Affected Facilities - N-1 Contingency Conditions
(Without and with GI-0616 GI-0707A, Without GI-0619)

MONITORED ELEMENT	RATEA	RATEC	CONTINGENCY	PRE-PROJECT		POST-PROJECT		CHANGE		TDF
				%	MVA	%	MVA	%	MVA	
66512 GROTON 7 115 66533 BRISTOL7 115 1	120.0	122.0	66529 WATERTN3 345 - 67160 GROTON 3 345 ckt 1	83.2	101.9	108.1	132.4	24.9	30.5	8.2%
66512 GROTON 7 115 66535 REDFELD7 115 1	80.0	88.0	66529 WATERTN3 345 - 67160 GROTON 3 345 ckt 1	74.2	59.4	109.1	89.0	34.9	29.6	8.0%
66512 GROTON 7 115 67402 ABDNSBT7 115 1	120.0	132.0	66529 WATERTN3 345 - 67160 GROTON 3 345 ckt 1	89.9	110.0	116.6	142.8	26.7	32.8	8.9%
	120.0	132.0	67326 ELLENDL4 230 - 67396 G132 POI 230 ckt 1	91.5	109.1	102.4	121.7	10.9	12.6	3.4%
66515 HURON 7 115 66535 REDFELD7 115 1	80.0	88.0	66529 WATERTN3 345 - 67160 GROTON 3 345 ckt 1	68.6	54.9	103.2	81.7	34.6	26.8	7.2%
66791 CENTER 3 345 66756 SQBUTTE4 230 1	336.0	352.0	66791 CENTER 3 345 - 67316 COYOTE 3 345 ckt 1	116.6	391.7	122.4	411.2	5.8	19.5	5.3%
	336.0	352.0	SINGLE-046	108.0	362.9	113.6	381.8	5.6	18.9	5.1%
67201 LELND1TY 345 67105 LELANDO3 345 1	250.0	300.0	67105 LELANDO3 345 - 67202 LELND2TY 345 ckt 1	90.2	225.6	123.6	309.1	33.4	83.5	22.6%
	250.0	300.0	67202 LELND2TY 345 - 67106 LELANDO4 230 ckt 1	90.2	225.6	123.6	309.1	33.4	83.5	22.6%
	250.0	300.0	LELND2TY	90.2	225.6	123.6	309.1	33.4	83.5	22.6%
67201 LELND1TY 345 67106 LELANDO4 230 1	250.0	300.0	67105 LELANDO3 345 - 67202 LELND2TY 345 ckt 1	90.2	225.6	123.6	309.1	33.4	83.5	22.6%
	250.0	300.0	67202 LELND2TY 345 - 67106 LELANDO4 230 ckt 1	90.2	225.6	123.6	309.1	33.4	83.5	22.6%
	250.0	300.0	LELND2TY	90.2	225.6	123.6	309.1	33.4	83.5	22.6%
67296 WARD 4 230 67342 HESKETT4 230 1	320.0	352.0	105 1	111.0	354.2	117.6	373.1	6.6	18.9	5.1%

%: Percentage of continuous facility rating (Rate A).

Table 4.8: Significantly Affected Bus Low Voltages – Contingency Conditions (Without and with GI-0616 GI-0707A, Without GI-0619)

NUM	NAM	KV	CONTINGENCY	Base Case	With GI-0616 & GI-0707	CHAN
63260	ENDERLN7	115	63358 BUFFALO3 345 - 66792 MAPLE R3 345 ckt 1	0.8883	0.8720	-0.0163
63260	ENDERLN7	115	63358 BUFFALO3 345 - 63369 JAMESTN3 345 ckt 1	0.8885	0.8744	-0.0141
63260	ENDERLN7	115	220	0.8864	0.8760	-0.0104
63260	ENDERLN7	115	63369 JAMESTN3 345 - 66791 CENTER 3 345 ckt 1	0.9003	0.8882	-0.0121
63260	ENDERLN7	115	66529 WATERTN3 345 - 67160 GROTON 3 345 ckt 1	0.9247	0.9080	-0.0167
63260	ENDERLN7	115	110 2	0.9251	0.9141	-0.0110
63260	ENDERLN7	115	250	0.9301	0.9172	-0.0129
63260	ENDERLN7	115	60126 SPLT RK3 345 - 60130 SPLTRTA3 345 ckt 1	0.9330	0.9190	-0.0140
63260	ENDERLN7	115	60130 SPLTRTA3 345 - 66537 WHITE 3 345 ckt 1	0.9330	0.9190	-0.0140
63260	ENDERLN7	115	108 1	0.9331	0.9191	-0.0140
63261	LISBON 7	115	63358 BUFFALO3 345 - 66792 MAPLE R3 345 ckt 1	0.8942	0.8780	-0.0162
63261	LISBON 7	115	63358 BUFFALO3 345 - 63369 JAMESTN3 345 ckt 1	0.8944	0.8803	-0.0141
63261	LISBON 7	115	220	0.8922	0.8820	-0.0102
63261	LISBON 7	115	63369 JAMESTN3 345 - 66791 CENTER 3 345 ckt 1	0.9061	0.8940	-0.0121
63261	LISBON 7	115	66529 WATERTN3 345 - 67160 GROTON 3 345 ckt 1	0.9302	0.9137	-0.0165
63261	LISBON 7	115	110 2	0.9306	0.9198	-0.0108
63262	GWINNER7	115	63358 BUFFALO3 345 - 66792 MAPLE R3 345 ckt 1	0.9040	0.8880	-0.0160
63262	GWINNER7	115	63358 BUFFALO3 345 - 63369 JAMESTN3 345 ckt 1	0.9042	0.8904	-0.0138
63262	GWINNER7	115	220	0.9021	0.8920	-0.0101
63262	GWINNER7	115	63369 JAMESTN3 345 - 66791 CENTER 3 345 ckt 1	0.9157	0.9039	-0.0118
63263	FORMN 7	115	63358 BUFFALO3 345 - 66792 MAPLE R3 345 ckt 1	0.9167	0.9010	-0.0157
63263	FORMN 7	115	63358 BUFFALO3 345 - 63369 JAMESTN3 345 ckt 1	0.9169	0.9033	-0.0136
63263	FORMN 7	115	63369 JAMESTN3 345 - 66791 CENTER 3 345 ckt 1	0.9282	0.9166	-0.0116
63298	HOVINGJ7	115	63358 BUFFALO3 345 - 66792 MAPLE R3 345 ckt 1	0.9014	0.8854	-0.0160
63298	HOVINGJ7	115	63358 BUFFALO3 345 - 63369 JAMESTN3 345 ckt 1	0.9016	0.8877	-0.0139
63298	HOVINGJ7	115	220	0.8995	0.8893	-0.0102
63298	HOVINGJ7	115	63369 JAMESTN3 345 - 66791 CENTER 3 345 ckt 1	0.9132	0.9013	-0.0119
63362	OAKES 4	230	63358 BUFFALO3 345 - 66792 MAPLE R3 345 ckt 1	0.9242	0.9079	-0.0163
63362	OAKES 4	230	63358 BUFFALO3 345 - 63369 JAMESTN3 345 ckt 1	0.9239	0.9096	-0.0143
63362	OAKES 4	230	220	0.9221	0.9110	-0.0111
63363	FORMAN 4	230	63358 BUFFALO3 345 - 66792 MAPLE R3 345 ckt 1	0.9263	0.9111	-0.0152
63363	FORMAN 4	230	63358 BUFFALO3 345 - 63369 JAMESTN3 345 ckt 1	0.9265	0.9135	-0.0130
66454	VALLEYC7	115	63358 BUFFALO3 345 - 66792 MAPLE R3 345 ckt 1	0.9042	0.8871	-0.0171
66454	VALLEYC7	115	63358 BUFFALO3 345 - 63369 JAMESTN3 345 ckt 1	0.9055	0.8901	-0.0154
66828	KYPMPS28	115	63358 BUFFALO3 345 - 66792 MAPLE R3 345 ckt 1	0.8902	0.8730	-0.0172
66828	KYPMPS28	115	63358 BUFFALO3 345 - 63369 JAMESTN3 345 ckt 1	0.8911	0.8759	-0.0152
66828	KYPMPS28	115	220	0.8881	0.8779	-0.0102
66828	KYPMPS28	115	63369 JAMESTN3 345 - 66791 CENTER 3 345 ckt 1	0.8998	0.8882	-0.0116
66829	KYPMPS19	115	63358 BUFFALO3 345 - 66792 MAPLE R3 345 ckt 1	0.8985	0.8820	-0.0165
66829	KYPMPS19	115	63358 BUFFALO3 345 - 63369 JAMESTN3 345 ckt 1	0.8986	0.8844	-0.0142
66829	KYPMPS19	115	220	0.8965	0.8861	-0.0104
66829	KYPMPS19	115	63369 JAMESTN3 345 - 66791 CENTER 3 345 ckt 1	0.9105	0.8983	-0.0122
66938	PS18TAP7	115	63358 BUFFALO3 345 - 66792 MAPLE R3 345 ckt 1	0.9008	0.8839	-0.0169
66938	PS18TAP7	115	63358 BUFFALO3 345 - 63369 JAMESTN3 345 ckt 1	0.9017	0.8867	-0.0150
66938	PS18TAP7	115	220	0.8987	0.8887	-0.0100
66938	PS18TAP7	115	63369 JAMESTN3 345 - 66791 CENTER 3 345 ckt 1	0.9102	0.8988	-0.0114

5. CONSTRAINED INTERFACE ANALYSIS

Experience with operating the MAPP system indicates there are a number of stability and steady-state limitations that frequently constrain the operation of the system. For convenience purposes, these limitations have been expressed in terms of PTDF (flows are measured under system intact conditions) and OTDF (flows are measured after a specified contingencies) flowgates. Operation of the system is limited so that power flows through these flowgates does not exceed their respective prescribed limits.

The intent of this analysis is to calculate the impact of the proposed GI-0616 & GI-0707A Wind Farm on the MAPP flowgates. All PTDF and OTDF flowgates monitored by MAPP were investigated. The emphasis, however, was not on the actual value of flows through those flowgates, but instead on the impact (distribution factor) the proposed GI-0616 & GI-0707A Wind Farms would have on those flowgates. Thus the results are less dependent on the assumptions used in developing the base cases, and more a consequence of the network topology between the proposed plant and the assumed sink.

The analysis was performed using the following cases (See Section 4 for details):

1. Pre-project case a02-sp11aa.sav (a02): 2011 summer peak case with GI-0619, without the proposed GI-0616 & GI-0707A wind farms.

2. Post-project case a04-sp11aa.sav (a04): 2011 summer peak case with GI-0619, and with the proposed GI-0616 & GI-0707A wind farms.

The DFCALC IPLAN program included in the NMORWG Study Package was used for this analysis.

Table 5.1 shows the adversely impacted[**] interfaces in the pre- and post-project cases. The tables show the interface flows (in MW) and transfer distribution factor (in percent) for the 368 MW power transfer from the proposed projects to the sink. As new interfaces are regularly added to the MAPP process, this listing may not include any recently added flowgates.

[**] As per MAPP Design Review Subcommittee criteria (See MAPP DRS document entitled "*Steady-State Facility & Constrained Path Impact Determination Requirements & Screening Guidelines for Study Submissions*", June 2007 version), the minimum PTDF threshold for MAPP PTDF interfaces is 5% and the minimum MW impact threshold is 1 MW. PTDF interfaces that have PTDFs >= 5% -and- a MW impact >= minimum MW impact threshold are considered significantly impacted.
For OTDF interfaces, the minimum OTDF threshold is 3% and the minimum impact threshold is 1 MW. OTDF interfaces that have OTDFs >= 3% -and- a MW impact >= minimum MW impact threshold are considered significantly impacted.

It can be seen that the proposed projects adversely impact the NDEX interface with PTDF = 82.5%. This is a consequence of dispatching the proposed wind farms across the NDEX interface.

The DFCALC outputs are included in Appendix F.1.

The analysis was repeated for the sensitivity cases without GI-0619 (See Section 4.5):

1. Pre-project case a12-sp11aa.sav (a12): 2011 summer peak case without GI-0619, and without the proposed GI-0616 & GI-0707A wind farms.

2. Post-project case a14-sp11aa.sav (a14): 2011 summer peak case without GI-0619, and with the proposed GI-0616 & GI-0707A wind farms.

Results are shown in Table 5.2. Results are similar to those shown in Table 5.1 .

Table 5.1: Constrained Interface Analysis Results - With GI-0619 (Without and With GI-0616 GI-0707A)

INTERFACE	WIHTOUT GI-0616 & GI-0707A	WIHT GI-0616 & GI-0707A	CHANGE	TDF
	(MW)	(MW)	(MW)	(%)
PTDF INTERFACES				
NDEX	1298.2	1601.9	303.8	82.5
COOPER_S	392.6	451.4	58.8	16.0
MWEX	842.5	895.6	53.1	14.4
PR_ISL_BYRON	180.6	217.0	36.4	9.9
FORCHS_PTDF	901.5	936.7	35.2	9.6
FTCAL_S	262.2	296.1	33.8	9.2
EAUARP__PTDF	363.0	395.4	32.4	8.8
PLPZION_PTDF	614.6	643.6	29.0	7.9
GRIS_LNC	395.4	421.2	25.8	7.0
OTDF INTERFACES				
QUACDVQUA471	1015.3	1077.0	61.7	16.8
QUA471CDVNEL	734.7	778.7	44.0	12.0
CDVNELQUA471	730.8	774.6	43.8	11.9
SJOHTHIATSTC	468.2	510.5	42.3	11.5
IATSTRLRDNUA	530.7	571.4	40.7	11.1
PLPZIOZIOARC	605.4	645.5	40.1	10.9
EAUARPPRIBYR	381.3	417.4	36.1	9.8
NELELCCHESIL	845.5	879.6	34.1	9.3
PLPZIOCHESIL	732.6	764.6	32.0	8.7
EAUARPWMPPAD	396.1	427.9	31.8	8.6
ADNZIOPLPZIO	285.8	315.2	29.4	8.0
CHESILNELELC	1000.0	1028.2	28.1	7.6
LACNEOLANWIC	312.2	329.2	17.0	4.6
BYRCHEBYRCHE	1373.4	1386.5	13.1	3.6
BYNCHEBYNCHE	1312.9	1325.3	12.4	3.4
SONCOCCOCCCT	178.5	191.1	12.6	3.4

Table 5.2: Constrained Interface Analysis Results - Without GI-0619 (Without and With GI-0616 GI-0707A)

INTERFACE	WIHTOUT GI-0616 & GI-0707A	WIHT GI-0616 & GI-0707A	CHANGE	TDF
	(MW)	(MW)	(MW)	(%)
PTDF INTERFACES				
NDEX	1029.5	1341.5	312.0	84.8
COOPER_S	339.1	401.1	62.0	16.9
MWEX	797.9	851.6	53.6	14.6
PR_ISL_BYRON	150.6	187.0	36.4	9.9
FTCAL_S	231.7	266.6	34.9	9.5
EAUARP__PTDF	335.3	368.2	33.0	9.0
FORCHS_PTDF	877.9	909.4	31.5	8.6
PLPZION_PTDF	589.7	619.4	29.8	8.1
GRIS_LNC	373.9	401.4	27.4	7.5
OTDF INTERFACES				
QUACDVQUA471	960.8	1024.9	64.1	17.4
CDVNELQUA471	692.1	737.6	45.5	12.4
QUA471CDVNEL	695.8	741.6	45.8	12.4
SJOHTHIATSTC	429.6	474.3	44.7	12.1
IATSTRLRDNUA	493.5	536.6	43.0	11.7
PLPZIOZIOARC	570.9	612.1	41.1	11.2
EAUARPPRIBYR	350.5	387.1	36.6	9.9
NELELCCHESIL	815.6	851.0	35.4	9.6
PLPZIOCHESIL	705.0	737.9	32.9	8.9
EAUARPWMPPAD	369.0	401.3	32.3	8.8
ADNZIOPLPZIO	260.5	290.7	30.1	8.2
CHESILNELELC	975.4	1004.5	29.2	7.9
LACNEOLANWIC	296.6	314.7	18.1	4.9
BYRCHEBYRCHE	1361.9	1375.5	13.6	3.7
BYNCHEBYNCHE	1301.9	1314.8	12.9	3.5

6. STABILITY ANALYSIS

6.1 Model Development

Analyses were performed using models set up to simulate year 2011 conditions. The pre-project model for this analysis was developed starting from the models in the NMORWG 2008 Study package. This package utilizes PTI PSS/E™ Rev 29.4 and Version 6.6B of the Digital FORTRAN Compiler.

The starting point for the development of the pre-project model (i.e., without the proposed GI-0616 and GI-0707A Wind Farm) was case *urg-so08aa.sav* included in the NMORWG 2008 Study package. This is a 2008 summer off-peak base case with Northern MAPP load (i.e., North Dakota, Manitoba Hydro and NSP load) at 70% to 80% of the corresponding summer peak load.

In order to develop the pre-project case, several changes were made to this case with input from the study ad hoc group. Some of the more significant changes included the following:

- Open Southdale Loop
- Increase GI-0209 Ft. Thompson wind from 7.5 MW to 40 MW
- SW MN Wind is modeled at 1200 MW together with associated BRIGO facilities
- Groton/Watertown caps for increase in NDEX to 2080 MW
- Set power of Square Butte DC line to 500 MW
- Change G132 Model from GE to Acciona

Due to the uncertainty of the precise in service date and the slight positive impact of these facilities on stability, Western ND load growth and associated facilities were not included in the stability model.

Also, several prior-queued generation projects were added based on input from WAPA. See Table 6.1. These projects fall into three categories:

- Projects that are already in service (shown in green)
- Projects that have already been studied with an in-service date of 2011 or before (shown in yellow)
- Projects that are currently under study and are likely to be in service by 2011 (shown in white)

Export levels in the pre-project case were set to the following levels using the *setexports* program included in the NMORWG Study Package. MHEX was set to approx. 2175 MW. MWEX was loaded to approx. 1525 MW and NDEX was set to 2080 MW.

The pre-project case is named *b02-so11aa.sav*. A case summary is given in Appendix_D.1.

After establishing the pre-project case, the proposed GI-0616 and GI-0707A Wind Farms were added in order to create the post-project stability case (*b04-so11aa.sav*).

It is important to note that in both cases, NDEX levels are on the order of 2080 MW. In other words, the output of the GI-0616 and GI-0707A Wind Farms were assumed consumed within NDEX boundaries. This was accomplished by decreasing Big Stone Generation by 285 MW and increasing North Dakota Zone 90 loads by 83 MW. Zone 90 loads increased from 76.7% of 2011 Summer Peak load levels in the pre-project case to 78.6% in the post-project case.

The case titles for the pre- and post-project cases are presented below. Please refer to Appendices D.1 and D.2 for more detailed case summaries.

Pre-project stability case (i.e., without GI-0616 and GI-0707A):

```
B02-SO11AA.SAV;SUMMER;OP LD;SYSTEM INTACT           :
ND=2080,MH=2171,MW=1528,OHMH=-196,OHMP=150,EWTW=190,BD=165
```

Post-project stability case (i.e., with GI-0616 at 80.5 MW and GI-0707A at 287.5 MW):

```
B04-SO11AA.SAV;SUMMER;OP LD;SYSTEM INTACT           :
ND=2079,MH=2174,MW=1525,OHMH=-196,OHMP=150,EWTW=189,BD=166
```

Corresponding North Dakota one-line diagrams without and with the GI-0616 and GI-0707A Wind Farms are depicted in Figure 6.1 and 6.2 respectively. Note from Figure 6.2 that there is a marginal overload on the 345 kV segment between the point of interconnection of the GI-0619 wind farm and the Groton substation (approx. 4% overload based on the Rate A rating of 717 MVA). This overload is probably a result of terminal equipment limitations (actual conductor rating is 1198 MVA) and may be mitigated by terminal equipment replacements and/or adjustment.

6.2 Baseline Performance (i.e., Without the GI-0616 and GI-0707A Wind Farm)

This section summarizes the results from simulations conducted to test Northern MAPP dynamic performance under baseline conditions (i.e., prior-to commissioning of the proposed GI-0616 and GI-0707A Wind Farms). The analyses was conducted on case *b02-so11aa.sav (b02)* described in the previous section.

The regional disturbance scenarios listed in Table 6.2 were examined on the *b02* Case. The results from the studies are summarized in Appendix_E.1. The following transient voltage violations are reported in that Appendix:

- Contingency *ef3*: 65% voltages at Jamestown 345 kV
- Contingency *fd1*: 68% voltages at Jamestown 345 kV
- Contingency *fd4*: 67% voltages at Jamestown 345 kV

- Contingency *yas*: 129% voltages at Arrowhead 345 kV

Note: Appendix E.1 shows violations following fault fd3 (5 cycle 3-phase fault on Square Butte-Stanton 230 kV line). This fault is no longer valid because of breaker replacements at Square Butte 230 on the Stanton line by a prior-queued project (Oliver County 2). With the breaker replacements, the fault clearing time reduces to 4 cycles. Fault fds models the 4 cycle clearing and was tested in lieu of fault fd3.

As mentioned in [3], the violations following *fd1* and *fd4* are not a concern because their *fdk* and *fdl* counterparts with tripping of Young 2 exhibit no violations.

The violation for *ef3* is also a criteria violation. Fault *ef3* is a 5 cycle 3-phase fault on Stanton – Coal Creek - McHenry 230 kV line. The *ef3* violations are a known issue. One possible solution that has been studied by area transmission owners is to reduce the *ef3* fault clearing time from 5 cycles to 4 cycles by replacing the existing breakers at Stanton 230 on the Coal Creek line with faster two-cycle breakers. Fault *ef3* was tested with the 4 cycle fault clearing time and no criteria violations were found (see fault *ef9*). From Appendix E.1, the minimum transient voltage at Jamestown 345 kV following fault ef9 is 0.71 pu (0.01 pu above the transient voltage criteria of 0.70 pu).

Fault *yas* (SLG fault at Arrowhead 230 kV) resulted in high voltage violation at Arrowhead 345 kV bus. As suggested by Minnesota Power in a previous study, this violation is not an issue as the fault would, in reality, also disconnect the Arrowhead 345 kV bus.

6.3 Performance with GI-0616 and GI-0707A Wind Farms

Regional and local contingencies listed in Table 6.2 were tested on post-project case *b04-so11aa.sav* (Case *b04*). This case showed criteria violations for several faults. Fault *ef3* rendered the system unstable while other faults resulted in transient voltage violations at Jamestown 345 kV, Wahpeton 115 kV, and at the GI-0616, GI-0707A, and GI-0619 POI on the Leland Olds – Groton 345 kV line. Simulation summary tables are given in Appendix_E.2. The following transient voltage violations are observed:

- Contingency *ac3*: 66% voltage at GI-0619 POI 345 kV
- Contingency *ag1*: 65% voltage at GI-0619 POI 345 kV
- Contingency *ag3*: 68% voltage at GI-0619 POI 345 kV
- Contingency *bl3*: 66% voltage at GI-0619 POI 345 kV
- Contingency *ec3*: 68% voltage at GI-0619 POI 345 kV
- Contingency *ef3*: unstable
- Contingency *ef9*: 65% voltages at Jamestown 345 kV
- Contingency *ei2*: 63% voltages at Groton 345 kV
- Contingency *evs*: 64% voltages at Groton 345 kV

- Contingency *fd1*: 65% voltages at Jamestown 345 kV
- Contingency *fd4*: 64% voltages at Jamestown 345 kV
- Contingency *fds*: 69% voltages at Jamestown 345 kV
- Contingency *nmz*: 69% voltages at Groton 345 kV
- Contingency *yas*: 124% voltages at Arrowhead 345 kV
- Contingency *ha3*: 60% voltages at Groton 345 kV
- Contingency *hb3*: 64% voltages at GI-0616 & GI-0707A POI 345 kV
- Contingency *he3*: 65% voltages at Broadland 345 kV

No criteria violations were observed following local faults.

The above results show that as prior queued projects go in service additional system reinforcements will be needed to mitigate the criteria violations associated with the proposed GI-0616 and GI-0707A Wind Farms on system stability performance.

6.4 Sensitivity Analysis Without GI-0619 (300 MW)

At the request of WAPA, a sensitivity analysis was performed by excluding the 300 MW GI-0619 Wind Farm. A pre-project sensitivity case (*b12-so11aa.sav* Case *b12*) was developed (i.e., prior-to commissioning of the proposed GI-0616 and GI-0707A Wind Farms). Figure 6.3 shows a one-line diagram. A case summary is given in Appendix D.3.

The disturbance scenarios listed in Table 6.2 were examined on the *b12* Case. The simulation results are summarized in Appendix E.3. The following transient voltage violations are observed:

- Contingency *ef3*: 67% voltages at Jamestown 345 kV (contingency ef9 with 4 cycle clearing at Stanton 230 was OK)
- Contingency fd*4*: 69% voltages at Jamestown 345 kV
- Contingency *yas*: 125% voltages at Arrowhead 345 kV

Based on the pre-project sensitivity case, the proposed GI-0616 and GI-0707A Wind Farms were added in order to create the post-project sensitivity stability case (*b14-so11aa.sav* Case *b14*). Figure 6.4 shows a one-line diagram. A case summary is given in Appendix D.4. The post-project sensitivity cases showed criteria violations for several faults. Fault ef3 caused the system to become unstable while other faults resulted in transient voltage violations at Jamestown 345 kV, Wahpeton 115 kV, and at the GI-0616, GI-0707A, and GI-0619 POI on the Leland Olds – Groton 345 kV line. Simulation summary tables are given in Appendix E.4. The following transient voltage violations are observed:

- Contingency *ac3*: 68% voltage at GI-0616 and GI-0707A POI 345 kV
- Contingency *ag1*: 68% voltage at GI-0619 and GI-0707A POI 345 kV

- Contingency *bl3*: 68% voltage at Jamestown 345 kV
- Contingency *ec3*: 69% voltage at Jamestown 345 kV
- Contingency *ef3*: unstable
- Contingency *ef9*: 68% voltages at Jamestown 345 kV
- Contingency *fd1*: 66% voltages at Jamestown 345 kV
- Contingency *fd4*: 66% voltages at Jamestown 345 kV
- Contingency *yas*: 125% voltages at Arrowhead 345 kV (not a concern)

In order to mitigate the above criteria violations, the following reinforcements are considered:

- To support base case voltages and mitigate transient voltages at proposed Wind Farms 345 kV POI:
  - Add 2*60 MVAr switched shunt at the GI-0616 and GI-0707A 345 kV POI

- To reduce the loop flows on the Center – Jamestown 345 kV line to such an extent that the transient voltage violations at Jamestown 345 kV are mitigated:
  - Add 15% Series Compensation on the Leland Olds – Ft. Thompson 345 kV line

Contingencies that resulted in criteria violations in post-project sensitivity case *b14-so11aa.sav* were tested on case *b16-so11aa.sav* (Case *b16* is the same as case b14 with the above system reinforcements). Figure 6.5 shows a one-line diagram for Case *b16*. A case summary is given in Appendix D.5. The simulation results are summarized in Appendix E.5. The following transient voltage violations are observed:

- Contingency *ef3*: 65% voltages at Jamestown 345 kV (fault ef9 is OK)
- Contingency *fd1*: 68% voltages at Jamestown 345 kV (fault fdk is OK)
- Contingency fd*4*: 67% voltages at Jamestown 345 kV (fault fdl is OK)
- Contingency *yas*: 125% voltages at Arrowhead 345 kV (not a concern)

The above results show that with the addition of system reinforcements, the criteria violations associated with the proposed GI-0616 and GI-0707A Wind Farms on system stability performance can be mitigated.

6.5 Sensitivity Analysis Without Prior-Queued Projects G531 and G607

The analysis performed in Sections 6.2 through 6.4 showed that contingency ef3 is the most limiting fault from a stability perspective. The ef3 violations are attributable to prior-queued projects G531 (68 MW coal unit at Stanton 230) and G607 (25 MW uprate of the existing Coyote unit). Analyses performed on the pre-project case with these two units turned off did not show any ef3 violations. The transient voltages at Jamestown 345 kV bus are: 0.70 pu (with GI-0619) and 0.71 pu (without GI-0619).

The intent of this sensitivity analysis is to check the impact of the proposed wind farms on system performance following fault ef3 under the assumption that projects G531 and G607 do not proceed with their interconnection requests or that the facility reinforcements are not available due to the associated projects not being in service prior to project GI-0616/0707A.

For the purposes of this analysis, the switched shunts at the GI-0616 and GI-0707A 345 kV POI and the GI-0619 POI are assumed to be the same as before (2*60 MVAr at each location).

The following observations are made:

- Adding the proposed GI-0616 and GI-0707A projects resulted system unstable following fault ef3 for the case with GI-0619. For the case without GI-0619, adding the proposed projects resulted in transient voltage violations at Jamestown 345 kV bus as 0.67 pu following fault ef3.

- Series compensating the Leland Olds-Ft. Thompson 345 kV line mitigates the post-project ef3 violations. The series compensation amounts are 20% (without GI-0619).

Figure 6.6 shows a one-line diagram for the post-project case *b65* (without GI-0619) and with 20% series compensation on the Leland Olds-Ft. Thompson 345 kV line. A case summary is given in Appendix D.6. Simulation results are summarized in Appendix E.6.

Although series compensation is effective from a stability perspective, additional studies are needed to fully assess the impact of series compensation on transmission system performance. These studies should cover the impact of series compensation on transmission system fault current levels, potential for sub-synchronous resonance (SSR) and steady-state performance. These additional studies are considered out of scope of the present system impact study.

6.6 Sensitivity Analysis to Determine Third-party Mitigation in lieu of Series Compensation to Address the Transient Voltage Violations at Jamestown

In lieu of series compensation and breaker replacements at Stanton 230 for fault ef3, third-party reinforcements may be considered to mitigate the pre- and post-project criteria violations in the Jamestown area. One such possibility is to add reactive support at Jamestown 345.

The intent of this sensitivity analysis is to determine the reactive support requirements at Jamestown.

The analysis was run with projects G531 and G607 included. However, project GI-0619 was excluded. A limited number of local and regional faults were run. The following third-party solutions were determined:

Pre-project Case *b32-so11aa.sav*:

- 120 MVAr Switched Shunt at Jamestown 345 kV

Post-project Case *b34-so11aa.sav*:

- 120 MVAr Switched Shunt at Jamestown 345 kV
- 120 MVAr SVC at Jamestown 345 kV
- 60 MVAr Switched Shunt at GI-0616 & GI-0707A 345 kV POI

Figure 6.7 and Figure 6.8 show one-line diagrams for Case *b32* and *b34*. Case summaries are given in Appendix D.7 and Appendix D.8. Simulation results are summarized in Appendix E.7 and Appendix E.8.

The simulation results show that with a 120 MVAr SVC and a 120 MVAr switched shunt at Jamestown 345 kV, the post-project criteria violations can be mitigated. The switched shunt requirements at the GI-0616 & GI-0707A 345 kV can be reduced from 120 MVAr to 60 MVAr.

6.7 Sensitivity Analysis with NDEX=2447 MW

The intent of this sensitivity analysis is to determine whether it is possible for the proposed wind farms to deliver power outside North Dakota across the NDEX boundaries. This would increase the power transfer across the NDEX from 2080 MW to 2447 MW (i.e., 2080 + 81 + 286 = 2447 MW).

The analysis was performed without GI-0619. Sensitivity case b44-so11aa.sav was developed from case b34-so11aa.sav (see Section 6.6) by increasing NDEX from 2080 MW to 2447 MW. The increase in NDEX was modeled by first restoring Big Stone to its full output (See Section 6.1) and then running the *setexports* program to achieve the 2447 NDEX level[1].

A limited number of local and regional faults were run. Preliminary results showed transient voltage violations in the Groton area. These were mitigated by increasing the size of the switched shunt at the GI-0616 and GI-0707A 345 kV POI as well as turning on the Groton synchronous condenser. Simulation results also showed transient voltage violation at Wahpeton 115 kV (0.79 pu). This was mitigated by adding a 10 MVAr switched shunt at Wahpeton 115 kV.

[1] Note: As an aside, it was seen that the power flow on the Leland Olds-Groton 345 kV line is sensitive to the output of the Big Stone generating unit. Reducing the MW output of the Big Stone unit results in higher flows on the Leland Olds –Groton 345 kV line. This in turn stresses the Groton area transmission. Under this condition, more system reinforcements may be needed to mitigate the post-project criteria violations.

In summary, the following solutions were found to mitigate the post-project violations with NDEX at 2447 MW:

Post-project Case *b44-so11aa.sav*:

- 120 MVAr Switched Shunt at Jamestown 345 kV
- 120 MVAr SVC at Jamestown 345 kV
- 120 MVAr Switched Shunt at GI-0616 & GI-0707A 345 kV POI
- Turn on Groton synchronous condenser
- 10 MVAr Switched Shunt at Wahpeton 115 kV

Figure 6.9 shows one-line diagrams for Case *b44*. Case summaries are given in Appendix D.9. Simulation results are summarized in Appendix E.9.

6.8 Sensitivity Analysis with 345/230 kV Jamestown Transformer

In lieu of series compensation and breaker replacements at Stanton 230 for fault ef3, connecting Jamestown 345 kV and 230 kV buses through a 345/230 kV transformer was considered to mitigate the pre- and post-project criteria violations in the Jamestown area.

The intent of this sensitivity analysis is to determine whether this 345/230 kV transformer will be enough to mitigate the criteria violations in the Jamestown area following fault ef3.

The analysis was performed without GI-0619 and with or without G531 & G607 projects. Figure 6.10 and Figure 6.11 show one-line diagrams for Case *c14* (without GI-0619, with G531 & G607) and Case *c64* (without GI-0619, without G531 & G607). Case summaries are given in Appendix D.10 and Appendix D.11. Simulation results are summarized in Appendix E.10 and Appendix E.11.

For the purposes of this analysis, the switched shunt at the GI-0616 and GI-0707A 345 kV POI is assumed to be the same as before (2*60 MVAr).

The simulation results for Case *c14* and *c64* did not show any ef3 violations. The transient voltages at Jamestown 345 kV bus are 0.70 pu and 0.74 pu for Case *c14* and *c64*, respectively.

The contingency on the 345 kV line from Jamestown to Buffalo was tested in power flow analysis. Under this contingency, the 345/230 kV Jamestown transformer will be overloaded up to 390 MVA following stability related 125 MW generation reduction.

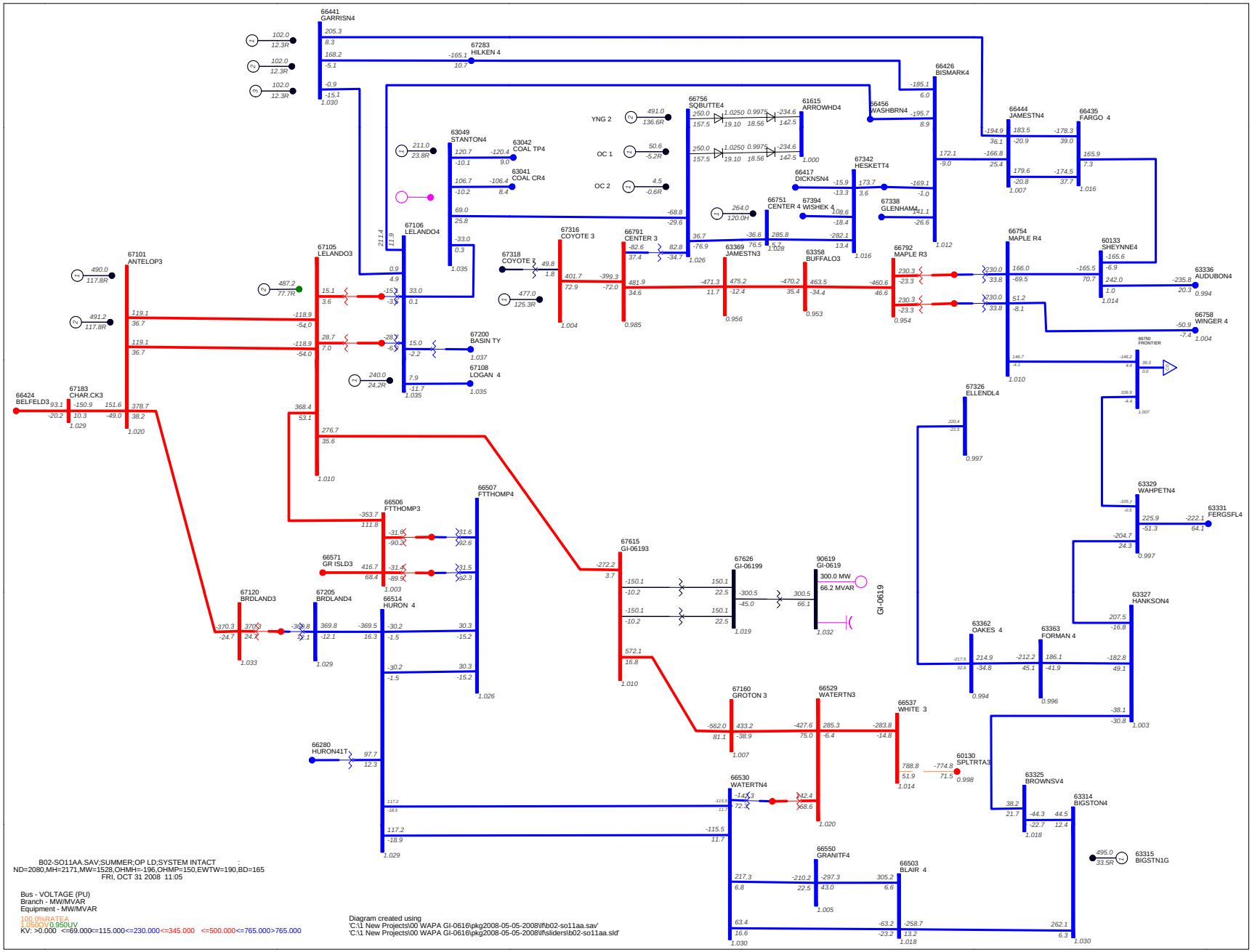

Figure 6.1: North Dakota - Without GI-0616 and GI-0707A - 2080 NDEX (Case b02)

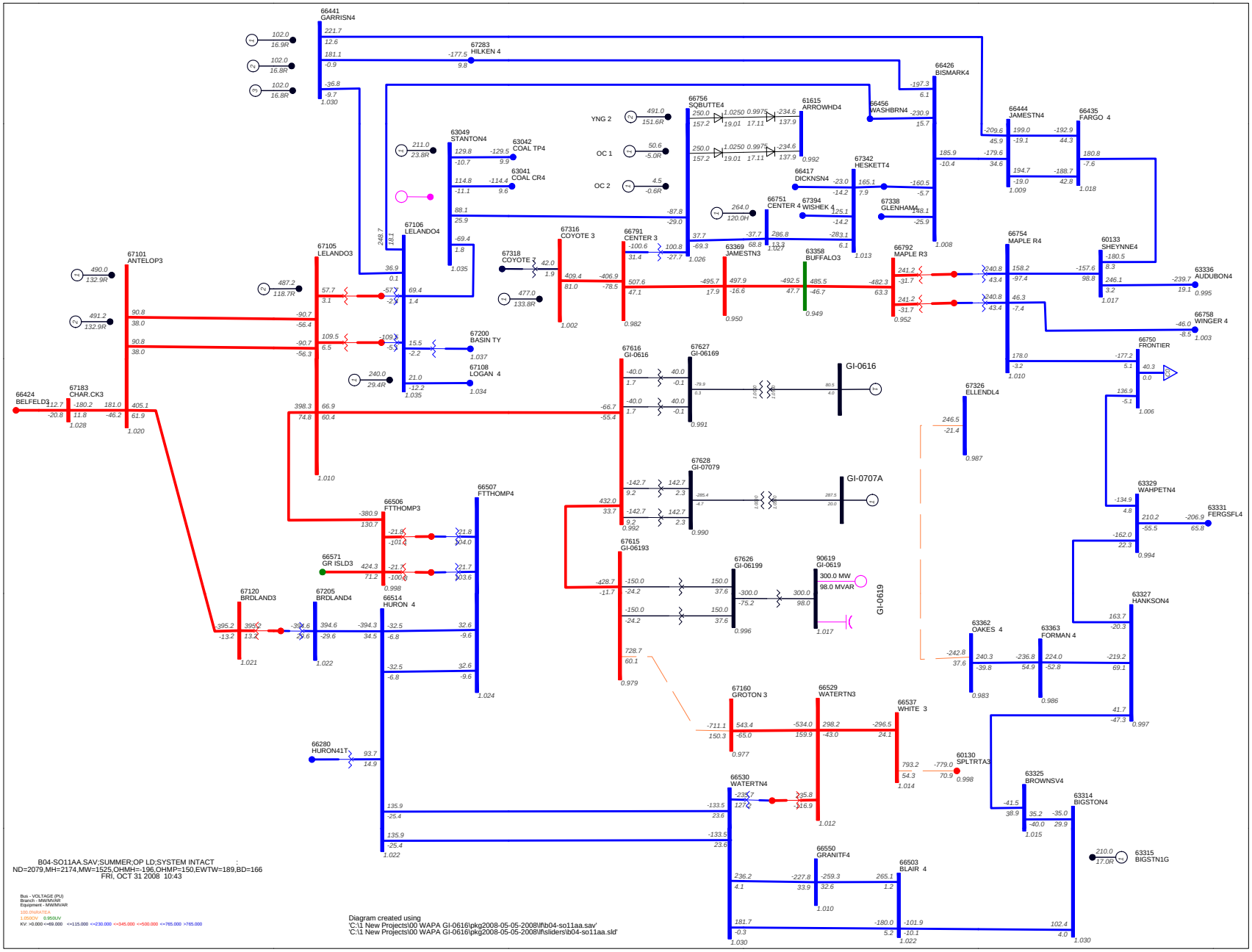

Figure 6.2: North Dakota - With GI-0616 (80.5 MW) and GI-0707A (287.5 MW) - 2080 NDEX (Case b04)

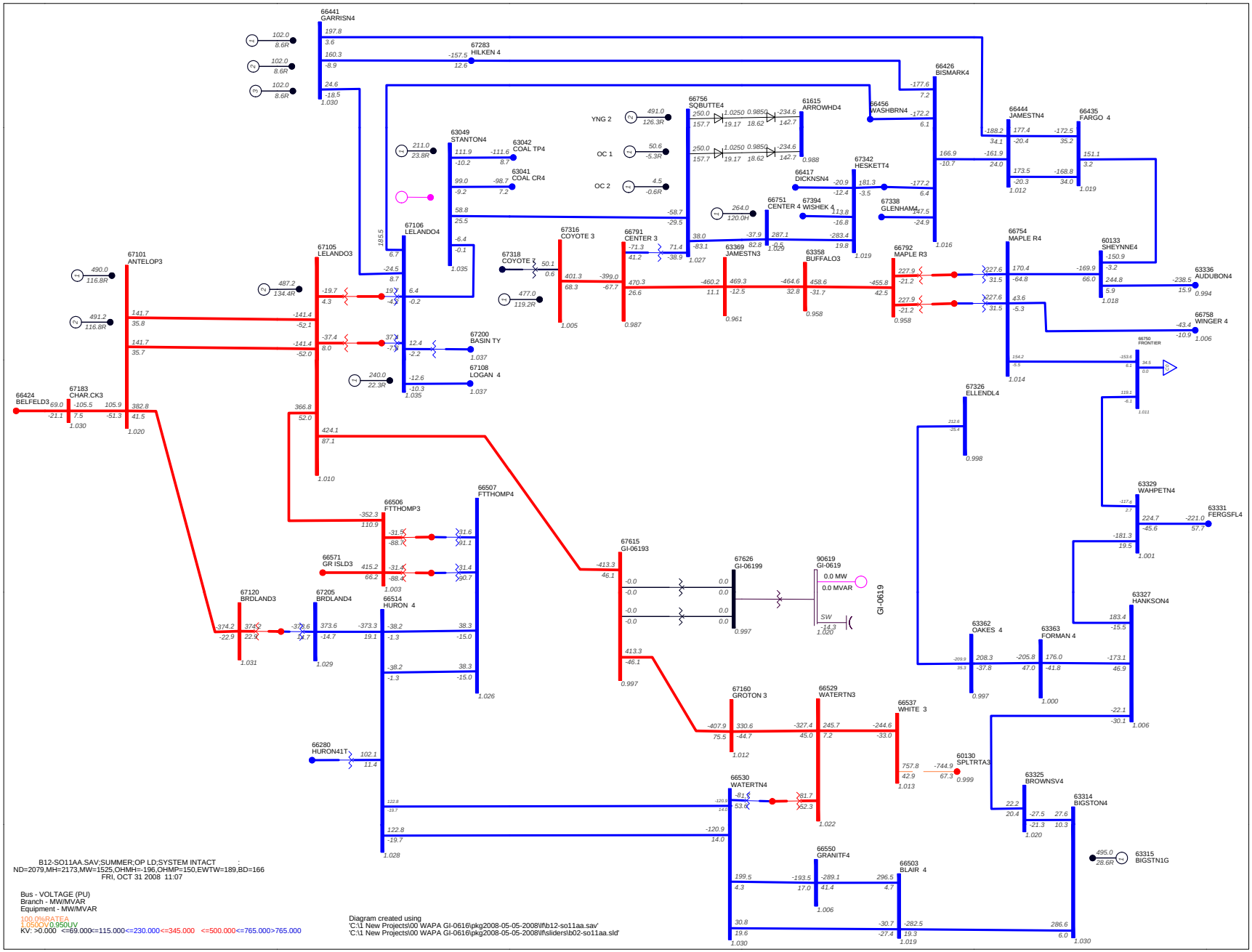

Figure 6.3: North Dakota - Without GI-0616 and GI-0707A - 2080 NDEX - Without GI-0619 (Case b14)

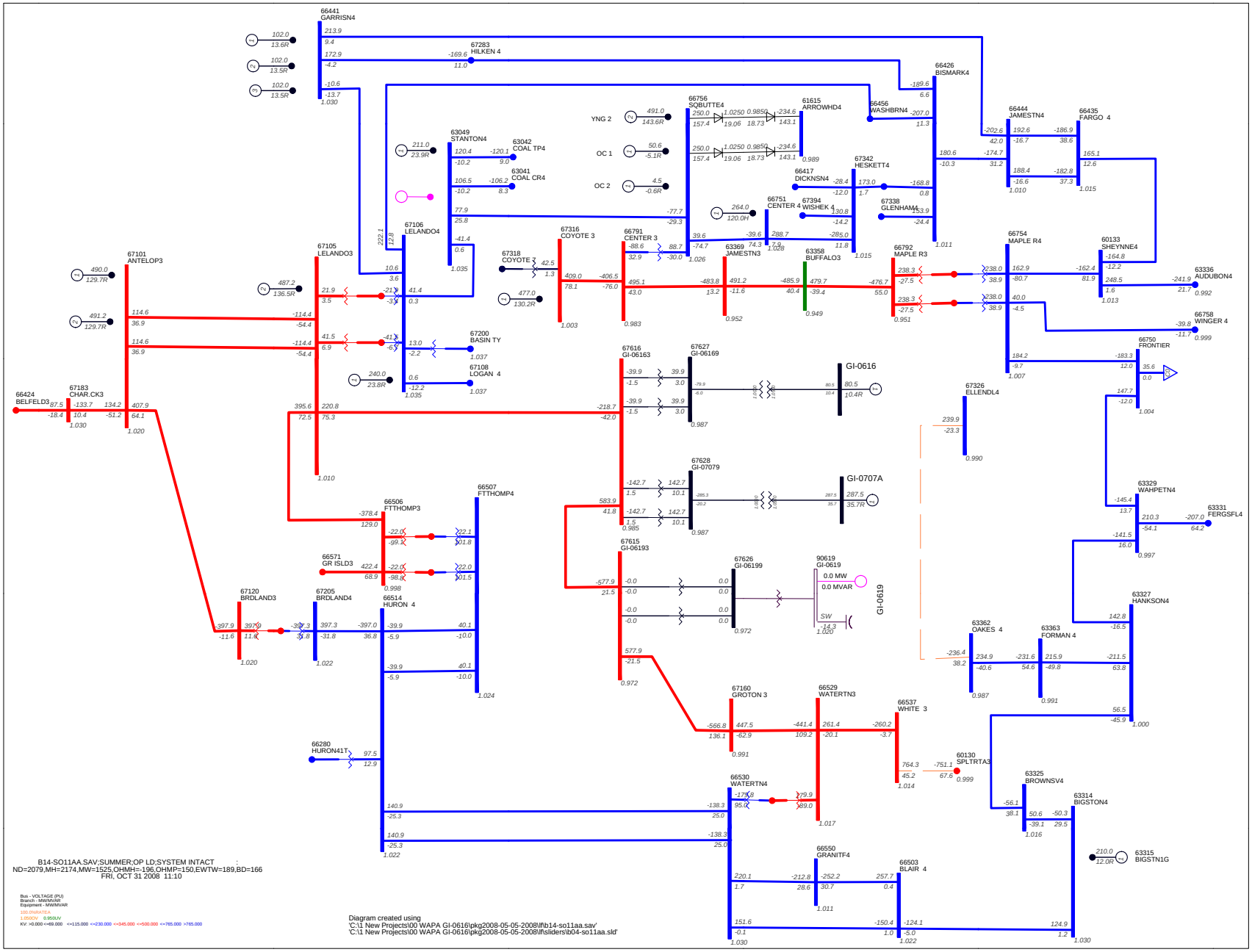

Figure 6.4: North Dakota - With GI-0616 (80.5 MW) and GI-0707A (287.5 MW) - 2080 NDEX - Without GI-0619 (Case b14)

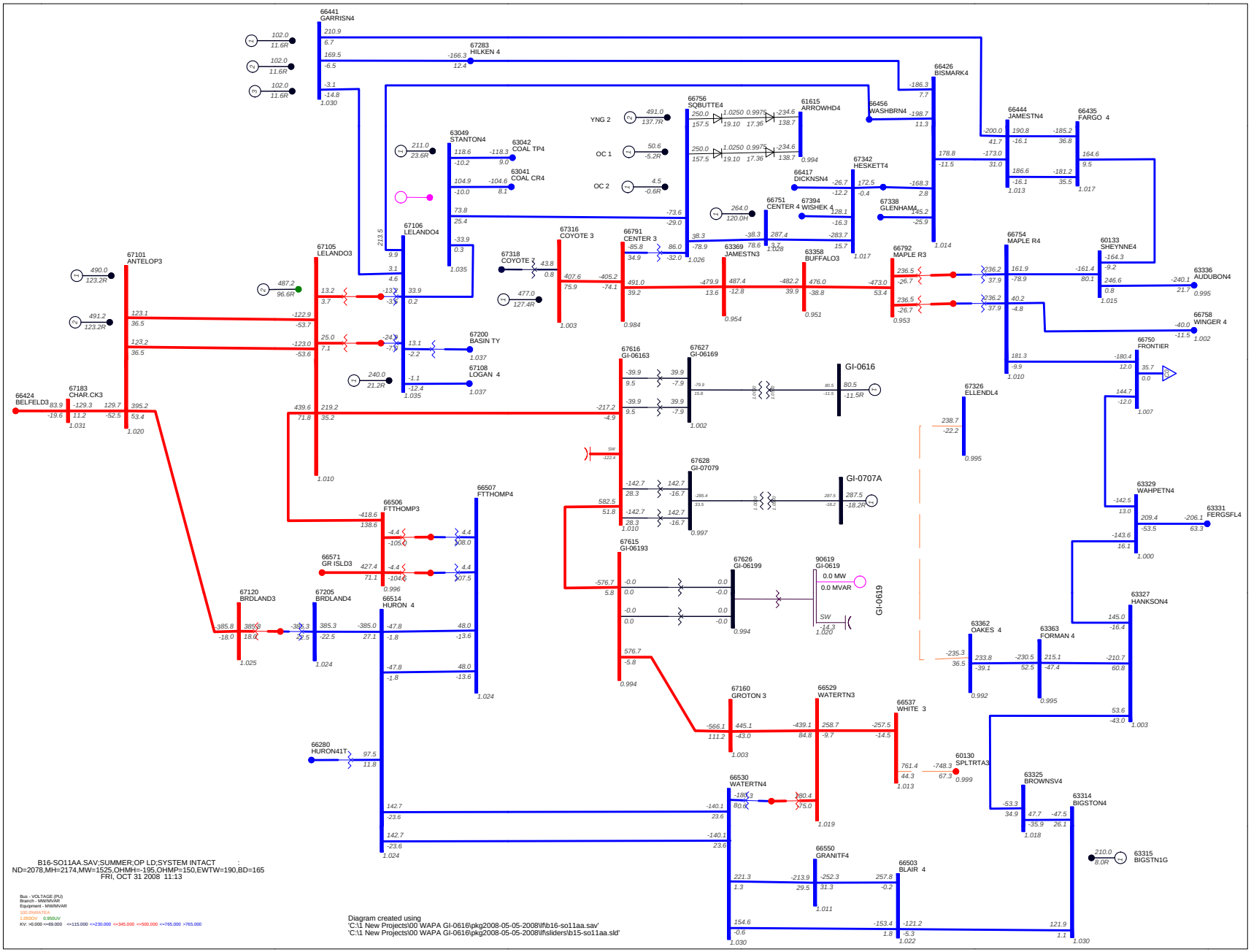

Figure 6.5: North Dakota - With GI-0616 (80.5 MW) and GI-0707A (287.5 MW) - 2080 NDEX - Without GI-0619 - With System Reinforcement (Case 216)

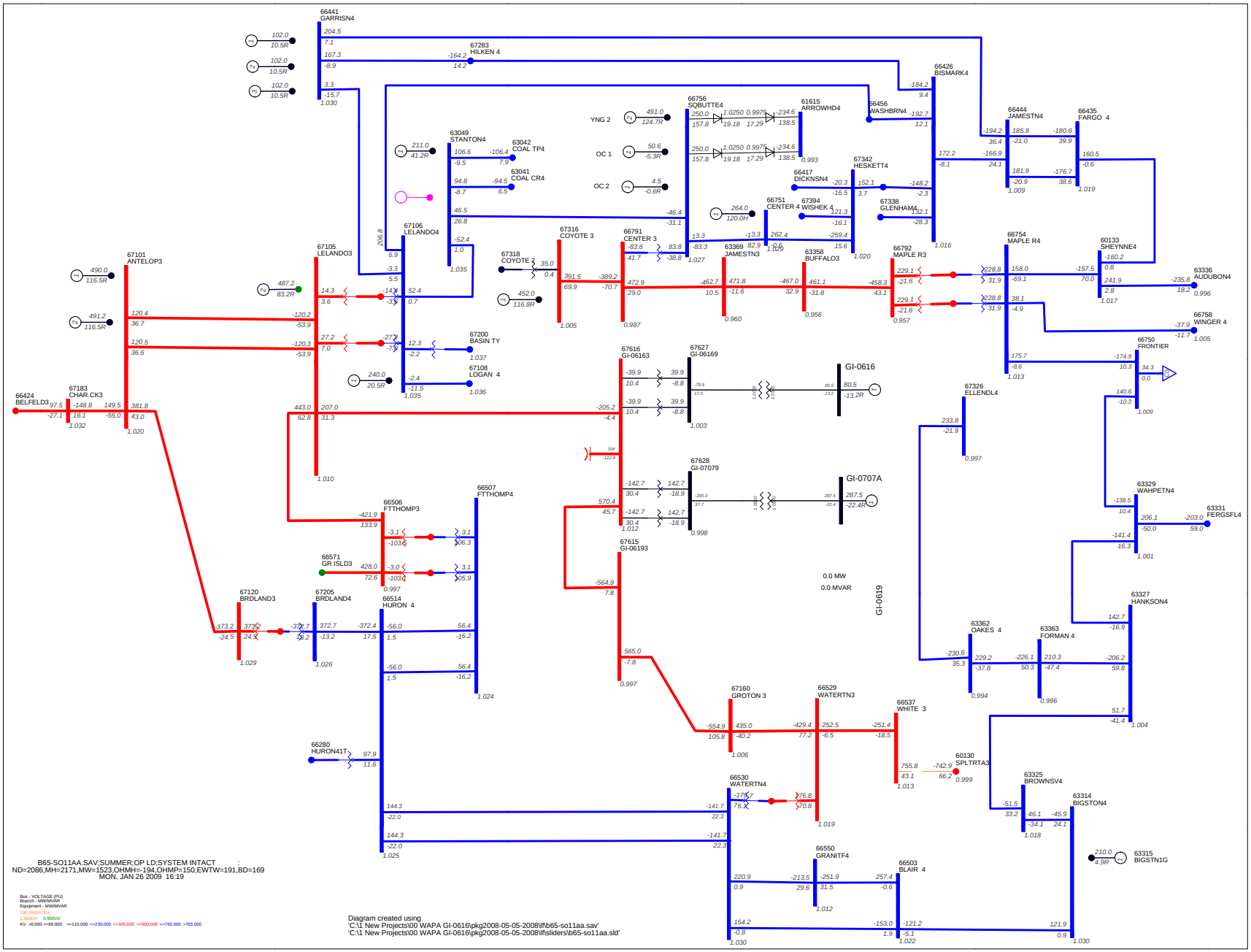

Figure 6.6: North Dakota - With GI-0616 (80.5 MW) and GI-0707A (287.5 MW) - 2080 NDEX - Without GI-0619, With System Reinforcement (Case 65)

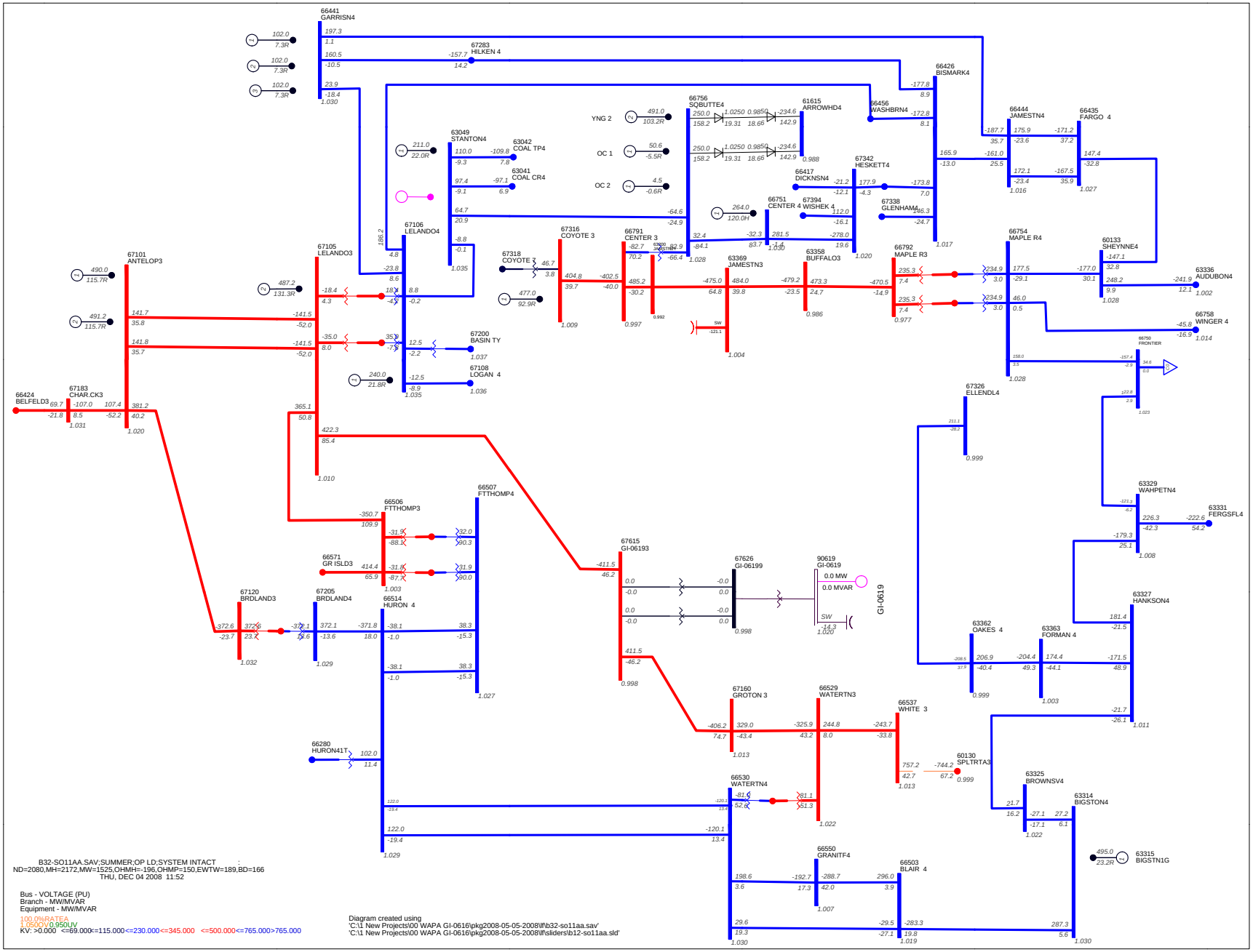

Figure 6.7: North Dakota - 2080 NDEX - Without GI-0619 - With System Reinforcement (Case b32)

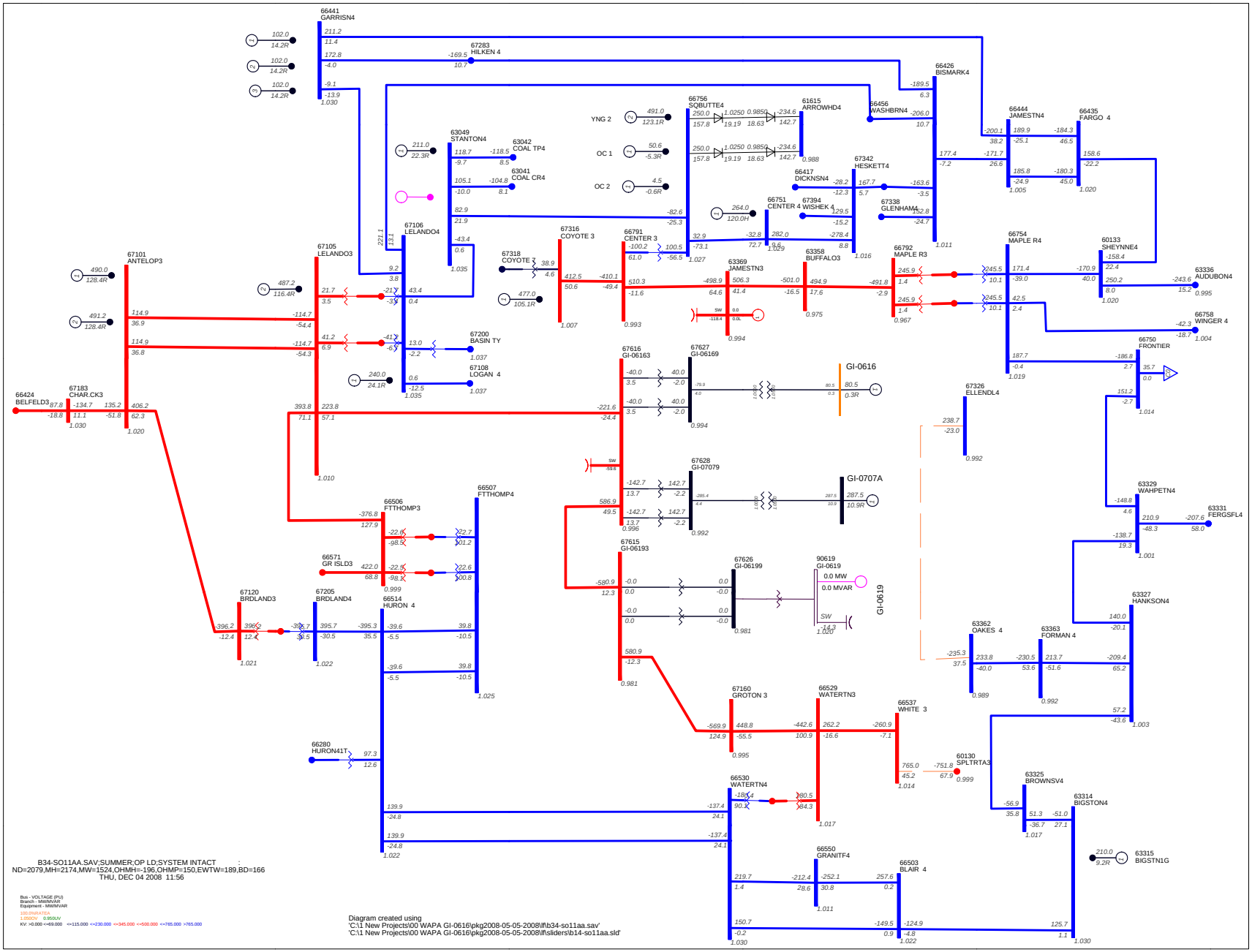

Figure 6.8: North Dakota - With GI-0616 (80.5 MW) and GI-0707A (287.5 MW) - 2080 NDEX - Without GI-0619 - With System Reinforcement (Case 534)

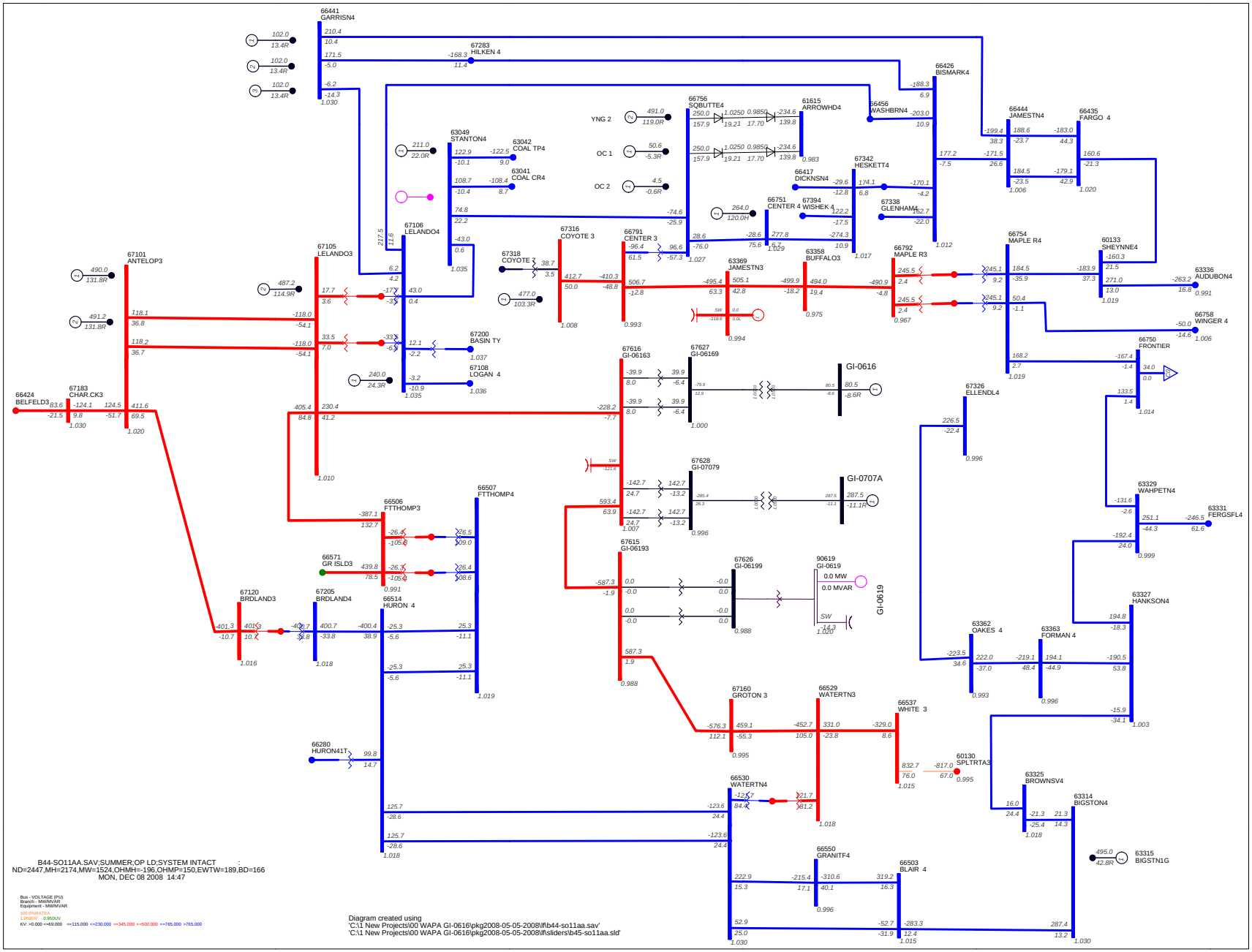

Figure 6.9: North Dakota - With GI-0616 (80.5 MW) and GI-0707A (287.5 MW) - 2447 NDEX - Without GI-0619 - With System Reinforcement (Case 44)

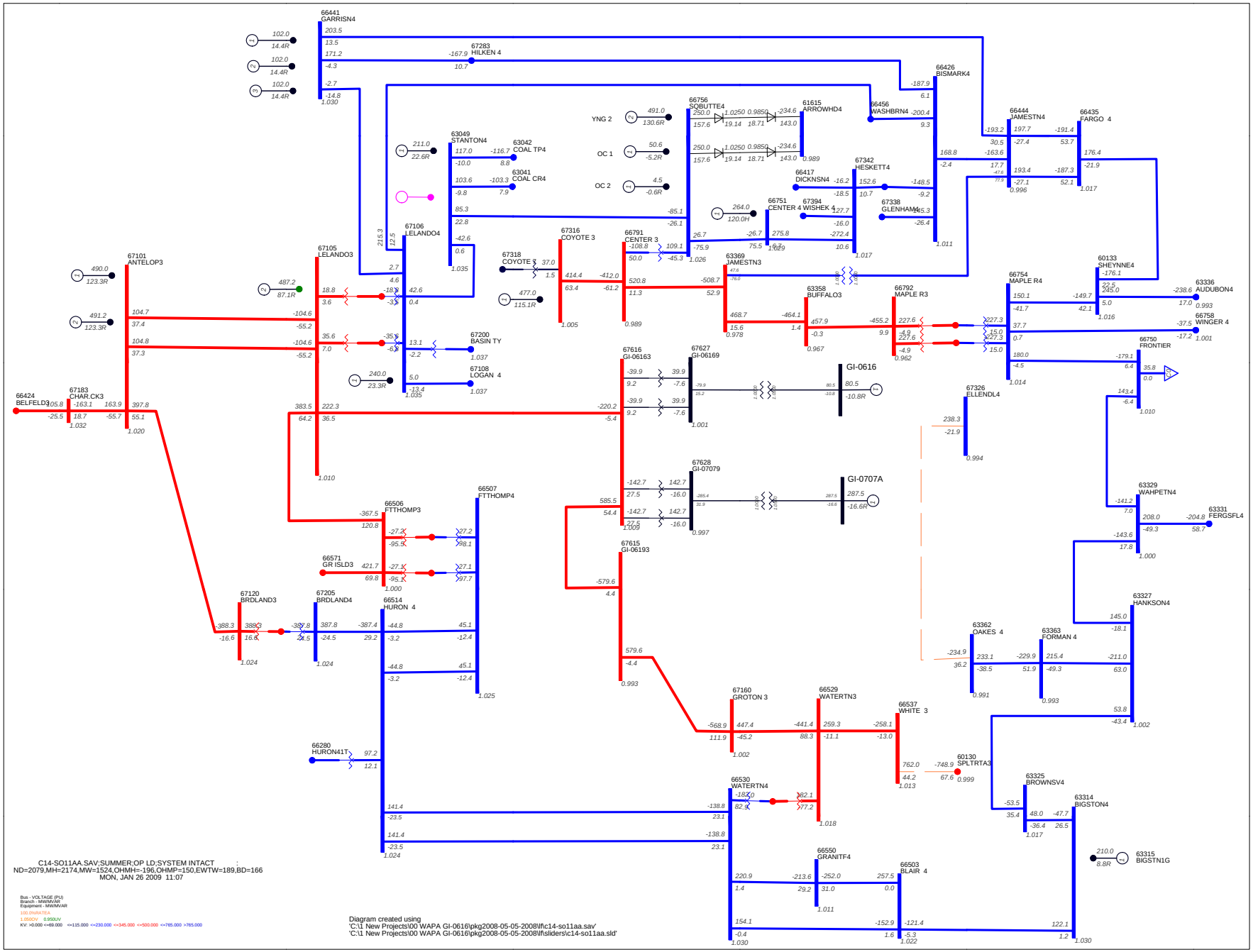

Figure 6.10: North Dakota - With GI-0616 & GI-0707A, Without GI-0619,With Jamestown 345/230 kV Transformer (Case c14)

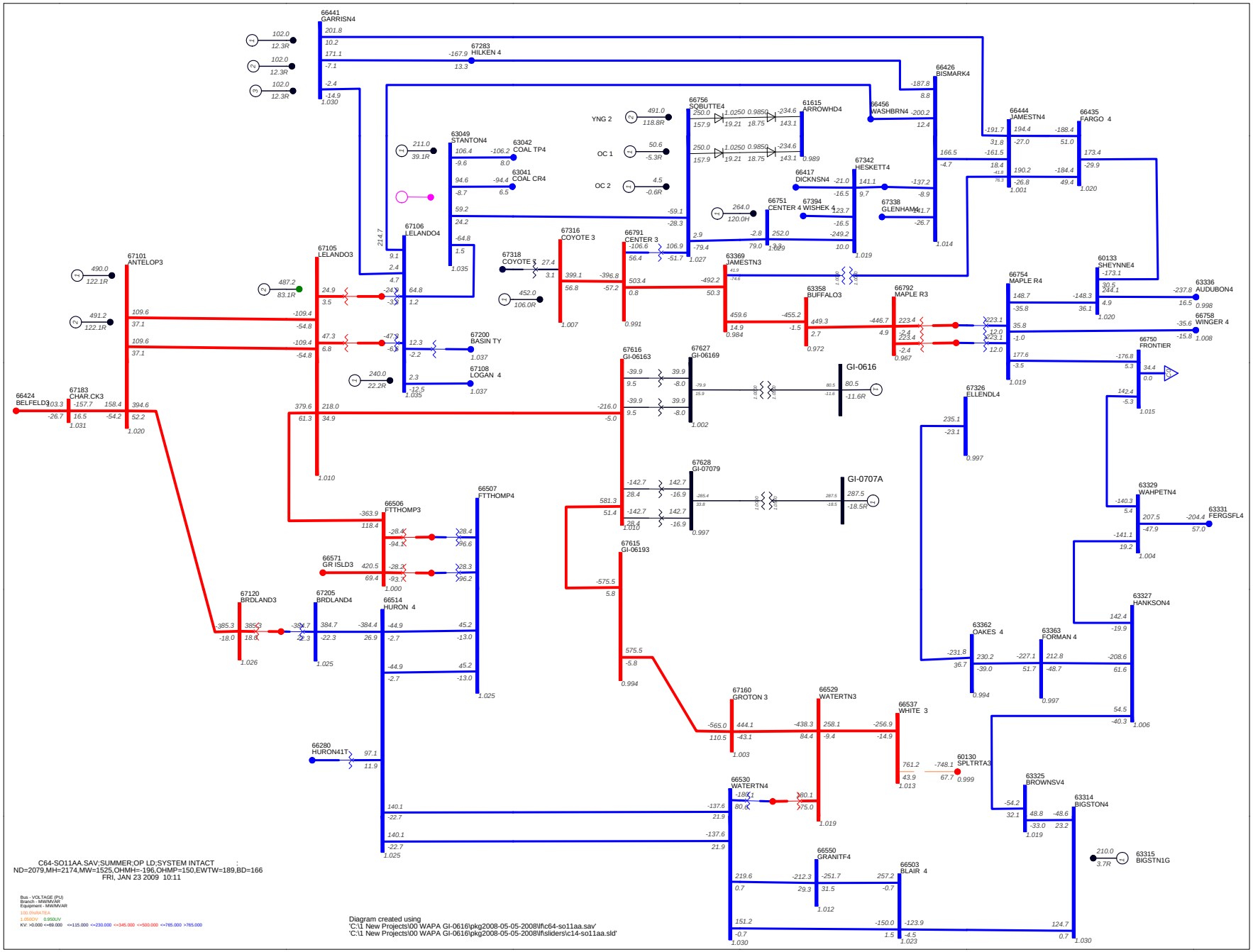

Figure 6.11: North Dakota - With GI-0616 & GI-0707A, Without GI-0619, Without G531 & G607, With Jamestown 345/230 kV Transformer (Case 64)

Table 6.1: Prior Queued Projects Included in 2011 Summer Off-Peak Case

IS Queue #	MISO Queue #	Queue Date	Point of Interconnect / County	ST	Net Plant Max MW Summer/Winter	In Service Date	Type of Gen. (Fuel)	POI Bus No.	Gen. Bus No.	Dispatch (MW) urg-so08aa.sav	Comment
(GI-0101a) Done	36922-03	31-Jan-01	Rapid City / Pennington	SD	200		N/A	67268-67269		0	RCDC (200 MW East) -- OFF for Stability
(GI-0208) Done	37427-01	20-Jun-02	Edgeley / LaMoure	ND	40		Wind	67280	67292	OFF	OFF for Stability as it improves transient stability
(GI-0209) Done	37427-02	20-Jun-02	Ft Thompson / Buffalo	SD	40		Wind	67281	67293	40	100%
(GI-0218) Done	37596-01	06-Dec-02	Clark / Clark	SD	~~15~~ 7.5		Waste Heat	66291	67278	6	
(GI-0219) Done	37596-02	06-Dec-02	Watertown / Codington	SD	~~15~~ 7.5		Waste Heat	66224	67279	6	
(GI-0314) Done	37774-02	03-Jun-03	Aberdeen / Brown	SD	8		Waste Heat	66290	67277	6	
(GI-0315) Done	37775-01	13-Jun-03	Solen / Morton	ND	8		Waste Heat	66257	67276	6	
(GI-0316) Done	37837-03	04-Aug-03	Groton / Brown	SD	120		Gas	66512	67274	OFF	Groton 1 -- OFF
(GI-0327) Done	37949-01	24-Nov-03	Flandreau / Moody	SD	~~20~~ 10		Diesel	66505	66229	OFF	OFF (probably a peaker)
(GI-0508)	38460-01	18-Apr-05	Bism-Garr 230kV #1 / Burleigh	ND	50		Wind	67283	67295	10.5	Wilton 1 -- 20% cf
(GI-0608)	38912-03	14-Jul-06	Groton / Brown	SD	120		Gas	66512	67274	OFF	Groton 2
(TI-0301)	37721-01	10-Apr-03	White / Brookings	SD	N/A		TI	In-Service	In-Service	In-Service	Transmission Int.
G132	37151-01	17-Sep-01	Dickey	ND	180		Wind	67396	67400		Model G132 at 100%cf based on Acciona model
G255 & G176	37517-01	18-Sep-02	Brookings	SD	100 each		Wind	60381	60071 to 60074	200	Part of SW MN Wind
G256	37519-01	20-Sep-02	Dawson	MT	45		Gas	67332	67332	OFF	Peaking unit
G291	37657-01	05-Feb-03	LaMoure	ND	19		Wind	63159	63161	4	20% cf
G370	37911-02	17-Oct-03	Minnehaha	SD	205		Gas	60129	60058	OFF	Anson #4
G408	38048-01	02-Mar-04	McHenry	ND	12		Wind	63089	63087	12	Velva Wind Okay
G502	38425-01	14-Mar-05	Oliver	ND	50		Wind	66756	61603	50	Oliver 1 100%
G767	39161-01	20-Mar-07	Fallon	MT	30		Wind	67394	67393	OFF	Diamond Willow Plant -- OFF in urg-so08aa.sav as it improves steady-state performance in Western ND
GM0100/200	38971-03	11-Sep-06	Cavalier	ND	159		Wind	66709	66881	31.5	Langdon Wind -- 20% cf
GS659	38915-01	17-Jul-06	Oliver	ND	50		Wind	66756	61606	50	Oliver 2 100%
(GI-0404)	38131-03	24-May-04	Killdeer / Dunn	ND	8	Fall 2008	Waste Heat	66419	99011	6	
(GI-0405)	38131-04	24-May-04	White / Brookings	SD	8	Fall 2009	Waste Heat	60503	90503	6	
(GI-0503)	38380-03	28-Jan-05	Minot / Ward	ND	100	Fall 2009	wind			20%	
(GI-0614a)	38974-01	14-Sep-06	Culbertson / Roosevelt	MT	10	Fall 2009	waste heat	67312	99013	6	
(GI-0615)	39008-01	18-Oct-06	Bism-Garr 230kV #1 / Burleigh	ND	50	Fall 2008	wind	67283	67301	20%	Wilton 2
(GI-0619)	39070-02	19-Dec-06	Leland Olds-Groton 345 / Dickey	ND	300	1/10/2010	Wind	67615	90619	100%	Model at 100% cf (Acciona)
(GI-0704)	39157-01	16-Mar-07	White / Brookings	SD	240	6/1/2012	Gas	66537	67996	100%	Deer Creek Project @ White 345 kV;
G531	38534-01	01-Jul-05	Mercer	ND	68	4/1/2009	Coal	63049	63003	100%	NORDAG
G607	38777-01	01-Mar-06	Mercer	ND	25	10/25/2008	Coal	67316	67315	100%	NORDAG
G645	38863-02	26-May-06	Stutsman	ND	50	11/1/2008	Coal	63270	63645	100%	
G710	39059-04	08-Dec-06	McIntosh	ND	10	1/1/2008	Waste Heat	67395	99014	100%	NORDAG 2A;

~green highlight is in-service
~yellow highlight will be in service by 2011 and already studied.

Table 6.2 GI-0616 and GI-0707A Stability Analysis Fault List

Code	Description	System
	Regional Faults	
ac3	4 cycle 3 phase fault at antelope valley 345 clear the antelope valley-broadland 345 kv line	N. Dakota
ad3	4 cycle 3 phase fault at antelope valley 345 clear the antelope valley-charlie creek 345 kv line	N. Dakota
ag1	Single line to ground fault with breaker fail at Leland Olds on the Ft. Thompson 345 kV line	N. Dakota
ag3	Three phase fault at Leland Olds on the Ft. Thompson 345 kV line.	N. Dakota
bl3	5 cycle 3 phase fault at stanton 230 clear the stanton-leland olds 230 kv line	N. Dakota
eb3	4.5 cy 3 ph flt @ center 345 on jamestown line clr center-jamestown 345 kv line	N. Dakota
ec3	5 cy 3 ph flt @ center 230 on heskett line clr center-heskett 230 kv line	N. Dakota
ecs	*4 cycle version of ec3*	N. Dakota
ef3	5 cycle 3 phase fault at stanton 230 clear the stanton-coal creek-mchenry 230 kv line	N. Dakota
ef9	*4 cycle version of ef9*	N. Dakota
el3	5 cy 3 ph flt @ center 230 on square butte line clr center-square butte 230 kv line	N. Dakota
ei2	Permanent bipole fault on the CUDC line. Both Coal Creek units tripped at 0.28 sec.	N. Dakota
eq1	4.5 cy slgf @ coal creek on pole 1, brkr 61rb1 stk clr @ 11 cy by tripping fltd pole & bus 1,cross trip ccs 2	N. Dakota
evs	4 cycle 3 phase fault at sqbt230p1 clr tripping sbdc p1, ramp sbdc p2 > **1000** amps @ 17 cy	N. Dakota
fd1	5 cycle slgf @ Square Butte-Stanton, breaker 18 stuck, Square Butte dc bipole blocked @ 1 cycle. Clear @ 11 cycles by tripping Square Butte-Stanton, ramp Square Butte dc pole 1 > 275 @ 17 cycles.	N. Dakota
fdk	Same as fd1 but with Young 2 unit trip @ 11 cycles	N. Dakota
fd3	5 cycle 3 phase fault @ Square Butte 230 on Stanton line. Clear Square Butte-Stanton 230 kV line.	N. Dakota
fds	*4 cycle version of fd3*	N. Dakota
fd4	5 cycle slgf @ Square Butte-Stanton, breaker 17 stuck, Square Butte dc bipole blocked @ 1 cycle. Clear @ 12 cycles by tripping Square Butte-Stanton, ramp Square Butte dc back @ 17 cycles.	N. Dakota
fdl	Same as fd4 but with Young 2 unit trip @ 12 cycles	N. Dakota
nmz	Three-phase fault at Chisago on Chisago County-Forbes 500 kV line. Trip F601C, transfer trip D602F. 100% reduction initiated from Chisago. Leave Forbes SVC on MP System following disturbance.	500 kV
pcs	Single line to ground fault with breaker fail at King with 8P6 stuck.	Prony
pct	Eau-Claire - Arpin 345 kV line trip without a fault.	Prony
pys	Single line to ground fault with breaker fail at Prairie Island with 8H9 stuck.	Prony
pyt	Prairie Island-Byron 345 kV line trip without a fault.	Prony
ya3	4 cycle 3 phase fault at Arrowhead 345 kV clear the Arrowhead - Gardner park 345 kv line	North Minn.
yas	4 CY SLG fault at Arrowhead 230 on AHD-GDP ckt #1 AHD brkr stk, clear at 17 cycles by tripping AHD-GDP bus section	North Minn.
	Local Faults	
ha3	4 cycle 3 phase fault at GI-0616 & GI-0707A Wind 345 kV Bus Clear the GI-616 & GI-0707A Wind-Leland Olds 345 kV line	N. Dakota
hb3	4 cycle 3 phase fault at Leland Olds 345 kV Bus Clear the Leland Olds-GI-0616 & GI-0707A 345 kV line	N. Dakota
hc3	4 cycle 3 phase fault at GI-0616 & GI-0707A Wind 345 kV Bus Clear the GI-616 & GI-0707A Wind-GI-0619 Wind 345 kV line	N. Dakota
hd3	4 cycle 3 phase fault at GI-0619 Wind 345 kV Bus Clear the GI-0619 Wind-GI-616 & GI-0707A Wind 345 kV line	N. Dakota
he3	4 cycle 3 phase fault at GI-0619 Wind 345 kV Bus Clear the GI-0619 Wind-Groton 345 kV line	N. Dakota

7. SHORT-CIRCUIT ANALYSIS

7.1 Base Case Development

The pre-project model used for this analysis is short-circuit case *08sc-102208.sav* included in the most recent NMORWG package.. This case includes the North Dakota Coal Field units as well as the two prior-queued generating units at Groton 115 (GI-0316 and GI-0508). For the purposes of this analysis, project GI-0619 was not modeled. Also, other prior-queued projects in North Dakota were not modeled (the reasoning is that the fault current contributions from these other wind farms are not expected to be significant especially in the Groton and Leland Olds vicinity).

Starting from this case, post-project case was developed by adding the proposed GI-0616 and GI-0707A projects.

Based on information provided by Siemens, the maximum short-circuit current contribution for a three-phase fault is approximately 1.8 pu (see reference [4]). Based on this information, a Zsorce value of 0.55 pu was assumed for the equivalent wind turbine generators in the short-circuit model. This assumption was made for GI-0616 as well as the proposed GI-0707A wind farm (both wind farms are based on the Siemens SWT-2.3-93 wind turbine generators).

7.2 Short-Circuit Calculations

Short-circuit calculations were performed to determine the impact of the proposed project on fault current levels at nearby substations. Three-phase symmetrical fault current levels were calculated at local area buses, both without and with the proposed projects. In order to calculate fault current levels, classical fault assumptions were used with a pre-fault voltage of 1.0 p.u.

Table 7.1 lists the three-phase fault current levels at those local substations. The highest of these fault currents was compared against the lowest rated circuit breaker at each of these substations to determine whether or not the circuit breaker may be overstressed.

A comparison of the fault currents to the capability of breakers at the local substations indicates that there is adequate interrupting capability following the addition of the new generation.

Note: Single-line-to-ground fault currents were not evaluated as part of this analysis because no information was available on the contribution of the Siemens wind units to SLG faults. However, SLG fault currents are generally less than three-phase fault currents and therefore should not be a concern as compared to the fault currents noted in Table 7.1.

Table 7.1: Fault Currents Without and With Proposed GI-0616 & GI-0707A Wind Farm

BUS			MIN. BREAKER RATING (AMP)	3-PH FAULT CURRENT (AMP)		
NO.	NAME	kV		WITHOUT GI-0616&GI-0707A	WITH GI-0616&GI-0707A	CHANGE
67105	LELANDO3	345.0	40,000	14,129	14,468	339
66512	GROTON 7	115.0	17,000	14,187	14,477	290
67106	LELANDO4	230.0	37,653	19,263	19,508	245
67160	GROTON 3	345.0	40,000	4,987	5,198	211
67101	ANTELOP3	345.0	40,000	13,798	13,957	159
66529	WATERTN3	345.0	40,000	6,599	6,676	77

8. CONCLUSIONS

The collective impact of interconnecting 367 MW of wind generation on the Leland Olds-Groton 345 kV line in Logan County, ND has been evaluated. The evaluation involved assessment of system performance based on stability analysis, steady-state analysis, constrained interface analysis, and short-circuit analysis.

This is an out-of-queue study. Analyses were performed using models set up to simulate anticipated system conditions in the year 2011. Several prior-queued projects that are likely to be in service in this time frame were included in the study models based on discussions with the study ad hoc group. Among these projects is a proposed 300 MW wind farm on the Leland Olds-Groton 345 kV line (Project GI-0619) whose queue position is in between the proposed GI-0616 and GI-0707A wind farms. This wind farm was included as a prior-queued project in the initial analyses, but subsequently excluded. Addition of the GI-0619 wind farm will require further studies. The results summarized below are without the GI-0619 wind farm.

Steady-State Analysis:
The interconnection of the proposed GI-0616 and GI-0707A wind farms impacted several transmission facilities and resulted in steady-state criteria violations based upon the modeled delivery of the generator's output to loads outside the North Dakota boundaries. A separate Delivery Study will be performed to identify delivery related impacts and associated system upgrades, if any.

The incremental impact of the proposed GI-0616 & GI-0707A projects on facility loadings under system intact conditions is insignificant.

Under contingency conditions, several transmission facilities were significantly impacted. Particular attention was given to the following facilities that became newly overloaded following the addition of the proposed projects. These facilities are in the vicinity of the Leland Olds and Groton substations and are considered injection constraints:

- **Leland Olds 345/230 kV Transformer #1 (Rate A=250 MVA ; Rate C=312 MVA):** This transformer became overloaded above its normal 250 MVA rating both in the pre- and post-project cases following the loss of the parallel #2 transformer. Post-contingency loading is 309 MVA (post-project case) or 99% based on the emergency rating of 312 MVA. The proposed wind farms could be run back if it is desired to further reduce the post-contingency loading on this transformer.

- **Groton-Bristol 115 kV line (Rate A=120 MVA ; Rate C=122 MVA):** This facility became newly overloaded following the loss of the Groton-Watertown 345 kV line. Post-contingency loadings are 102 MVA (pre-

project) and 132 MVA (post-project). The overloads on this line may be addressed by upgrading or reconductoring the transmission line.

- **Groton-Redfield 115 kV line (Rate A=80 MVA ; Rate C=88 MVA):** This facility became newly overloaded following the loss of the Groton-Watertown 345 kV line. Post-contingency loadings are 60 MVA (pre-project) and 89 MVA (post-project). Terminal equipment replacement/adjustments would be required to allow this line to be increased to its conductor loading limit of 128 MVA.

- **Groton-Aberdeen 115 kV line (Rate A=120 MVA; Rate C=132 MVA) :** This facility became newly overloaded following the loss of the Groton-Watertown 345 kV line. Post-contingency loadings are 110 MVA (pre-project) and 143 MVA (post-project). Terminal equipment replacement/adjustments would be required to allow this line to be increased to its conductor loading limit of 178 MVA.

Constrained Interface Analysis:

The study also evaluated the impact of the proposed projects on constrained interfaces in the MAPP system. These results are for informational purposes only to identify potential third party flowgate issues for the requested delivery component of the transmission. Results indicate that the proposed projects adversely impact the NDEX interface with PTDF = 82.5%. This is a consequence of dispatching the proposed wind farms to loads outside the North Dakota boundaries.

Stability Analysis:

The impact of the proposed wind farms on local area and regional stability performance was evaluated. For the purposes of this analysis, the proposed wind farms are dispatched against loads within the NDEX boundaries and NDEX is assumed to be 2080 MW.

Results indicate that the proposed wind farms would adversely impact local area and regional stability performance. Results are summarized below:

In the pre-project case, transient voltage violations (0.67 pu) were observed at Jamestown 345 kV bus following fault ef3 (5 cycle 3-phase fault at Stanton 230 on the Coal Creek-McHenry line). One possible solution that has been studied by area transmission owners is to reduce the ef3 fault clearing time from 5 cycles to 4 cycles by replacing the existing breakers at Stanton 230 on the Coal Creek line with faster two-cycle breakers. Fault ef9 was tested with the 4 cycle fault clearing time and no criteria violations were found.

In the post-project case, fault ef3 rendered the system unstable. Fault ef9 resulted in transient voltage violations (0.68 pu) at Jamestown 345 kV. Faults ac3 (4 cycle 3-phase fault on Antelope valley – Broadland 345 kV line) and ag1 (4

cycle single-line-to-ground fault on Leland Olds – Ft. Thompson 345 kV line with breaker failure) resulted in transient voltage violations (0.68 pu) at GI-0616 and GI-0707A 345 kV POI.

In order to mitigate the above criteria violations, the following reinforcements were tested:

- To support base case voltages and mitigate transient voltages at proposed Wind Farms 345 kV POI: Add 2*60 MVAr switched capacitor at the GI-0616 and GI-0707A 345 kV POI

- To reduce the loop flows on the Center – Jamestown 345 kV line to such an extent that the transient voltage violations at Jamestown 345 kV are mitigated: Add 15% Series Compensation on the Leland Olds – Ft. Thompson 345 kV line

No criteria violations were observed with the above system reinforcements (and 4 cycle clearing at Stanton 230 for ef9).

In lieu of series compensation on the Leland Olds-Ft. Thompson 345 kV line and breaker replacements at Stanton 230 kV, the following reinforcements were tested to mitigate the pre- and post-project criteria ef3 violations in the Jamestown area:

- Add a 345/230 transformer (250 MVA) to connect the Jamestown 345 kV and 230 kV buses

With the above system reinforcements, no transient voltage violations were observed both in the pre- and post-project cases.

In lieu of series compensation on the Leland Olds-Ft. Thompson 345 kV line, breaker replacements at Stanton 230 kV, and a 345/230 kV transformer at Jamestown, the following third-party reinforcement may be considered to mitigate the pre- and post-project criteria ef3 violations in the Jamestown area:

- Pre-project Case
  2*60 MVAr switched capacitor at Jamestown 345 kV

- Post-project Case
  2*60 MVAr switched capacitor at Jamestown 345 kV
  120 MVAr SVC at Jamestown 345 kV

With the above system reinforcements, no criteria violations were observed both in the pre- and post-project cases.

The above results showed fault ef3 to be the most limiting fault from a stability perspective. The ef3 violations are attributable to prior-queued projects G531 (68

MW coal unit at Stanton 230) and G607 (25 MW uprate of the existing Coyote unit). A sensitivity analysis was performed to check the impact of the proposed wind farms on stability performance following fault ef3 under the assumption that projects G531 and G607 do not proceed with their interconnection requests or that the facility reinforcements are not available due to the associated projects not being in service prior to project GI-0616/0707A. For the purposes of this analysis, the switched capacitors at the GI-0616 and GI-0707A 345 kV POI are assumed to be the same as before (2*60 MVAr). The following observations are made:

1. Adding the proposed projects resulted in transient voltage violations at Jamestown 345 kV bus (0.67 pu) following fault ef3.

2. Series compensating the Leland Olds-Ft. Thompson 345 kV line by 20% mitigates the post-project ef3 violations.

3. The addition of a 345/230 kV transformer at Jamestown is an alternative to series compensating the Leland Olds-Ft. Thompson 345 kV line to mitigate the ef3 violations.

The above results show that with the addition of system reinforcements, the criteria violations associated with the proposed GI-0616 and GI-0707A Wind Farms on system stability performance can be mitigated.

Although series compensation is effective from a stability perspective, additional studies are needed to fully assess the impact of series compensation on transmission system performance. These studies should cover the impact of series compensation on transmission system fault current levels, potential for sub-synchronous resonance (SSR) and steady-state performance.

Also, additional analysis will be required if there is further interest in adding a 345/230 kV transformer at Jamestown.

<u>Short-Circuit Analysis</u>:
Short-circuit calculations were performed to determine the impact of the proposed project on fault current levels at nearby substations. Three-phase symmetrical fault current levels were calculated at local area buses, both without and with the proposed projects. A comparison of the fault currents to the capability of breakers at the local substations indicates that there is adequate interrupting capability following the addition of the new generation.

The results of this study are based on available data and assumptions made at the time of conducting this study. If any of the data and/or assumptions made in developing the study models change, the results provided in this report may not apply.

9. REFERENCES

[1] Attachment A of MAPP Design Review Subcommittee Policies and Procedure Manual (Version 5.0) - “Steady-State Facility and Flowgate Impact Determination Requirements and Screening Guidelines for Study Submissions”, Prepared by MAPP Design Review Subcommittee Members, June 2007.

[2] “SMK203 – V1.1 User Information for PSS/E Simulation Package for Siemens Wind Power SWT-2.3-93 60 Hz Wind Turbine”. Report prepared by Siemens Wind Power A/S, November 2006.

[3] “300 MW Yearly Firm Network Transmission Service Request – Follow-up evaluation of 130 MW NDEX Increase”, by WAPA UGPR, September 24, 2004.

[4] “Short Circuit Current Information For Siemens Variable Speed Wind Turbines Ver 01”, by Jorgen Nygaard Nielsen, November 22, 2006.

APPENDIX A – STEADY-STATE MODEL OF PROPOSED WIND FARMS

Appendix A.1: GI-0616 & GI-0707A Power Flow Data

```
0,   100.00          / PSS/E-29.4    FRI, AUG 22 2008  14:47
A04-SP11AA.SAV;SUMMER;PK LD;SYSTEM INTACT           :
ND=1297,MH=1307,MW=895,OHMH=0,OHMP=150,EWTW=-120,BD=165
67616,' GI-0616', 345.0000,1,     0.000,     0.000, 652, 659,1.03060,  39.5962, 659
90617,'GI616REC',   0.6900,1,     0.000,     0.000, 652, 659,0.99958,  42.5407,   1
90618,'GI616INV',   0.6900,1,     0.000,     0.000, 652, 659,1.00000,  44.6165,   1
90708,'GI707REC',   0.6900,1,     0.000,     0.000, 652, 659,0.99851,  42.3644,   1
90709,'GI707INV',   0.6900,1,     0.000,     0.000, 652, 659,1.00000,  46.6769,   1
0 / END OF BUS DATA, BEGIN LOAD DATA
0 / END OF LOAD DATA, BEGIN GENERATOR DATA
0 / END OF GENERATOR DATA, BEGIN BRANCH DATA
67105,-67616,'1 ',   0.00429,   0.06282,   0.67389,  717.00, 1159.00,  789.00,  0.00000, -0.68000,  0.00000,  0.00000,1,   0.00,
659,1.0000
67615, 67616,'1 ',   0.00172,   0.02513,   0.26954,  717.00, 1159.00,  789.00,  0.00000,  0.00000,  0.00000,  0.00000,1,   0.00,
659,1.0000
90616, 90617,'1 ',   0.00100,   0.00100,   0.00000,    0.00,    0.00,    0.00,  0.00000,  0.00000,  0.00000,  0.00000,1,   0.00,
1,1.0000
90707, 90708,'1 ',   0.00100,   0.00100,   0.00000,    0.00,    0.00,    0.00,  0.00000,  0.00000,  0.00000,  0.00000,1,   0.00,
1,1.0000
0 / END OF BRANCH DATA, BEGIN TRANSFORMER DATA
67627,67616,    0,'1 ',1,2,1,   0.00000,   0.00000,2,'        ',1,   1,1.0000
   0.00000,   0.10000,  105.00
1.00000,   0.000,   0.000,  105.00,    0.00,    0.00, 0,     0, 1.10000, 0.90000, 1.10000, 0.90000,  33, 0, 0.00000, 0.00000
1.00000,   0.000
67627,67616,    0,'2 ',1,2,1,   0.00000,   0.00000,2,'        ',1,   1,1.0000
   0.00000,   0.10000,  105.00
1.00000,   0.000,   0.000,  105.00,    0.00,    0.00, 0,     0, 1.10000, 0.90000, 1.10000, 0.90000,  33, 0, 0.00000, 0.00000
1.00000,   0.000
67628,67616,    0,'1 ',1,2,1,   0.00000,   0.00000,2,'        ',1,   1,1.0000
   0.00000,   0.10000,  180.00
1.00000,   0.000,   0.000,  180.00,    0.00,    0.00, 0,     0, 1.10000, 0.90000, 1.10000, 0.90000,  33, 0, 0.00000, 0.00000
1.00000,   0.000
67628,67616,    0,'2 ',1,2,1,   0.00000,   0.00000,2,'        ',1,   1,1.0000
   0.00000,   0.10000,  180.00
1.00000,   0.000,   0.000,  180.00,    0.00,    0.00, 0,     0, 1.10000, 0.90000, 1.10000, 0.90000,  33, 0, 0.00000, 0.00000
1.00000,   0.000
67627,90618,    0,'1 ',1,2,1,   0.00000,   0.00000,2,'        ',1,   1,1.0000
   0.00840,   0.06000,   91.00
1.05000,   0.000,   0.000,    0.00,    0.00,    0.00, 0,     0, 1.10000, 0.90000, 1.10000, 0.90000,  33, 0, 0.00000, 0.00000
1.00000,   0.000
67628,90709,    0,'1 ',1,2,1,   0.00000,   0.00000,2,'        ',1,   1,1.0000
   0.00840,   0.06000,  325.00
1.05000,   0.000,   0.000,    0.00,    0.00,    0.00, 0,     0, 1.10000, 0.90000, 1.10000, 0.90000,  33, 0, 0.00000, 0.00000
1.00000,   0.000
0 / END OF TRANSFORMER DATA, BEGIN AREA DATA
 652,66559,  1194.000,    10.000,'WAPA    '
0 / END OF AREA DATA, BEGIN TWO-TERMINAL DC DATA
0 / END OF TWO-TERMINAL DC DATA, BEGIN VSC DC LINE DATA
'GI0616  ',1,    0.0001,   1,1.0000
```

```
90617,2,2,    -80.50,-0.90000,     0.000,     0.000,     0.000,      0.00,      0.00,1.00000,   9999.00,  -9999.00,    0,  100.0
90618,1,1,      1.00, 1.00000,     0.000,     0.000,     0.000,     92.00,  76787.00,1.00000,   9999.00,  -9999.00,    0,  100.0
'GI0707A ',1,    0.0001,   1,1.0000
90708,2,2,   -287.50,-0.90000,     0.000,     0.000,     0.000,      0.00,      0.00,1.00000,   9999.00,  -9999.00,    0,  100.0
90709,1,1,      1.00, 1.00000,     0.000,     0.000,     0.000,    327.75, 240562.00,1.00000,   9999.00,  -9999.00,    0,  100.0
0 / END OF VSC DC LINE DATA, BEGIN SWITCHED SHUNT DATA
0 / END OF SWITCHED SHUNT DATA, BEGIN IMPEDANCE CORRECTION DATA
0 / END OF IMPEDANCE CORRECTION DATA, BEGIN MULTI-TERMINAL DC DATA
0 / END OF MULTI-TERMINAL DC DATA, BEGIN MULTI-SECTION LINE DATA
0 / END OF MULTI-SECTION LINE DATA, BEGIN ZONE DATA
 659,'BEPC_659'
0 / END OF ZONE DATA, BEGIN INTER-AREA TRANSFER DATA
0 / END OF INTER-AREA TRANSFER DATA, BEGIN OWNER DATA
   1,'CENT HUD'
 659,'BEPC_659'
0 / END OF OWNER DATA, BEGIN FACTS DEVICE DATA
0 / END OF FACTS DEVICE DATA
```

APPENDIX B – STEADY-STATE ANALYSIS – CASE SUMMARIES

Appendix B.1: Summary for Case a02-sp11aa.sav (Without GI-0616 & GI-0707A)

```
INITIATED AT LOAD FLOW ENTRY POINT ON MON, JAN 12 2009  15:38

A02-SP11AA.SAV;SUMMER;PK LD;SYSTEM INTACT           :
ND=1298,MH=1303,MW=842,OHMH=0,OHMP=151,EWTW=-120,BD=167


                    P O W E R   F L O W   S U M M A R Y
-------------------------------------------------------------------------------
               NDEX:      1298 MW         ECL-ARP:  362 MW
               MHEX:      1303 MW         PRI-BYN:  180 MW
               MWEX:       842 MW         AHD-SLK:  308 MW
               KING-ECL:   533 MW         SLK-GPK:  192 MW
               COOPER S:   392 MW         WNE-WKS:  354 MW
               FTCAL S:    262 MW         GGS:     1516 MW
               GRIS-LNC:   395 MW         QC WEST:  761 MW

           LOAD LEVELS AS PERCENT OF 2011 SUMMER PEAK:
           NORTH DAKOTA (ZONE 90,990) 3743.0 MW, 111.4% OF  3360.2 MW
           NSP             (AREA 600) ****** MW, 100.1% OF  11140.0 MW
           MAN HYDRO       (AREA 667) 3043.5 MW, 100.0% OF  3043.0 MW

Load/Losses   MW  / MW       Generation        MW       Export            MW
----------- ------ -----     --------------- ------     --------------- ------
Manitoba      3043/ 265      MH total gross    4780     ATC West Import    799
Ont. total   23241/ 566         Wpg River       534     ATC SW Import      784
     NW          0/   0         7 Sisters       165     ATC SE Import     -623
Sask.         3084/ 103      OH total gross   23418     East Bias          281
MP            2162/ 191         northwest         0     SPC>WAPA (B10T)    167
NSP          11146/ 410      SPC total gross   3189     MH>SPC  (3-230)    230
N. Dakota     3743/ 337      MP total gross    2241     MH>SPC  (FALLS)    -63
Manitoba       707 MVARS     ND Cfd AC gross   3114     OH>MH  @Kenora       0
Ont. total   13541 MVARS              net      2943     OH>MP  @Ft Fran    151
     NW          0 MVARS     NSP East gross    3013     OH E>W @Wawa      -120
Sask.          725 MVARS              net      2873     OH>East USA          0
MP           10355 MVARS         West gross    2931     F601C  @Forbes     901
NSP           1882 MVARS              net      2769     D602F  @Dorsey    1172
N. Dakota      792 MVARS         Total net    10071     L20D   @Letell     146
ATC          15130/ 399      WAPA SD Hydro     1594     R50M   @Richer      99
ATC           4585 MVARS     Pleasant Valley    422     G82R   @Glenboro  -115
                             LGS/Trimont        264
                             SW MN Wind         686
                             N DAK WIND         734
                             Swing Bus         1999


Tfmrs          MVA/ Load     Ph Shifters  Deg/  MW      DC Lines          MW
------------- ---- -----     ------------ --- -----     --------------- ------
Wshell #1 7-7   43/  30%     Stinson        0/  109     CU (1,2)         1075
Wshell #2 7-7   43/  30%     Boundary Dam  44/  168     SQ BU (3,4)       400
Drayton#1 4-7   16/  11%     Whiteshell   -24/    1     MH Bipole 1      1406
Drayton#2 4-7   20/  10%     Int Falls    -23/  150     MH Bipole 2      1592
Dorsey #1 2-4  548/  45%     St. Lawrence  17/    0     MH (BP1+BP2)     2998
Dorsey #2 2-4  639/  53%     Arrowhead      0/  308     Miles City E>W   -149
Forbes    2-4  126/  18%                                 RCDC (15)        -199
Stone Lk  3-5  114/  38%                                 Stegall (10)        0

Dorsey SC's       I/S  MVAR  Qmax/ Qmin    SVC's              MVAR  Qmax/ Qmin
----------------- --- -----  ---- -----    ---------------- -----  ---- -----
MIL 7-9G     17.0  2    363   600/ -330    Forbes        500     3   400/ -450
SCE 1-3G     18.2  3    296   480/ -240    Fargo        13.2    20    20/ -135
SCA 4-6G     18.2  3    296   480/ -240    Watertown    20.0    54   125/  -86
                        -----  ---- -----
       Total            955  1560/ -810    Series Caps       Num In Serv
       Margin           605                ---------------- -----------
                                           Roseau        500   2 of 2
                                           Chisago       500   1 of 1
```

Caps/Reactors	MVAR	Caps/Reactors	MVAR	Caps/Reactors	MVAR
Balta (FS) 230	60	Arrowhead 230	120	Chisago T 9 34.5	25
Drayton 115	40	Blackberry 230	47	Chisago T 10 34.5	25
Drayton 13.8	0	Minntac 115	45	Forbes 230	0
Eau Claire(FS) 161	267	Riverton 230	47	Forbes 500	300
Kohlman Lake 115	240	Roseau Co.(FS) 230	30		0
Parkers Lk(FS) 115	0	Running (FS) 230	30	Fargo 115	81
Prairie (FS) 115	120	Running react 230	-20	Watertown 20	20
Ramsey (FS) 230	0	Shannon 230	0	Watertown 230	76
Red Rock 115	240		0		0
Rugby 13.8	-25	Glenboro 230	0	Arrowhead 345	0
Split Rock(FS) 115	0	Laverendrye 110	98	Stone Lake 345	0
Sheyenne (FS) 115	160	Richer react 230	0	Stone Lk Reac 345	0
Wilton/Bemidji 115	20	St Vital 110	98	Stone Lake 161	0
	0		0	Grdnr Pk Reac 345	0
	0		0	Grdnr Pk Caps 115	0
	0		0	Arpin Caps 138	50
	0		0	Council Creek 138	16

Bus Voltages	V,pu	Bus Voltages	V,pu	Bus Voltages	V,kV
Adams 345	1.016	Arrowhead 230	1.021	Whiteshell 110	119.1
Alexandria 115	1.026	Badoura 115	0.990	Kenora 220	249.1
Audubon 115	0.994	Blackberry 230	1.025	Dryden 220	252.5
Bemidji 115	1.006	Boise Cascade 13.8	1.029	Fort Frances 220	252.4
Byron 345	1.029	Boise Cascade 115	1.018	Mackenzie 220	253.6
Chisago Co. 345	1.031	ETCO 115	1.017	Lakehead 220	239.7
Chisago Co. 500	1.031	Forbes 230	1.027	Marathon 220	240.8
Drayton 230	1.019	Forbes 500	1.028	Wawa 220	238.1
Eau Claire 345	1.030	Hubbard 115	0.000	Mississagi 220	242.9
WEST FARIBAULT 115	1.016	Intl Falls 115	1.020	Fort Frances 118	120.4
LaPorte 115	0.991	Minntac 115	1.024	Lakehead 118	124.2
Maple River 230	1.001	Moranville 230	1.021	Birch 118	120.4
Marshall Tap 115	1.013	Riverton 230	1.005	Marathon 118	125.6
Owatonna 161	0.995	Running 230	1.016		0.000
Prairie 115	1.025	Shannon 230	1.021	Arrowhead 345	1.036
Prairie 230	1.011	Stinson MN 115	1.014	Stone Lake 345	1.041
Ramsey 230	0.986	Jamestown 345	0.942	Stone Lake 161	1.033
Roseau County 230	1.023	Groton 345	1.008	Gardner Park 345	1.020
Roseau County 500	1.036	Watertown 230	1.030	Weston 115	1.031
Sheyenne 230	1.005	Watertown 345	1.022	Arpin 345	1.022
Thief R Falls 115	1.001		0.000	Eau Claire 161	1.023
Tioga 230	1.031	Dorsey 230	1.045	Council Creek 161	0.935
Wahpeton 230	0.976	Dorsey 500	1.008	Hydro Lane 161	1.000
Winger 115	1.019		0.000	Wien 115	1.033
	0.000		0.000		0.000
	0.000		0.000		0.000
	0.000		0.000		0.000

Steady State Relay Margins (measured from inner blinder)

Relay Location	Manuf/Type	PSS Model	South	North	Em North
1) B10T-Tioga (South)	GE OST	SLLP	330%	N/A	N/A
2) -Tioga (North)	GE OST	SLLP	679%	N/A	N/A
3) -Tioga (Em North)	GE OST	SLLP		N/A	N/A
4) D602F-Dorsey	ATP ???	SLINOS	740%	N/A	N/A
5) -Forbes (Normal)	ATP ???	SLINOS	480%	N/A	N/A
6) -Forbes (Em Nrth)	APT S-PRO	SLINOS		N/A	N/A
8) F3M-Intl Falls	APT S-PRO	SLINOS	329%	N/A	N/A
9) G82R-Rugby	APT	SLINOS	N/A	499%	
10) L20D-Drayton (Normal)	APT, ASEA	SLINOS	1519%	N/A	N/A
11) -Drayton (Em Nrth)	ASEA RXZF2	SLINOS		N/A	N/A
12) R50M-Moranville (Norm)	APT, West	SLINOS	1344%	N/A	N/A
13) -Moranville (Em N)	ASEA RXZF2	SLINOS		N/A	N/A

Appendix B.2: Summary for Case a04-sp11aa.sav (With GI-0616 & GI-0707A)

```
INITIATED AT LOAD FLOW ENTRY POINT ON MON, JAN 12 2009  15:39

A04-SP11AA.SAV;SUMMER;PK LD;SYSTEM INTACT           :
ND=1601,MH=1307,MW=895,OHMH=0,OHMP=150,EWTW=-120,BD=165


                    P O W E R   F L O W   S U M M A R Y
-------------------------------------------------------------------------------
               NDEX:      1601 MW         ECL-ARP:  395 MW
               MHEX:      1307 MW         PRI-BYN:  217 MW
               MWEX:       895 MW         AHD-SLK:  328 MW
               KING-ECL:   566 MW         SLK-GPK:  215 MW
               COOPER S:   451 MW         WNE-WKS:  369 MW
               FTCAL S:    296 MW         GGS:     1528 MW
               GRIS-LNC:   421 MW         QC WEST:  732 MW

           LOAD LEVELS AS PERCENT OF 2011 SUMMER PEAK:
           NORTH DAKOTA (ZONE 90,990) 3743.0 MW, 111.4% OF  3360.2 MW
           NSP             (AREA 600) ****** MW, 100.1% OF  11140.0 MW
           MAN HYDRO       (AREA 667) 3043.5 MW, 100.0% OF  3043.0 MW

Load/Losses   MW  / MW       Generation        MW       Export            MW
----------- ------ -----     --------------- ------     --------------- ------
Manitoba      3043/ 264      MH total gross    4780     ATC West Import    867
Ont. total   23241/ 566         Wpg River       534     ATC SW Import      770
     NW          0/   0         7 Sisters       165     ATC SE Import     -670
Sask.         3084/ 103      OH total gross   23418     East Bias          308
MP            2162/ 194         northwest         0     SPC>WAPA (B10T)    165
NSP          11146/ 426      SPC total gross   3189     MH>SPC  (3-230)    228
N. Dakota     3743/ 364      MP total gross    2241     MH>SPC  (FALLS)    -63
Manitoba       707 MVARS     ND Cfd AC gross   3114     OH>MH  @Kenora       0
Ont. total   13541 MVARS              net      2943     OH>MP  @Ft Fran    150
     NW          0 MVARS     NSP East gross    3013     OH E>W @Wawa      -120
Sask.          725 MVARS              net      2873     OH>East USA          0
MP           10348 MVARS         West gross    2931     F601C  @Forbes     936
NSP           1882 MVARS              net      2769     D602F  @Dorsey    1202
N. Dakota      792 MVARS         Total net    10071     L20D   @Letell     135
ATC          15130/ 400      WAPA SD Hydro     1594     R50M   @Richer     102
ATC           4585 MVARS     Pleasant Valley    422     G82R   @Glenboro  -133
                             LGS/Trimont        264
                             SW MN Wind         686
                             N DAK WIND         734
                             Swing Bus         2121


Tfmrs          MVA/ Load     Ph Shifters  Deg/  MW      DC Lines          MW
------------- ---- -----     ------------ --- -----     --------------- ------
Wshell #1 7-7   43/  30%     Stinson        1/  110     CU (1,2)         1075
Wshell #2 7-7   43/  29%     Boundary Dam  47/  166     SQ BU (3,4)       400
Drayton#1 4-7   15/  10%     Whiteshell   -18/    0     MH Bipole 1      1406
Drayton#2 4-7   19/  10%     Int Falls    -18/  149     MH Bipole 2      1592
Dorsey #1 2-4  562/  46%     St. Lawrence  17/    0     MH (BP1+BP2)     2998
Dorsey #2 2-4  653/  54%     Arrowhead      0/  328     Miles City E>W   -149
Forbes    2-4  123/  18%                                 RCDC (15)        -199
Stone Lk  3-5  111/  37%                                 Stegall (10)        0

Dorsey SC's       I/S  MVAR  Qmax/ Qmin    SVC's              MVAR  Qmax/ Qmin
----------------- --- -----  ---- -----    ----------------- -----  ---- -----
MIL 7-9G     17.0  2    367   600/ -330    Forbes        500     5   400/ -450
SCE 1-3G     18.2  3    299   480/ -240    Fargo        13.2    20    20/ -135
SCA 4-6G     18.2  3    299   480/ -240    Watertown    20.0   109   125/  -86
                        -----  ---- -----
       Total            966  1560/ -810    Series Caps       Num In Serv
       Margin           594                 ----------------- -----------
                                            Roseau        500   2 of 2
                                            Chisago       500   1 of 1
```

Caps/Reactors	MVAR	Caps/Reactors	MVAR	Caps/Reactors	MVAR
Balta (FS) 230	120	Arrowhead 230	120	Chisago T 9 34.5	25
Drayton 115	40	Blackberry 230	47	Chisago T 10 34.5	25
Drayton 13.8	0	Minntac 115	45	Forbes 230	0
Eau Claire(FS) 161	267	Riverton 230	47	Forbes 500	300
Kohlman Lake 115	240	Roseau Co.(FS) 230	30		0
Parkers Lk(FS) 115	0	Running (FS) 230	30	Fargo 115	81
Prairie (FS) 115	160	Running react 230	-20	Watertown 20	20
Ramsey (FS) 230	0	Shannon 230	0	Watertown 230	76
Red Rock 115	240		0		0
Rugby 13.8	-25	Glenboro 230	0	Arrowhead 345	0
Split Rock(FS) 115	0	Laverendrye 110	98	Stone Lake 345	0
Sheyenne (FS) 115	200	Richer react 230	0	Stone Lk Reac 345	0
Wilton/Bemidji 115	20	St Vital 110	98	Stone Lake 161	0
	0		0	Grdnr Pk Reac 345	0
	0		0	Grdnr Pk Caps 115	0
	0		0	Arpin Caps 138	50
	0		0	Council Creek 138	16

Bus Voltages	V,pu	Bus Voltages	V,pu	Bus Voltages	V,kV
Adams 345	1.015	Arrowhead 230	1.017	Whiteshell 110	119.1
Alexandria 115	1.020	Badoura 115	0.987	Kenora 220	249.1
Audubon 115	0.993	Blackberry 230	1.024	Dryden 220	252.5
Bemidji 115	1.007	Boise Cascade 13.8	1.029	Fort Frances 220	252.4
Byron 345	1.028	Boise Cascade 115	1.018	Mackenzie 220	253.6
Chisago Co. 345	1.029	ETCO 115	1.015	Lakehead 220	239.7
Chisago Co. 500	1.029	Forbes 230	1.025	Marathon 220	240.8
Drayton 230	1.029	Forbes 500	1.026	Wawa 220	238.1
Eau Claire 345	1.028	Hubbard 115	0.000	Mississagi 220	242.9
WEST FARIBAULT 115	1.016	Intl Falls 115	1.020	Fort Frances 118	120.4
LaPorte 115	0.991	Minntac 115	1.023	Lakehead 118	124.2
Maple River 230	1.005	Moranville 230	1.020	Birch 118	120.4
Marshall Tap 115	1.012	Riverton 230	1.003	Marathon 118	125.6
Owatonna 161	0.995	Running 230	1.015		0.000
Prairie 115	1.048	Shannon 230	1.020	Arrowhead 345	1.031
Prairie 230	1.027	Stinson MN 115	1.011	Stone Lake 345	1.037
Ramsey 230	0.993	Jamestown 345	0.940	Stone Lake 161	1.030
Roseau County 230	1.022	Groton 345	0.999	Gardner Park 345	1.020
Roseau County 500	1.035	Watertown 230	1.030	Weston 115	1.031
Sheyenne 230	1.009	Watertown 345	1.018	Arpin 345	1.022
Thief R Falls 115	1.011		0.000	Eau Claire 161	1.022
Tioga 230	1.030	Dorsey 230	1.045	Council Creek 161	0.934
Wahpeton 230	0.972	Dorsey 500	1.007	Hydro Lane 161	0.999
Winger 115	1.025		0.000	Wien 115	1.032
	0.000		0.000		0.000
	0.000		0.000		0.000
	0.000		0.000		0.000

Steady State Relay Margins (measured from inner blinder)

Relay Location	Manuf/Type	PSS Model	South	North	Em North
1) B10T-Tioga (South)	GE OST	SLLP	335%	N/A	N/A
2) -Tioga (North)	GE OST	SLLP	689%	N/A	N/A
3) -Tioga (Em North)	GE OST	SLLP		N/A	N/A
4) D602F-Dorsey	ATP ???	SLINOS	710%	N/A	N/A
5) -Forbes (Normal)	ATP ???	SLINOS	460%	N/A	N/A
6) -Forbes (Em Nrth)	APT S-PRO	SLINOS		N/A	N/A
8) F3M-Intl Falls	APT S-PRO	SLINOS	332%	N/A	N/A
9) G82R-Rugby	APT	SLINOS	N/A	445%	
10) L20D-Drayton (Normal)	APT, ASEA	SLINOS	1703%	N/A	N/A
11) -Drayton (Em Nrth)	ASEA RXZF2	SLINOS		N/A	N/A
12) R50M-Moranville (Norm)	APT, West	SLINOS	1299%	N/A	N/A
13) -Moranville (Em N)	ASEA RXZF2	SLINOS		N/A	N/A

Appendix B.3: Summary for Case a12-sp11aa.sav (Without GI-0616 & GI-0707A, Without GI-0619)

```
INITIATED AT LOAD FLOW ENTRY POINT ON MON, JAN 12 2009  15:41

A12-SP11AA.SAV;SUMMER;PK LD;SYSTEM INTACT           :
ND=1029,MH=1304,MW=797,OHMH=0,OHMP=151,EWTW=-119,BD=166


                    P O W E R   F L O W   S U M M A R Y
-------------------------------------------------------------------------------
               NDEX:      1029 MW         ECL-ARP:  335 MW
               MHEX:      1304 MW         PRI-BYN:  150 MW
               MWEX:       797 MW         AHD-SLK:  292 MW
               KING-ECL:   505 MW         SLK-GPK:  174 MW
               COOPER S:   339 MW         WNE-WKS:  340 MW
               FTCAL S:    231 MW         GGS:     1505 MW
               GRIS-LNC:   373 MW         QC WEST:  786 MW

           LOAD LEVELS AS PERCENT OF 2011 SUMMER PEAK:
           NORTH DAKOTA (ZONE 90,990) 3743.0 MW, 111.4% OF  3360.2 MW
           NSP             (AREA 600) ****** MW, 100.1% OF  11140.0 MW
           MAN HYDRO       (AREA 667) 3043.5 MW, 100.0% OF  3043.0 MW

Load/Losses   MW  / MW       Generation        MW       Export            MW
----------- ------ -----     --------------- ------     --------------- ------
Manitoba      3043/ 265      MH total gross    4780     ATC West Import    742
Ont. total   23241/ 566         Wpg River       534     ATC SW Import      795
     NW          0/   0         7 Sisters       165     ATC SE Import     -583
Sask.         3084/ 103      OH total gross   23418     East Bias          263
MP            2162/ 189         northwest         0     SPC>WAPA (B10T)    166
NSP          11146/ 398      SPC total gross   3189     MH>SPC  (3-230)    228
N. Dakota     3743/ 320      MP total gross    2241     MH>SPC  (FALLS)    -63
Manitoba       707 MVARS     ND Cfd AC gross   3114     OH>MH  @Kenora       0
Ont. total   13541 MVARS              net      2943     OH>MP  @Ft Fran    151
     NW          0 MVARS     NSP East gross    3013     OH E>W @Wawa      -119
Sask.          725 MVARS              net      2873     OH>East USA          0
MP           10359 MVARS         West gross    2931     F601C  @Forbes     877
NSP           1882 MVARS              net      2769     D602F  @Dorsey    1152
N. Dakota      792 MVARS         Total net    10071     L20D   @Letell     156
ATC          15130/ 399      WAPA SD Hydro     1594     R50M   @Richer      97
ATC           4585 MVARS     Pleasant Valley    422     G82R   @Glenboro  -101
                             LGS/Trimont        264
                             SW MN Wind         686
                             N DAK WIND         734
                             Swing Bus         1924


Tfmrs          MVA/ Load     Ph Shifters  Deg/  MW      DC Lines          MW
------------- ---- -----     ------------ --- -----     --------------- ------
Wshell #1 7-7   43/  29%     Stinson        0/  109     CU (1,2)         1074
Wshell #2 7-7   43/  29%     Boundary Dam  41/  166     SQ BU (3,4)       400
Drayton#1 4-7   17/  12%     Whiteshell   -29/    0     MH Bipole 1      1406
Drayton#2 4-7   21/  11%     Int Falls    -28/  150     MH Bipole 2      1592
Dorsey #1 2-4  540/  45%     St. Lawrence  17/    0     MH (BP1+BP2)     2998
Dorsey #2 2-4  632/  52%     Arrowhead      0/  292     Miles City E>W   -149
Forbes    2-4  129/  19%                                 RCDC (15)        -199
Stone Lk  3-5  116/  38%                                 Stegall (10)        0

Dorsey SC's       I/S  MVAR  Qmax/ Qmin    SVC's              MVAR  Qmax/ Qmin
----------------- --- -----  ---- -----    ---------------- -----  ---- -----
MIL 7-9G     17.0  2    349   600/ -330    Forbes        500    45   400/ -450
SCE 1-3G     18.2  3    285   480/ -240    Fargo        13.2    13    20/ -135
SCA 4-6G     18.2  3    285   480/ -240    Watertown    20.0    16   125/  -86
                        -----  ---- -----
       Total            919  1560/ -810    Series Caps       Num In Serv
       Margin           641                ---------------- -----------
                                           Roseau        500   2 of 2
                                           Chisago       500   1 of 1
```

Caps/Reactors	MVAR	Caps/Reactors	MVAR	Caps/Reactors	MVAR
Balta (FS) 230	60	Arrowhead 230	120	Chisago T 9 34.5	25
Drayton 115	40	Blackberry 230	47	Chisago T 10 34.5	25
Drayton 13.8	0	Minntac 115	45	Forbes 230	0
Eau Claire(FS) 161	267	Riverton 230	47	Forbes 500	300
Kohlman Lake 115	240	Roseau Co.(FS) 230	30		0
Parkers Lk(FS) 115	0	Running (FS) 230	30	Fargo 115	81
Prairie (FS) 115	120	Running react 230	-20	Watertown 20	20
Ramsey (FS) 230	0	Shannon 230	0	Watertown 230	76
Red Rock 115	240		0		0
Rugby 13.8	-25	Glenboro 230	0	Arrowhead 345	0
Split Rock(FS) 115	0	Laverendrye 110	98	Stone Lake 345	0
Sheyenne (FS) 115	160	Richer react 230	0	Stone Lk Reac 345	0
Wilton/Bemidji 115	20	St Vital 110	98	Stone Lake 161	0
	0		0	Grdnr Pk Reac 345	0
	0		0	Grdnr Pk Caps 115	0
	0		0	Arpin Caps 138	50
	0		0	Council Creek 138	16

Bus Voltages	V,pu	Bus Voltages	V,pu	Bus Voltages	V,kV
Adams 345	1.017	Arrowhead 230	1.024	Whiteshell 110	119.1
Alexandria 115	1.016	Badoura 115	0.995	Kenora 220	249.0
Audubon 115	1.001	Blackberry 230	1.028	Dryden 220	252.5
Bemidji 115	1.009	Boise Cascade 13.8	1.028	Fort Frances 220	252.2
Byron 345	1.029	Boise Cascade 115	1.017	Mackenzie 220	253.6
Chisago Co. 345	1.034	ETCO 115	1.019	Lakehead 220	239.7
Chisago Co. 500	1.034	Forbes 230	1.032	Marathon 220	240.8
Drayton 230	1.023	Forbes 500	1.035	Wawa 220	238.2
Eau Claire 345	1.032	Hubbard 115	0.000	Mississagi 220	242.9
WEST FARIBAULT 115	1.017	Intl Falls 115	1.019	Fort Frances 118	120.3
LaPorte 115	0.995	Minntac 115	1.025	Lakehead 118	124.2
Maple River 230	1.012	Moranville 230	1.024	Birch 118	120.4
Marshall Tap 115	1.014	Riverton 230	1.009	Marathon 118	125.6
Owatonna 161	0.996	Running 230	1.020		0.000
Prairie 115	1.034	Shannon 230	1.024	Arrowhead 345	1.040
Prairie 230	1.019	Stinson MN 115	1.017	Stone Lake 345	1.044
Ramsey 230	0.994	Jamestown 345	0.952	Stone Lake 161	1.036
Roseau County 230	1.026	Groton 345	1.015	Gardner Park 345	1.020
Roseau County 500	1.037	Watertown 230	1.030	Weston 115	1.031
Sheyenne 230	1.015	Watertown 345	1.024	Arpin 345	1.023
Thief R Falls 115	1.008		0.000	Eau Claire 161	1.023
Tioga 230	1.032	Dorsey 230	1.045	Council Creek 161	0.936
Wahpeton 230	0.985	Dorsey 500	1.009	Hydro Lane 161	1.001
Winger 115	1.026		0.000	Wien 115	1.033
	0.000		0.000		0.000
	0.000		0.000		0.000
	0.000		0.000		0.000

Steady State Relay Margins (measured from inner blinder)

Relay Location	Manuf/Type	PSS Model	South	North	Em North
1) B10T-Tioga (South)	GE OST	SLLP	334%	N/A	N/A
2) -Tioga (North)	GE OST	SLLP	688%	N/A	N/A
3) -Tioga (Em North)	GE OST	SLLP		N/A	N/A
4) D602F-Dorsey	ATP ???	SLINOS	763%	N/A	N/A
5) -Forbes (Normal)	ATP ???	SLINOS	498%	N/A	N/A
6) -Forbes (Em Nrth)	APT S-PRO	SLINOS		N/A	N/A
8) F3M-Intl Falls	APT S-PRO	SLINOS	327%	N/A	N/A
9) G82R-Rugby	APT	SLINOS	N/A	580%	
10) L20D-Drayton (Normal)	APT, ASEA	SLINOS	1431%	N/A	N/A
11) -Drayton (Em Nrth)	ASEA RXZF2	SLINOS		N/A	N/A
12) R50M-Moranville (Norm)	APT, West	SLINOS	1390%	N/A	N/A
13) -Moranville (Em N)	ASEA RXZF2	SLINOS		N/A	N/A

Appendix B.4: Summary for Case a14-sp11aa.sav (With GI-0616 & GI-0707A, Without GI-0619)

```
INITIATED AT LOAD FLOW ENTRY POINT ON MON, JAN 12 2009  15:42

A14-SP11AA.SAV;SUMMER;PK LD;SYSTEM INTACT           :
ND=1341,MH=1304,MW=851,OHMH=0,OHMP=150,EWTW=-120,BD=167


                    P O W E R   F L O W   S U M M A R Y
-------------------------------------------------------------------------------
               NDEX:      1341 MW         ECL-ARP:  368 MW
               MHEX:      1304 MW         PRI-BYN:  186 MW
               MWEX:       851 MW         AHD-SLK:  312 MW
               KING-ECL:   539 MW         SLK-GPK:  197 MW
               COOPER S:   401 MW         WNE-WKS:  356 MW
               FTCAL S:    266 MW         GGS:     1518 MW
               GRIS-LNC:   401 MW         QC WEST:  756 MW

           LOAD LEVELS AS PERCENT OF 2011 SUMMER PEAK:
           NORTH DAKOTA (ZONE 90,990) 3743.0 MW, 111.4% OF  3360.2 MW
           NSP             (AREA 600) ****** MW, 100.1% OF  11140.0 MW
           MAN HYDRO       (AREA 667) 3043.5 MW, 100.0% OF  3043.0 MW

Load/Losses   MW  / MW       Generation        MW       Export            MW
----------- ------ -----     --------------- ------     --------------- ------
Manitoba      3043/ 264      MH total gross    4780     ATC West Import    811
Ont. total   23241/ 566         Wpg River       534     ATC SW Import      781
     NW          0/   0         7 Sisters       165     ATC SE Import     -631
Sask.         3084/ 103      OH total gross   23418     East Bias          289
MP            2162/ 192         northwest         0     SPC>WAPA (B10T)    167
NSP          11146/ 412      SPC total gross   3189     MH>SPC  (3-230)    229
N. Dakota     3743/ 343      MP total gross    2241     MH>SPC  (FALLS)    -63
Manitoba       707 MVARS     ND Cfd AC gross   3114     OH>MH  @Kenora       0
Ont. total   13541 MVARS              net      2943     OH>MP  @Ft Fran    150
     NW          0 MVARS     NSP East gross    3013     OH E>W @Wawa      -120
Sask.          725 MVARS              net      2873     OH>East USA          0
MP           10354 MVARS         West gross    2931     F601C  @Forbes     909
NSP           1882 MVARS              net      2769     D602F  @Dorsey    1178
N. Dakota      792 MVARS         Total net    10071     L20D   @Letell     144
ATC          15130/ 399      WAPA SD Hydro     1594     R50M   @Richer     100
ATC           4585 MVARS     Pleasant Valley    422     G82R   @Glenboro  -118
                             LGS/Trimont        264
                             SW MN Wind         686
                             N DAK WIND         734
                             Swing Bus         2031


Tfmrs          MVA/ Load     Ph Shifters  Deg/  MW      DC Lines          MW
------------- ---- -----     ------------ --- -----     --------------- ------
Wshell #1 7-7   43/  29%     Stinson        0/  110     CU (1,2)         1075
Wshell #2 7-7   43/  29%     Boundary Dam  45/  167     SQ BU (3,4)       399
Drayton#1 4-7   15/  11%     Whiteshell   -23/    0     MH Bipole 1      1406
Drayton#2 4-7   20/  10%     Int Falls    -23/  149     MH Bipole 2      1592
Dorsey #1 2-4  551/  45%     St. Lawrence  17/    0     MH (BP1+BP2)     2998
Dorsey #2 2-4  642/  53%     Arrowhead      0/  312     Miles City E>W   -149
Forbes    2-4  125/  18%                                 RCDC (15)        -199
Stone Lk  3-5  114/  38%                                 Stegall (10)        0

Dorsey SC's       I/S  MVAR  Qmax/ Qmin    SVC's              MVAR  Qmax/ Qmin
----------------- --- -----  ---- -----    ---------------- -----  ---- -----
MIL 7-9G     17.0  2    364   600/ -330    Forbes        500     4   400/ -450
SCE 1-3G     18.2  3    297   480/ -240    Fargo        13.2    15    20/ -135
SCA 4-6G     18.2  3    297   480/ -240    Watertown    20.0    58   125/  -86
                        -----  ---- -----
       Total            958  1560/ -810    Series Caps       Num In Serv
       Margin           602                ---------------- -----------
                                           Roseau        500   2 of 2
                                           Chisago       500   1 of 1
```

Caps/Reactors	MVAR	Caps/Reactors	MVAR	Caps/Reactors	MVAR
Balta (FS) 230	60	Arrowhead 230	120	Chisago T 9 34.5	25
Drayton 115	40	Blackberry 230	47	Chisago T 10 34.5	25
Drayton 13.8	0	Minntac 115	45	Forbes 230	0
Eau Claire(FS) 161	267	Riverton 230	47	Forbes 500	300
Kohlman Lake 115	240	Roseau Co.(FS) 230	30		0
Parkers Lk(FS) 115	0	Running (FS) 230	30	Fargo 115	81
Prairie (FS) 115	120	Running react 230	-20	Watertown 20	20
Ramsey (FS) 230	0	Shannon 230	0	Watertown 230	76
Red Rock 115	240		0		0
Rugby 13.8	-25	Glenboro 230	0	Arrowhead 345	0
Split Rock(FS) 115	0	Laverendrye 110	98	Stone Lake 345	0
Sheyenne (FS) 115	200	Richer react 230	0	Stone Lk Reac 345	0
Wilton/Bemidji 115	20	St Vital 110	98	Stone Lake 161	0
	0		0	Grdnr Pk Reac 345	0
	0		0	Grdnr Pk Caps 115	0
	0		0	Arpin Caps 138	50
	0		0	Council Creek 138	16

Bus Voltages	V,pu	Bus Voltages	V,pu	Bus Voltages	V,kV
Adams 345	1.017	Arrowhead 230	1.020	Whiteshell 110	119.1
Alexandria 115	1.029	Badoura 115	0.993	Kenora 220	249.0
Audubon 115	1.000	Blackberry 230	1.025	Dryden 220	252.5
Bemidji 115	1.008	Boise Cascade 13.8	1.027	Fort Frances 220	252.2
Byron 345	1.029	Boise Cascade 115	1.017	Mackenzie 220	253.6
Chisago Co. 345	1.031	ETCO 115	1.016	Lakehead 220	239.7
Chisago Co. 500	1.030	Forbes 230	1.027	Marathon 220	240.8
Drayton 230	1.020	Forbes 500	1.028	Wawa 220	238.1
Eau Claire 345	1.030	Hubbard 115	0.000	Mississagi 220	242.9
WEST FARIBAULT 115	1.016	Intl Falls 115	1.018	Fort Frances 118	120.3
LaPorte 115	0.994	Minntac 115	1.024	Lakehead 118	124.2
Maple River 230	1.012	Moranville 230	1.022	Birch 118	120.4
Marshall Tap 115	1.013	Riverton 230	1.007	Marathon 118	125.6
Owatonna 161	0.996	Running 230	1.018		0.000
Prairie 115	1.028	Shannon 230	1.022	Arrowhead 345	1.035
Prairie 230	1.013	Stinson MN 115	1.013	Stone Lake 345	1.040
Ramsey 230	0.986	Jamestown 345	0.947	Stone Lake 161	1.032
Roseau County 230	1.024	Groton 345	1.008	Gardner Park 345	1.020
Roseau County 500	1.036	Watertown 230	1.030	Weston 115	1.031
Sheyenne 230	1.016	Watertown 345	1.022	Arpin 345	1.022
Thief R Falls 115	1.004		0.000	Eau Claire 161	1.023
Tioga 230	1.031	Dorsey 230	1.045	Council Creek 161	0.935
Wahpeton 230	0.981	Dorsey 500	1.008	Hydro Lane 161	1.000
Winger 115	1.023		0.000	Wien 115	1.033
	0.000		0.000		0.000
	0.000		0.000		0.000
	0.000		0.000		0.000

Steady State Relay Margins (measured from inner blinder)

Relay Location	Manuf/Type	PSS Model	South	North	Em North
1) B10T-Tioga (South)	GE OST	SLLP	332%	N/A	N/A
2) -Tioga (North)	GE OST	SLLP	683%	N/A	N/A
3) -Tioga (Em North)	GE OST	SLLP		N/A	N/A
4) D602F-Dorsey	ATP ???	SLINOS	734%	N/A	N/A
5) -Forbes (Normal)	ATP ???	SLINOS	476%	N/A	N/A
6) -Forbes (Em Nrth)	APT S-PRO	SLINOS		N/A	N/A
8) F3M-Intl Falls	APT S-PRO	SLINOS	330%	N/A	N/A
9) G82R-Rugby	APT	SLINOS	N/A	482%	
10) L20D-Drayton (Normal)	APT, ASEA	SLINOS	1555%	N/A	N/A
11) -Drayton (Em Nrth)	ASEA RXZF2	SLINOS		N/A	N/A
12) R50M-Moranville (Norm)	APT, West	SLINOS	1338%	N/A	N/A
13) -Moranville (Em N)	ASEA RXZF2	SLINOS		N/A	N/A

APPENDIX C – DATA FILES FOR STEADY-STATE ANALYSIS

Appendix C.1: Subsystem Description Data File (File GI-0616.sub)

```
COM *** SUBSYSTEM DESCRIPTION FILE FOR GI-0616 & GI-0707A SYSTEM IMPACT STUDY ***

SYSTEM NORTHMAPP_HV
 JOIN 'GROUP 1'
  AREA 667
  KVRANGE 110 500
 END
 JOIN 'GROUP 2'
  AREAS 600 610
  KVRANGE 110 500
 END
  JOIN 'GROUP 3'
   AREAS 618 626
   KVRANGE 110 500
 END
 JOIN 'GROUP 4'
  AREA 652
  KVRANGE 110 500
 END
END

SYSTEM MP_HV
 JOIN 'GROUP 1'
  AREA 608
  KVRANGE 110 500
 END
END

SYSTEM MP_WESTDIV
 JOIN 'GROUP 1'
  AREA 610
  KVRANGE 110 500
 END
END

SYSTEM OTP_345_230
 JOIN 'GROUP 1'
  AREA 626
  KVRANGE 230 345
 END
END

SYSTEM OTP_115
 JOIN 'GROUP 1'
  AREA 626
  KVRANGE 110 115
 END
END

SUBSYSTEM GI-0616_POI
 BUS 67616
END

COM SUBSYSTEM MAIN
COM  AREAS 101 360
COM  SCALE ALL GENERATION

END
```

Appendix C.2: Monitored Element Data File (File GI-0616.mon)

```
COM *** MONITORED ELEMENT FILE FOR GI-0616 & GI-0707A SYSTEM IMPACT STUDY ***

MONITOR BRANCHES IN SYSTEM NORTHMAPP_HV
MONITOR TIES FROM SYSTEM NORTHMAPP_HV

COM FOR SYSTEM INTACT ANALYSIS, USE THE FOLLOWING VOLTAGE CRITERIA:
COM MONITOR VOLTAGE RANGE SYSTEM NORTHMAPP_HV 0.95 1.05
COM MONITOR VOLTAGE RANGE SYSTEM MP_HV        1.00 1.05
COM MONITOR VOLTAGE RANGE SYSTEM MP_WESTDIV   0.96 1.05
COM MONITOR VOLTAGE RANGE SYSTEM OTP_345_230  0.97 1.05
COM MONITOR VOLTAGE RANGE SYSTEM OTP_115      0.97 1.07

COM FOR CONTINGENCY ANALYSIS, USE THE FOLLOWING VOLTAGE CRITERIA:
MONITOR VOLTAGE RANGE SYSTEM NORTHMAPP_HV 0.90 1.10
MONITOR VOLTAGE RANGE SYSTEM MP_HV        0.95 1.05
MONITOR VOLTAGE RANGE SYSTEM MP_WESTDIV   0.92 1.05
MONITOR VOLTAGE RANGE SYSTEM OTP_345_230  0.92 1.10
MONITOR VOLTAGE RANGE SYSTEM OTP_115      0.92 1.10

END
```

Appendix C.3: Contingency Description Data File (File GI-0616.con)

```
COM *** CONTINGENCY DESCRIPTION FILE FOR GI-0616 & GI-0707 SYSTEM IMPACT STUDY ***

COM 'DERIVED FROM CONTINGENCY FILE PROVIDED WITH MAPP 2002 SERIES LF CASES     '
COM 'MODIFIED 12/17/2006 BY ABB FOR COMPATIBILITY WITH MAPP 2006 SERIES CASES  '
COM 'MODIFIED 06/25/2008 BY ABB FOR COMPATIBILITY WITH pkg2008-05-05-2008 SERIES CASES  '

SINGLE BRANCH IN SUBSYSTEM 'NORTHMAPP_HV'
SINGLE TIE FROM SUBSYSTEM 'NORTHMAPP_HV'

COM ' '
COM ' DELYN HELM ADDED ADAMS MULTIPLE CONTINGENCIES, ONLY WORKS '
COM ' WITH MODEL CHANGE OF ADDING TWO 161KV BUSES AT ADAMS SUM.'
COM ' NAME OF IDEV THAT MAKES THIS MODEL CHANGE IS ../idv/i-split-adams.idv'
COM '  '
COM
COM '  COMPLETED UPDATING ON 8-02-01, LOREN '
COM ' '
COM '   Current MAPP Contingency File 2002 Winter'
COM ' '
COM '    DC Reductions Not Shown, commented out, to be modified'
COM '    according to model used  and when needed by study group(s).'
COM ' '
COM ' ** The DC runback figures are not up to date, they'
COM '    reflect conditions modeled in the winter model'
COM ' '
COM ' Flow at 67557 to 66752 is  xxx.x MW' Letelier - Drayton
COM ' Flow at 67576 to 60175 is   xx.x MW' Richer - Roseau
COM ' Flow at 67564 to 60173 is  xxx.x MW' Dorsey - Riel
COM ' Flow at 60198 to 60197 is  xxx.x MW, Chisago N-Chisago'
COM ' Flow at 60101 to 60198 is  xxx.x MW, Chisago-Forbes 500kV'
COM ' Flow at 60197 to 61494 is  xxx.x MW, Chisago xfr D27'
COM ' Flow at 60197 to 61493 is  xxx.x MW, Chisago xfr D17'
COM ' '
COM ' '
COM ' '
COM ' Change load on bus  67503 dorsey from zero for DC trip'
COM ' Cannot change gen on a swing bus at kettle 67683 per PTI'
COM ' '
COM ' '
COM '           All 500 kV DC reduction responses are'
COM '           based on the flow from the Dorsey bus 67564.'
COM '           No other bus flow should be used when simulating'
COM '           a trip that OPENS any 500 kV line section(s).'
COM ' '
COM ' '
COM ' '
COM ' '
COM ' REVIEWED BY XCEL ENERGY 7/2002'
COM ' 009 Defined as multi-circuit, tower'
COM ' Both 63030-60270-60233 and 63030-60202 must trip for the Coal'
COM ' Creek to Dickinson DC line to trip.  The DC will'
COM ' carry 1000 MW if only one of these lines trip'
COM ' SET BUS 63000 AND 63001 = PGEN + PLOAD = xxx.0 and xxx.0'
COM ' SET BUS 63041 AND 63030 ALWAYS ZERO FOR DC TRIP'
COM 'A 60160-60272 SHERCO 3-MPLEGV23 CKT 1   OPENS  C or D or E tower, MTL B,H,I,J'
COM 'B 60272-60202 MPLEGV23-COON CK3 CKT 1   OPENS  E or G tower, MTL A,H,I,J'
COM 'C 60151-60160 MNTCELO3-SHERCO 3 CKT 1   OPENS  A  tower'
COM 'D 60151-60114 MNTCELO3-ELM CRK3 CKT 1   OPENS  A  R of W,  tower'
COM 'E 60114-60233 ELM CRK3-PARKERS3 CKT 1   OPENS  A or F,  R of W, tower'
COM 'F 63030-60270 DICKNSN3-MPLEGV13 CKT 1   OPENS  E or G  tower, F G trip DC line'
COM 'F 60270-60233 MPLEGV13-PARKERS3 CKT 1   OPENS  with F'
COM 'G 63030-60202 DICKNSN3-COON CK3 CKT 1   OPENS  B or F  tower, F G trip DC line'
COM '   Muti-circuit outage of transformer with Dummy Bus and dummy ownership bus'
COM 'A 60160-60272 SHERCO 3-MPLEGV23 CKT 1   OPENS  B,H,I,J  MTL'
COM 'H 60202-61488 COON CK3-CNCMID1Y CKT 1   OPENS  A,B,I,J  MTL'
COM 'I 60203-61488 COON CK7-CNCMID1Y CKT 1   OPENS  A,B,H,J  MTL'
COM 'J 60656-61488 CNCTER19-CNCMID1Y CKT 1   OPENS  A,B,H,I  MTL'
COM 'B 60272-60202 MPLEGV23-COON CK3 CKT 1   OPENS  A,H,I,J  MTL'
```

```
COM '-------------------------------------------------------------'
CONTINGENCY '009   1'
COM 'Tower A with C and, B,H,I,J multi-terminal response'
TRIP LINE FROM BUS 60160 TO BUS 60272 CKT 1
TRIP LINE FROM BUS 60272 TO BUS 60202 CKT 1
TRIP LINE FROM BUS 60151 TO BUS 60160 CKT 1
TRIP LINE FROM BUS 60202 TO BUS 61488 CKT 9
TRIP LINE FROM BUS 61488 TO BUS 60203 CKT 9
TRIP LINE FROM BUS 61488 TO BUS 60656 CKT 9
END
CONTINGENCY '009   2'
COM 'Tower A with D with E and, B,H,I,J multi-terminal response'
TRIP LINE FROM BUS 60160 TO BUS 60272 CKT 1
TRIP LINE FROM BUS 60272 TO BUS 60202 CKT 1
TRIP LINE FROM BUS 60151 TO BUS 60114 CKT 1
TRIP LINE FROM BUS 60202 TO BUS 61488 CKT 9
TRIP LINE FROM BUS 61488 TO BUS 60203 CKT 9
TRIP LINE FROM BUS 61488 TO BUS 60656 CKT 9
END
CONTINGENCY '009   4'
COM 'Tower G with B and, A,H,I,J multi-terminal response'
TRIP LINE FROM BUS 60160 TO BUS 60272 CKT 1
TRIP LINE FROM BUS 60272 TO BUS 60202 CKT 1
TRIP LINE FROM BUS 63030 TO BUS 60202 CKT 1
TRIP LINE FROM BUS 60202 TO BUS 61488 CKT 9
TRIP LINE FROM BUS 61488 TO BUS 60203 CKT 9
TRIP LINE FROM BUS 61488 TO BUS 60656 CKT 9
END
CONTINGENCY '009   5'
COM 'Tower DC with Elm Crk-Parkers'
TRIP LINE FROM BUS 60114 TO BUS 60233 CKT 1
TRIP LINE FROM BUS 63030 TO BUS 60270 CKT 1
TRIP LINE FROM BUS 60270 TO BUS 60233 CKT 1
END
CONTINGENCY '009   6'
COM 'Transformer multi-terminal outage, A,B,H,I,J'
TRIP LINE FROM BUS 60160 TO BUS 60272 CKT 1
TRIP LINE FROM BUS 60272 TO BUS 60202 CKT 1
TRIP LINE FROM BUS 60202 TO BUS 61488 CKT 9
TRIP LINE FROM BUS 61488 TO BUS 60203 CKT 9
TRIP LINE FROM BUS 61488 TO BUS 60656 CKT 9
END
CONTINGENCY '009   7'
COM 'Tower A with E and, multi-terminal response B,H,I,J'
TRIP LINE FROM BUS 60160 TO BUS 60272 CKT 1
TRIP LINE FROM BUS 60272 TO BUS 60202 CKT 1
TRIP LINE FROM BUS 60114 TO BUS 60233 CKT 1
TRIP LINE FROM BUS 60202 TO BUS 61488 CKT 9
TRIP LINE FROM BUS 61488 TO BUS 60203 CKT 9
TRIP LINE FROM BUS 61488 TO BUS 60656 CKT 9
END
CONTINGENCY '009   8'
COM 'Tower E with F with A and, responding multi-terminal B,H,I,J'
TRIP LINE FROM BUS 60114 TO BUS 60233 CKT 1
TRIP LINE FROM BUS 60160 TO BUS 60272 CKT 1
TRIP LINE FROM BUS 60272 TO BUS 60202 CKT 1
TRIP LINE FROM BUS 63030 TO BUS 60202 CKT 1
TRIP LINE FROM BUS 60202 TO BUS 61488 CKT 9
TRIP LINE FROM BUS 61488 TO BUS 60203 CKT 9
TRIP LINE FROM BUS 61488 TO BUS 60656 CKT 9
END
COM ' '
COM ' 015 Defined as multi-terminal and multi-circuit'
COM ' This multi-terminal/circuit outage consists of three'
COM ' parts.  All of the multi-terminal/circuit outages listed'
COM ' in outage 63336 are valid and will trip regardless'
COM ' of any base flow.  However, if certain base flows'
COM ' are at levels as outlined below and flows are south'
COM ' the multi-terminal/circuit outage will also cause a:'
COM ' '
COM '     100% DC runback for MTL outage of the Dorsey-Roseau-Forbes'
```

```
COM '     500kV line as measured at the 67564 Dorsey bus.'
COM ' '
COM '     40% to 100% DC runback, depending on the base flow on'
COM '     the Forbes-Chisago 500kV line, for the outage of'
COM '     Forbes-Chisago 500kV line as measured at the Dorsey'
COM '     bus 67564.'
COM ' '
COM ' Also, loss of one or both series capacitors at'
COM ' Roseau can cause either a 13% or 26% DC reduction.'
COM ' respectively, regardless of base flows, as measured at'
COM ' the Dorsey bus 67564.'
COM ' '
COM ' '
COM ' On the south end of the Dorsey-Roseau-Forbes-Chisago 500 kV'
COM ' line A DC reduction may be required for the trip of'
COM ' Chisago-Forbes 500 kV line section.  If the base flow'
COM ' on Chisago-Forbes 345 kV line is 350 to 550 MW'
COM ' there is a 40% DC reduction.  If the base flow on'
COM ' Chisago-Forbes 500 kV line is greater than 550 MW'
COM ' there is a 100% DC reduction.  As measured at the'
COM ' Dorsey bus.'
COM ' '
COM ' On the South end of the Dorsey-Roseau-Forbes-Chisago 500 kV'
COM ' line Loss of BOTH  Chisago County Transfomers will in turn'
COM ' cause a multi-circuit loss of the Chisago-Forbes'
COM ' 500 kV line.  Since the south end of the 500 kV line'
COM ' is opened, a 40% DC reduction is be required if flows'
COM ' are 350 to 550 MW and a 100% reduction if flows are greater.'
COM ' than 550 MW on the Chisago-Forbes 500 kV line - as measured'
COM ' at the Dorsey bus.  A 100% reduction required since a cross'
COM ' trip of the north end of the 500 kV line will take place'
COM ' if the flow on the south end is 550 MW or greater.'
COM ' '
COM ' If the flow on Chisago-Forbes 500 kV line is less than'
COM ' 350 MW (419 MW), no DC reduction is required for the Chisago'
COM ' to Forbes 500 kV line trip.'
COM ' '
COM ' See Outage  905 PARTS 2 and 7 below.'
COM ' '
COM ' '
COM ' '
COM ' Part 1, North end of the 500 kV Line, Forbes north to Dorsey'
COM ' Part 1 Can trip regardless of base flows.'
COM ' '
COM ' At the north end of the 500 kV line, Forbes north to Dorsey,'
COM ' The following is a valid Transformer multi-terminal line trip'
COM ' which in turn OPENS the 500 kV line between Roseau-Forbes-Chisago.'
COM ' A DC reduction of 100%, as measured at the Dorsey bus, (Dorsey Sub)'
COM ' is required for loss of the Forbes-Roseau 500 kV line section'
COM ' in the 1998 winter transfer study, excluding reduction for'
COM ' capacitor bank(s).'
COM ' '
COM ' PART 1 simulates the trip of the Forbes 500/230 kV'
COM ' transformer 1 or 2 which open ends the Roseau-Forbes-Chisago'
COM ' 500 kV line which in turn requires a 100% DC reduction, as'
COM ' measured at the Dorsey 67564 bus, in 1998'
COM ' winter study.'
COM ' '
COM 'A 60101-61550 FORBES 2-FORB1JCT  CKT 1   OPENS  B C D E F G H I J K'
COM 'B 61550-61624 FORB1JCT-FORBES 4  CKT 1   OPENS  A C D E F G H I J K'
COM 'C 61550-61551 FORB1JCT-FORB1TRT  CKT 1   OPENS  A B D E F G H I J K'
COM ' '
COM 'D 60101-61552 FORBES 2-FORB2JCT  CKT 2   OPENS  A B C E F G H I J K'
COM 'E 61552-61624 FORB2JCT-FORBES 4  CKT 2   OPENS  A B C D F G H I J K'
COM 'F 61552-61553 FORB2JCT-FORB2TRT  CKT 2   OPENS  A B C D E G H I J K'
COM ' '
COM 'G 60101-60198 FORBES 2-CHIS-N 2  CKT 1'
COM 'H 60101-60174 FORBES 2-ROSEAUS2'
COM 'I 67564-60173 DORSEY 5-ROSEAUN2  CKT 1(cap banks modeled here)'
COM  J 60173-60174 ROSEAUN2-ROSEAUS2  CKT 1'
COM 'K 60174-60101 ROSEAUS2-FORBES 2  CKT 1'
```

```
COM ' '
COM ' '
COM ' PART 2 - Southern End of the 500 kV line'
COM ' Part 2 Can trip regardless of base flows.'
COM ' '
COM ' The following is a valid multi-circuit trip '
COM ' with flows south and with the exception that'
COM ' IF FLOW ON FORBES-CHISAGO IS LESS THAN 350 MW, NO DC TRIP'
COM ' IF FLOW ON THE FORBES-CHISAGO IS 350 TO 550 MW, 40% DC RED'
COM ' IF FLOW ON THE FORBES-CHISAGO IS OVER 550 MW, 100% DC RED'
COM ' If flows are 550 MW or more on the south end of the 500 kV line'
COM ' A cross trip of the north end of the 500 kV line will'
COM ' occur when the south end is tripped.'
COM ' '
COM ' Base flow on 60101-60198 = 419,  40% DC reduction '
COM ' required for the 1998 winter transfer study.'
COM '
COM ' Also,'
COM ' When the series capacitors (both cap banks) are bypassed'
COM ' at Roseau a 26% DC reduction is required as measured at'
COM ' Dorsey bus 67564. If only one cap bank is bypassed'
COM ' then there is a 13% reduction.  Both banks will be'
COM ' bypassed in part 2 for the 1998 winter study'
COM ' '
COM ' There will be a minimum of 26%, 40% OR 100% DC reduction'
COM ' simulated depending on base case conditions as noted'
COM ' above in the 1998 winter study. See Part 2 outage below.'
COM ' '
COM 'C 60101-60198 FORBES 2-CHIS-N 2  CKT 1'
COM 'E 60197-60198 CHIS CO2-CHIS-N 2  CKT 1'
COM ' '
COM ' '
COM ' PART 3 North end of the 500kV Line'
COM ' PART 3 Trips regardless of base flows'
COM ' '
COM ' PART 3 Simulates the 500 kV line cross trip.'
COM ' With flows south the following outage simulates'
COM ' a multi-circuit cross trip where both Dorsey-Roseau'
COM ' 500 kV and Roseau-Forbes 500 kV lines trip together.'
COM ' With a cross trip from Dorsey to Forbes on the'
COM ' 500 kV line, a 100% DC reducion (570.0 MW) is'
COM ' required regardless of base case flows, See Part 1.'
COM ' Also,'
COM ' When the series capacitors (both cap banks) are bypassed'
COM ' at ROSEAU  a 26% DC reduction is required as measured'
COM ' at Dorsey bus 67564. If only one cap bank is bypassed'
COM ' then there is a 13% reduction.  Two banks will be'
COM ' bypassed in Part 4 in 903 for the 1998 winter study.
COM ' '
com ' '
COM 'F 67564-60173 DORSEY 5-ROSEAUN2 CKT 1(cap banks modeled here)'
COM  G 60173-60174 ROSEAUN2-ROSEAUS2 CKT 1'
COM 'H 60174-60101 ROSEAUS2-FORBES 2 CKT 1'
COM '-------------------------------------------------------'
COM ' 020 Defined as multi-terminal, both Chisago Transfomers tripped'
COM ' NO DC REDUCTION FOR SINGLE CHISAGO TRANSFORMER OUTAGE'
COM ' '
COM ' IF FLOW ON FORBES-CHISAGO-N  IS LESS THAN 350 MW, NO DC RED'
COM ' IF FLOW ON THE FORBES-CHISAGO IS 350 TO 550 MW, 40% DC RED'
COM ' IF FLOW ON THE FORBES-CHISAGO IS OVER 550 MW, 100% DC RED'
COM ' Simulates both Chisago Tranformers tripping and the'
COM ' Forbes-Chisago 500 kV response.'
COM ' Base flow on Forbes-Chisago = 419.0 MW, 40% DC reduction required'
COM ' '
COM 'A 60101-60198 FORBES 2-CHIS-N 2 CKT 1   OPENS B C'
COM 'B 60197-61493 CHIS CO2-CHIS D17 CKT 1   VLD SGL'
COM 'C 60197-61494 CHIS CO2-CHIS D27 CKT 1   mtl see outage 905, W X Y below'
COM '-------------------------------------------------------'
COM 'CONTINGENCY 022 '
COM 'REVIEWED BY XCEL ENERGY 7/2002'
COM ' 022  Defined as tower and multi-terminal combinations'
```

```
COM ' South end of the 500 kV line.'
COM ' '
COM ' Loss of both Chisago County transfomers will cause a'
COM ' multi-circuit loss of the Forbes-Chisago 500 kV line'
COM ' Since the 500 kV line is opened a DC reduction'
COM ' may be required, as measured at Dorsey bus 67564,'
COM ' if flows are 350 MW or higher on Forbes-Chisago'
COM ' 500 kV line.  The flow on Forbes-Chisago is less'
COM ' than 350 MW (419 MW) therefore, a DC reduction is '
COM ' required for the trip of both Chisago County transformers'
COM ' See PART 2 and 7 below.
COM ' '
COM ' A B C is tower only'
COM ' A B C Tower and multi-terminal combination are in part 1 below'
COM 'A 60202-60221 COON CK3-KOLMNLK3   OPENS  B  C tower and MTL'
COM 'B 60221-60251 KOLMNLK3-TERMINL3   OPENS  A  C tower and MTL'
COM 'C 60202-60251 COON CK3-TERMINL3   OPENS  A  B tower and MTL'
COM '**   Defined as multi-circuit, tower'
COM ' D E F is tower only'
COM 'Note: Both D and E must be opened for the Chisago transformers'
COM '      to open.  D and E alone do not open any Chisago transformer(s).'
COM ' D E F Tower and multi-terminal combination are in part 2 below'
COM 'D 60186-60199 AS KING3-CHIS CO3   OPENS  E  F tower'
COM 'E 60199-60221 CHIS CO3-KOLMNLK3   OPENS  D  F tower and MTL'
COM 'F 60186-60221 AS KING3-KOLMNLK3   OPENS  D  E tower'
COM '**    Defined as multi-terminal'
COM ' G and H are described in part 11 below'
COM 'G 60199-60221 CHIS CO3-KOLMNLK3       OPENS  H'
COM 'H 60221-60222 KOLMNLK3-KOLMNLK7 CKT 2 OPENS  G'
COM '**    Defined as multi-terminal'
COM ' I and J are described in part 9 below'
COM 'I 60202-60221 COON CK3-KOLMNLK3       OPENS  J'
COM 'J 60221-60222 KOLMNLK3-KOLMNLK7 CKT 1 OPENS  I'
COM '**    Defined as multi-terminal'
COM 'K and L are described in part 12 below'
COM 'K  60221-60251 KOLMNLK3-TERMINL3      OPENS  L1 L2 L3'
COM 'L1 60251-61492 TERMINL3-TERMID1Y      OPENS  K  L2 L3'
COM 'L2 61492-60252 TERMID1Y-TERMINL7      OPENS  K  L1 L3'
Com 'L3 61492-61187 TERMID1Y-TERTER19      OPENS  K  L1 L2'
COM '**    Defined as multi-terminal'
COM ' M and N are described in part 10 below'
COM 'M  60202-60251 COON CK3-TERMINL3      OPENS  N'
COM 'N1 60251-61491 TERMINL3-TERMID2Y      OPENS  M  N2 N3'
COM 'N2 61491-60252 TERMID2Y-TERMINL7      OPENS  M  N1 N3'
Com 'N3 61491-61188 TERMID2Y-TERTER29      OPENS  M  N1 N2'
COM '**    Defined as multi-terminal'
COM ' R S T are dexcribed in part 13 below'
COM 'R  60199-61493 CHIS CO3-CHIS D17     OPENS S T'
COM 'S  60653-61493 CHIS T19-CHIS D17     OPENS R T'
COM 'T  60197-61493 CHIS CO2-CHIS D17     OPENS R S'
COM '**    Defined as multi-circuit'
COM 'U  60197-60198 CHIS CO2-CHIS-N 2     OPENS V'
COM 'V  60198-60101 CHIS-N 2-FORBES 2     OPENS U AND MAY REDUCE DC'
COM '**    Defined as multi-terminal'
COM 'W X Y are dexcribed in part 14 below'
COM 'W  60197-61494 CHIS CO2-CHIS D27     OPENS X Y'
COM 'X  60199-61494 CHIS CO3-CHIS D27     OPENS W Y'
COM 'Y  60654-61494 CHIS T29-CHIS D27     OPENS X W'
COM ' NO DC REDUCTION ON ITEM 2 & 7 BELOW, IF FLOW IS'
COM ' LESS THAN 500 MW FORBES-CHISAGO. However there'
COM ' is a 26% reduction for bypassing the two capacitor'
COM ' banks at Forbes.'
COM ' 60101-60198 FLOW = 136.0 MW, REDUCE DC  0% FOR'
COM ' FLOW OUT OF BUS 67564 but,  reduce 26% for bypassing'
COM ' the Forbes capacitor bank.'
COM ' Will simulate worst case only, reduction of 81.0 MW'
COM '-----------------------------------------------------------'
CONTINGENCY '022 1'
COM 'Tower outage A B C and resulting multi-terminals'
TRIP LINE FROM BUS 60202 TO BUS 60221 CKT 1
TRIP LINE FROM BUS 60221 TO BUS 60251 CKT 1
```

```
TRIP LINE FROM BUS 60202 TO BUS 60251 CKT 1
COM 'Also trips the following because of A where'
COM 'A is the same as MTL I'
TRIP LINE FROM BUS 60221 TO BUS 60222 CKT 10
COM 'Also trips the following because of B where'
COM 'B is the same as MTL K'
TRIP LINE FROM BUS 60251 TO BUS 61492 CKT 10
TRIP LINE FROM BUS 61492 TO BUS 60252 CKT 10
TRIP LINE FROM BUS 61492 TO BUS 61187 CKT 10
COM 'Also trips the following because of C where'
COM 'C is the same as MTL M'
TRIP LINE FROM BUS 60251 TO BUS 61491 CKT 9
TRIP LINE FROM BUS 61491 TO BUS 60252 CKT 9
TRIP LINE FROM BUS 61491 TO BUS 61188 CKT 9
END
CONTINGENCY '022 3'
COM 'Tower outage and resulting multi-terminal'
COM '60202-60221 and 60202-60251 is the tower outage A,C'
TRIP LINE FROM BUS 60202 TO BUS 60221 CKT 1
TRIP LINE FROM BUS 60202 TO BUS 60251 CKT 1
COM 'Also trips the following because of A where'
COM 'A is the same as MTL I'
TRIP LINE FROM BUS 60221 TO BUS 60222 CKT 9
COM 'Also trips the following because of C where'
COM 'C is the same as MTL M'
TRIP LINE FROM BUS 60251 TO BUS 61491 CKT 9
TRIP LINE FROM BUS 61491 TO BUS 60252 CKT 9
TRIP LINE FROM BUS 61491 TO BUS 61188 CKT 9
END
CONTINGENCY '022 4'
COM 'Tower outage and resulting multi-terminal'
COM '60202-60221 and 60221-60251 is the tower outage, A,B'
TRIP LINE FROM BUS 60202 TO BUS 60221 CKT 1
TRIP LINE FROM BUS 60221 TO BUS 60251 CKT 1
COM 'Also trips the following because of A where'
COM 'A is the same as MTL I'
TRIP LINE FROM BUS 60221 TO BUS 60222 CKT 9
COM 'Also trips the following because of B where'
COM 'B is the same as MTL K'
TRIP LINE FROM BUS 60251 TO BUS 61492 CKT 10
TRIP LINE FROM BUS 61492 TO BUS 60252 CKT 10
TRIP LINE FROM BUS 61492 TO BUS 61187 CKT 10
END
CONTINGENCY '022 5'
COM 'Tower outage and resulting multi-terminal'
COM '60221-60251 and 60202-60251 is the tower outage B,C'
TRIP LINE FROM BUS 60221 TO BUS 60251 CKT 1
TRIP LINE FROM BUS 60202 TO BUS 60251 CKT 1
COM 'Also trips the following because of B where'
COM 'B is the same as MTL K'
TRIP LINE FROM BUS 60251 TO BUS 61492 CKT 10
TRIP LINE FROM BUS 61492 TO BUS 60252 CKT 10
TRIP LINE FROM BUS 61492 TO BUS 61187 CKT 10
COM 'Also trips the following because of C where'
COM 'C is the same as MTL M'
TRIP LINE FROM BUS 60251 TO BUS 61491 CKT 9
TRIP LINE FROM BUS 61491 TO BUS 60252 CKT 9
TRIP LINE FROM BUS 61491 TO BUS 61188 CKT 9
END
CONTINGENCY '022 6'
COM 'Tower outage and resulting multi-terminal'
COM '60186-60199 and 60186-60221 is the tower outage D,F'
TRIP LINE FROM BUS 60186 TO BUS 60199 CKT 1
TRIP LINE FROM BUS 60186 TO BUS 60221 CKT 1
END
CONTINGENCY '022 8'
COM 'Tower outage resulting in multi-terminal outage'
COM '60199-60221 and 60186-60221 is the tower outage E,F'
TRIP LINE FROM BUS 60186 TO BUS 60221 CKT 1
TRIP LINE FROM BUS 60199 TO BUS 60221 CKT 1
COM 'Also trips the following because of E where'
```

```
COM 'E is the same as MTL G'
TRIP LINE FROM BUS 60221 TO BUS 60222 CKT 10
END
CONTINGENCY '022 9'
COM 'Multi-terminal trip of I and J'
TRIP LINE FROM BUS 60202 TO BUS 60221 CKT 1
TRIP LINE FROM BUS 60221 TO BUS 60222 CKT 10
END
CONTINGENCY '022 10'
COM 'Multi-terminal trip of M and N'
TRIP LINE FROM BUS 60202 TO BUS 60251 CKT 1 /*Coon Crk to Terminal
TRIP LINE FROM BUS 60251 TO BUS 61491 CKT 9
TRIP LINE FROM BUS 61491 TO BUS 60252 CKT 9
TRIP LINE FROM BUS 61491 TO BUS 61188 CKT 9
END
CONTINGENCY '022 11'
COM 'Multi-terminal trip of G and H'
TRIP LINE FROM BUS 60199 TO BUS 60221 CKT 1
TRIP LINE FROM BUS 60221 TO BUS 60222 CKT 10
END
CONTINGENCY '022 12'
COM 'Multi-terminal trip of K and L'
TRIP LINE FROM BUS 60221 TO BUS 60251 CKT 1 /*Kholman Lk to Terminal
TRIP LINE FROM BUS 60251 TO BUS 61492 CKT 10
TRIP LINE FROM BUS 61492 TO BUS 60252 CKT 10
TRIP LINE FROM BUS 61492 TO BUS 61187 CKT 10
END
CONTINGENCY '022 13'
COM 'Multi-terminal trip of transformer R S and T'
COM 'represents a 3 winding transformer vld sgl'
COM 'Chisago Co. 500/345/34.5 kV transformer'
TRIP LINE FROM BUS 60199 TO BUS 61493 CKT 10
TRIP LINE FROM BUS 60653 TO BUS 61493 CKT 10
TRIP LINE FROM BUS 60197 TO BUS 61493 CKT 10
END
CONTINGENCY '022 14'
COM 'Multi-terminal trip of transformer W X and Y'
COM 'represents a 3 winding transformer vld sgl'
COM 'Chisago Co. 500/345/34.5 kV transformer'
TRIP LINE FROM BUS 60197 TO BUS 61494 CKT 9
TRIP LINE FROM BUS 60199 TO BUS 61494 CKT 9
TRIP LINE FROM BUS 60654 TO BUS 61494 CKT 9
END
COM ' '
COM ' '
COM ' SINGLES AND SINGLE PRIORS THAT REQUIRE D.C. RED'
COM ' '
COM '  End Of Outages That Cause DC or Unit runback'
COM ' '
COM ' '
COM ' '
COM ' '
COM ' '
COM ' '
COM ' START DAKOTA AREA CONTINGENCIES'
COM ' '
COM ' '
COM ' '
CONTINGENCY 'SINGLE-046'
COM  Center-Coyote 345 kV,
COM * IF MORE THAN 225 MW NET ON UNIT
COM * TRIP LINE AND UNIT
COM * CASE SHOWS 400 MW NET ON UNIT
COM 'TRIP LINE FROM BUS  66791 TO BUS  67316 CKT  1 GNRED'
COM 'TRIP UNIT      BUS  67316 TO BUS  67315 CKT  1'
TRIP LINE FROM BUS  66791 TO BUS  67316 CKT  1
TRIP LINE FROM BUS  67316 TO BUS  67315 CKT  1
END
COM '99 CROSS TRIP FOR TIOGA-LOGAN 230KV LINE OF THE TIOGA'
COM ' 115/230 TRANSFORMER.  NOT VALID UNTIL THE B10T FLOW'
COM ' TOWARD THE SOUTH IS OVER 100MW'
```

```
COM '-------------------------------------------------------'
CONTINGENCY '99'
TRIP LINE FROM BUS 67104 TO BUS 67108 CKT 1
TRIP LINE FROM BUS 67104 TO BUS 67385 CKT 1
END
COM '100  Defined as multi-terminal, wapa/otp'
COM 'A 66431-63267 DEVILSL7-DEVIL J7 CKT 1   OPENS  B C D
COM 'B 63267-63268 DEVIL J7-DEVIL S7 CKT 1   OPENS  A C D
COM 'C 63267-63265 DEVIL J7-DEVILSE7 CKT 1   OPENS  A B D
COM 'D 63265-63266 DEVILSE7-RAMSEY 7 CKT 1   OPENS  A B C
COM ' '
COM 'This outage will island out Sweetwater to'
COM 'Loma Jct to Langdon 115kV line sections'
COM 'Not shown in the outage.'
COM '-------------------------------------------------------'
CONTINGENCY '100'
TRIP LINE FROM BUS 66431 TO BUS 63267 CKT 1
TRIP LINE FROM BUS 63267 TO BUS 63268 CKT 1
TRIP LINE FROM BUS 63267 TO BUS 63265 CKT 1
TRIP LINE FROM BUS 63265 TO BUS 63266 CKT 1
END
COM '105  Defined as multi-circuit, tower'
COM 'A 66426-66441 BISMARK4-GARRISN4 CKT 1   OPENS   B or C  tower'
COM 'B 66426-66456 BISMARK4-WASHBRN4 CKT 1   OPENS   A tower, MTL 1 '
COM 'C 66441-67106 GARRISN4-LELANDO4 CKT 1   OPENS   A tower'
COM '**    Defined as multi-terminal'
COM 'D 66426-66456 BISMARK4-WASHBRN4 CKT 1   OPENS   E  MTL'
COM 'E 66456-67106 WASHBRN4-LELANDO4 CKT 1   OPENS   D  MTL'
COM '-------------------------------------------------------'
CONTINGENCY '105 1'
COM 'Tower with multi-terminal'
TRIP LINE FROM BUS 66426 TO BUS 67283 CKT 1
TRIP LINE FROM BUS 67283 TO BUS 66441 CKT 1
TRIP LINE FROM BUS 66441 TO BUS 67106 CKT 1
COM 'Also trips the following because of B'
TRIP LINE FROM BUS 66426 TO BUS 66456 CKT 1
TRIP LINE FROM BUS 66456 TO BUS 67106 CKT 1
END
CONTINGENCY '105 2'
COM 'Tower only'
TRIP LINE FROM BUS 66426 TO BUS 67283 CKT 1
TRIP LINE FROM BUS 67283 TO BUS 66441 CKT 1
TRIP LINE FROM BUS 66441 TO BUS 67106 CKT 1
END
CONTINGENCY '105 3'
COM 'Multi-terminal only'
TRIP LINE FROM BUS 66426 TO BUS 66456 CKT 1
TRIP LINE FROM BUS 66456 TO BUS 67106 CKT 1
END
COM '110  Defined as multi-circuit, tower'
COM 'A 66503-66530 BLAIR  4-WATERTN4 CKT 1   OPENS  B        tower'
COM 'B 66530-66550 WATERTN4-GRANITF4 CKT 1   OPENS  A or C   tower'
COM 'C 66503-66550 BLAIR  4-GRANITF4 CKT 1   OPENS  B        tower'
COM '-------------------------------------------------------'
CONTINGENCY '110 1'
TRIP LINE FROM BUS 66503 TO BUS 66530 CKT 1
TRIP LINE FROM BUS 66530 TO BUS 66550 CKT 1
END
CONTINGENCY '110 2'
TRIP LINE FROM BUS 66530 TO BUS 66550 CKT 1
TRIP LINE FROM BUS 66503 TO BUS 66550 CKT 1
END
COM '120   Defined as multi-circuit, tower'
COM 'A 66504-66531 BROOKNG7-WATERTN7 CKT 1   OPENS  B    tower'
COM 'B 66529-66537 WATERTN3-WHITE  3 CKT 1   OPENS  A    tower'
COM '-------------------------------------------------------'
CONTINGENCY '120'
TRIP LINE FROM BUS 66504 TO BUS 66531 CKT 1
TRIP LINE FROM BUS 66529 TO BUS 66537 CKT 1
END
COM '108   Defined as multi-circuit, tower'
```

```
COM 'A 66507-66509 FTTHOMP4-FTRANDL4   OPENS  B or C  tower'
COM 'B 66507-66516 FTTHOMP4-LAKPLAT4   OPENS  A       tower'
COM 'C 66509-66516 FTRANDL4-LAKPLAT4   OPENS  A       tower'
COM 'D 63041-63381 COAL CR4-UNDERWD4   OPENS  '
COM '-------------------------------------------------------'
CONTINGENCY '108 1'
TRIP LINE FROM BUS 66507 TO BUS 66509 CKT 1
TRIP LINE FROM BUS 66507 TO BUS 66516 CKT 1
TRIP LINE FROM BUS 63041 TO BUS 63381 CKT 1
END
CONTINGENCY '108 2'
TRIP LINE FROM BUS 66507 TO BUS 66509 CKT 1
TRIP LINE FROM BUS 66509 TO BUS 66516 CKT 1
TRIP LINE FROM BUS 63041 TO BUS 63381 CKT 1
END
COM '130  Defined as multi-circuit, tower'
COM 'A 66507-66523  FTTHOMP4-SIOUXFL4   OPENS  BorCorD  tower'
COM 'B 66507-67122  FTTHOMP4-STORLA 4   OPENS  A        tower, MTL'
COM 'C 66513-67122  HANLON 4-STORLA 4   OPENS  A        tower, MTL'
COM 'D 66513-66523  HANLON 4-SIOUXFL4   OPENS  A        tower'
COM '**    Defined as multi-terminal, MTL'
COM 'E 66507-67122  FTTHOMP4-STORLA 4   OPENS  F G'
COM 'F 66513-67122  HANLON 4-STORLA 4   OPENS  E G'
COM 'G 67122-67123  STORLA 4-STORLA 7      VLD SGL'
COM '-------------------------------------------------------'
CONTINGENCY '130 1'
TRIP LINE FROM BUS 66507 TO BUS 66900 CKT 1
TRIP LINE FROM BUS 66900 TO BUS 66523 CKT 1
COM **
COM TRIP LINE FROM BUS 66507 TO BUS 67122 CKT 1
TRIP LINE FROM BUS 66507 TO BUS 99617 CKT 1
TRIP LINE FROM BUS 99617 TO BUS 67122 CKT 1
COM **
COM 'Also trips the following because of B mtl'
COM TRIP LINE FROM BUS 66507 TO BUS 67122 CKT 1
TRIP LINE FROM BUS 66513 TO BUS 67122 CKT 1
TRIP LINE FROM BUS 67122 TO BUS 67123 CKT 1
END
CONTINGENCY '130 2'
TRIP LINE FROM BUS 66507 TO BUS 66900 CKT 1
TRIP LINE FROM BUS 66900 TO BUS 66523 CKT 1
TRIP LINE FROM BUS 66513 TO BUS 66523 CKT 1
END
COM '140  Defined as multi-circuit, tower'
COM 'A 66507-66514  FTTHOMP4-HURON  4  1   OPENS  B     tower'
COM 'B 66507-66514  FTTHOMP4-HURON  4  2   OPENS  A     tower'
COM '-------------------------------------------------------'
CONTINGENCY '140'
TRIP LINE FROM BUS 66507 TO BUS 66514 CKT 1
TRIP LINE FROM BUS 66507 TO BUS 66514 CKT 2
END
COM '150  Defined as multi-circuit, tower'
COM 'A 66507-66519  FTTHOMP4-OAHE   4  1   OPENS  B     tower'
COM 'B 66507-66519  FTTHOMP4-OAHE   4  2   OPENS  A     tower'
COM '-------------------------------------------------------'
CONTINGENCY '111'
TRIP LINE FROM BUS 66507 TO BUS 66519 CKT 1
TRIP LINE FROM BUS 66507 TO BUS 66519 CKT 2
END
COM '150  Defined as multi-circuit'
COM 'A 66507-66519  FTTHOMP4-OAHE   4  3   OPENS  B     tower'
COM 'B 66507-66519  FTTHOMP4-OAHE   4  4   OPENS  A     tower'
COM '-------------------------------------------------------'
CONTINGENCY '150'
TRIP LINE FROM BUS 66507 TO BUS 66519 CKT 3
TRIP LINE FROM BUS 66507 TO BUS 66519 CKT 4
END
COM '160  Defined as multi-circuit, tower'
COM 'A 66509-66565  FTRANDL4-SIOUXCY4   OPENS  BorCorD  tower'
COM 'B 66509-66526  FTRANDL4-UTICAJC4   OPENS  A        tower, MTL'
COM 'C 66526-66536  UTICAJC4-RASMUSN4   OPENS  A        tower, MTL'
```

```
COM 'D 66536-66565  RASMUSN4-SIOUXCY4   OPENS  A        tower'
COM '**    Defined as multi-terminal'
COM 'E 66509-66526  FTRANDL4-UTICAJC4   OPENS  F G'
COM 'F 66526-66523  UTICAJC4-SIOUXFL4   OPENS  E G'
COM 'G 66526-66536  UTICAJC4-RASMUSN4   OPENS  E F'
COM '-------------------------------------------------------'
CONTINGENCY '160 1'
TRIP LINE FROM BUS 66509 TO BUS 66565 CKT 1
TRIP LINE FROM BUS 66509 TO BUS 66526 CKT 1
COM 'Also trips the following because of B'
TRIP LINE FROM BUS 66526 TO BUS 66536 CKT 1
TRIP LINE FROM BUS 66523 TO BUS 66398 CKT 1
TRIP LINE FROM BUS 66398 TO BUS 66399 CKT 1
TRIP LINE FROM BUS 66398 TO BUS 66526 CKT 1
END
CONTINGENCY '160 2'
TRIP LINE FROM BUS 66509 TO BUS 66565 CKT 1
TRIP LINE FROM BUS 66536 TO BUS 66565 CKT 1
END
CONTINGENCY '160 3'
TRIP LINE FROM BUS 66509 TO BUS 66526 CKT 1
TRIP LINE FROM BUS 66523 TO BUS 66398 CKT 1
TRIP LINE FROM BUS 66398 TO BUS 66399 CKT 1
TRIP LINE FROM BUS 66398 TO BUS 66526 CKT 1
TRIP LINE FROM BUS 66526 TO BUS 66536 CKT 1
END
COM '170  Defined as multi-circuit, tower'
COM 'A 66514-66530  HURON  4-WATERTN4  1   OPENS  B   tower'
COM 'B 66514-66530  HURON  4-WATERTN4  2   OPENS  A   tower'
COM '-------------------------------------------------------'
CONTINGENCY '170 '
COM **
COM TRIP LINE FROM BUS 66514 TO BUS 99950 CKT 1
COM TRIP LINE FROM BUS 99950 TO BUS 66530 CKT 1
COM **
TRIP LINE FROM BUS 66514 TO BUS 66530 CKT 2
END
COM '180 GRE Defined as multi-terminal tower'
COM 'multi-terminal trips A B and C'
COM 'A 63041-63042 COAL CR4-COAL TP4 OPENS B, C'
COM 'B 63042-63049 COAL TP4-STANTON4 OPENS A, C'
COM 'C 63042-63044 COAL TP4-MCHENRY4 OPENS A, B'
COM '-------------------------------------------------------'
CONTINGENCY '180 1'
COM 'mtl outage portion'
TRIP LINE FROM BUS 63041 TO BUS 63042 CKT 1
TRIP LINE FROM BUS 63042 TO BUS 63049 CKT 1
TRIP LINE FROM BUS 63042 TO BUS 63044 CKT 1
END
COM '190 Defined as multi-terminal'
COM 'A 66436-66707  FARGO  7-CLDONIA7 CKT 1   OPENS B C D E F'
COM 'B 66707-66430  CALEDON7-EGF IND7 CKT 1   OPENS C C D E F'
COM 'C 66430-66443  EGF IND7-GRNDFKS7 CKT 1   OPENS A B D E F'
COM 'D 66772-66707  CALEDONT-CALEDON7 CKT 1   OPENS A B C E F'
COM 'E 66772-66777  CALEDONT-CALEDON9 CKT 1   OPENS A B C D F'
COM 'F 66772-67053  CALEDONT-CALEDON8 CKT 1   OPENS A B C D E'
COM '-------------------------------------------------------'
CONTINGENCY '190'
TRIP LINE FROM BUS 66436 TO BUS 66707 CKT 1
TRIP LINE FROM BUS 66707 TO BUS 66430 CKT 1
TRIP LINE FROM BUS 66430 TO BUS 66443 CKT 1
TRIP LINE FROM BUS 66772 TO BUS 66707 CKT 1
TRIP LINE FROM BUS 66772 TO BUS 66777 CKT 1
TRIP LINE FROM BUS 66772 TO BUS 67053 CKT 1
END
COM '200 Defined as multi-terminal'
COM 'A 66437-66759  GRNDFKS4-PICKERT4 CKT 1   OPENS B C D E'
COM 'B 66444-66759  JAMESTN4-PICKERT4 CKT 1   OPENS A C D E'
COM 'C 66759-63188  PICKERT4-PICKERTY CKT 1   OPENS A B D E'
COM 'D 63188-66923  PICKERTY-PICKERT8 CKT 1   OPENS A B C E'
COM 'E 63188-63167  PICKERTY-PICKERT9 CKT 1   OPENS A B C D'
```

```
COM '-------------------------------------------------------'
CONTINGENCY '200'
TRIP LINE FROM BUS 66437 TO BUS 66759 CKT 1
TRIP LINE FROM BUS 66444 TO BUS 66759 CKT 1
TRIP LINE FROM BUS 66759 TO BUS 63188 CKT 1
TRIP LINE FROM BUS 63188 TO BUS 66923 CKT 1
TRIP LINE FROM BUS 63188 TO BUS 63167 CKT 1
END
COM '210  Defined as multi-terminal'
COM 'A 66484-66488  NUNDRWD4-PHILTAP4  CKT 1   OPENS  B C'
COM 'B 66488-66519  PHILTAP4-OAHE   4  CKT 1   OPENS  A C'
COM 'C 66486-66488  PHILIP 4-PHILTAP4  CKT 1   OPENS  A B'
COM '-------------------------------------------------------'
CONTINGENCY '210'
TRIP LINE FROM BUS 66484 TO BUS 66488 CKT 1
TRIP LINE FROM BUS 66488 TO BUS 66519 CKT 1
TRIP LINE FROM BUS 66486 TO BUS 66488 CKT 1
END
COM '220  Defined as multi-terminal'
COM 'A 63358-63369 BUFFALO3-JAMESTN3   OPENS B C D E F G H I J K'
COM 'B 66792-63358 MAPLE R3-BUFFALO3   OPENS A C D E F G H I J K'
COM 'C 63358-63198 BUFFALO3-BUFFALOY   OPENS A B D E F G H I J K'
COM 'D 63198-63258 BUFFALOY-BUFFALO7   OPENS A B C E F G H I J K'
COM 'E 63198-63158 BUFFALOY-BUFFALO9   OPENS A B C D F G H I J K'
COM 'F 66792-63189 MAPLE R3-MAPLER1Y   OPENS A B C D E G H I J K'
COM 'G 63189-66754 MAPLER1Y-MAPLE R4   OPENS A B C D E F H I J K'
COM 'H 63189-63359 MAPLER1Y-MAPLER19   OPENS A B C D E F G I J K'
COM 'I 66792-63190 MAPLE R3-MAPLER2Y   OPENS A B C D E F G H J K'
COM 'J 63190-66754 MAPLER2Y-MAPLE R4   OPENS A B C D E F G H I K'
COM 'K 63190-63360 MAPLER2Y-MAPLER29   OPENS A B C D E F G H I J'
COM '-------------------------------------------------------'
CONTINGENCY '220'
TRIP LINE FROM BUS 63358 TO BUS 63369 CKT 1
TRIP LINE FROM BUS 66792 TO BUS 63358 CKT 1
TRIP LINE FROM BUS 63358 TO BUS 63198 CKT 1
TRIP LINE FROM BUS 63198 TO BUS 63258 CKT 1
TRIP LINE FROM BUS 63198 TO BUS 63158 CKT 1
TRIP LINE FROM BUS 66792 TO BUS 63189 CKT 1
TRIP LINE FROM BUS 63189 TO BUS 66754 CKT 1
TRIP LINE FROM BUS 63189 TO BUS 63359 CKT 1
TRIP LINE FROM BUS 63190 TO BUS 66754 CKT 1
TRIP LINE FROM BUS 66792 TO BUS 63190 CKT 1
TRIP LINE FROM BUS 63190 TO BUS 63360 CKT 1
END
COM '230  Defined as multi-terminal, OTP'
COM 'A 63363-63327  FORMAN 4-HANKSON4   OPENS  B C D'
COM 'B 63363-63362  FORMAN 4-OAKS   4   OPENS  A C D'
COM 'C 67326-63362  ELLENDL4-OAKS   4   OPENS  A B D'
COM 'D 63362-63162  OAKS   4-OAKS   9   OPENS  A B C'
COM 'A,B,C,D, MTL isolates the Forman 3 winding transformer'
COM 'on the high side (230kV) only.  The 115/41.6kV remains'
COM 'connected.'
COM 'E 63363-63193  FORMAN 4-FORMAN Y   OPENS  VLD SGL'
COM '-------------------------------------------------------'
CONTINGENCY '230'
COM 'Trip of the 230kV line sections and Forman'
COM 'transformer 230kV high side only.'
TRIP LINE FROM BUS 63363 TO BUS 63327 CKT 1
TRIP LINE FROM BUS 63363 TO BUS 63362 CKT 1
COM **
COM TRIP LINE FROM BUS 67326 TO BUS 63362 CKT 1
TRIP LINE FROM BUS 67326 TO BUS 63362 CKT 1
COM **
TRIP LINE FROM BUS 63362 TO BUS 63162 CKT 1
TRIP LINE FROM BUS 63363 TO BUS 63193 CKT 1
END
COM '240  Defined as multi-terminal, wapa/otp'
COM 'A 63263-63262  FORMN  7-GWINNER7 CKT 1   OPENS B C D E F G'
COM 'B 63262-63298  GWINNER7-HOVINGJ7 CKT 1   OPENS A C D E F G'
COM 'C 63298-63299  HOVINGJ7-HOVINGJ9 CKT 1   OPENS A B D E F G'
COM 'D 63298-63261  HOVINGJ7-LISBON 7 CKT 1   OPENS A B C E F G'
```

```
COM 'E 63261-63260  LISBON 7-ENDERLN7 CKT 1   OPENS A B C D F G'
COM 'F 63259-63260  ALICE  7-DNDERLN7 CKT 1   OPENS A B C D E G'
COM 'G 63258-63259  BUFFALO7-ALICE  7 CKT 1   OPENS A B C D E F'
COM '-------------------------------------------------------'
CONTINGENCY '240'
COM ' Line 63260 - 63259 is normally open in the summer'
COM ' which allows for the MTL below'
TRIP LINE FROM BUS 63258 TO BUS 63259 CKT 1
TRIP LINE FROM BUS 63259 TO BUS 63260 CKT 1
TRIP LINE FROM BUS 63260 TO BUS 63261 CKT 1
TRIP LINE FROM BUS 63261 TO BUS 63298 CKT 1
TRIP LINE FROM BUS 63298 TO BUS 63299 CKT 1
TRIP LINE FROM BUS 63298 TO BUS 63262 CKT 1
TRIP LINE FROM BUS 63262 TO BUS 63263 CKT 1
END
COM '250  GRE Defined as multi-terminal line, upa/otp'
COM 'A 66755-63047 PRAIRIE4-RAMSEY 4   VLD SGL'
COM 'B 63056-63047 BALTAJCT-RAMSEY 4   VLD SGL'
COM 'C 63266-63084 RAMSEY 7-RAMSEY Y   OPENS A B D E'
COM 'D 63047-63084 RAMSEY 4-RAMSEY Y   OPENS A B C E'
COM 'E 63084-63077 RAMSEY Y-RAMSEY T   OPENS A B C D'
COM '-------------------------------------------------------'
CONTINGENCY '250'
COM 'Transformer fault at Ramsey, mtl'
TRIP LINE FROM BUS 66755 TO BUS 63047 CKT 1
TRIP LINE FROM BUS 63056 TO BUS 63047 CKT 1
COM **
COM TRIP LINE FROM BUS 63266 TO BUS 63047 CKT 1
COM **
END
COM '260  GRE Defined as multi-terminal line'
COM 'A 63044-63056 MCHENRY4-BALTAJCT   OPENS B C'
COM 'B 63042-63044 COAL TP4-MCHENRY4   OPENS '
COM 'C 63044-63082 MCHENRY4-MCHENRYY   OPENS A B D E'
COM 'D 60140-63082 MCHENRY7-MCHENRYY   OPENS A B C E'
COM 'E 63082-63080 MCHENRYY-MCHENRYT   OPENS A B C D'
COM '-------------------------------------------------------'
CONTINGENCY '260'
TRIP LINE FROM BUS 63044 TO BUS 63056  CKT 1
TRIP LINE FROM BUS 63042 TO BUS 63044  CKT 1
COM **
COM TRIP LINE FROM BUS 63044 TO BUS 60140  CKT 1
COM **
END
COM ' '
COM ' '
COM ' '
COM '  END DAKOTA AREA CONTINGENCIES'
COM ' '
COM ' '
COM ' '
COM ' '
COM '  START NEBRASKA AREA CONTINGENCIES'
COM ' '
COM ' '
COM ' END NEBRASKA AREA CONTINGENCIES'
COM ' '
COM ' '
COM ' '
COM ' '
COM ' '
COM ' '
COM ' START MINNESOTA AREA CONTINGENCIES'
COM ' '
COM ' '
COM ' 501 Defined as multi-terminal, Drayton Transformer 1 TRIP'
COM 'A 66752-66787  DRAYTON4-DRAYTO1T CKT 1    OPENS B C'
COM 'B 66705-66787  DRAYTON7-DRAYTO1T CKT 1    OPENS A C'
COM 'C 66763-66787  DRAYTO19-DRAYTO1T CKT 1    0PENS A B'
COM '-------------------------------------------------------'
CONTINGENCY '501 1'
```

```
COM 'Trip Transformer 1'
TRIP LINE FROM BUS 66752 TO BUS 66787 CKT 1
TRIP LINE FROM BUS 66705 TO BUS 66787 CKT 1
TRIP LINE FROM BUS 66763 TO BUS 66787 CKT 1
END
COM ' The Drayton bus was updated with a ring bus.  The 2'
COM ' transformer trip/outage no longer open ends the 230kV line.'
COM ' 502 Defined as multi-terminal, Drayton Transformer 2 TRIP'
COM 'A 66752-66788  DRAYTON4-DARYTO2T CKT 1    OPENS B C'
COM 'B 66705-66788  DRAYTON7-DRAYTO2T CKT 1    OPENS A C'
COM 'C 66762-66788  DRAYTO29-DRAYTO2T CKT 1    OPENS A B'
COM '-------------------------------------------------------------'
CONTINGENCY '502 2'
COM 'Trip Transformer 2'
TRIP LINE FROM BUS 66752 TO BUS 66788 CKT 1
TRIP LINE FROM BUS 66705 TO BUS 66788 CKT 1
TRIP LINE FROM BUS 66762 TO BUS 66788 CKT 1
END
COM '500      GRE Defined as multi-terminal line'
COM 'A 66550-63050 GRANITF4-WILLMAR4   OPENS B'
COM 'B 63050-62427 WILLMAR4-WILLMAR8 OPENS A'
COM '-------------------------------------------------------'
CONTINGENCY '500'
TRIP LINE FROM BUS 66550 TO BUS 63050 CKT 1
TRIP LINE FROM BUS 63050 TO BUS 62427 CKT 1
END
COM '505  Defined as multi-circuit, NSP'
COM 'A 66551-66508 GRANITF7-S3     7 CKT 1   OPENS B C'
COM 'B 66552-66508 MARS ER7-S3     7 CKT 1   OPENS A C'
COM 'B 60170-66508 MARSHAL7-S3     7 CKT 1   OPENS A B'
COM '-------------------------------------------------------'
CONTINGENCY '505'
TRIP LINE FROM BUS 66551 TO BUS 66508 CKT 1
TRIP LINE FROM BUS 66552 TO BUS 66508 CKT 1
COM **
COM TRIP LINE FROM BUS 60170 TO BUS 60371 CKT 1
TRIP LINE FROM BUS 60170 TO BUS 60375 CKT 1
TRIP LINE FROM BUS 60375 TO BUS 60371 CKT 1
COM **
TRIP LINE FROM BUS 60371 TO BUS 66508 CKT 1
END
COM '510  Defined as multi-terminal'
COM 'A 66550-66554  GRANITF4-MORRIS 4 CKT 1   OPENS  B C'
COM 'B 66554-66555  MORRIS 4-MORRIS 7 CKT 1   OPENS  A C'
COM 'C 66553-66554  MOORHED4-MORRIS 4 CKT 1   VLD SGL'
COM '-------------------------------------------------------'
CONTINGENCY '510'
TRIP LINE FROM BUS 66550 TO BUS 66554 CKT 1
TRIP LINE FROM BUS 66554 TO BUS 66555 CKT 1
TRIP LINE FROM BUS 66553 TO BUS 66554 CKT 1
END
COM '515   Defined as multi-terminal'
COM 'A 66717-63237  ULRICH 7-MAHNOMN7 CKT 1   OPENS  B C D E F'
COM 'B 63236-66717  ADUBON 7-ULRICH 7 CKT 1   OPENS  A C D E F'
COM 'C 63237-63238  MAHNOMN7-WINGER 7 CKT 1   OPENS  A B D E F'
COM 'D 66717-66781  ULRICH 7-ULRICH T CKT 1   OPENS  A B C E F'
COM 'E 66781-67039  ULRICH T-ULRICH 8 CKT 1   OPENS  A B C D F'
COM 'F 66781-66773  ULRICH T-ULRICH 9 CKT 1   OPENS  A B C D E'
COM '-------------------------------------------------------'
CONTINGENCY '515'
TRIP LINE FROM BUS 66717 TO BUS 63237 CKT 1
TRIP LINE FROM BUS 63236 TO BUS 66717 CKT 1
TRIP LINE FROM BUS 63237 TO BUS 63238 CKT 1
TRIP LINE FROM BUS 66717 TO BUS 66781 CKT 1
TRIP LINE FROM BUS 66781 TO BUS 67039 CKT 1
TRIP LINE FROM BUS 66781 TO BUS 66773 CKT 1
END
COM '520  Defined as multi-terminal'
COM 'A 66710-63246 NARY   7-BEMIDJI7 CKT 1   OPENS  B C D E F G I J'
COM 'B 66710-63247 NARY   7-CASS LK7 CKT 1   OPENS  A C D E F G I J'
COM 'C 63247-63248 CASS LK7-CASS N 7 CKT 1   OPENS  I J'
```

```
COM 'D 66710-66716 NARY   7-LAPORTE7 CKT 1   OPENS  A B C E F G I J'
COM 'E 66716-61640 LAPORTE7-BADOURA7 CKT 1   OPENS  A B C D F G I J'
COM 'F 63247-63197 CASS LK7-CASS LKY CKT 1   OPENS  G '
COM 'G 63197-63347 CASS LKY-CASS LK8 CKT 1   OPENS  F'
COM 'I 63247-63349 CASS LK7-CASSPIP9 CKT 1   OPENS  C J'
COM 'J 63248-63348 CASS N 7-NO PIPE9 CKT 1   OPENS  C I'
COM '-------------------------------------------------------'
CONTINGENCY '520 1'
COM ' Trip of A or B, or D or E, trips all, mtl'
TRIP LINE FROM BUS 66710 TO BUS 63246 CKT 1
TRIP LINE FROM BUS 66710 TO BUS 63247 CKT 1
TRIP LINE FROM BUS 63247 TO BUS 63248 CKT 1
TRIP LINE FROM BUS 66710 TO BUS 66716 CKT 1
TRIP LINE FROM BUS 66716 TO BUS 61638 CKT 1
TRIP LINE FROM BUS 61638 TO BUS 61640 CKT 1
TRIP LINE FROM BUS 63247 TO BUS 63197 CKT 1
TRIP LINE FROM BUS 63197 TO BUS 63347 CKT 1
TRIP LINE FROM BUS 63247 TO BUS 63349 CKT 1
TRIP LINE FROM BUS 63248 TO BUS 63348 CKT 1
END
CONTINGENCY '520 2'
COM ' Trip of C or I or J OPENS each other'
COM ' Transformers connected to bus via fault'
COM ' switch device'
TRIP LINE FROM BUS 63247 TO BUS 63248 CKT 1
TRIP LINE FROM BUS 63247 TO BUS 63349 CKT 1
TRIP LINE FROM BUS 63248 TO BUS 63348 CKT 1
END
CONTINGENCY '520 3'
COM ' Trip of F or G   OPENS each other'
COM ' Transformers connected to bus via fault'
COM ' switch device'
TRIP LINE FROM BUS 63247 TO BUS 63197 CKT 1
TRIP LINE FROM BUS 63197 TO BUS 63347 CKT 1
END
COM '525  Defined as multi-circuit, tower'
COM 'A 60117-60132  CHERRYC7-WSX FLS7 CKT 1   OPENS  B   tower'
COM 'B 60129-60132  SPLT RK7-WSX FLS7 CKT 1   OPENS  A   tower'
COM '-------------------------------------------------------'
CONTINGENCY '525 1'
TRIP LINE FROM BUS 60117 TO BUS 60132 CKT 1
TRIP LINE FROM BUS 60129 TO BUS 60132 CKT 1
END
COM '530  Defined as multi-circuit'
COM 'A 60119-60171  LKYNKTN7-MARSHTP7 CKT 1   OPENS B C D'
COM 'B 60148-60171  MINVALY4-MARSHTP7 CKT 1   OPENS A C D'
COM 'C 60170-60171  MARSHAL7-MARSHTP7 CKT 1   OPENS A B'
COM 'D 60119-60853 LKYNKTN7-LK YANK8 CKT 1   OPENS A B C'
COM '-------------------------------------------------------'
CONTINGENCY '530'
TRIP LINE FROM BUS 60119 TO BUS 60171 CKT 1
TRIP LINE FROM BUS 60148 TO BUS 60171 CKT 1
TRIP LINE FROM BUS 60170 TO BUS 60171 CKT 1
TRIP LINE FROM BUS 60119 TO BUS 60853 CKT 2
END
COM '535  Defined as multi-circuit tower and mtl'
COM 'A 60134-60135  SHEYNNE7-CASS CO7 CKT 1   OPENS  B,C tower only'
COM 'B 66761-60134  MODEROW7-SHEYNNE7 CKT 1   OPENS  A,C, also mtl'
COM 'C 66761-60135  MODEROW7-CASS CO7 CKT 1   OPENS  A,B, also mtl'
COM '**    Defined as multi-terminal'
COM 'E 60135-60137  CASS CO7-REDRIVR7 CKT 1   OPENS  D,F'
COM 'F 60135-66761  CASS CO7-MODEROW7 CKT 1   OPENS  D,E'
COM 'G 66761-60134  MODEROW7-SHEYNNE7 CKT 1   OPENS E,F,'
COM '-------------------------------------------------------'
CONTINGENCY '535 1'
COM 'Tower contingency of Sheyenne-Cass Co.,Moderow-Sheyenne'
COM 'and Moderow-Cass Co. 115kV lines. With combination mtl'
COM 'portion.'
TRIP LINE FROM BUS 60134 TO BUS 60135 CKT 2
TRIP LINE FROM BUS 66761 TO BUS 60134 CKT 1
TRIP LINE FROM BUS 66761 TO BUS 60135 CKT 1
```

```
COM 'Also trips the following MTL because of C'
TRIP LINE FROM BUS 60135 TO BUS 60137 CKT 1
END
CONTINGENCY '535 2'
COM ' Multi-terminal only'
TRIP LINE FROM BUS 60135 TO BUS 60137 CKT 1
TRIP LINE FROM BUS 60135 TO BUS 66761  CKT 1
TRIP LINE FROM BUS 66761 TO BUS 60134 CKT 1
END
COM '*************************************************************'
COM `CONTINGENCY 540 IS NO LONGER A MULTI-TERMINAL CONTINGENCY'
COM ` BREAKERS WERE' ADDED AT AUDUBON - REMOVE CONTINGENCY 540'
COM ' FROM THE LIST'
COM '540  Defined as multi-terminal'
COM 'A 60133-63336  SHEYNNE4-AUDUBON4 CKT 1   OPENS  B C D E F G H'
COM 'B 63336-63053  AUDUBON4-HUBBARD4 CKT 1   OPENS  A C D E F G H'
COM 'C 60133-60134  SHEYNNE4-SHEYNNE7 CKT 1   OPENS  A B D E F G H'
COM 'D 60133-60134  SHEYNNE4-SHEYNNE7 CKT 1   OPENS  A B C E F G H'
COM 'E 63336-63136 AUDUBON4-AUDUBON9 CKT 1   OPENS  A B C D F G H'
COM 'F 63336-63202 AUDUBON4-AUDUBONY CKT 1   OPENS  A B C D E G H'
COM 'G 63202-63236   AUDUBONY-AUDUBON7 CKT 1   OPENS  A B C D E F H'
COM 'H 63202-63136 AUDUBONY-AUDUBON9 CKT 1   OPENS  A B C D E F G'
COM '-------------------------------------------------------------'
COM `CONTINGENCY '540'
COM `TRIP LINE FROM BUS 60133 TO BUS 63336 CKT 1'
COM `TRIP LINE FROM BUS 63336 TO BUS 63053 CKT 1'
COM `TRIP LINE FROM BUS 60133 TO BUS 60134 CKT 1'
COM `TRIP LINE FROM BUS 60133 TO BUS 60134 CKT 2'
COM `TRIP LINE FROM BUS 63336 TO BUS 63136 CKT 1'
COM `TRIP LINE FROM BUS 63336 TO BUS 63202 CKT 1'
COM `TRIP LINE FROM BUS 63202 TO BUS 63236 CKT 1'
COM `TRIP LINE FROM BUS 63202 TO BUS 63136 CKT 1'
COM `END'
COM '*************************************************************'
COM '545  Defined as multi-terminal'
COM 'A 63325-63327   BROWNSV4-HANKSON4 CKT 1   OPENS  B C'
COM 'B 63314-63325   BIGSTON4-BROWNSV4 CKT 1   OPENS  A C'
COM 'C 63325-63125 BROWNSV4-BROWNSV9 CKT 1   OPENS  A B'
COM '-------------------------------------------------------------'
CONTINGENCY '545'
TRIP LINE FROM BUS 63325 TO BUS 63327 CKT 1
TRIP LINE FROM BUS 63314 TO BUS 63325 CKT 1
TRIP LINE FROM BUS 63325 TO BUS 63125 CKT 1
END
COM '550-A  Defined as multi-terminal'
COM 'A 66555-63219  MORRIS 7-GRANTCO7 CKT 1   OPENS  B'
COM 'B 63219-63223  GRANTCO7-HOOT LK7 CKT 1   OPENS  A'
COM '-------------------------------------------------------------'
CONTINGENCY '550'
TRIP LINE FROM BUS 66555 TO BUS 63219 CKT 1
TRIP LINE FROM BUS 63219 TO BUS 63223 CKT 1
END
COM '550-B  Defined as multi-terminal, otp'
COM 'A 63219-63220    GRANTCO7-ELBOWLK7 CKT 1   OPENS  B C D'
COM 'B 63220-63221    ELBOWLK7-BRANDN 7 CKT 1   OPENS  A C D'
COM 'C 63221-67452  BRANDN 7-ALEXSS   CKT 1   OPENS  A B D'
COM 'D 63221-67455  BRANDN 7-BRANDN 9 CKT 1   OPENS  A B C'
COM '-------------------------------------------------------------'
CONTINGENCY '550-B'
TRIP LINE FROM BUS 63219 TO BUS 63220 CKT 1
TRIP LINE FROM BUS 63220 TO BUS 63221 CKT 1
TRIP LINE FROM BUS 63221 TO BUS 67452 CKT 1
TRIP LINE FROM BUS 63221 TO BUS 67455 CKT 1
END
COM '551     Defined as multi-terminal, otp'
COM 'A 67452-63222  ALEXSS  -ALEXAND7 CKT 1   OPENS  B'
COM 'B 63222-60144 ALEXAND7-DGLASCO7 CKT 1   OPENS  A'
COM '-------------------------------------------------------------'
CONTINGENCY '551'
TRIP LINE FROM BUS 67452 TO BUS 63222 CKT 1
TRIP LINE FROM BUS 63222 TO BUS 60144 CKT 1
```

```
END
COM '552     Defined as multi-terminal, otp'
COM 'A 67452-67453 ALEXSS  -ALEXSWM  CKT 1   OPENS  B'
COM 'B 67453-67454 ALEXSWM -ALEXPLDM CKT 1   OPENS  A'
COM '-------------------------------------------------------'
CONTINGENCY '552'
TRIP LINE FROM BUS 67452 TO BUS 67453 CKT 1
TRIP LINE FROM BUS 67453 TO BUS 67454 CKT 1
END
COM '553     Defined as multi-terminal, otp'
COM 'A 67454-62527 ALEXPLDM-ELMO   7 CKT 1   OPENS  B'
COM 'B 62527-62531 ELMO   7-INMAN  7 CKT 1   OPENS  A'
COM '-------------------------------------------------------'
CONTINGENCY '553'
COM **
COM TRIP LINE FROM BUS 67454 TO BUS 67471 CKT 1
COM TRIP LINE FROM BUS 67471 TO BUS 62752 CKT 1
TRIP LINE FROM BUS 67454 TO BUS 62752 CKT 1
COM **
TRIP LINE FROM BUS 62527 TO BUS 62531 CKT 1
END
COM '560  Defined as multi-terminal'
COM 'A 63239-63238   BAGLEY 7-WINGER 7 CKT 1   OPENS  B C D E F G H I J K L'
COM 'B 63239-63243   BAGLEY 7-SHEVLIN7 CKT 1   OPENS  A C D E F G H I J K L'
COM 'C 63239-63241   BAGLEY 7-CLEARBR7 CKT 1   OPENS  A B D E F G H I J K L'
COM 'D 63243-63245   SHEVLIN7-WILTON 7 CKT 1   OPENS  A B C E F G H I J K L'
COM 'E 63243-66727   SHEVLIN7-RICELKT7 CKT 1   OPENS  A B C D F G H I J K L'
COM 'F 63241-63240   CLEARBR7-MN PIPE7 CKT 1   OPENS  A B C D E G H I J K L'
COM 'G 63241-63242   CLEARBR7-CLBKPIP7 CKT 1   OPENS  A B C D E F H I J K L'
COM 'H 66727-66729   RICELKT7-RICELAK7 CKT 1   OPENS  A B C D E F G I J K L'
COM 'I 66727-63244   RICELKT7-ITASKA 7 CKT 1   OPENS  A B C D E F G H J K L'
COM 'J 63240-63340 MN PIPE7-MN PIPE9 CKT 1   OPENS  F'
COM 'K 63242-63342 CLBKPIP7-CLBK LK9 CKT 1   OPENS  G'
COM 'L 63244-63344 ITASKA 7-ITASKA 9 CKT 1   OPENS  I'
COM '---------------------------------------------------------'
CONTINGENCY '560 1'
COM 'Trip of A or B or C or D or E or F or'
COM 'G or H or I trip each other and J,K,L'
TRIP LINE FROM BUS 63239 TO BUS 63238 CKT 1
TRIP LINE FROM BUS 63239 TO BUS 63243 CKT 1
TRIP LINE FROM BUS 63239 TO BUS 63241 CKT 1
TRIP LINE FROM BUS 63245 TO BUS 63281 CKT 1
TRIP LINE FROM BUS 63281 TO BUS 63285 CKT 1
TRIP LINE FROM BUS 63285 TO BUS 63243 CKT 1
TRIP LINE FROM BUS 63243 TO BUS 63282 CKT 1
TRIP LINE FROM BUS 63282 TO BUS 66727 CKT 1
TRIP LINE FROM BUS 63241 TO BUS 63240 CKT 1
TRIP LINE FROM BUS 63241 TO BUS 63242 CKT 1
TRIP LINE FROM BUS 66727 TO BUS 66729 CKT 1
TRIP LINE FROM BUS 66727 TO BUS 63244 CKT 1
TRIP LINE FROM BUS 63240 TO BUS 63340 CKT 1
TRIP LINE FROM BUS 63242 TO BUS 63342 CKT 1
TRIP LINE FROM BUS 63244 TO BUS 63344 CKT 1
END
CONTINGENCY '560 2'
COM 'J trips E only'
TRIP LINE FROM BUS 63240 TO BUS 63340 CKT 1
TRIP LINE FROM BUS 63241 TO BUS 63240 CKT 1
END
CONTINGENCY '560 3'
COM 'K trips F only'
TRIP LINE FROM BUS 63242 TO BUS 63342 CKT 1
TRIP LINE FROM BUS 63241 TO BUS 63242 CKT 1
END
CONTINGENCY '560 4'
COM 'L trips I only'
TRIP LINE FROM BUS 63244 TO BUS 63344 CKT 1
TRIP LINE FROM BUS 66727 TO BUS 63244 CKT 1
END
COM '565 Defined as multi-terminal, mpl'
COM 'A 63246-63245   BEMIDJI7-WILTON 7  CKT 1   OPENS B C D E'
```

```
COM 'B 63245-63243   WILTON 7-SHEVLIN7  CKT 1   OPENS B C D E'
COM 'C 63245-66776 WILTON 7-WILTON T  CKT 1   OPENS A C D E'
COM 'D 66776-66968 WILTON T-WILTON 8  CKT 1   OPENS A B D E'
COM 'E 66776-63145 WILTON T-WILTON 9  CKT 1   OPENS A B C D'
COM '-------------------------------------------------------'
CONTINGENCY '565'
COM 'Multi-terminal with fault on Wilton to'
COM 'Bemidji 115 kV line.
TRIP LINE FROM BUS 63246 TO BUS 63245 CKT 1
TRIP LINE FROM BUS 63245 TO BUS 63281 CKT 1
TRIP LINE FROM BUS 63281 TO BUS 63285 CKT 1
TRIP LINE FROM BUS 63285 TO BUS 63243 CKT 1
TRIP LINE FROM BUS 63245 TO BUS 66776 CKT 1
TRIP LINE FROM BUS 66776 TO BUS 66968 CKT 1
TRIP LINE FROM BUS 66776 TO BUS 63145 CKT 1
END
COM '570  Defined as a multi-terminal'
COM 'A 66705-63255   DRAYTON7-DONALDS7  CKT 1   OPENS B C D E F G H'
COM 'B 63255-63256   DONALDS7-DONDPIP7  CKT 1   OPENS A C D E F G H'
COM 'C 63255-66718   DONALDS7-HALMA  7  CKT 1   see mtl 153'
COM 'D 63255-66714   DONALDS7-WARSAW 7  CKT 1   see mtl 156'
COM 'E 63255-63155 DONALDS7-DONALDS9  CKT 1   OPENS F'
COM 'F 63255-63155 DONALDS7-DONALDS9  CKT 2   OPENS E'
COM 'G 63256-63356 DONDPIP7-DON PIP9  CKT 1   OPENS B H'
COM 'H 63256-63356 DONDPIP7-DON PIP9  CKT 2   OPENS B G'
COM 'A and B will not cause additional lines in 575 or 580 to open'
COM 'Simulating trip of G or H is redundant to simulating trip'
COM 'of A or B'
COM '-------------------------------------------------------'
CONTINGENCY '570 1'
COM 'Trip of A or B OPENS all sections'
COM 'Trip of C and D are shown in 153 and 156 below'
TRIP LINE FROM BUS 66705 TO BUS 63255 CKT 1
TRIP LINE FROM BUS 63255 TO BUS 63256 CKT 1
TRIP LINE FROM BUS 63255 TO BUS 66718 CKT 1
TRIP LINE FROM BUS 63255 TO BUS 66714 CKT 1
TRIP LINE FROM BUS 63255 TO BUS 63155 CKT 1
TRIP LINE FROM BUS 63255 TO BUS 63155 CKT 2
TRIP LINE FROM BUS 63256 TO BUS 63356 CKT 1
TRIP LINE FROM BUS 63256 TO BUS 63356 CKT 2
END
CONTINGENCY '570 2'
COM 'Trip of E OPENS F only, paralell bank'
TRIP LINE FROM BUS 63255 TO BUS 63155 CKT 1
TRIP LINE FROM BUS 63255 TO BUS 63155 CKT 2
END
COM '575  Defined as multi-terminal'
COM 'A 63255-66718   DONALDS7-HALMA  7 CKT 1    OPENS  B C D E F G H'
COM 'B 66718-66708   HALMA  7-KARLSTD7 CKT 1    OPENS  A C D E F G H'
COM 'C 66708-63254   KARLSTD7-VIKING 7 CKT 1    OPENS  A B D E F G H'
COM 'D 63254-66713   VIKING 7-TRFALLS7 CKT 1    OPENS  A B C E F G H'
COM 'E 66708-66785 KARLSTD7-KARLSTDY CKT 1    OPENS  F G'
COM 'F 66785-66838 KARLSTDY-KARLSTD8 CKT 1    OPENS  E G'
COM 'G 66785-63156 KARLSTDY-KARLSTD9 CKT 1    OPENS  E F'
COM 'H 63254-63354 VIKING 7-VIK PIP9 CKT 1    OPENS  A B C D E F G'
COM '-------------------------------------------------------'
CONTINGENCY '575'
COM 'Trip of A or B or C or D or H will open all other sections.'
TRIP LINE FROM BUS 63255 TO BUS 66718 CKT 1
TRIP LINE FROM BUS 66718 TO BUS 66708 CKT 1
TRIP LINE FROM BUS 66708 TO BUS 63254 CKT 1
TRIP LINE FROM BUS 63254 TO BUS 66713 CKT 1
TRIP LINE FROM BUS 66708 TO BUS 66785 CKT 1
TRIP LINE FROM BUS 66785 TO BUS 66838 CKT 1
TRIP LINE FROM BUS 66785 TO BUS 63156 CKT 1
TRIP LINE FROM BUS 63254 TO BUS 63354 CKT 1
END
COM '576  Defined as multi-terminal'
COM 'A 66713-63253  TRFALLS7-PLUMPIP7 CKT 1    OPENS  B C D E F'
COM 'B 63253-63251  PLUMPIP7-PLUMTAP7 CKT 1    OPENS  A C D E F'
COM 'C 63251-63252  PLUMTAP7-PLUMMER7 CKT 1    OPENS  A B D E F'
```

```
COM 'D 63251-63238  PLUMTAP7-WINGER 7 CKT 1    OPENS  A B C E F'
COM 'E 63253-63353  PLUMPIP7-PLUMPIP9 CKT 1    OPENS  F'
COM 'F 63253-63353  PLUMPIP7-PLUMPIP9 CKT 2    OPENS  E'
COM '-------------------------------------------------------'
CONTINGENCY '576'
COM 'Trip of A or B or C or D will open all other sections.'
TRIP LINE FROM BUS 66713 TO BUS 63253 CKT 1
TRIP LINE FROM BUS 63253 TO BUS 63251 CKT 1
TRIP LINE FROM BUS 63251 TO BUS 63252 CKT 1
TRIP LINE FROM BUS 63251 TO BUS 63238 CKT 1
TRIP LINE FROM BUS 63253 TO BUS 63353 CKT 1
TRIP LINE FROM BUS 63253 TO BUS 63353 CKT 2
END
COM '580  Defined as multi-terminal'
COM 'A 66706-66722  FALCONR7-OSLO   7 CKT 1   OPENS  B C D E F G'
COM 'B 66722-66714  OSLO   7-WARSAW 7 CKT 1   OPENS  A C D E F G'
COM 'C 66714-63255  WARSAW 7-DONALDS7 CKT 1   OPENS  A B D E F G'
COM 'D 66722-66713  OSLO   7-TRFALLS7 CKT 1   OPENS  A B C E F G'
COM 'E 66775-66714  WARSAW T-WARSAW 7 CKT 1   OPENS  F G'
COM 'F 66775-66834  WARSAW T-WARSAW 8 CKT 1   OPENS  E G'
COM 'G 66775-66774  WARSAW T-WARSAW 9 CKT 1   OPENS  E F'
COM ' See mtl FFF below'
COM '-------------------------------------------------------'
CONTINGENCY '585'
TRIP LINE FROM BUS 66443 TO BUS 66706 CKT 1
TRIP LINE FROM BUS 66706 TO BUS 66722 CKT 1
TRIP LINE FROM BUS 66706 TO BUS 63249 CKT 1
END
COM '590  Defined as multi-terminal'
COM 'A 63214-63213   BIGSTON7-MARIETT7 CKT 1   OPENS  B C D E'
COM 'B 63213-63212   MARIETT7-BURR   7 CKT 1   OPENS  A C D E'
COM 'C 63212-63211   BURR   7-CANBY  7 CKT 1   OPENS  A B D E'
COM 'D 63212-63210   BURR   7-TORONTO7 CKT 1   OPENS  A B C E'
COM 'E 63213-63113 MARIETT7-MARIETT9 CKT 1   OPENS  A B C D'
COM '-------------------------------------------------------'
CONTINGENCY '590'
TRIP LINE FROM BUS 63214 TO BUS 63213 CKT 1
TRIP LINE FROM BUS 63213 TO BUS 63212 CKT 1
TRIP LINE FROM BUS 63212 TO BUS 63211 CKT 1
TRIP LINE FROM BUS 63212 TO BUS 63210 CKT 1
TRIP LINE FROM BUS 63213 TO BUS 63113 CKT 1
END
COM '595  Defined as multi-terminal'
COM 'A 63215-63216  HIWY12 7-ORTONVL7 CKT 1   OPENS  B'
COM 'B 63214-63215  BIGSTON7-HIWY12 7 CKT 1   OPENS  A'
COM '-------------------------------------------------------'
CONTINGENCY '595'
TRIP LINE FROM BUS 63215 TO BUS 63216 CKT 1
TRIP LINE FROM BUS 63214 TO BUS 63215 CKT 1
END
COM '600  Defined as multi-terminal'
COM 'A 63249-63250   CRKSTON7-FERTILE7 CKT 1   OPENS  B C'
COM 'B 63250-63238   FERTILE7-WINGER 7 CKT 1   OPENS  A C'
COM 'C 63250-63150 FERTILE7-FERTILE9 CKT 1   OPENS  A B'
COM '-------------------------------------------------------'
CONTINGENCY '600'
TRIP LINE FROM BUS 63249 TO BUS 63250 CKT 1
TRIP LINE FROM BUS 63250 TO BUS 63238 CKT 1
TRIP LINE FROM BUS 63250 TO BUS 63150 CKT 1
END
COM '605  Defined as multi-terminal'
COM 'A 63223-63233   HOOT LK7-EDGETAP7 CKT 1   OPENS  B C D E F G H I'
COM 'B 63233-63234   EDGETAP7-PEL RPD7 CKT 1   OPENS  A C D E F G H I'
COM 'C 63233-63232   EDGETAP7-EDGETWN7 CKT 1   OPENS  A B D E F G H I'
COM 'D 63234-62528  PEL RPD7-TAMARAC7 CKT 1   OPENS  A B C E F G H I'
COM 'E 62528-62529  TAMARAC7-FRAZEE 7 CKT 1   OPENS  A B C D F G H I'
COM 'F 63236-62529  AUDUBON7-FRAZEE 7 CKT 1   OPENS  A B C D E G H I'
COM 'G 62528-62574 TAMARAC7-TAMARAC9 CKT 1   OPENS  A B C D E F H I'
COM 'H 62528-62574 TAMARAC7-TAMARAC9 CKT 2   OPENS  A B C D E F G I'
COM 'I 62529-62530  FRAZEET7-FRAZEE 7 CKT 1   OPENS  A B C D E f G H'
COM '-------------------------------------------------------'
```

```
CONTINGENCY '605'
TRIP LINE FROM BUS 63223 TO BUS 63233 CKT 1
TRIP LINE FROM BUS 63233 TO BUS 63234 CKT 1
TRIP LINE FROM BUS 63233 TO BUS 63232 CKT 1
TRIP LINE FROM BUS 63234 TO BUS 62528 CKT 1
TRIP LINE FROM BUS 62528 TO BUS 62533 CKT 1
TRIP LINE FROM BUS 62533 TO BUS 62529 CKT 1
TRIP LINE FROM BUS 63236 TO BUS 62529 CKT 1
TRIP LINE FROM BUS 62528 TO BUS 62574 CKT 1
TRIP LINE FROM BUS 62528 TO BUS 62574 CKT 2
TRIP LINE FROM BUS 62529 TO BUS 62530 CKT 1
END
COM 'CONTINGENCY 610 HAS NEW BREAKERS BEING ADDED AT WAHPETON'
COM '610  Defined as multi-terminal'
COM 'A 63331-63329 FERGSFL4-WAHPETN4 CKT 1   VLD SGL'
COM 'B 63327-63329 HANKSON4-WAHPETN4 CKT 1   VLD SGL'
COM 'C 66754-63329 MAPLE R4-WAHPETN4 CKT 1   VLD SGL'
COM 'D 63329-63191 WAHPETN4-WAHPET1Y CKT 1   OPENS  A B C E F G H I'
COM 'E 63191-63229 WAHPET1Y-WAHPETN7 CKT 1   OPENS  A B C D F G H I'
COM 'F 63191-63129 WAHPET1Y-WAHPETN9 CKT 1   OPENS  A B C D E G H I'
COM 'G 63329-63201 WAHPETN4-WHAPET2Y CKT 1   OPENS  A B C D E F H I'
COM 'H 63201-63229 WAHPET2Y-WAHPETN7 CKT 1   OPENS  A B C D E F G I'
COM 'I 63201-63129 WAHPET2Y-WAHPETN9 CKT 1   OPENS  A B C D E F G H'
COM '-------------------------------------------------------'
CONTINGENCY '610   1'
TRIP LINE FROM BUS 63331 TO BUS 63329 CKT 1
TRIP LINE FROM BUS 66754 TO BUS 63329 CKT 1
TRIP LINE FROM BUS 63329 TO BUS 63191 CKT 1
TRIP LINE FROM BUS 63191 TO BUS 63229 CKT 1
TRIP LINE FROM BUS 63191 TO BUS 63129 CKT 1
END
CONTINGENCY '610   2'
TRIP LINE FROM BUS 63327 TO BUS 63303 CKT 1
TRIP LINE FROM BUS 63327 TO BUS 63329 CKT 1
TRIP LINE FROM BUS 63329 TO BUS 63201 CKT 1
TRIP LINE FROM BUS 63201 TO BUS 63229 CKT 1
TRIP LINE FROM BUS 63201 TO BUS 63129 CKT 1
END
COM
COM '615  Defined as multi-terminal'
COM 'A 61610-63053  BADOURA4-HUBBARD4 CKT 1    OPENS  B C D E'
COM 'B 61610-61612  BADOURA4-RIVERTN2 CKT 1    OPENS  A C D E'
COM 'C 61610-61794  BADOURA4-BADOUJCT CKT 1    OPENS  A B D E'
COM 'D 61794-61640  BADOUJCT-BADOURA7 CKT 1    OPENS  A B C E'
COM 'E 61794-61795  BADOUJCT-BADOUTRT CKT 1    OPENS  A B C D'
COM '-------------------------------------------------------'
CONTINGENCY '615'
TRIP LINE FROM BUS 61610 TO BUS 63053 CKT 1
TRIP LINE FROM BUS 61610 TO BUS 61612 CKT 1
TRIP LINE FROM BUS 61610 TO BUS 61794 CKT 1
TRIP LINE FROM BUS 61794 TO BUS 61640 CKT 1
TRIP LINE FROM BUS 61794 TO BUS 61795 CKT 1
END
COM 'From GRE, New 115 kV multi-terminal lines for 2000 summer'
COM ' 616 Defined as multi-terminal line'
COM 'A 61673-62447 ARROWHD7-BERGNTP7 CKT 1   OPENS OTHER SEGMENTS'
COM 'B 61720-62447 COTTNTP7-BERGNTP7 CKT 1   OPENS OTHER SEGMENTS'
COM 'C 62446-62447 BERGNLK7-BERGNTP7 CKT 1   OPENS OTHER SEGMENTS'
COM 'D 61720-62452 COTTNTP7-COTTON 7 CKT 1   OPENS OTHER SEGMENTS'
COM 'E 61720-61718 COTTNTP7-16L TAP7 CKT 1   OPENS OTHER SEGMENTS'
COM 'F 61718-61721 16L TAP7-ETCO   7 CKT 1   OPENS OTHER SEGMENTS'
COM 'G 61718-62454 16L TAP7-PEARY  7 CKT 1   OPENS OTHER SEGMENTS'
COM 'H 61708-62454 VIRGNIA7-PEARY  7 CKT 1   OPENS OTHER SEGMENTS'
COM '-------------------------------------------------------'
CONTINGENCY '616'
TRIP LINE FROM BUS 61673 TO BUS 62447 CKT 1
TRIP LINE FROM BUS 61720 TO BUS 62447 CKT 1
TRIP LINE FROM BUS 62446 TO BUS 62447 CKT 1
TRIP LINE FROM BUS 61720 TO BUS 62452 CKT 1
TRIP LINE FROM BUS 61720 TO BUS 61718 CKT 1
TRIP LINE FROM BUS 61718 TO BUS 61721 CKT 1
```

```
TRIP LINE FROM BUS 61718 TO BUS 62454 CKT 1
TRIP LINE FROM BUS 61708 TO BUS 62454 CKT 1
END
COM 'From GRE, New 115 kV multi-terminal lines for 2000 summer'
COM ' 617  Defined as multi-terminal'
COM 'A 61642-62895  VERNDLE7-THMSTWN7   OPENS  B C D'
COM 'B 62895-61646  THMSTWN7-DOGLKTP7   OPENS  A C D'
COM 'C 61644-61646  DOGLAKE7-DOGLKTP7   OPENS  A B D'
COM 'D 61645-61646  BAXTER 7-DOGLKTP7   OPENS  A B C'
COM '-------------------------------------------------------'
CONTINGENCY '617'
TRIP LINE FROM BUS 61642 TO BUS 62896 CKT 1
TRIP LINE FROM BUS 62896 TO BUS 61639 CKT 1
TRIP LINE FROM BUS 61639 TO BUS 62895 CKT 1
TRIP LINE FROM BUS 62895 TO BUS 61646 CKT 1
TRIP LINE FROM BUS 61644 TO BUS 61646 CKT 1
TRIP LINE FROM BUS 61645 TO BUS 61646 CKT 1
END
COM ' 620 Defined as a multi-terminal'
COM 'A 61615-61614  ARROWHD4-98LTAP 4  CKT 1   OPENS B C D E F'
COM 'B 61625-61614  BLCKBRY4-98LTAP 4  CKT 1   OPENS A C D E F'
COM 'C 61616-61614  HILLTOP4-98LTAP 4  CKT 1   OPENS A B D E F'
COM 'D 61616-61576  HILLTOP4-HILLPJCT  CKT 1   OPENS A B C E F'
COM 'E 61576-61672  HILLPJCT-HILLTOP7  CKT 1   OPENS A B C D F'
COM 'F 61576-61577  HILLPJCT-HILLPTR9  CKT 1   OPENS A B C D E'
COM '-------------------------------------------------------'
CONTINGENCY '620'
TRIP LINE FROM BUS 61615 TO BUS 61614 CKT 1
TRIP LINE FROM BUS 61625 TO BUS 61614 CKT 1
TRIP LINE FROM BUS 61616 TO BUS 61614 CKT 1
TRIP LINE FROM BUS 61616 TO BUS 61576 CKT 1
TRIP LINE FROM BUS 61576 TO BUS 61672 CKT 1
TRIP LINE FROM BUS 61576 TO BUS 61577 CKT 1
END
COM '625  Defined as multi-terminal'
COM 'A 61623-61624  MINNTAC4-FORBES 4  CKT 1   OPENS  B C D'
COM 'B 61623-61558  MINNTAC4-MINT1JCT  CKT 1   OPENS  A C D'
COM 'C 61558-61710  MINT1JCT-MINNTAC7  CKT 1   OPENS  A B D'
COM 'D 61558-61559  MINT1JCT-MINT1TR9  CKT 1   OPENS  A B C'
COM '-------------------------------------------------------'
CONTINGENCY '625'
TRIP LINE FROM BUS 61623 TO BUS 61624 CKT 1
TRIP LINE FROM BUS 61623 TO BUS 61558 CKT 1
TRIP LINE FROM BUS 61558 TO BUS 61710 CKT 1
TRIP LINE FROM BUS 61558 TO BUS 61559 CKT 1
END
COM '630 Defined as multi-terminal line, GRE'
COM 'A 61655-61656 CROMWLL7-MAHTOWA7 CKT 1   OPENS B C'
COM 'B 61656-61664 MAHTOWA7-WRENSHL7 CKT 1   OPENS A C'
COM 'C 61664-61665 WRENSHL7-THOMSON7 CKT 1   OPENS A B'
COM ' See multi-terminal 685 below'
COM '-------------------------------------------------------'
CONTINGENCY '630'
TRIP LINE FROM BUS 61655 TO BUS 61656 CKT 1
TRIP LINE FROM BUS 61656 TO BUS 61664 CKT 1
TRIP LINE FROM BUS 61664 TO BUS 61665 CKT 1
END
COM '635 GRE Defined as multi-terminal line'
COM 'A 61655-62636 CROMWLL7-MCGREGR7 CKT 1   OPENS B C D E'
COM 'B 62636-62637 MCGREGR7-KIMBRLY7 CKT 1   OPENS A C D E'
COM 'C 62637-62638 KIMBRLY7-AITKIN 7 CKT 1   OPENS A B D E'
COM 'D 61654-62638 AITKNMN7-AITKIN 7 CKT 1   OPENS A B C E'
COM 'E 61653-61654 RIVERTN7-AITKNMN7 CKT 1   OPENS A B C D'
COM '-------------------------------------------------------'
CONTINGENCY '635'
TRIP LINE FROM BUS 61655 TO BUS 62636 CKT 1
TRIP LINE FROM BUS 62636 TO BUS 62637 CKT 1
TRIP LINE FROM BUS 62637 TO BUS 62638 CKT 1
TRIP LINE FROM BUS 61654 TO BUS 62638 CKT 1
TRIP LINE FROM BUS 61653 TO BUS 61654 CKT 1
END
```

```
COM '640  Defined as multi-terminal line, GRE'
COM 'A 62425-60156 WILLMAR7-PYNSVIL7 CKT 1   OPENS B'
COM 'B 62425-62427 WILLMAR7-WILLMAR8 CKT 1   OPENS A'
COM 'C 62425-62005 WILLMAR7-KERKHOT7 CKT 1   see cont 690, mtl'
COM '-------------------------------------------------------'
CONTINGENCY 640'
COM 'Fault at Wilmarth, between Wilmarth'
COM 'and Paynesville 115 kV'
TRIP LINE FROM BUS 62425 TO BUS 62427 CKT 1
TRIP LINE FROM BUS 62425 TO BUS 62005 CKT 1
END
COM '650  GRE Defined as multi-terminal line'
COM 'A 62090-60205 PARKWD 7-CRKEDLK7 CKT 1   OPENS B'
COM 'B 62090-62132 PARKWD 7-PARKWD 8 CKT 1   OPENS A'
COM '-------------------------------------------------------'
CONTINGENCY '650'
TRIP LINE FROM BUS 62090 TO BUS 60205 CKT 1
TRIP LINE FROM BUS 62090 TO BUS 62132 CKT 1
END
COM '655  GRE Defined as multi-terminal line'
COM 'A 62924-60206 MEDINA 7-CROWRVR7 CKT 1   OPENS B'
COM 'B 62924-62951 MEDINA 7-MEDINA 8 CKT 1   OPENS A'
COM '-------------------------------------------------------'
CONTINGENCY '655'
TRIP LINE FROM BUS 62924 TO BUS 60206 CKT 1
TRIP LINE FROM BUS 62924 TO BUS 62951 CKT 1
END
COM '660  GRE Defined as multi-terminal line'
COM 'A 63043-63046 ELK RIV4-BUNKER 4 CKT 1   OPENS B'
COM 'B 63043-62134 ELK RIV4-ELKR14S8 CKT 1   OPENS A'
COM '-------------------------------------------------------'
CONTINGENCY '660'
TRIP LINE FROM BUS 63043 TO BUS 63046 CKT 1
TRIP LINE FROM BUS 63043 TO BUS 62134 CKT 2
END
COM '665  GRE Defined as multi-terminal line'
COM 'A 63043-60152 ELK RIV4-MNTCELO4 CKT 1   OPENS B'
COM 'B 63043-62134 ELK RIV4-ELKRI4S8 CKT 1   OPENS A'
COM '-------------------------------------------------------'
CONTINGENCY '665'
TRIP LINE FROM BUS 63043 TO BUS 60152 CKT 1
TRIP LINE FROM BUS 63043 TO BUS 62134 CKT 1
END
COM 'CONTINGENCY 670 GRE Defined as multi-circuit, tower'
COM 'REVIEWED BY XCEL ENERGY 7/2002'
COM 'A 60160-60202  SHERCO 3-COON CK3 CKT 1   OPENS B, C,     tower'
COM 'B 63031-60160  BUNKER 3-SHERCO 3 CKT 1   OPENS A, C mtl, tower'
COM 'C 63031-60202  BUNKER 3-COON CK3 CKT 1   OPENS A, B mtl, tower'
COM '**GRE Defined as multi-terminal'
COM 'A 60160-60202  SHERCO 3-COON CK3 CKT 1   OPENS D E F'
COM 'D 61487-60655  CNCMID2Y-CNCTER29 CKT 1   OPENS A E F'
COM 'E 61487-60203  CNCMID2Y-COON CK7 CKT 1   OPENS A D F'
COM 'F 61487-60202  CNCMID2Y-COON CK3 CKT 1   OPENS A D E'
COM '**GRE Defined as multi-terminal '
COM 'B 63031-60160  BUNKER 3-SHERCO 3 CKT 1   OPENS C G H I'
COM 'C 63031-60202  BUNKER 3-COON CK3 CKT 1   OPENS B G H I'
COM 'G 63046-63083  BUNKER 4-BUNKER Y CKT 1   OPENS B C H I'
COM 'H 63031-63083  BUNKER 3-BUNKER Y CKT 1   OPENS B C G I'
COM 'I 63083-63076  BUNKER Y-BUNKER T CKT 1   OPENS B C G H'
COM '-------------------------------------------------------'
CONTINGENCY '670 1'
COM 'Tower outage with resulting multi-terminal'
TRIP LINE FROM BUS 60160 TO BUS 60202 CKT 1
TRIP LINE FROM BUS 63031 TO BUS 60160 CKT 1
TRIP LINE FROM BUS 63031 TO BUS 60202 CKT 1
TRIP LINE FROM BUS 60202 TO BUS 61487 CKT 10
TRIP LINE FROM BUS 61487 TO BUS 60203 CKT 10
TRIP LINE FROM BUS 61487 TO BUS 60655 CKT 10
TRIP LINE FROM BUS 63046 TO BUS 63031 CKT 1
END
CONTINGENCY '670 2'
```

```
COM 'Valid multi-terminal only'
TRIP LINE FROM BUS 63031 TO BUS 60160 CKT 1
TRIP LINE FROM BUS 63031 TO BUS 60202 CKT 1
TRIP LINE FROM BUS 63046 TO BUS 63031 CKT 1
END
CONTINGENCY '670 3'
COM 'Valid multi-terminal only'
TRIP LINE FROM BUS 60160 TO BUS 60202 CKT 1
TRIP LINE FROM BUS 60202 TO BUS 61487 CKT 10
TRIP LINE FROM BUS 61487 TO BUS 60203 CKT 10
TRIP LINE FROM BUS 61487 TO BUS 60655 CKT 10
END
COM ' 675 Defined as multi-terminal'
COM 'A 63045-63087 BENTON 4-BENTON Y CKT 1   OPENS B C D E F G'
COM 'B 63045-63088 BENTON 4-BENTON2Y CKT 2   OPENS A C D E F G'
COM 'C 60142-60160 BENTON 3-SHERCO 3 CKT 1   OPENS A B D E F G'
COM 'D 60142-63087 BENTON 3-BENTON Y CKT 1   OPENS A B C E F G'
COM 'E 60142-63088 BENTON 3-BENTON2Y CKT 2   OPENS A B C D F G'
COM 'F 63087-63075 BENTON Y-BENTON T CKT 1   OPENS A B C D E G'
COM 'G 63088-63079 BENTON2Y-BENTON2T CKT 2   OPENS A B C D E F'
COM '-------------------------------------------------------'
CONTINGENCY '675'
TRIP LINE FROM BUS 63045 TO BUS 60142 CKT 2
TRIP LINE FROM BUS 63045 TO BUS 60142 CKT 1
TRIP LINE FROM BUS 60142 TO BUS 60160 CKT 1
END
COM '680  GRE Defined as multi-terminal line'
COM 'A 63045-60143 BENTON 4-BENTON 7 CKT 1   OPENS B'
COM 'B 63045-62297 BENTON 4-BENTON 8 CKT 1   OPENS A'
COM '-------------------------------------------------------'
CONTINGENCY '680'
COM **
COM TRIP LINE FROM BUS 63045 TO BUS 60143 CKT P5
TRIP LINE FROM BUS 63045 TO BUS 60143 CKT 5
COM **
TRIP LINE FROM BUS 63045 TO BUS 62297 CKT 1
END
COM '685  Defined as multi-terminal line, GRE'
COM 'A 61655-62470 CROMWLL7-CROMWLL8 CKT 1   OPENS B C'
COM 'B 61655-61656 CROMWLL7-MAHTOWA7 CKT 1   OPENS A C'
COM 'C 61655-62636 CROMWLL7-MCGREGR7 CKT 1   OPENS A B'
COM '-------------------------------------------------------'
CONTINGENCY '685'
COM 'Simulates a fault on the transformer'
TRIP LINE FROM BUS 61655 TO BUS 62470 CKT 1
TRIP LINE FROM BUS 61655 TO BUS 61656 CKT 1
TRIP LINE FROM BUS 61655 TO BUS 62636 CKT 1
END
COM '  690 Defined as multi-terminal, GRE'
COM 'A 62425-62005 WILLMAR7-KERKHOT7   OPENS B C D'
COM 'B 60357-62005 MAYNARD7-KERKHOT7   OPENS A C D'
COM 'C 62005-62006 KERKHOT7-KERKHO 7   OPENS A B D'
COM 'D 62006-62001 KERKHO 7-BENSON 7   OPENS A B C'
COM '-------------------------------------------------------'
CONTINGENCY '690'
TRIP LINE FROM BUS 62425 TO BUS 62005 CKT 1
TRIP LINE FROM BUS 60357 TO BUS 62005 CKT 1
TRIP LINE FROM BUS 62005 TO BUS 62006 CKT 1
TRIP LINE FROM BUS 62006 TO BUS 62001 CKT 1
END
COM ' 695 Defined as multi-terminal'
COM 'A 62925-62926 DICKNSN7-DCKSNSS7   OPENS B C'
COM 'B 62926-60155 DCKSNSS7-PULASKI7   OPENS A C'
COM 'C 60153-60155 MNTCELO7-PULASKI7   OPENS A B'
COM '-------------------------------------------------------'
CONTINGENCY '695      '
TRIP LINE FROM BUS 62925 TO BUS 62926 CKT 1
TRIP LINE FROM BUS 62926 TO BUS 60155 CKT 1
TRIP LINE FROM BUS 62927 TO BUS 60153 CKT 1
TRIP LINE FROM BUS 62927 TO BUS 60155 CKT 1
END
```

```
COM 'CONTINGENCY 700  Defined as multi-circuit'
COM 'REVIEWED BY XCEL ENERGY 7/2002'
COM 'A 60105-60192  PR ISLD3-BLUE LK3   OPENS  B  tower'
COM 'B 60192-60217  BLUE LK3-INVRHLS3   OPENS  A  tower MTL C D'
COM 'C 60217-60236  INVRHLS3-REDROCK3   MTL B D'
COM 'D 60217 60218  INVRHLS3-INVRHLS7   VLD SLG'
COM '-------------------------------------------------------'
CONTINGENCY '700 1'
TRIP LINE FROM BUS 60105 TO BUS 60192 CKT 1
TRIP LINE FROM BUS 60192 TO BUS 60217 CKT 1
TRIP LINE FROM BUS 60217 TO BUS 60236 CKT 1
TRIP LINE FROM BUS 60217 TO BUS 60218 CKT 9
END
CONTINGENCY '700 2'
COM ' Multi-terminal portion only'
TRIP LINE FROM BUS 60192 TO BUS 60217 CKT 1
TRIP LINE FROM BUS 60217 TO BUS 60236 CKT 1
TRIP LINE FROM BUS 60217 TO BUS 60218 CKT 9
END
COM '705  Defined as multi-circuit, tower, mtl'
COM 'A 60192-60233  BLUE LK3-PARKERS3   OPENS  B or C tower'
COM 'B 60192-60262  BLUE LK3-EDEN PR3   OPENS  A      tower MTL'
COM 'C 60233-60262  PARKERS3-EDEN PR3   OPENS  A      tower MTL'
COM '**    Defined as multi-terminal'
COM 'B 60192-60262  BLUE LK3-EDEN PR3   OPENS  B'
COM 'D 60262-60263  EDEN PR3-EDEN PR7   OPENS  B'
COM '**    Defined as multi-terminal'
COM 'C 60233-60262  PARKERS3-EDEN PR3   OPENS  E'
COM 'E 60262-60263  EDEN PR3-EDEN PR7   OPENS  C'
COM '-------------------------------------------------------'
CONTINGENCY '705 1'
COM 'Tower with resulting multi-terminal'
TRIP LINE FROM BUS 60192 TO BUS 60233 CKT 1
TRIP LINE FROM BUS 60192 TO BUS 60262 CKT 1
COM 'Also trips the following because of B'
TRIP LINE FROM BUS 60262 TO BUS 60263 CKT 10
END
CONTINGENCY '705 2'
COM 'Tower with resulting multi-terminal'
TRIP LINE FROM BUS 60192 TO BUS 60233 CKT 1
TRIP LINE FROM BUS 60233 TO BUS 60262 CKT 1
COM 'Also trips the following because of C'
TRIP LINE FROM BUS 60262 TO BUS 60263 CKT 9
END
CONTINGENCY '705 3'
COM 'Valid Multi-terminal only'
TRIP LINE FROM BUS 60192 TO BUS 60262 CKT 1
TRIP LINE FROM BUS 60262 TO BUS 60263 CKT 10
END
CONTINGENCY '705 4'
COM 'Valid Multi-terminal only'
TRIP LINE FROM BUS 60233 TO BUS 60262 CKT 1
TRIP LINE FROM BUS 60262 TO BUS 60263 CKT 9
END
COM '710 Defined as multi-terminal, tower'
COM ' Multi-terminal trips A and B'
COM 'A 62925-62667  DICKNSN7-ST BONI7   OPENS B C'
COM 'B 62667-60277  ST BONI7-WWACNIA7   OPENS A C'
COM 'D 62667-63016 ST BONI7-ST BONI   OPENS A B'
COM ' A and B multi-curcuit tower with portions of C'
COM 'C 62925-60206  DICKNSN7-CROWRVR7'
COM '-------------------------------------------------------'
COM 'mtl outage portion'
CONTINGENCY '710 1'
TRIP LINE FROM BUS 62925 TO BUS 62667 CKT 1
TRIP LINE FROM BUS 62667 TO BUS 60277 CKT 1
END
COM 'mtl, tower outage portion'
CONTINGENCY '710 2'
TRIP LINE FROM BUS 62925 TO BUS 60206 CKT 1
TRIP LINE FROM BUS 62925 TO BUS 62667 CKT 1
```

```
TRIP LINE FROM BUS 62667 TO BUS 60277 CKT 1
END
COM 'CONTINGENCY 715'
COM 'Reviewed by Xcel Energy 7/2002'
COM '715 NSP Defined as multi-circuit, RW, tower'
COM 'A 60200-62666  BLK DOG7-GLNDALE7          OPENS  DorE RW MTL'
COM 'B 62666-60243  GLNDALE7-SCOTTAP7          OPENS  EorForG RW MTL'
COM 'C 60243-60244  SCOTTAP7-SCOTTCO7          OPENS  G RW MTL'
COM 'D 60190-60242  BLK DOG7-SAVAGE 7          OPENS  A RW MTL'
COM 'E 60242-62669  SAVAGE 7-EAGLECRK          OPENS  AorB RW MTL'
COM 'F 62669-60189  EAGLECRK-SHAKOPE7          OPENS  B RW MTL'
COM 'G 60189-60244  SHAKOPE7-SCOTTCO7          OPENS  BorC RW MTL'
COM '**    Defined as multi-terminal'
COM 'A 60200-62666  BLK DOG7-GLNDALE7          OPENS  H'
COM 'H 62666-62672  GLNDALE7-GLENDALE69 CKT 2   OPENS  A'
COM 'B 62666-60243  GLNDALE7-SCOTTAP7          OPENS  I C J K L'
COM 'I 62666-62672  GLNDALE7-GLENDALE69 CKT 1   OPENS  B C J K L'
COM 'C 60243-60244  SCOTTAP7-SCOTTCO7          OPENS  B I J K L'
COM 'J 60243-60194  SCOTTAP7-CARVRCO7          OPENS  B I C K L'
COM 'K  60194-60931  CARVRCO7-CARVRCO8               VLD SLG'
COM 'D 60190-60242  BLK DOG7-SAVAGE 7           VLD SLG'
COM 'E 60242-62669  SAVAGE 7-EAGLECRK          OPENS  F G'
COM 'F 62669-60189  EAGLECRK-SHAKOPE7         OPENS  E G'
COM 'G 60189-60244  SHAKOPE7-SCOTTCO7          OPENS  E F'
COM 'L 60194-60277  CARVRCO7- WWACNIA7'
COM '-------------------------------------------------------'
CONTINGENCY '715 1'
COM 'RW A&D with associated MTLs'
TRIP LINE FROM BUS 60200 TO BUS 62666 CKT 1
TRIP LINE FROM BUS 60190 TO BUS 60242 CKT 1
TRIP LINE FROM BUS 62666 TO BUS 62672 CKT 2
END
CONTINGENCY '715 2'
COM 'RW B&E with associated MTLs'
TRIP LINE FROM BUS 62666 TO BUS 60243 CKT 1
TRIP LINE FROM BUS 60242 TO BUS 62669 CKT 1
TRIP LINE FROM BUS 62666 TO BUS 62672 CKT 1
TRIP LINE FROM BUS 60243 TO BUS 60244 CKT 1
TRIP LINE FROM BUS 60243 TO BUS 60194 CKT 1
TRIP LINE FROM BUS 60194 TO BUS 60931 CKT 1
TRIP LINE FROM BUS 62669 TO BUS 60189 CKT 1
TRIP LINE FROM BUS 60189 TO BUS 60244 CKT 1
TRIP LINE FROM BUS 60194 TO BUS 60277 CKT 1
END
CONTINGENCY '715 3'
COM 'MTL with A'
TRIP LINE FROM BUS 60200 TO BUS 62666 CKT 1
TRIP LINE FROM BUS 62666 TO BUS 62672 CKT 2
END
CONTINGENCY '715 4'
COM 'MTL with B'
TRIP LINE FROM BUS 62666 TO BUS 60243 CKT 1
TRIP LINE FROM BUS 62666 TO BUS 62672 CKT 1
TRIP LINE FROM BUS 60243 TO BUS 60244 CKT 1
TRIP LINE FROM BUS 60243 TO BUS 60194 CKT 1
TRIP LINE FROM BUS 60194 TO BUS 60931 CKT 1
TRIP LINE FROM BUS 60194 TO BUS 60277 CKT 1
END
CONTINGENCY '715 5'
COM 'MTL A with D'
TRIP LINE FROM BUS 60200 TO BUS 62666 CKT 1
TRIP LINE FROM BUS 60242 TO BUS 62669 CKT 1
TRIP LINE FROM BUS 62669 TO BUS 60189 CKT 1
TRIP LINE FROM BUS 60189 TO BUS 60244 CKT 1
TRIP LINE FROM BUS 62666 TO BUS 62672 CKT 1
END
CONTINGENCY '715 5'
COM 'MTL with E'
TRIP LINE FROM BUS 60242 TO BUS 62669 CKT 1
TRIP LINE FROM BUS 62669 TO BUS 60189 CKT 1
TRIP LINE FROM BUS 60189 TO BUS 60244 CKT 1
```

```
END
COM 'CONTINGENCY 720'
COM 'REVIEWED BY XCEL ENERGY 7/2002'
COM '720  Defined as multi-circuit, tower'
COM 'A 60211-60234  GLESNLK7-PARKERS7  1   OPENS  B  tower'
COM 'B 60211-60234  GLENSLK7-PARKERS7  2   OPENS  A  tower'
COM '-------------------------------------------------------'
CONTINGENCY '720 1'
TRIP LINE FROM BUS 60211 TO BUS 60234 CKT 1
TRIP LINE FROM BUS 60211 TO BUS 60234 CKT 2
END
COM '725 GRE Defined as multi-terminal line'
COM 'A 63040-63048 BLAINE 4-RUSH CY4 CKT 1   OPENS B C'
COM 'B 63040-62293 BLAINE 4-BLAINE 8 CKT 1   OPENS A C'
COM 'C 63040-63046 BLAINE 4-BUNKER 4 CKT 1   OPEND A B'
COM '---------------------------------------------------------'
CONTINGENCY '725'
TRIP LINE FROM BUS 63040 TO BUS 63057 CKT 1
TRIP LINE FROM BUS 63057 TO BUS 63048 CKT 1
TRIP LINE FROM BUS 63048 TO BUS 62293 CKT 1
TRIP LINE FROM BUS 63040 TO BUS 63046 CKT 1
END
COM 'CONTINGENCY 735  Defined as multi-circuit'
COM 'REVIEWED BY XCEL ENERGY 7/2002'
COM 'A 60297-60298  OSPREY 7-PARKFLS7     OPENS   B'
COM 'B 60298-69120  PARKFLS7-CRANDPC      OPENS   A'
COM '**   Defined as multi-terminal'
COM 'B 60298-69120  PARKFLS7-CRANDPC      OPENS   C D E'
COM 'C 69120-60340  CRANDPC -PHILIPS7     OPENS   B D E'
COM 'D 60340-69108  PHILIPS7-PHILDPC      OPENS   B C E'
COM 'E 69108-60301  PHILDPC -PRENTCE7     OPENS   B C D'
COM '-------------------------------------------------------'
CONTINGENCY '735 1'
TRIP LINE FROM BUS 60298 TO BUS 60297 CKT 1
TRIP LINE FROM BUS 60298 TO BUS 69120 CKT 1
TRIP LINE FROM BUS 69120 TO BUS 60340 CKT 1
TRIP LINE FROM BUS 60340 TO BUS 69108 CKT 1
TRIP LINE FROM BUS 69108 TO BUS 60301 CKT 1
END
CONTINGENCY '735 2'
TRIP LINE FROM BUS 60298 TO BUS 60297 CKT 1
TRIP LINE FROM BUS 60298 TO BUS 69120 CKT 1
TRIP LINE FROM BUS 69120 TO BUS 60340 CKT 1
TRIP LINE FROM BUS 60340 TO BUS 69108 CKT 1
TRIP LINE FROM BUS 69108 TO BUS 60301 CKT 1
END
COM 'CONTINGENCY 740  Defined as multi-circuit, tower'
COM 'REVIEWED BY XCEL ENERGY 7/2002'
COM 'A 60103-63071  CANNFLS5-SPRNGCK5   OPENS  B  tower MTL'
COM 'B 60106-63071  PR ISLD5-SPRNGCK5   OPENS  A  tower'MTL
COM '**    Defined as multi-terminal'
COM 'A 60103-63071  CANNFLS5-SPRNGCK5   OPENS  C D'
COM 'C 60103-60104  CANNFLS5-CANNFLS7   VLD SGL'
COM 'D 63071-62387 CKT 1  SPRNGCRK5-SPRNGCK8 #1  VLD SGL'
COM '** Defined as multi-terminal'
COM 'B 60106-63071  PR ISLD5-SPRNGCK5   OPENS E'
COM 'E 63071-62387 CKT 2 SPRNGCRK5-SPRNGCK8 #2  VLD SGL'
COM '-------------------------------------------------------'
CONTINGENCY '740 1'
TRIP LINE FROM BUS 60103 TO BUS 63071 CKT 1
TRIP LINE FROM BUS 60106 TO BUS 62224 CKT 1
TRIP LINE FROM BUS 62224 TO BUS 63071 CKT 1
COM 'Also trips the following because of A'
TRIP LINE FROM BUS 60103 TO BUS 60104 CKT 5
TRIP LINE FROM BUS 63071 TO BUS 62387 CKT 1
TRIP LINE FROM BUS 63071 TO BUS 62387 CKT 2
END
CONTINGENCY '740 2'
TRIP LINE FROM BUS 60103 TO BUS 63071 CKT 1
TRIP LINE FROM BUS 60103 TO BUS 60104 CKT 5
TRIP LINE FROM BUS 63071 TO BUS 62387 CKT 1
```

```
END
CONTINGENCY '740 3'
TRIP LINE FROM BUS 60106 TO BUS 62224 CKT 1
TRIP LINE FROM BUS 62224 TO BUS 63071 CKT 1
TRIP LINE FROM BUS 63071 TO BUS 62387 CKT 2
END
COM 'CONTINGENCY 745  Defined as multi-terminal'
COM 'REVIEWED BY XCEL ENERGY 7/2002'
COM 'A 60156-60162  PYNSVIL7-WAKEFLD7   OPENS  B C'
COM 'B 60162-62616  WAKEFLD7-BIGSWAN7      VLD SGL'
COM 'C 60162-60706  WAKEFLD7-WAKEFLD9   OPENS A B'
COM '-------------------------------------------------------'
CONTINGENCY '745'
TRIP LINE FROM BUS 60156 TO BUS 60162 CKT 1
TRIP LINE FROM BUS 60162 TO BUS 62615 CKT 1
TRIP LINE FROM BUS 62615 TO BUS 62616 CKT 1
TRIP LINE FROM BUS 60162 TO BUS 60706 CKT 2
END
COM 'CONTINGENCY 750  Defined as multi-terminal'
COM 'REVIEWED BY XCEL ENERGY 7/2002'
COM 'A 61647-62817 LONG PR7-LITTLE S7 CKT 1 OPEN B C'
COM 'B 62817-60144 LITTLE S7-DGLASCO7 CKT 1 OPENS A C'
COM 'C 60144-60749 DGLASCO7-DGLAS C8 CKT 1 VLD SGL'
COM '-------------------------------------------------------'
CONTINGENCY '750'
TRIP LINE FROM BUS 61647 TO BUS 62817 CKT 1
TRIP LINE FROM BUS 62817 TO BUS 60144 CKT 1
TRIP LINE FROM BUS 60144 TO BUS 60749 CKT 1
END
COM 'CONTINGENCY 755 Defined as multi-terminal'
COM 'REVIEWED BY XCEL ENERGY 7/2002'
COM 'A 60166-60158  SALIDA 7-STCLTP 7 CKT 1   OPENS A C'
COM 'B 60157-60158  STCLOUD7-STCLTP 7 CKT 1   OPENS A B'
COM 'C 62815-60158  I94PARK7-STCLTP 7 CKT 1   OPENS A B'
COM '-------------------------------------------------------'
CONTINGENCY '755'
COM **
COM TRIP LINE FROM BUS 60166 TO BUS 60601 CKT 1
COM TRIP LINE FROM BUS 60601 TO BUS 60158 CKT 1
TRIP LINE FROM BUS 60166 TO BUS 60158 CKT 1
COM **
TRIP LINE FROM BUS 60157 TO BUS 60158 CKT 1
TRIP LINE FROM BUS 62815 TO BUS 60158 CKT 1
END
COM 'CONTINGENCY 756 IS NOT APPLICABLE TO MODEL - FUTURE FACILITIES'
COM 'REVIEWED BY XCEL ENERGY 7/2002'
COM '756 Defined as multi-terminal'
COM 'A 62815-62816  I94PARK7-STAUGST7 CKT 1   OPENS B C D'
COM 'B 60162-60159  WAKEFLD7-STCLTPW7 CKT 1   OPENS A C D'
COM 'C 60157-60159  STCLOUD7-STCLTPW7 CKT 1   OPENS A B D'
COM 'D 62816-60159  STAUGST7-STCLTPW7 CKT 1   OPENS A B C'
COM '-------------------------------------------------------'
COM 'CONTINGENCY '756'
COM 'TRIP LINE FROM BUS 62815 TO BUS 62816 CKT 1'
COM 'TRIP LINE FROM BUS 60162 TO BUS 60159 CKT 1'
COM 'TRIP LINE FROM BUS 60157 TO BUS 60159 CKT 1'
COM 'TRIP LINE FROM BUS 62816 TO BUS 60159 CKT 1'
COM 'END'
COM 'CONTINGENCY 760  Defined as multi-circuit, tower'
COM 'REVIEWED BY XCEL ENERGY 7/2002'
COM 'A 60105-60236  PR ISLD3-REDROCK3  1   OPENS  B'
COM 'B 60105-60236  PR ISLD3-REDROCK3  2   OPENS  A'
COM '-------------------------------------------------------'
CONTINGENCY '760'
TRIP LINE FROM BUS 60105 TO BUS 60236 CKT 1
TRIP LINE FROM BUS 60105 TO BUS 60236 CKT 2
END
COM 'CONTINGENCY 765  Defined as multi-terminal'
COM 'REVIEWED BY XCEL ENERGY 7/2002'
COM 'A 63048-60237  RUSH CY4-REDROCK4   OPENS  B C'
COM 'B 60236-60237  REDROCK3-REDROCK4   OPENS  A C'
```

```
COM 'C 60361-63048  ROCKCR 4-RUSH CY4   OPENS  A B'
COM '-------------------------------------------------------'
CONTINGENCY '765'
TRIP LINE FROM BUS  63048 TO BUS  60237 CKT 1
TRIP LINE FROM BUS  60236 TO BUS  60237 CKT 5
TRIP LINE FROM BUS  60361 TO BUS  63048 CKT 1
END
COM 'CONTINGENCY 770  Defined as multi-terminal'
COM 'REVIEWED BY XCEL ENERGY 7/2002'
COM 'A 60109-60110  WILMART5-WILMART7   OPENS  B C'
COM 'B 60109-60120  WILMART5-BLUEART5   OPENS  A C'
COM 'C 60120-34009  BLUEETA5-WINBAGO5   OPENS  A B'
COM '-------------------------------------------------------'
CONTINGENCY '770'
TRIP LINE FROM BUS 60109 TO BUS 60110 CKT 5
TRIP LINE FROM BUS 60109 TO BUS 60120 CKT 1
TRIP LINE FROM BUS 60120 TO BUS 34009 CKT 1
END
COM 'CONTINGENCY 775  Defined as multi-terminal'
COM 'REVIEWED BY XCEL ENERGY 7/2002'
COM 'A 61650-60163 LITTLEF7-WST CLD7      VLD SGL'
COM 'B 60154-60163 SAUK RV7-WST CLD7      A C D '
COM 'C 60165-60164 MEI INT7-XRDS   7      A B D '
COM 'D 60165-60163 MEI INT7-WST CLD7      A B C '
COM '-------------------------------------------------------'
CONTINGENCY '775'
TRIP LINE FROM BUS 61650 TO BUS 62268 CKT 1
TRIP LINE FROM BUS 62268 TO BUS 62819 CKT 1
TRIP LINE FROM BUS 60163 TO BUS 62819 CKT 1
TRIP LINE FROM BUS 60154 TO BUS 60163 CKT 1
TRIP LINE FROM BUS 60165 TO BUS 60164 CKT 1
TRIP LINE FROM BUS 60165 TO BUS 62814 CKT 1
TRIP LINE FROM BUS 62814 TO BUS 60163 CKT 1
END
COM 'CONTINGENCY 780  Defined as multi-circuit, tower'
COM 'REVIEWED BY XCEL ENERGY 7/2002'
COM 'A 60143-60146  BENTON 7-GRANCTY7   OPENS  B       tower'
COM 'B 60143-60348  BENTON 7-BENCTP7   OPENS  A       tower, MTL'
COM '** Defined as multi-terminal'
COM 'B 60143-60348  BENTON 7-BENCTP7   C D '
COM 'C 60348-60146 BENCTP7-GRANCTY7    B D  '
COM 'D 60348-60157 BENCTP7-STCLOUD7    C D  '
COM '-------------------------------------------------------'
CONTINGENCY '780 1'
TRIP LINE FROM BUS 60143 TO BUS 60146 CKT 1
TRIP LINE FROM BUS 60143 TO BUS 60348 CKT 1
TRIP LINE FROM BUS 60348 TO BUS 60146 CKT 1
TRIP LINE FROM BUS 60348 TO BUS 60157 CKT 1
END
CONTINGENCY '780 2'
TRIP LINE FROM BUS 60143 TO BUS 60348 CKT 1
TRIP LINE FROM BUS 60348 TO BUS 60146 CKT 1
TRIP LINE FROM BUS 60348 TO BUS 60157 CKT 1
END
COM 'CONTINGENCY 785  Defined as multi-terminal'
COM 'REVIEWED BY XCEL ENERGY 7/2002'
COM 'A 60129-60128  SPLIT R7-SPLIT R5   OPENS  B C D E F'
COM 'B 60128-34003  SPLIT R5-MAGNLIA5   OPENS  A C D E F'
COM 'C 34003-34004  MAGNLIA5-ELK    5   OPENS  A B D E F'
COM 'D 34004-34005  ELK     -HRN LK 5   OPEND  A B C E F'
COM 'E 34005-34225  HRN LK 5-HERONLK8 CKT 1'
COM '-------------------------------------------------------'
CONTINGENCY '785'
TRIP LINE FROM BUS 60129 TO BUS 60128 CKT 6
COM **
COM TRIP LINE FROM BUS 60128 TO BUS 34904 CKT 1
COM TRIP LINE FROM BUS 34904 TO BUS 34003 CKT 1
TRIP LINE FROM BUS 60128 TO BUS 60370 CKT 1
TRIP LINE FROM BUS 60370 TO BUS 34003 CKT 1
COM **
TRIP LINE FROM BUS 34003 TO BUS 34004 CKT 1
```

```
TRIP LINE FROM BUS 34004 TO BUS 62709 CKT 1
TRIP LINE FROM BUS 62709 TO BUS 34005 CKT 1
TRIP LINE FROM BUS 34005 TO BUS 34225 CKT 1
END
COM 'CONTINGENCY 790'
COM 'REVIEWED BY XCEL ENERGY 7/2002'
COM '790  Defined as multi-terminal'
COM 'A 66550-60147  GRANITF4-MINVALY4     OPENS  B'
COM 'B 60147-60148  MINVALY4-MINVALY7  1   OPENS  A'
COM '-------------------------------------------------------'
CONTINGENCY '790'
TRIP LINE FROM BUS 66550 TO BUS 60147 CKT 1
TRIP LINE FROM BUS 60147 TO BUS 60148 CKT 5
END
COM 'CONTINGENCY 795  Defined as multi-terminal'
COM 'REVIEWED BY XCEL ENERGY 7/2002'
COM 'A 66550-60150  GRANITF4-MNVLTAP4   OPENS  B C D E'
COM 'B 60148-60149  MINVALY7-MINVALT4   OPENS  A C D E'
COM 'C 60150-63054  MNVLTAP4-PANTHER4   OPENS  A B D E'
COM 'D 60149-60150  MINVALT4-MNVLTAP4   OPENS  A B C E'
COM 'E 63054-60742  PANTHER4-PANTHER8   OPENS  A B C D'
COM '--------------------------------------------------------'
CONTINGENCY '795'
TRIP LINE FROM BUS 66550 TO BUS 60150 CKT 1
TRIP LINE FROM BUS 60148 TO BUS 60149 CKT 6
TRIP LINE FROM BUS 60150 TO BUS 63054 CKT 1
TRIP LINE FROM BUS 60149 TO BUS 60150 CKT 1
TRIP LINE FROM BUS 63054 TO BUS 60742 CKT 1
END
COM '800  Defined as multi-terminal'
COM  Wilton 230/115 kV
COM 'A 63345-63186   WILTON 4-WILTON Y   OPENS B C D '
COM 'B 63186-63245   WILTON Y-WILTON 7   OPENS A C D'
COM 'C 63186-63343   WILTON Y-WILTON19   OPENS A B D
COM 'D 66758-63345   WINGER 4-WILTON 4   OPENS A B C
COM '--------------------------------------------------------'
CONTINGENCY '800 1'
TRIP LINE FROM BUS 63345 TO BUS 63186 CKT 1
TRIP LINE FROM BUS 63186 TO BUS 63245 CKT 1
TRIP LINE FROM BUS 63186 TO BUS 63343 CKT 1
TRIP LINE FROM BUS 66758 TO BUS 63345 CKT 1
END
COM 'CONTINGENCY 805  Defined as multi-terminal'
COM 'REVIEWED BY XCEL ENERGY 7/2002'
COM 'A 60187-60176  AS KING7-BAYTOWN7   OPENS  B C'
COM 'B 60224-60176  LONG LK7-BAYTOWN7   OPENS  A C'
COM 'C 60222-60224  KOLMNLK7-LONG LK7      VLD SGL'
COM '-------------------------------------------------------'
CONTINGENCY '805'
TRIP LINE FROM BUS 60187 TO BUS 60176 CKT 1
TRIP LINE FROM BUS 60222 TO BUS 60224 CKT 1
TRIP LINE FROM BUS 60224 TO BUS 60176 CKT 1
END
COM 'CONTINGENCY 810  Defined as multi-terminal'
COM 'REVIEWED BY XCEL ENERGY 7/2002'
COM 'A 60189-62980 BLK DOG4-MCLEOD 4   OPENS  B'
COM 'B 60189-60190 BLK DOG4-BLK DOG7   OPENS  A'
COM '-------------------------------------------------------'
COM CONTINGENCY '810'
COM TRIP LINE FROM BUS 60189 TO BUS 62980 CKT 1
COM TRIP LINE FROM BUS 60189 TO BUS 60190 CKT C1
COM END
COM 'CONTINGENCY 811  Defined as multi-terminal'
COM 'REVIEWED BY XCEL ENERGY 7/2002'
COM 'A 60107-62865 W FARIB7-AIRTECH7   OPENS  B C'
COM 'B 62865- 5998 AIRTECH7-RICEGEN7             '
COM 'A  5998-62234 RICEGEN7-W FARIB7   OPENS  B C'
COM 'C 60276-62234 AIRLAKE7-LKMARN 7   OPENS  A B'
COM '-------------------------------------------------------'
COM CONTINGENCY '811'
COM TRIP LINE FROM BUS 60107 TO BUS 62865 CKT 1
```

```
COM TRIP LINE FROM BUS 62865 TO BUS  5998 CKT 1
COM TRIP LINE FROM BUS  5998 TO BUS 62234 CKT 1
COM TRIP LINE FROM BUS 60276 TO BUS 62234 CKT 1
COM END
COM '815  Defined as multi-terminal'
COM 'A 62225-62226 BURNVIL7-FISCHER7   OPENS  B C D'
COM 'B 62226-60343 FISCHER7-WILLPIP7   OPENS  A C D'
COM 'C 60343-62228 WILLPIP7-APPVLTW7   OPENS  A B D'
COM 'D 62228-62227 APPVLTW7-JOHNCAK7   OPENS  A B C'
COM '-------------------------------------------------------'
CONTINGENCY '815'
TRIP LINE FROM BUS 62225 TO BUS 62226 CKT 1
TRIP LINE FROM BUS 62226 TO BUS 60343 CKT 1
TRIP LINE FROM BUS 60343 TO BUS 62228 CKT 1
TRIP LINE FROM BUS 62228 TO BUS 62227 CKT 1
END
COM 'CONTINGENCY 820  Defined as multi-terminal'
COM 'REVIEWED BY XCEL ENERGY 7/2002'
COM 'A 60218 TO  60271  INVRHLS7-RICHVLY7   OPENS  B C'
COM 'B 60271 TO  60247  RICHVLY7-LINDE  7   OPENS  A C'
COM 'C 60247 TO  60201  LINDE  7-CHEMOLT7   OPENS  A B'
COM '-------------------------------------------------------'
CONTINGENCY '820'
TRIP LINE FROM BUS 60218 TO BUS 60271 CKT 1
TRIP LINE FROM BUS 60271 TO BUS 60247 CKT 1
TRIP LINE FROM BUS 60247 TO BUS 60201 CKT 1
END
COM 'CONTINGENCY 825 DEFINED AS MULTI-TERMINAL'
COM 'SPLIT BUS SCENARIO AT THE ADAMS 345/161 SUBSTATION'
COM 'A 61950-63032  BYRON  3-PL VLLY3  OPENS B C D E
COM 'B 63032-60102  PL VLLY3-ADAMS  3  OPENS C D E
COM 'C 60102-34014  ADAMS  3-ADAMS  5  OPENS B D E
COM 'D 34014-34570  ADAMS  5-ADAMS N5  OPENS B C E
COM 'E 34014-34572  ADAMS  5-ADAMS S5  OPENS B C D
CONTINGENCY '825 1'
COM 'Trip PVS - BYRON THEN TRANSFER TRIP PVS - ADAMS AND SPLITS 161KV BUS'
TRIP LINE FROM BUS   61950 TO BUS 63032 CKT 1
TRIP LINE FROM BUS   63032 TO BUS 60102 CKT 1
TRIP LINE FROM BUS   60102 TO BUS 34014 CKT 1
END
COM
COM  SPLIT BUS SCENARIO AT THE ADAMS 345/161 SUBSTATION
CONTINGENCY '825 2'
COM 'Trip PVS - ADAMS THEN SPLIT 161KV BUS AND OPEN 345/161 TRANSFORMER'
TRIP LINE FROM BUS   63032 TO BUS 60102 CKT 1
TRIP LINE FROM BUS   60102 TO BUS 34014 CKT 1
END
COM 'CONTINGENCY 830  Defined as multi-terminal'
COM 'REVIEWED BY XCEL ENERGY 7/2002'
COM 'A 60238-68966 REDROCK7-GLENMONT CKT 1   OPENS  B C D'
COM 'B 60327-60330 T RIVFL7-CRYSTAL7 CKT 1   OPENS  A C D'
COM 'C 60327-60328 T RIVFL7-RIV FLS7 CKT 1   OPENS  A B D'
COM 'D 60327-68966 T RIVFL7-GLENMONT CKT 1   OPENS  A B C'
COM '-------------------------------------------------------'
CONTINGENCY '830'
TRIP LINE FROM BUS 60238 TO BUS 68966 CKT 1
TRIP LINE FROM BUS 60327 TO BUS 61244 CKT 1
TRIP LINE FROM BUS 61244 TO BUS 60330 CKT 1
TRIP LINE FROM BUS 60327 TO BUS 60328 CKT 1
TRIP LINE FROM BUS 60327 TO BUS 68966 CKT 1
END
COM 'CONTINGENCY 835  Defined as multi-terminal'
COM 'REVIEWED BY XCEL ENERGY 7/2002'
COM 'A 60282-60319 R CEDAR5-WHEATTP5 CKT 1   OPENS  B C D'
COM 'B 60319-60318 WHEATTP5-WHEATON5 CKT 1   OPENS  A C D'
COM 'C 60319-60320 WHEATTP5-HYDROLN5 CKT 1   OPENS  A B D'
COM 'D 60320-60321 HYDROLN5-HYDROLN7 CKT 1   OPENS  A B C'
COM '-------------------------------------------------------'
CONTINGENCY '835'
COM 'Fault between Wheaton Tap and Red Cedar/Hydro Lane'
TRIP LINE FROM BUS 60282 TO BUS 60319 CKT 1
```

```
TRIP LINE FROM BUS 60319 TO BUS 60318 CKT 1
TRIP LINE FROM BUS 60319 TO BUS 60320 CKT 1
TRIP LINE FROM BUS 60320 TO BUS 60321 CKT 1
END
COM 'CONTINGENCY 845  Defined as multi-terminal'
COM 'REVIEWED BY XCEL ENERGY 7/2002'
COM 'A 60306-60322  HOLCOMB7-CORNELL7   OPENS  B C'
COM 'B 69157-60322  ANDERSN7-CORNELL7   OPENS  A C'
COM 'C 60326-69157  JIMFLS 7-ANDERSN7   OPENS  A B'
COM '-------------------------------------------------------'
CONTINGENCY '845'
TRIP LINE FROM BUS 60306 TO BUS 60322 CKT 1
TRIP LINE FROM BUS 69157 TO BUS 60322 CKT 1
TRIP LINE FROM BUS 60326 TO BUS 69157 CKT 1
END
COM '850 Defined as multi-terminal'
COM 'A 60313-60312  PINE LK7-PINE LK5      OPENS B C D E'
COM 'B 60329-60314  CRYSTAL5-PINELKT5      OPENS A C D E'
COM 'C 69565-60314  APL RVR5-PINELKT5      OPENS A B D E'
COM 'D 60312-60314  PINE LK5-PINELKT5      OPENS A B C E'
COM 'E 69565-69007  APL RVR5-APLRVR 8      OPENS A B C D
COM '-------------------------------------------------------'
CONTINGENCY '850'
TRIP LINE FROM BUS 60313 TO BUS 60312 CKT 3
TRIP LINE FROM BUS 60329 TO BUS 60314 CKT 1
TRIP LINE FROM BUS 69565 TO BUS 60314 CKT 1
TRIP LINE FROM BUS 60312 TO BUS 60314 CKT 1
TRIP LINE FROM BUS 69565 TO BUS 69007 CKT 1
END
COM '855  Defined as multi-terminal'
COM 'A 63216-62003  ORTONVL7-GRACEVT7   OPENS  B C'
COM 'B 66555-62003  MORRIS 7-GRACEVT7   OPENS  A C'
COM 'C 62003-62004  GRACEVT7-GRACEV 7   OPENS  A B'
COM '-------------------------------------------------------'
COM CONTINGENCY '855'
COM 'Trip of A or B or C'
COM TRIP LINE FROM BUS 63216 TO BUS 62003 CKT 1
COM TRIP LINE FROM BUS 66555 TO BUS 62003 CKT 1
COM TRIP LINE FROM BUS 62003 TO BUS 62004 CKT 1
COM END                                                                    << COMMENTED OUT
COM '860  Defined as multi-terminal'
COM 'A 66555-63218  MORRIS 7-MOROTP 7 CKT 1   OPENS B C D E'
COM 'B 63218-62002  MOROTP 7-WALDON 7 CKT 1   OPENS A C D E'
COM 'C 62002-62001  WALDON 7-BENSON 7 CKT 1   OPENS A B C D'
COM 'D 62001-62013  BENSON 7-BENSON 9 CKT 1   OPENS A B C E'
com 'E 62001-62006  BENSON 7-KERKHO 7 CKT 1   OPENS A B C D'
COM '-------------------------------------------------------'
CONTINGENCY '860'
TRIP LINE FROM BUS 66555 TO BUS 63218 CKT 1
TRIP LINE FROM BUS 63218 TO BUS 62002 CKT 1
TRIP LINE FROM BUS 62002 TO BUS 62027 CKT 1
TRIP LINE FROM BUS 62027 TO BUS 62001 CKT 1
TRIP LINE FROM BUS 62001 TO BUS 62013 CKT 1
TRIP LINE FROM BUS 62001 TO BUS 62006 CKT 1
END
COM '865   Defined as multi-terminal, otp'
COM 'A 63331-63051  FERGSFL4-HENNING4 CKT 1   OPENS  B C'
COM 'B 63051-63052  HENNING4-INMAN  4 CKT 1   OPENS  A C'
COM 'C 63051-62573  HENNING4-HENNING9 CKT 1   OPENS  A B'
COM '-------------------------------------------------------'
CONTINGENCY '865'
TRIP LINE FROM BUS 63331 TO BUS 63366 CKT 1
TRIP LINE FROM BUS 63366 TO BUS 63051 CKT 1
TRIP LINE FROM BUS 63051 TO BUS 63052 CKT 1
TRIP LINE FROM BUS 63051 TO BUS 62573 CKT 1
END
COM '866   Defined as multi-terminal, otp'
COM 'A 63052-61611  INMAN  4-WINGRIV4 CKT 1   OPENS  B'
COM 'B 63052-1956   INMAN  4-HENNING4 CKT 1   OPENS  A'
COM '-------------------------------------------------------'
COM CONTINGENCY '866'
```

```
COM TRIP LINE FROM BUS 63052 TO BUS 61611 CKT 1  'COMMENTED OUT AS  BUS 1956 NO LONGER EXIST'
COM TRIP LINE FROM BUS 63052 TO BUS 1956 CKT 1   'BOB ENDAHL 7-24-02'
COM END
COM ' '
COM ' '
COM ' '
COM ' '
COM '  END MINNESOTA AREA CONTINGENCIES'
COM ' '
COM ' '
COM ' '
COM '  START WISCONSIN AREA CONTINGENCIES'
COM ' '
COM ' '
COM 'CONTINGENCY 875  Defined as multi-circuit, RW'
COM 'REVIEWED BY XCEL ENERGY 7/2002'
COM 'A 60302-60308  COULEE 5-LACROSS5 CKT 1   OPENS  B       RW'
COM 'B 69523-69535  GENOA  5-LAC TAP5 CKT 1   OPENS  A       RW'
COM '**    Defined as multi-terminal'
COM 'C 60308-69535 LACROSS5-LAC TAP5 CKT 1   OPENS D E'
COM 'D 60309-69535 MRSHLND5-LAC TAP5 CKT 1   OPENS C E'
COM 'E 69523-69535 GENOA  5-LAC TAP5 CKT 1   OPENS C D'
COM '-------------------------------------------------------'
CONTINGENCY '875 1'
TRIP LINE FROM BUS 60302 TO BUS 60308 CKT 1
TRIP LINE FROM BUS 69523 TO BUS 69535 CKT 1
COM 'Also trips the following because of B'
TRIP LINE FROM BUS 60308 TO BUS 69535 CKT 1
TRIP LINE FROM BUS 60309 TO BUS 69535 CKT 1
END
CONTINGENCY '875 2'
COM 'Multi-terminal portion'
TRIP LINE FROM BUS 60308 TO BUS 69535 CKT 1
TRIP LINE FROM BUS 60309 TO BUS 69535 CKT 1
TRIP LINE FROM BUS 69523 TO BUS 69535 CKT 1
END
COM '880  Defined as  tower'
COM 'A 69523-69527 GENOA  5-HARMONY5 CKT 1   OPENS  B  tower'
COM 'B 69523-34021 GENOA  5-LANSING5 CKT 1   OPENS  A  tower'
COM '-------------------------------------------------------'
CONTINGENCY '880'
TRIP LINE FROM BUS 69523 TO BUS 69527 CKT 1
TRIP LINE FROM BUS 69523 TO BUS 34021 CKT 1
END
COM '885  Defined as multi-terminal'
COM 'A 69507-69511 SENECA 5-BELLCTR5 CKT 1   OPENS  B'
COM 'B 69507-69523 SENECA 5-GENOA  5 CKT 1   OPENS  A'
COM '-------------------------------------------------------'
CONTINGENCY '885'
TRIP LINE FROM BUS 69507 TO BUS 69511 CKT 1
TRIP LINE FROM BUS 69507 TO BUS 69523 CKT 1
END
COM 'CONTINGENCY 886  Defined as multi-terminal'
COM 'REVIEWED BY XCEL ENERGY 7/2002'
COM 'A 60316-60311  TREMVAL5-MAYFAIR5 CKT 1   OPENS  B'
COM 'B 60311-60308  MAYFAIR5-LACROSS5 CKT 1   OPENS  A'
COM '-------------------------------------------------------'
CONTINGENCY '886'
TRIP LINE FROM BUS 60316 TO BUS 60311 CKT 1
TRIP LINE FROM BUS 60311 TO BUS 60308 CKT 1
END
COM 'CONTINGENCY 887  Defined as multi-terminal'
COM 'REVIEWED BY XCEL ENERGY'
COM 'A 60305-60317  EAU CLR5-WHEATON5 CKT 1   OPENS  B C'
COM 'B 60317-69551  WHEATON5-ELK MND5 CKT 1   OPENS  B C'
COM '-------------------------------------------------------'
CONTINGENCY '887'
TRIP LINE FROM BUS 60317 TO BUS 61200 CKT 1
TRIP LINE FROM BUS 60305 TO BUS 61200 CKT 1
TRIP LINE FROM BUS 60317 TO BUS 69551 CKT 1
END
```

```
COM 'CONTINGENCY 888  Defined as common tower'
COM 'REVIEWED BY XCEL ENERGY 7/2002'
COM 'A 60285-60321  EAGLEPT7-HYDROLN7 CKT 1   OPENS  B'
COM 'B 60321-60326  HYDROLN7-JIMFLS 7 CKT 1   OPENS  A'
COM '-------------------------------------------------------'
CONTINGENCY '888'
TRIP LINE FROM BUS 60285 TO BUS 60321 CKT 1
TRIP LINE FROM BUS 60321 TO BUS 60326 CKT 1
END
COM 'CONTINGENCY 889  Defined as common tower'
COM 'REVIEWED BY XCEL ENERGY 7/2002'
COM 'A 60295-60350  BAYFRNT7-GINGLES7 CKT 1   OPENS  B'
COM 'B 60294-60293  GINGLES5-FRMSINN5 CKT 1   OPENS  A'
COM '-------------------------------------------------------'
CONTINGENCY '889'
TRIP LINE FROM BUS 60295 TO BUS 60350 CKT 1
TRIP LINE FROM BUS 60294 TO BUS 60293 CKT 1
END
COM 'CONTINGENCY 890  Defined as common tower'
COM 'REVIEWED BY XCEL ENERGY 7/2002'
COM 'A 60187-60325  AS KING7-WILOWRV7 CKT 1   OPENS  B'
COM 'B 60325-60313  WILOWRV7-PINE LK7 CKT 1   OPENS  A'
COM '-------------------------------------------------------'
CONTINGENCY '890'
TRIP LINE FROM BUS 60187 TO BUS 60325 CKT 1
TRIP LINE FROM BUS 60325 TO BUS 60313 CKT 1
END
COM 'CONTINGENCY 891  Defined as multi-terminal'
COM 'REVIEWED BY XCEL ENERGY 7/2002'
COM 'A 60321-60315  HYDROLN7-T-CRNRS7 CKT 1   OPENS  B'
COM 'B 60315-60666  T-CRNRS7-T CORNE8 CKT 1   OPENS  A'
COM '-------------------------------------------------------'
CONTINGENCY '891'
TRIP LINE FROM BUS 60321 TO BUS 60315 CKT 1
TRIP LINE FROM BUS 60315 TO BUS 60666 CKT 1
END
COM 'CONTINGENCY 892 Defined as multi-terminal'
COM 'REVIEWED BY XCEL ENERGY 7/2002'
COM 'A 60325-60313   WILOWRV7-PINE LK7 OPENS B'
COM 'B 60325-61023 2 PINE LK7-PINE LK8  VLD SGL'
CONTINGENCY '892'
TRIP LINE FROM BUS 60325 TO BUS 60313 CKT 1
TRIP LINE FROM BUS 60313 TO BUS 61023 CKT 1
END
COM ' '
COM '  END WISCONSIN AREA CONTINGENCIES'
COM
COM  ***************** Begin Minnesota Power ****************
 CONTINGENCY '11L'
    OPEN BRANCH FROM BUS 61740 TO BUS 62448 CKT 1  /  61740 GR RPDS7 115 62448 HILLCTY7 115 1
    OPEN BRANCH FROM BUS 61653 TO BUS 62448 CKT 1  /  61653 RIVERTN7 115 62448 HILLCTY7 115 1
 END
 CONTINGENCY '128L'
    OPEN BRANCH FROM BUS 61694 TO BUS 62171 CKT 1  /  61694 FINLAND7 115 62171 FINLAND7 115 1
    OPEN BRANCH FROM BUS 61692 TO BUS 61694 CKT 1  /  61692 SLVRBAY7 115 61694 FINLAND7 115 1
    OPEN BRANCH FROM BUS 61694 TO BUS 61697 CKT 1  /  61694 FINLAND7 115 61697 TAC HBR7 115 1
 END
 CONTINGENCY '132L'
    OPEN BRANCH FROM BUS 61678 TO BUS 61679 CKT 1  /  61678 NEMADJI7 115 61679 GARY   7 115 1
    OPEN BRANCH FROM BUS 61678 TO BUS 61683 CKT 1  /  61678 NEMADJI7 115 61683 STIN-MN7 115 1
 END
 CONTINGENCY '13L'
    OPEN BRANCH FROM BUS 61654 TO BUS 62638 CKT 1  /  61654 AITKNMN7 115 62638 AITKIN 7 115 1
    OPEN BRANCH FROM BUS 61653 TO BUS 61654 CKT 1  /  61653 RIVERTN7 115 61654 AITKNMN7 115 1
    OPEN BRANCH FROM BUS 61673 TO BUS 62445 CKT 1  /  61673 ARROWHD7 115 62445 4CORNRS7 115 1
    OPEN BRANCH FROM BUS 61655 TO BUS 62636 CKT 1  /  61655 CROMWLL7 115 62636 MCGREGR7 115 1
    OPEN BRANCH FROM BUS 62637 TO BUS 62638 CKT 1  /  62637 KIMBRLY7 115 62638 AITKIN 7 115 1
    OPEN BRANCH FROM BUS 62636 TO BUS 62637 CKT 1  /  62636 MCGREGR7 115 62637 KIMBRLY7 115 1
 END
 CONTINGENCY '14L'
    OPEN BRANCH FROM BUS 61724 TO BUS 61731 CKT 1  /  61724 HIBBING7 115 61731 14L TAP7 115 1
```

```
   OPEN BRANCH FROM BUS 61731 TO BUS 61733 CKT 1  /  61731 14L TAP7 115 61733 NATIONL7 115 1
   OPEN BRANCH FROM BUS 61731 TO BUS 61737 CKT 1  /  61731 14L TAP7 115 61737 NASHWAK7 115 1
END
CONTINGENCY '15L'
   OPEN BRANCH FROM BUS 61665 TO BUS 61666 CKT 1  /  61665 THOMSON7 115 61666 FONDULAC 115 1
   OPEN BRANCH FROM BUS 61666 TO BUS 61676 CKT 1  /  61666 FONDULAC 115 61676 HIBBARD7 115 1
END
CONTINGENCY '16L'
   OPEN BRANCH FROM BUS 61718 TO BUS 61720 CKT 1  /  61718 16L TAP7 115 61720 COTTNTP7 115 1
   OPEN BRANCH FROM BUS 61718 TO BUS 61721 CKT 1  /  61718 16L TAP7 115 61721 ETCO   7 115 1
   OPEN BRANCH FROM BUS 61718 TO BUS 62454 CKT 1  /  61718 16L TAP7 115 62454 PEARY  7 115 1
   OPEN BRANCH FROM BUS 61673 TO BUS 62447 CKT 1  /  61673 ARROWHD7 115 62447 BERGNTP7 115 1
   OPEN BRANCH FROM BUS 61720 TO BUS 62447 CKT 1  /  61720 COTTNTP7 115 62447 BERGNTP7 115 1
   OPEN BRANCH FROM BUS 61708 TO BUS 62454 CKT 1  /  61708 VIRGNIA7 115 62454 PEARY  7 115 1
   OPEN BRANCH FROM BUS 61720 TO BUS 62452 CKT 1  /  61720 COTTNTP7 115 62452 COTTON 7 115 1
END
CONTINGENCY '20L'
   OPEN BRANCH FROM BUS 61779 TO BUS 61781 CKT 1  /  61779 BLANDIN7 115 61781 20L TAP7 115 1
   OPEN BRANCH FROM BUS 61739 TO BUS 61781 CKT 1  /  61739 BLCKBRY7 115 61781 20L TAP7 115 1
   OPEN BRANCH FROM BUS 61740 TO BUS 61781 CKT 1  /  61740 GR RPDS7 115 61781 20L TAP7 115 1
END
CONTINGENCY '25L'
   OPEN BRANCH FROM BUS 61706 TO BUS 61724 CKT 1  /  61706 KEWTNTP7 115 61724 HIBBING7 115 1
   OPEN BRANCH FROM BUS 61706 TO BUS 61707 CKT 1  /  61706 KEWTNTP7 115 61707 MNTACT27 115 1
   OPEN BRANCH FROM BUS 61707 TO BUS 61708 CKT 1  /  61707 MNTACT27 115 61708 VIRGNIA7 115 1
END
CONTINGENCY '26L'
   OPEN BRANCH FROM BUS 61655 TO BUS 61656 CKT 1  /  61655 CROMWLL7 115 61656 MAHTOWA7 115 1
   OPEN BRANCH FROM BUS 61664 TO BUS 61665 CKT 1  /  61664 WRENSHL7 115 61665 THOMSON7 115 1
   OPEN BRANCH FROM BUS 61656 TO BUS 61664 CKT 1  /  61656 MAHTOWA7 115 61664 WRENSHL7 115 1
END
CONTINGENCY '27L'
   OPEN BRANCH FROM BUS 61778 TO BUS 61779 CKT 1  /  61778 BLNDTAP7 115 61779 BLANDIN7 115 1
   OPEN BRANCH FROM BUS 61748 TO BUS 61778 CKT 1  /  61748 BOSWELL7 115 61778 BLNDTAP7 115 1
END
CONTINGENCY '28L'
   OPEN BRANCH FROM BUS 61782 TO BUS 61790 CKT 1  /  61782 28L TAP7 115 61790 COHSSTTP 115 1
   OPEN BRANCH FROM BUS 61737 TO BUS 61782 CKT 1  /  61737 NASHWAK7 115 61782 28L TAP7 115 1
   OPEN BRANCH FROM BUS 61748 TO BUS 61782 CKT 1  /  61748 BOSWELL7 115 61782 28L TAP7 115 1
   OPEN BRANCH FROM BUS 61790 TO BUS 61791 CKT 1  /  61790 COHSSTTP 115 61791 LAKEHD 7 115 1
   OPEN BRANCH FROM BUS 61780 TO BUS 61791 CKT 1  /  61780 DEER RV7 115 61791 LAKEHD 7 115 1
END
CONTINGENCY '34L'
   DISCONNECT BUS 61704  / 34 L TAP7
END
CONTINGENCY '37L'
   OPEN BRANCH FROM BUS 61722 TO BUS 61734 CKT 1  /  61722 FORBES 7 115 61734 IRON TP7 115 1
   OPEN BRANCH FROM BUS 61734 TO BUS 62453 CKT 1  /  61734 IRON TP7 115 62453 IRON   7 115 1
   OPEN BRANCH FROM BUS 61734 TO BUS 61735 CKT 1  /  61734 IRON TP7 115 61735 TBIRD S7 115 1
   OPEN BRANCH FROM BUS 61708 TO BUS 61735 CKT 1  /  61708 VIRGNIA7 115 61735 TBIRD S7 115 1
END
CONTINGENCY '39L'
   OPEN BRANCH FROM BUS 61736 TO BUS 62451 CKT 1  /  61736 T-BIRD 7 115 62451 LAKELND7 115 1
   OPEN BRANCH FROM BUS 61702 TO BUS 62451 CKT 1  /  61702 LASKIN 7 115 62451 LAKELND7 115 1
   OPEN BRANCH FROM BUS 61708 TO BUS 61736 CKT 1  /  61708 VIRGNIA7 115 61736 T-BIRD 7 115 1
END
CONTINGENCY '42L'
   OPEN BRANCH FROM BUS 61688 TO BUS 61689 CKT 1  /  61688 COLBYVL7 115 61689 FRNCHRV7 115 1
   OPEN BRANCH FROM BUS 61689 TO BUS 62172 CKT 1
   OPEN BRANCH FROM BUS 62172 TO BUS 61690 CKT 1
   OPEN BRANCH FROM BUS 61691 TO BUS 61692 CKT 1  /  61691 SLVRBYH7 115 61692 SLVRBAY7 115 1
   OPEN BRANCH FROM BUS 61690 TO BUS 62170 CKT 1  /  61690 TWO HBR7 115 62170 WALDO  7 115 1
   OPEN BRANCH FROM BUS 61691 TO BUS 62170 CKT 1  /  61691 SLVRBYH7 115 62170 WALDO  7 115 1
END
CONTINGENCY '44L'
   OPEN BRANCH FROM BUS 61722 TO BUS 61725 CKT 1  /  61722 FORBES 7 115 61725 44L TAP7 115 1
   OPEN BRANCH FROM BUS 61724 TO BUS 61725 CKT 1  /  61724 HIBBING7 115 61725 44L TAP7 115 1
   OPEN BRANCH FROM BUS 61725 TO BUS 61728 CKT 1  /  61725 44L TAP7 115 61728 HIBBTAC7 115 1
END
CONTINGENCY '46L'
   OPEN BRANCH FROM BUS 61650 TO BUS 62175 CKT 1  /  61650 LITTLEF7 115 62175 DEWING 7 115 1
```

```
   OPEN BRANCH FROM BUS 61651 TO BUS 62175 CKT 1  /  61651 MUDLAKE7 115 62175 DEWING 7 115 1
END
CONTINGENCY '48L'
   OPEN BRANCH FROM BUS 61640 TO BUS 62410 CKT 1  /  61640 BADOURA7 115 62410 PALMRLK7 115 1
   OPEN BRANCH FROM BUS 61641 TO BUS 62410 CKT 1  /  61641 HUBBARD7 115 62410 PALMRLK7 115 1
END
CONTINGENCY '51L'
   OPEN BRANCH FROM BUS 61648 TO BUS 62176 CKT 1  /  61648 PEQUOT 7 115 62176 MERRFLD7 115 1
   OPEN BRANCH FROM BUS 61653 TO BUS 62176 CKT 1  /  61653 RIVERTN7 115 62176 MERRFLD7 115 1
END
CONTINGENCY '71L'
   OPEN BRANCH FROM BUS 61673 TO BUS 61687 CKT 1  /  61673 ARROWHD7 115 61687 MIDWAY 7 115 1
   OPEN BRANCH FROM BUS 61686 TO BUS 61687 CKT 1  /  61686 15TH AV7 115 61687 MIDWAY 7 115 1
END
CONTINGENCY '726L'
   OPEN BRANCH FROM BUS 61784 TO BUS 82365 CKT 1  /  61784 INTPHAS7 118 82365 FT FRANC 118 1
   OPEN BRANCH FROM BUS 61752 TO BUS 61784 CKT 1  /  61752 I.FALLS7 118 61784 INTPHAS7 118 1
END
CONTINGENCY '761L'
   OPEN BRANCH FROM BUS 60292 TO BUS 61632 CKT 1  /  60292 IRONRIV7 115 61632 DAHLBRG7 115 1
   OPEN BRANCH FROM BUS 61632 TO BUS 61684 CKT 1  /  61632 DAHLBRG7 115 61684 STIN-WI7 115 1
END
CONTINGENCY '762L'
   OPEN BRANCH FROM BUS 60290 TO BUS 61631 CKT 1  /  60290 ST LAKE5 161 61631 MINONG 5 161 1
   OPEN BRANCH FROM BUS 61630 TO BUS 61631 CKT 1  /  61630 STINSON5 161 61631 MINONG 5 161 1
END
CONTINGENCY '78L'
   OPEN BRANCH FROM BUS 61722 TO BUS 61730 CKT 1  /  61722 FORBES 7 115 61730 78L TAP7 115 1
   OPEN BRANCH FROM BUS 61728 TO BUS 61730 CKT 1  /  61728 HIBBTAC7 115 61730 78L TAP7 115 1
   OPEN BRANCH FROM BUS 61730 TO BUS 61733 CKT 1  /  61730 78L TAP7 115 61733 NATIONL7 115 1
END
CONTINGENCY '8L'
   OPEN BRANCH FROM BUS 61803 TO BUS 62404 CKT 1  /  61803 THOM46 946.0 62404 FOND DU946.0 1
   OPEN BRANCH FROM BUS 61665 TO BUS 61803 CKT 1  /  61665 THOMSON7 115 61803 THOM46 946.0 1
END
CONTINGENCY '91L-99L-64L'
   OPEN BRANCH FROM BUS 61610 TO BUS 61794 CKT 1  /  61610 BADOURA4 230 61794 BADOUJCT 115 1
   OPEN BRANCH FROM BUS 61610 TO BUS 63053 CKT 1  /  61610 BADOURA4 230 63053 HUBBARD4 230 1
   OPEN BRANCH FROM BUS 61610 TO BUS 61612 CKT 1  /  61610 BADOURA4 230 61612 RIVERTN4 230 1
END
CONTINGENCY '97L'
   OPEN BRANCH FROM BUS 61611 TO BUS 61798 CKT 1  /  61611 WINGRIV4 230 61798 WINGRJCT 115 1
   OPEN BRANCH FROM BUS 61613 TO BUS 61798 CKT 1  /  61613 WINGRIV7 115 61798 WINGRJCT 115 1
   OPEN BRANCH FROM BUS 61798 TO BUS 61799 CKT 1  /  61798 WINGRJCT 115 61799 WINGRTR913.8 1
   OPEN BRANCH FROM BUS 61611 TO BUS 61612 CKT 1  /  61611 WINGRIV4 230 61612 RIVERTN4 230 1
END
CONTINGENCY '98L'
   OPEN BRANCH FROM BUS 61614 TO BUS 61615 CKT 1  /  61614 98L TAP4 230 61615 ARROWHD4 230 1
   OPEN BRANCH FROM BUS 61614 TO BUS 61625 CKT 1  /  61614 98L TAP4 230 61625 BLCKBRY4 230 1
   OPEN BRANCH FROM BUS 61614 TO BUS 61616 CKT 1  /  61614 98L TAP4 230 61616 HILLTOP4 230 1
END
CONTINGENCY '9L'
   OPEN BRANCH FROM BUS 61670 TO BUS 61671 CKT 1  /  61670 MDWLNDS7 115 61671 BURNETT7 115 1
   OPEN BRANCH FROM BUS 61668 TO BUS 61671 CKT 1  /  61668 CLOQUET7 115 61671 BURNETT7 115 1
   OPEN BRANCH FROM BUS 61663 TO BUS 61739 CKT 1  /  61663 FLDWDTP7 115 61739 BLCKBRY7 115 1
   OPEN BRANCH FROM BUS 61663 TO BUS 61669 CKT 1  /  61663 FLDWDTP7 115 61669 FLDWOOD7 115 1
   OPEN BRANCH FROM BUS 61663 TO BUS 61670 CKT 1  /  61663 FLDWDTP7 115 61670 MDWLNDS7 115 1
END
CONTINGENCY 'ARROWHD 6T'
   OPEN BRANCH FROM BUS 61554 TO BUS 61615 CKT 1  /  61554 AWHD1JCT 115 61615 ARROWHD4 230 1
   OPEN BRANCH FROM BUS 61554 TO BUS 61673 CKT 1  /  61554 AWHD1JCT 115 61673 ARROWHD7 115 1
   OPEN BRANCH FROM BUS 61554 TO BUS 61555 CKT 1  /  61554 AWHD1JCT 115 61555 AWHD1TR913.8 1
END
CONTINGENCY 'ARROWHD 7T'
   OPEN BRANCH FROM BUS 61556 TO BUS 61615 CKT 2  /  61556 AWHD2JCT 115 61615 ARROWHD4 230 2
   OPEN BRANCH FROM BUS 61556 TO BUS 61673 CKT 2  /  61556 AWHD2JCT 115 61673 ARROWHD7 115 2
   OPEN BRANCH FROM BUS 61556 TO BUS 61557 CKT 2  /  61556 AWHD2JCT 115 61557 AWHD2TR913.8 2
END
CONTINGENCY 'BADOURA 1T'
   OPEN BRANCH FROM BUS 61610 TO BUS 61794 CKT 1  /  61610 BADOURA4 230 61794 BADOUJCT 115 1
   OPEN BRANCH FROM BUS 61610 TO BUS 63053 CKT 1  /  61610 BADOURA4 230 63053 HUBBARD4 230 1
```

```
   OPEN BRANCH FROM BUS 61610 TO BUS 61612 CKT 1  /  61610 BADOURA4 230 61612 RIVERTN4 230 1
END
CONTINGENCY 'BLAKBERY 1T'
   OPEN BRANCH FROM BUS 61566 TO BUS 61567 CKT 1  /  61566 BLBY1JCT 115 61567 BLBY1TR913.8 1
   OPEN BRANCH FROM BUS 61566 TO BUS 61625 CKT 1  /  61566 BLBY1JCT 115 61625 BLCKBRY4 230 1
   OPEN BRANCH FROM BUS 61566 TO BUS 61739 CKT 1  /  61566 BLBY1JCT 115 61739 BLCKBRY7 115 1
END
CONTINGENCY 'BLAKBERY 2T'
   OPEN BRANCH FROM BUS 61568 TO BUS 61569 CKT 2  /  61568 BLBY2JCT 115 61569 BLBY2TR913.8 2
   OPEN BRANCH FROM BUS 61568 TO BUS 61625 CKT 2  /  61568 BLBY2JCT 115 61625 BLCKBRY4 230 2
   OPEN BRANCH FROM BUS 61568 TO BUS 61739 CKT 2  /  61568 BLBY2JCT 115 61739 BLCKBRY7 115 2
END
CONTINGENCY 'FORBES 1T'
   OPEN BRANCH FROM BUS 61550 TO BUS 61551 CKT 1  /  61550 FORB1JCT 230 61551 FORB1TR934.5 1
   OPEN BRANCH FROM BUS 60101 TO BUS 61550 CKT 1  /  60101 FORBES 2 500 61550 FORB1JCT 230 1
   OPEN BRANCH FROM BUS 61550 TO BUS 61624 CKT 1  /  61550 FORB1JCT 230 61624 FORBES 4 230 1
END
CONTINGENCY 'FORBES 2T'
   OPEN BRANCH FROM BUS 61550 TO BUS 61551 CKT 1  /  61550 FORB1JCT 230 61551 FORB1TR934.5 1
   OPEN BRANCH FROM BUS 60101 TO BUS 61550 CKT 1  /  60101 FORBES 2 500 61550 FORB1JCT 230 1
   OPEN BRANCH FROM BUS 61550 TO BUS 61624 CKT 1  /  61550 FORB1JCT 230 61624 FORBES 4 230 1
   OPEN BRANCH FROM BUS 61564 TO BUS 61565 CKT 2  /  61564 FORB4JCT 115 61565 FORB4TR913.8 2
   OPEN BRANCH FROM BUS 61564 TO BUS 61624 CKT 2  /  61564 FORB4JCT 115 61624 FORBES 4 230 2
   OPEN BRANCH FROM BUS 61564 TO BUS 61722 CKT 2  /  61564 FORB4JCT 115 61722 FORBES 7 115 2
END
CONTINGENCY 'FORBES 3T'
   OPEN BRANCH FROM BUS 61552 TO BUS 61553 CKT 1  /  61552 FORB2JCT 230 61553 FORB2TR934.5 1
   OPEN BRANCH FROM BUS 60101 TO BUS 61552 CKT 1  /  60101 FORBES 2 500 61552 FORB2JCT 230 1
   OPEN BRANCH FROM BUS 61552 TO BUS 61624 CKT 1  /  61552 FORB2JCT 230 61624 FORBES 4 230 1
   OPEN BRANCH FROM BUS 61564 TO BUS 61565 CKT 2  /  61564 FORB4JCT 115 61565 FORB4TR913.8 2
   OPEN BRANCH FROM BUS 61564 TO BUS 61624 CKT 2  /  61564 FORB4JCT 115 61624 FORBES 4 230 2
   OPEN BRANCH FROM BUS 61564 TO BUS 61722 CKT 2  /  61564 FORB4JCT 115 61722 FORBES 7 115 2
END
CONTINGENCY 'FORBES 7T-8'
   OPEN BRANCH FROM BUS 61550 TO BUS 61551 CKT 1  /  61550 FORB1JCT 230 61551 FORB1TR934.5 1
   OPEN BRANCH FROM BUS 60101 TO BUS 61550 CKT 1  /  60101 FORBES 2 500 61550 FORB1JCT 230 1
   OPEN BRANCH FROM BUS 61550 TO BUS 61624 CKT 1  /  61550 FORB1JCT 230 61624 FORBES 4 230 1
   OPEN BRANCH FROM BUS 61552 TO BUS 61553 CKT 1  /  61552 FORB2JCT 230 61553 FORB2TR934.5 1
   OPEN BRANCH FROM BUS 60101 TO BUS 61552 CKT 1  /  60101 FORBES 2 500 61552 FORB2JCT 230 1
   OPEN BRANCH FROM BUS 61552 TO BUS 61624 CKT 1  /  61552 FORB2JCT 230 61624 FORBES 4 230 1
END
CONTINGENCY 'HILLTOP 1T'
   OPEN BRANCH FROM BUS 61614 TO BUS 61625 CKT 1  /  61614 98L TAP4 230 61625 BLCKBRY4 230 1
   OPEN BRANCH FROM BUS 61614 TO BUS 61616 CKT 1  /  61614 98L TAP4 230 61616 HILLTOP4 230 1
   OPEN BRANCH FROM BUS 61576 TO BUS 61616 CKT 1  /  61576 HILTPJCT 115 61616 HILLTOP4 230 1
   OPEN BRANCH FROM BUS 61576 TO BUS 61672 CKT 1  /  61576 HILTPJCT 115 61672 HILLTOP7 115 1
   OPEN BRANCH FROM BUS 61576 TO BUS 61577 CKT 1  /  61576 HILTPJCT 115 61577 HILTPTR913.8 1
END
CONTINGENCY 'LASKIN 1T'
   OPEN BRANCH FROM BUS 61574 TO BUS 61701 CKT 1  /  61574 LASKNJCT 115 61701 LASKIN 6 138 1
   OPEN BRANCH FROM BUS 61574 TO BUS 61702 CKT 1  /  61574 LASKNJCT 115 61702 LASKIN 7 115 1
   OPEN BRANCH FROM BUS 61574 TO BUS 61575 CKT 1  /  61574 LASKNJCT 115 61575 LASKNTR913.8 1
END
CONTINGENCY 'LIL FORK 1T'
   OPEN BRANCH FROM BUS 61751 TO BUS 66753 CKT 1  /  61751 LITLFRK7 118 66753 RUNNING4 230 1
   OPEN BRANCH FROM BUS 60167 TO BUS 66753 CKT 1  /  60167 RUNSWCP4 230 66753 RUNNING4 230 1
END
CONTINGENCY 'MINNTAC 1T'
   OPEN BRANCH FROM BUS 61623 TO BUS 61627 CKT 1  /  61623 MINNTAC4 230 61627 SHANNON4 230 1
   OPEN BRANCH FROM BUS 61558 TO BUS 61623 CKT 1  /  61558 MINT1JCT 115 61623 MINNTAC4 230 1
   OPEN BRANCH FROM BUS 61558 TO BUS 61710 CKT 1  /  61558 MINT1JCT 115 61710 MINNTAC7 115 1
   OPEN BRANCH FROM BUS 61558 TO BUS 61559 CKT 1  /  61558 MINT1JCT 115 61559 MINT1TR913.8 1
END
CONTINGENCY 'MINNTAC 2T'
   OPEN BRANCH FROM BUS 61623 TO BUS 61624 CKT 1  /  61623 MINNTAC4 230 61624 FORBES 4 230 1
   OPEN BRANCH FROM BUS 61560 TO BUS 61623 CKT 2  /  61560 MINT2JCT 115 61623 MINNTAC4 230 2
   OPEN BRANCH FROM BUS 61560 TO BUS 61710 CKT 2  /  61560 MINT2JCT 115 61710 MINNTAC7 115 2
   OPEN BRANCH FROM BUS 61560 TO BUS 61561 CKT 2  /  61560 MINT2JCT 115 61561 MINT2TR913.8 2
END
CONTINGENCY 'MUDLAKE 1T'
   OPEN BRANCH FROM BUS 61578 TO BUS 61617 CKT 1  /  61578 MUDLKJCT 115 61617 MUDLAKE4 230 1
```

```
   OPEN BRANCH FROM BUS 61578 TO BUS 61651 CKT 1  /  61578 MUDLKJCT 115 61651 MUDLAKE7 115 1
   OPEN BRANCH FROM BUS 61578 TO BUS 61579 CKT 1  /  61578 MUDLKJCT 115 61579 MUDLKTR913.8 1
 END
 CONTINGENCY 'RIVERTON 6T'
   OPEN BRANCH FROM BUS 61612 TO BUS 61796 CKT 1  /  61612 RIVERTN4 230 61796 RIVERJCT 115 1
   OPEN BRANCH FROM BUS 61653 TO BUS 61796 CKT 1  /  61653 RIVERTN7 115 61796 RIVERJCT 115 1
   OPEN BRANCH FROM BUS 61796 TO BUS 61797 CKT 1  /  61796 RIVERJCT 115 61797 RIVERTR913.8 1
 END
 CONTINGENCY 'SHANNON 2T'
   OPEN BRANCH FROM BUS 61750 TO BUS 61785 CKT 1  /  61750 SHAN2TR913.8 61785 SHAN2JCT 115 1
   OPEN BRANCH FROM BUS 61627 TO BUS 61785 CKT 1  /  61627 SHANNON4 230 61785 SHAN2JCT 115 1
   OPEN BRANCH FROM BUS 61749 TO BUS 61785 CKT 1  /  61749 SHANNON7 115 61785 SHAN2JCT 115 1
 END
 CONTINGENCY 'STINSON 1T'
   OPEN BRANCH FROM BUS 60290 TO BUS 61631 CKT 1  /  60290 ST LAKE5 161 61631 MINONG 5 161 1
   OPEN BRANCH FROM BUS 61630 TO BUS 61631 CKT 1  /  61630 STINSON5 161 61631 MINONG 5 161 1
 END
 CONTINGENCY 'TACHRBR 1T'
   OPEN BRANCH FROM BUS 61572 TO BUS 61696 CKT 1  /  61572 TACHBJCT 115 61696 TAC HBR6 138 1
   OPEN BRANCH FROM BUS 61572 TO BUS 61697 CKT 1  /  61572 TACHBJCT 115 61697 TAC HBR7 115 1
   OPEN BRANCH FROM BUS 61572 TO BUS 61573 CKT 1  /  61572 TACHBJCT 115 61573 TACHBTR913.8 1
 END
 CONTINGENCY 'WINGRVR 1T'
   OPEN BRANCH FROM BUS 61611 TO BUS 63052 CKT 1  /  61611 WINGRIV4 230 63052 INMAN  4 230 1
   OPEN BRANCH FROM BUS 61611 TO BUS 61612 CKT 1  /  61611 WINGRIV4 230 61612 RIVERTN4 230 1
   OPEN BRANCH FROM BUS 61611 TO BUS 61798 CKT 1  /  61611 WINGRIV4 230 61798 WINGRJCT 115 1
 END

COM  **************** End Minnesota Power *****************

COM *******************************************************
COM ADDED THREE WINDING TRANSFORMERS IN WAPA (AREA 652), OTP (AREA 626)
COM GRE (AREA 618) - 12/17/2006 - ABB
CONTINGENCY 'CENTER 1T'
DISCONNECT BUS 66797
END
CONTINGENCY 'COYOTE 1T'
TRIP LINE FROM BUS 67316 TO BUS 67318 CKT 1
END
CONTINGENCY 'MAPLE RT'
DISCONNECT BUS 66783
END
CONTINGENCY 'MCHENRY T1'
DISCONNECT BUS 63082
END
CONTINGENCY 'RAMSEY T1'
DISCONNECT BUS 63084
END
CONTINGENCY 'WAHPETON T1'
DISCONNECT BUS 63191
END
CONTINGENCY 'WAHPETON T2'
DISCONNECT BUS 63201
END
CONTINGENCY 'AUDUBON T1'
DISCONNECT BUS 63202
END
CONTINGENCY 'WILTON T1'
DISCONNECT BUS 63145
END
CONTINGENCY 'BEMIDJIT'
DISCONNECT BUS 66789
END
CONTINGENCY 'KARLSTAT'
DISCONNECT BUS 66785
END
CONTINGENCY 'HENSEL2Y'
DISCONNECT BUS 63184
END
CONTINGENCY 'HENSEL Y'
DISCONNECT BUS 63192
```

```
END
CONTINGENCY 'BUFFALOY'
DISCONNECT BUS 63198
END
CONTINGENCY 'FORMAN Y'
DISCONNECT BUS 63193
END
CONTINGENCY 'LANGDONT'
DISCONNECT BUS 66784
END
CONTINGENCY 'JAMSTN1Y'
DISCONNECT BUS 63199
END
CONTINGENCY 'JAMSTN2Y'
DISCONNECT BUS 63200
END
CONTINGENCY 'RUGBY  Y'
DISCONNECT BUS 63185
END
CONTINGENCY 'WILTON Y'
DISCONNECT BUS 63186
END
CONTINGENCY 'WINGER Y'
DISCONNECT BUS 63187
END
CONTINGENCY 'PICKERTY'
DISCONNECT BUS 63188
END
CONTINGENCY 'MAPLER1Y'
DISCONNECT BUS 63189
END
CONTINGENCY 'MAPLER2Y'
DISCONNECT BUS 63190
END
CONTINGENCY 'FERGSFLY'
DISCONNECT BUS 63194
END
CONTINGENCY 'BIGSTONY'
DISCONNECT BUS 63195
END
CONTINGENCY 'BEMIDJIY'
DISCONNECT BUS 63196
END
CONTINGENCY 'CASS LKY'
DISCONNECT BUS 63197
END
CONTINGENCY 'WINGER T'
DISCONNECT BUS 66786
END
CONTINGENCY 'WILTON T'
DISCONNECT BUS 66776
END
CONTINGENCY 'WILTON2T'
DISCONNECT BUS 66798
END
CONTINGENCY 'BEMIDJIT'
DISCONNECT BUS 66789
END
CONTINGENCY 'HARVEY Y'
DISCONNECT BUS 63307
END
CONTINGENCY 'ESMOND Y'
DISCONNECT BUS 63306
END
CONTINGENCY 'ROLETTEY'
DISCONNECT BUS 63308
END
CONTINGENCY 'JAMEST2T'
DISCONNECT BUS 66199
END
CONTINGENCY 'GRNDFKST'
```

```
DISCONNECT BUS 66200
END
CONTINGENCY 'JAMEST1T'
DISCONNECT BUS 66207
END
CONTINGENCY 'DAWSONCT'
DISCONNECT BUS 66210
END
CONTINGENCY 'FALLON T'
DISCONNECT BUS 66212
END
CONTINGENCY 'MICTYE1T'
DISCONNECT BUS 66216
END
CONTINGENCY 'BELFELDT'
DISCONNECT BUS 66220
END
CONTINGENCY 'FLANDRUT'
DISCONNECT BUS 66226
END
CONTINGENCY 'SIOUXF1T'
DISCONNECT BUS 66231
END
CONTINGENCY 'SIOUXF2T'
DISCONNECT BUS 66234
END
CONTINGENCY 'WATERT1T'
DISCONNECT BUS 66236
END
CONTINGENCY 'WATERT2T'
DISCONNECT BUS 66238
END
CONTINGENCY 'WATERT3T'
DISCONNECT BUS 66241
END
CONTINGENCY 'MAURIN1T'
DISCONNECT BUS 66246
END
CONTINGENCY 'BERSFRDT'
DISCONNECT BUS 66253
END
CONTINGENCY 'NUNDRWDT'
DISCONNECT BUS 66266
END
CONTINGENCY 'FTTHMP1T'
DISCONNECT BUS 66272
END
CONTINGENCY 'FTTHMP2T'
DISCONNECT BUS 66275
END
CONTINGENCY 'HURON41T'
DISCONNECT BUS 66280
END
CONTINGENCY 'HURON42T'
DISCONNECT BUS 66283
END
CONTINGENCY 'WHITE  T'
DISCONNECT BUS 66292
END
CONTINGENCY 'GRANITFT'
DISCONNECT BUS 66296
END
CONTINGENCY 'SIOUXC1T'
DISCONNECT BUS 66303
END
CONTINGENCY 'SIOUXC2T'
DISCONNECT BUS 66306
END
CONTINGENCY 'SIOUXC3T'
DISCONNECT BUS 66307
END
```

```
CONTINGENCY 'SIOUXC4T'
DISCONNECT BUS 66309
END
CONTINGENCY 'FARGOM14'
DISCONNECT BUS 66440
END
CONTINGENCY 'FARGOM24'
DISCONNECT BUS 66446
END
CONTINGENCY 'GROTONTY'
DISCONNECT BUS 67203
END
CONTINGENCY 'DRAYTO1T'
DISCONNECT BUS 66787
END
CONTINGENCY 'DRAYTO2T'
DISCONNECT BUS 66788
END
CONTINGENCY 'CALEDONT'
DISCONNECT BUS 66772
END
CONTINGENCY 'RUNNINNT'
DISCONNECT BUS 66778
END
CONTINGENCY 'RUNNINST'
DISCONNECT BUS 66779
END
CONTINGENCY 'ULRICH T'
DISCONNECT BUS 66781
END
CONTINGENCY 'TRFALLST'
DISCONNECT BUS 66782
END
CONTINGENCY 'DRAYTO1T'
DISCONNECT BUS 66787
END
CONTINGENCY 'DRAYTO2T'
DISCONNECT BUS 66788
END
CONTINGENCY 'MORANV1T'
DISCONNECT BUS 66790
END
CONTINGENCY 'MORANV2T'
DISCONNECT BUS 66793
END
CONTINGENCY 'MORANV3T'
DISCONNECT BUS 66794
END
CONTINGENCY 'MORANV4T'
DISCONNECT BUS 66795
END
CONTINGENCY 'BASIN TY'
DISCONNECT BUS 67200
END
CONTINGENCY 'LELND1TY'
DISCONNECT BUS 67201
END
CONTINGENCY 'LELND2TY'
DISCONNECT BUS 67202
END
CONTINGENCY 'GROTONTY'
DISCONNECT BUS 67203
END
CONTINGENCY 'BRDLNDTY'
DISCONNECT BUS 67204
END
CONTINGENCY 'STEGALTY'
DISCONNECT BUS 67207
END
CONTINGENCY 'LOGAN TY'
DISCONNECT BUS 67208
```

```
END
CONTINGENCY 'SIDNEYTY'
DISCONNECT BUS 67209
END
CONTINGENCY 'CHARCKTY'
DISCONNECT BUS 67211
END
CONTINGENCY 'DGCX3  T'
DISCONNECT BUS 67230
END
CONTINGENCY 'DGCX3  4'
DISCONNECT BUS 67231
END
CONTINGENCY 'DGCX4  T'
DISCONNECT BUS 67233
END
CONTINGENCY 'WARDT   '
DISCONNECT BUS 67299
END
COM CONTINGENCY 'WAYSD T1'
COM DISCONNECT BUS 65011
COM DISCONNECT BUS 65010
COM END
COM *** END THREE WDG TRANSFORMERS ***

END /* END OF CON FILE
```

APPENDIX D – STABILITY ANALYSIS – CASE SUMMARIES

Appendix D.1: Summary for Case b02-so11aa.sav (Without GI-0616 & GI-0707A)

```
INITIATED AT LOAD FLOW ENTRY POINT ON FRI, OCT 24 2008  10:02

B02-SO11AA.SAV;SUMMER;OP LD;SYSTEM INTACT           :
ND=2080,MH=2171,MW=1528,OHMH=-196,OHMP=150,EWTW=190,BD=165


                    P O W E R   F L O W   S U M M A R Y
-------------------------------------------------------------------------------
               NDEX:      2080 MW         ECL-ARP:  551 MW
               MHEX:      2171 MW         PRI-BYN:  689 MW
               MWEX:      1528 MW         AHD-SLK:  667 MW
               KING-ECL:   860 MW         SLK-GPK:  406 MW
               COOPER S:  1134 MW         WNE-WKS:  563 MW
               FTCAL S:    691 MW         GGS:     1756 MW
               GRIS-LNC:   808 MW         QC WEST:   15 MW

           LOAD LEVELS AS PERCENT OF 2011 SUMMER PEAK:
           NORTH DAKOTA (ZONE 90,990) 2578.3 MW,  76.7% OF  3360.2 MW
           NSP             (AREA 600) 9131.1 MW,  82.0% OF  11140.0 MW
           MAN HYDRO       (AREA 667) 2348.2 MW,  77.2% OF  3043.0 MW

Load/Losses   MW  / MW       Generation        MW       Export            MW
----------- ------ -----     --------------- ------     --------------- ------
Manitoba      2348/ 285      MH total gross    4998     ATC West Import   1136
Ont. total   22150/ 478         Wpg River       568     ATC SW Import      459
     NW        915/  37         7 Sisters       170     ATC SE Import    -1183
Sask.         2150/  82      OH total gross   21884     East Bias          345
MP            2021/ 162         northwest       717     SPC>WAPA (B10T)    165
NSP           9131/ 541      SPC total gross   2406     MH>SPC  (3-230)     61
N. Dakota     2578/ 312      MP total gross    2261     MH>SPC  (FALLS)      0
Manitoba       481 MVARS     ND Cfd AC gross   3282     OH>MH  @Kenora    -196
Ont. total   13082 MVARS              net      3111     OH>MP  @Ft Fran    150
     NW        489 MVARS     NSP East gross    2709     OH E>W @Wawa       190
Sask.          502 MVARS              net      2563     OH>East USA          0
MP             540 MVARS         West gross    3033     F601C  @Forbes    1544
NSP           1921 MVARS              net      2871     D602F  @Dorsey    1790
N. Dakota      583 MVARS         Total net     7247     L20D   @Letell     249
ATC           9855/ 297      WAPA SD Hydro     1497     R50M   @Richer     156
ATC           2952 MVARS     Pleasant Valley      0     G82R   @Glenboro   -25
                             LGS/Trimont         19
                             SW MN Wind        1198
                             N DAK WIND         346
                             Swing Bus          267


Tfmrs          MVA/ Load     Ph Shifters  Deg/  MW      DC Lines          MW
------------- ---- -----     ------------ --- -----     --------------- ------
Wshell #1 7-7  112/  77%     Stinson       27/   25     CU (1,2)         1104
Wshell #2 7-7  112/  77%     Boundary Dam  13/  166     SQ BU (3,4)       500
Drayton#1 4-7   41/  29%     Whiteshell   101/  200     MH Bipole 1      1520
Drayton#2 4-7   52/  28%     Int Falls    118/  150     MH Bipole 2      1721
Dorsey #1 2-4  854/  71%     St. Lawrence  15/    0     MH (BP1+BP2)     3241
Dorsey #2 2-4  965/  80%     Arrowhead      0/  667     Miles City E>W   -150
Forbes    2-4   92/  13%                                 RCDC (15)           0
Stone Lk  3-5  248/  73%                                 Stegall (10)        0

Dorsey SC's       I/S  MVAR  Qmax/ Qmin    SVC's              MVAR  Qmax/ Qmin
----------------- --- -----  ---- -----    ---------------- -----  ---- -----
MIL 7-9G     17.0  2    518   600/ -330    Forbes        500    -3   400/ -450
SCE 1-3G     18.2  3    423   480/ -240    Fargo        13.2    10    20/ -135
SCA 4-6G     18.2  3    423   480/ -240    Watertown    20.0    36   125/  -86
                         -----  ---- -----
       Total           1364  1560/ -810    Series Caps       Num In Serv
       Margin           196                 ---------------- -----------
                                            Roseau        500   2 of 2
                                            Chisago       500   1 of 1
```

Caps/Reactors	MVAR	Caps/Reactors	MVAR	Caps/Reactors	MVAR
Balta (FS) 230	0	Arrowhead 230	160	Chisago T 9 34.5	60
Drayton 115	20	Blackberry 230	47	Chisago T 10 34.5	60
Drayton 13.8	0	Minntac 115	45	Forbes 230	70
Eau Claire(FS) 161	267	Riverton 230	47	Forbes 500	600
Kohlman Lake 115	240	Roseau Co.(FS) 230	0		0
Parkers Lk(FS) 115	0	Running (FS) 230	30	Fargo 115	81
Prairie (FS) 115	40	Running react 230	0	Watertown 20	20
Ramsey (FS) 230	0	Shannon 230	72	Watertown 230	76
Red Rock 115	240		0		0
Rugby 13.8	0	Glenboro 230	0	Arrowhead 345	150
Split Rock(FS) 115	80	Laverendrye 110	98	Stone Lake 345	0
Sheyenne (FS) 115	80	Richer react 230	0	Stone Lk Reac 345	0
Wilton/Bemidji 115	20	St Vital 110	98	Stone Lake 161	40
	0		0	Grdnr Pk Reac 345	0
	0		0	Grdnr Pk Caps 115	0
	0		0	Arpin Caps 138	52
	0		0	Council Creek 138	16

Bus Voltages	V,pu	Bus Voltages	V,pu	Bus Voltages	V,kV
Adams 345	1.004	Arrowhead 230	1.000	Whiteshell 110	119.0
Alexandria 115	1.019	Badoura 115	1.013	Kenora 220	253.5
Audubon 115	1.015	Blackberry 230	1.022	Dryden 220	261.3
Bemidji 115	1.000	Boise Cascade 13.8	1.051	Fort Frances 220	257.6
Byron 345	1.014	Boise Cascade 115	1.019	Mackenzie 220	272.4
Chisago Co. 345	1.010	ETCO 115	0.997	Lakehead 220	273.4
Chisago Co. 500	1.004	Forbes 230	1.006	Marathon 220	269.0
Drayton 230	1.016	Forbes 500	0.995	Wawa 220	262.3
Eau Claire 345	1.004	Hubbard 115	1.001	Mississagi 220	252.3
WEST FARIBAULT 115	0.993	Intl Falls 115	1.020	Fort Frances 118	119.6
LaPorte 115	0.999	Minntac 115	1.005	Lakehead 118	122.8
Maple River 230	1.010	Moranville 230	1.012	Birch 118	120.3
Marshall Tap 115	1.028	Riverton 230	1.013	Marathon 118	127.5
Owatonna 161	0.980	Running 230	1.013		0.000
Prairie 115	1.015	Shannon 230	1.022	Arrowhead 345	1.026
Prairie 230	1.011	Stinson MN 115	1.016	Stone Lake 345	1.023
Ramsey 230	1.003	Jamestown 345	0.956	Stone Lake 161	1.036
Roseau County 230	1.012	Groton 345	1.007	Gardner Park 345	1.035
Roseau County 500	1.026	Watertown 230	1.030	Weston 115	1.035
Sheyenne 230	1.014	Watertown 345	1.020	Arpin 345	1.008
Thief R Falls 115	1.035		0.000	Eau Claire 161	1.031
Tioga 230	1.023	Dorsey 230	1.045	Council Creek 161	0.977
Wahpeton 230	0.997	Dorsey 500	1.000	Hydro Lane 161	1.011
Winger 115	1.026		0.000	Wien 115	1.033
	0.000		0.000		0.000
	0.000		0.000		0.000
	0.000		0.000		0.000

Steady State Relay Margins (measured from inner blinder)

Relay Location	Manuf/Type	PSS Model	South	North	Em North
1) B10T-Tioga (South)	GE OST	SLLP	329%	N/A	N/A
2) -Tioga (North)	GE OST	SLLP	679%	N/A	N/A
3) -Tioga (Em North)	GE OST	SLLP		N/A	N/A
4) D602F-Dorsey	ATP ???	SLINOS	328%	N/A	N/A
5) -Forbes (Normal)	ATP ???	SLINOS	210%	N/A	N/A
6) -Forbes (Em Nrth)	APT S-PRO	SLINOS		N/A	N/A
8) F3M-Intl Falls	APT S-PRO	SLINOS	323%	N/A	N/A
9) G82R-Rugby	APT	SLINOS	N/A	1499%	
10) L20D-Drayton (Normal)	APT, ASEA	SLINOS	802%	N/A	N/A
11) -Drayton (Em Nrth)	ASEA RXZF2	SLINOS		N/A	N/A
12) R50M-Moranville (Norm)	APT, West	SLINOS	796%	N/A	N/A
13) -Moranville (Em N)	ASEA RXZF2	SLINOS		N/A	N/A

Appendix D.2: Summary for Case b04-so11aa.sav (With GI-0616 & GI-0707A)

```
INITIATED AT LOAD FLOW ENTRY POINT ON WED, OCT 29 2008  13:50

B04-SO11AA.SAV;SUMMER;OP LD;SYSTEM INTACT           :
ND=2079,MH=2174,MW=1525,OHMH=-196,OHMP=150,EWTW=189,BD=166


                    P O W E R   F L O W   S U M M A R Y
-----------------------------------------------------------------------------
               NDEX:      2079 MW         ECL-ARP:  555 MW
               MHEX:      2174 MW         PRI-BYN:  692 MW
               MWEX:      1525 MW         AHD-SLK:  661 MW
               KING-ECL:   863 MW         SLK-GPK:  406 MW
               COOPER S:  1141 MW         WNE-WKS:  565 MW
               FTCAL S:    695 MW         GGS:     1759 MW
               GRIS-LNC:   814 MW         QC WEST:   12 MW

           LOAD LEVELS AS PERCENT OF 2011 SUMMER PEAK:
           NORTH DAKOTA (ZONE 90,990) 2640.4 MW,  78.6% OF  3360.2 MW
           NSP             (AREA 600) 9094.3 MW,  81.6% OF  11140.0 MW
           MAN HYDRO       (AREA 667) 2348.2 MW,  77.2% OF  3043.0 MW

Load/Losses   MW  / MW       Generation        MW       Export            MW
----------- ------ -----     --------------- ------     --------------- ------
Manitoba      2348/ 285      MH total gross    5002     ATC West Import   1140
Ont. total   22150/ 478         Wpg River       568     ATC SW Import      460
     NW        915/  37         7 Sisters       170     ATC SE Import    -1182
Sask.         2150/  82      OH total gross   21884     East Bias          331
MP            2021/ 161         northwest       717     SPC>WAPA (B10T)    166
NSP           9094/ 539      SPC total gross   2406     MH>SPC  (3-230)     62
N. Dakota     2640/ 321      MP total gross    2261     MH>SPC  (FALLS)      0
Manitoba       481 MVARS     ND Cfd AC gross   3282     OH>MH  @Kenora    -196
Ont. total   13082 MVARS              net      3111     OH>MP  @Ft Fran    150
     NW        489 MVARS     NSP East gross    2709     OH E>W @Wawa       189
Sask.          502 MVARS              net      2563     OH>East USA          0
MP             540 MVARS         West gross    3033     F601C  @Forbes    1545
NSP           1914 MVARS              net      2871     D602F  @Dorsey    1798
N. Dakota      596 MVARS         Total net     7247     L20D   @Letell     252
ATC           9860/ 298      WAPA SD Hydro     1497     R50M   @Richer     158
ATC           2954 MVARS     Pleasant Valley      0     G82R   @Glenboro   -34
                             LGS/Trimont         19
                             SW MN Wind        1198
                             N DAK WIND         346
                             Swing Bus          210


Tfmrs          MVA/ Load     Ph Shifters  Deg/  MW      DC Lines          MW
------------- ---- -----     ------------ --- -----     --------------- ------
Wshell #1 7-7  112/  78%     Stinson       27/   30     CU (1,2)          1104
Wshell #2 7-7  112/  78%     Boundary Dam  16/  166     SQ BU (3,4)        499
Drayton#1 4-7   41/  29%     Whiteshell   101/  200     MH Bipole 1       1522
Drayton#2 4-7   53/  28%     Int Falls    118/  149     MH Bipole 2       1723
Dorsey #1 2-4  859/  71%     St. Lawrence  15/    0     MH (BP1+BP2)      3246
Dorsey #2 2-4  970/  80%     Arrowhead      0/  661     Miles City E>W    -149
Forbes    2-4   92/  13%                                 RCDC (15)            0
Stone Lk  3-5  241/  71%                                 Stegall (10)         0

Dorsey SC's       I/S  MVAR  Qmax/ Qmin    SVC's              MVAR  Qmax/ Qmin
----------------- --- -----  ---- -----    ----------------- -----  ---- -----
MIL 7-9G     17.0  2    525   600/ -330    Forbes        500     4   400/ -450
SCE 1-3G     18.2  3    428   480/ -240    Fargo        13.2     0    20/ -135
SCA 4-6G     18.2  3    428   480/ -240    Watertown    20.0   110   125/  -86
                        -----  ---- -----
       Total           1382  1560/ -810    Series Caps       Num In Serv
       Margin           178                ----------------- -----------
                                           Roseau        500   2 of 2
```

Caps/Reactors	MVAR	Caps/Reactors	MVAR	Caps/Reactors	MVAR
Balta (FS) 230	0	Arrowhead 230	160	Chisago T 9 34.5	60
Drayton 115	20	Blackberry 230	47	Chisago T 10 34.5	60
Drayton 13.8	0	Minntac 115	45	Forbes 230	70
Eau Claire(FS) 161	267	Riverton 230	47	Forbes 500	600
Kohlman Lake 115	240	Roseau Co.(FS) 230	0		0
Parkers Lk(FS) 115	0	Running (FS) 230	30	Fargo 115	81
Prairie (FS) 115	40	Running react 230	0	Watertown 20	20
Ramsey (FS) 230	30	Shannon 230	72	Watertown 230	76
Red Rock 115	240		0		0
Rugby 13.8	0	Glenboro 230	0	Arrowhead 345	75
Split Rock(FS) 115	80	Laverendrye 110	98	Stone Lake 345	75
Sheyenne (FS) 115	120	Richer react 230	0	Stone Lk Reac 345	0
Wilton/Bemidji 115	20	St Vital 110	98	Stone Lake 161	20
	0		0	Grdnr Pk Reac 345	0
	0		0	Grdnr Pk Caps 115	0
	0		0	Arpin Caps 138	52
	0		0	Council Creek 138	16

Bus Voltages	V,pu	Bus Voltages	V,pu	Bus Voltages	V,kV
Adams 345	1.004	Arrowhead 230	0.992	Whiteshell 110	119.0
Alexandria 115	1.021	Badoura 115	1.013	Kenora 220	253.5
Audubon 115	1.015	Blackberry 230	1.020	Dryden 220	261.3
Bemidji 115	0.999	Boise Cascade 13.8	1.050	Fort Frances 220	257.5
Byron 345	1.014	Boise Cascade 115	1.019	Mackenzie 220	272.3
Chisago Co. 345	1.009	ETCO 115	0.994	Lakehead 220	273.4
Chisago Co. 500	1.003	Forbes 230	1.004	Marathon 220	269.1
Drayton 230	1.016	Forbes 500	0.993	Wawa 220	262.3
Eau Claire 345	1.003	Hubbard 115	1.001	Mississagi 220	252.3
WEST FARIBAULT 115	0.994	Intl Falls 115	1.019	Fort Frances 118	119.6
LaPorte 115	0.998	Minntac 115	1.003	Lakehead 118	122.8
Maple River 230	1.010	Moranville 230	1.010	Birch 118	120.3
Marshall Tap 115	1.028	Riverton 230	1.013	Marathon 118	127.5
Owatonna 161	0.981	Running 230	1.012		0.000
Prairie 115	1.016	Shannon 230	1.020	Arrowhead 345	1.009
Prairie 230	1.012	Stinson MN 115	1.009	Stone Lake 345	1.027
Ramsey 230	1.015	Jamestown 345	0.950	Stone Lake 161	1.032
Roseau County 230	1.010	Groton 345	0.977	Gardner Park 345	1.035
Roseau County 500	1.025	Watertown 230	1.030	Weston 115	1.035
Sheyenne 230	1.017	Watertown 345	1.012	Arpin 345	1.008
Thief R Falls 115	1.034		0.000	Eau Claire 161	1.030
Tioga 230	1.021	Dorsey 230	1.045	Council Creek 161	0.976
Wahpeton 230	0.994	Dorsey 500	1.000	Hydro Lane 161	1.010
Winger 115	1.026		0.000	Wien 115	1.032
	0.000		0.000		0.000
	0.000		0.000		0.000
	0.000		0.000		0.000

Steady State Relay Margins (measured from inner blinder)

Relay Location	Manuf/Type	PSS Model	South	North	Em North
1) B10T-Tioga (South)	GE OST	SLLP	326%	N/A	N/A
2) -Tioga (North)	GE OST	SLLP	673%	N/A	N/A
3) -Tioga (Em North)	GE OST	SLLP		N/A	N/A
4) D602F-Dorsey	ATP ???	SLINOS	323%	N/A	N/A
5) -Forbes (Normal)	ATP ???	SLINOS	207%	N/A	N/A
6) -Forbes (Em Nrth)	APT S-PRO	SLINOS		N/A	N/A
8) F3M-Intl Falls	APT S-PRO	SLINOS	324%	N/A	N/A
9) G82R-Rugby	APT	SLINOS	N/A	1384%	
10) L20D-Drayton (Normal)	APT, ASEA	SLINOS	792%	N/A	N/A
11) -Drayton (Em Nrth)	ASEA RXZF2	SLINOS		N/A	N/A
12) R50M-Moranville (Norm)	APT, West	SLINOS	784%	N/A	N/A
13) -Moranville (Em N)	ASEA RXZF2	SLINOS		N/A	N/A

Appendix D.3: Summary for Sensitivity Case b12-so11aa.sav (Without GI-0616 & GI-0707A and Without GI-0619)

```
INITIATED AT LOAD FLOW ENTRY POINT ON WED, OCT 29 2008  13:51

B12-SO11AA.SAV;SUMMER;OP LD;SYSTEM INTACT           :
ND=2079,MH=2173,MW=1525,OHMH=-196,OHMP=150,EWTW=189,BD=166


                    P O W E R   F L O W   S U M M A R Y
-------------------------------------------------------------------------------
               NDEX:      2079 MW         ECL-ARP:  550 MW
               MHEX:      2173 MW         PRI-BYN:  694 MW
               MWEX:      1525 MW         AHD-SLK:  664 MW
               KING-ECL:   860 MW         SLK-GPK:  406 MW
               COOPER S:  1134 MW         WNE-WKS:  563 MW
               FTCAL S:    686 MW         GGS:     1759 MW
               GRIS-LNC:   809 MW         QC WEST:   21 MW

           LOAD LEVELS AS PERCENT OF 2011 SUMMER PEAK:
           NORTH DAKOTA (ZONE 90,990) 2285.4 MW,  68.0% OF  3360.2 MW
           NSP             (AREA 600) 9144.2 MW,  82.1% OF  11140.0 MW
           MAN HYDRO       (AREA 667) 2348.2 MW,  77.2% OF  3043.0 MW

Load/Losses   MW  / MW       Generation        MW       Export            MW
----------- ------ -----     --------------- ------     --------------- ------
Manitoba      2348/ 284      MH total gross    4999     ATC West Import   1133
Ont. total   22150/ 478         Wpg River       568     ATC SW Import      458
     NW        915/  37         7 Sisters       170     ATC SE Import    -1182
Sask.         2150/  82      OH total gross   21884     East Bias          362
MP            2021/ 167         northwest       717     SPC>WAPA (B10T)    166
NSP           9144/ 544      SPC total gross   2406     MH>SPC  (3-230)     61
N. Dakota     2285/ 311      MP total gross    2261     MH>SPC  (FALLS)      0
Manitoba       481 MVARS     ND Cfd AC gross   3282     OH>MH  @Kenora    -196
Ont. total   13082 MVARS              net      3111     OH>MP  @Ft Fran    150
     NW        489 MVARS     NSP East gross    2709     OH E>W @Wawa       189
Sask.          502 MVARS              net      2563     OH>East USA          0
MP             540 MVARS         West gross    3033     F601C  @Forbes    1565
NSP           1924 MVARS              net      2871     D602F  @Dorsey    1807
N. Dakota      520 MVARS         Total net     7247     L20D   @Letell     235
ATC           9853/ 297      WAPA SD Hydro     1497     R50M   @Richer     158
ATC           2952 MVARS     Pleasant Valley      0     G82R   @Glenboro   -27
                             LGS/Trimont         19
                             SW MN Wind        1198
                             N DAK WIND         346
                             Swing Bus          269


Tfmrs          MVA/ Load     Ph Shifters  Deg/  MW      DC Lines          MW
------------- ---- -----     ------------ --- -----     --------------- ------
Wshell #1 7-7  112/  78%     Stinson       27/   29     CU (1,2)         1104
Wshell #2 7-7  112/  78%     Boundary Dam  14/  166     SQ BU (3,4)       500
Drayton#1 4-7   37/  26%     Whiteshell   102/  200     MH Bipole 1      1521
Drayton#2 4-7   47/  25%     Int Falls    119/  149     MH Bipole 2      1722
Dorsey #1 2-4  864/  72%     St. Lawrence  15/    0     MH (BP1+BP2)     3243
Dorsey #2 2-4  975/  81%     Arrowhead      0/  664     Miles City E>W   -150
Forbes    2-4   84/  12%                                 RCDC (15)           0
Stone Lk  3-5  244/  72%                                 Stegall (10)        0

Dorsey SC's       I/S  MVAR  Qmax/ Qmin    SVC's              MVAR  Qmax/ Qmin
----------------- --- -----  ---- -----    ---------------- -----  ---- -----
MIL 7-9G     17.0  2    526   600/ -330    Forbes        500    31   400/ -450
SCE 1-3G     18.2  3    429   480/ -240    Fargo        13.2    -2    20/ -135
SCA 4-6G     18.2  3    429   480/ -240    Watertown    20.0    20   125/  -86
                         -----  ---- -----
       Total           1384  1560/ -810    Series Caps       Num In Serv
       Margin           176                ---------------- -----------
                                           Roseau        500   2 of 2
                                           Chisago       500   1 of 1
```

Caps/Reactors	MVAR	Caps/Reactors	MVAR	Caps/Reactors	MVAR
Balta (FS) 230	0	Arrowhead 230	160	Chisago T 9 34.5	60
Drayton 115	20	Blackberry 230	47	Chisago T 10 34.5	60
Drayton 13.8	0	Minntac 115	45	Forbes 230	70
Eau Claire(FS) 161	267	Riverton 230	47	Forbes 500	600
Kohlman Lake 115	240	Roseau Co.(FS) 230	0		0
Parkers Lk(FS) 115	0	Running (FS) 230	30	Fargo 115	81
Prairie (FS) 115	40	Running react 230	0	Watertown 20	20
Ramsey (FS) 230	0	Shannon 230	72	Watertown 230	76
Red Rock 115	240		0		0
Rugby 13.8	0	Glenboro 230	0	Arrowhead 345	75
Split Rock(FS) 115	80	Laverendrye 110	98	Stone Lake 345	75
Sheyenne (FS) 115	80	Richer react 230	0	Stone Lk Reac 345	0
Wilton/Bemidji 115	20	St Vital 110	98	Stone Lake 161	40
	0		0	Grdnr Pk Reac 345	0
	0		0	Grdnr Pk Caps 115	0
	0		0	Arpin Caps 138	52
	0		0	Council Creek 138	16

Bus Voltages	V,pu	Bus Voltages	V,pu	Bus Voltages	V,kV
Adams 345	1.004	Arrowhead 230	0.988	Whiteshell 110	119.0
Alexandria 115	1.020	Badoura 115	1.009	Kenora 220	253.5
Audubon 115	1.017	Blackberry 230	1.017	Dryden 220	261.3
Bemidji 115	1.002	Boise Cascade 13.8	1.052	Fort Frances 220	257.7
Byron 345	1.014	Boise Cascade 115	1.020	Mackenzie 220	272.4
Chisago Co. 345	1.008	ETCO 115	0.992	Lakehead 220	273.4
Chisago Co. 500	1.002	Forbes 230	1.002	Marathon 220	269.1
Drayton 230	1.018	Forbes 500	0.993	Wawa 220	262.3
Eau Claire 345	1.002	Hubbard 115	0.997	Mississagi 220	252.3
WEST FARIBAULT 115	0.995	Intl Falls 115	1.021	Fort Frances 118	119.7
LaPorte 115	0.998	Minntac 115	1.001	Lakehead 118	122.8
Maple River 230	1.014	Moranville 230	1.009	Birch 118	120.3
Marshall Tap 115	1.028	Riverton 230	1.005	Marathon 118	127.5
Owatonna 161	0.981	Running 230	1.008		0.000
Prairie 115	1.020	Shannon 230	1.018	Arrowhead 345	1.007
Prairie 230	1.015	Stinson MN 115	1.007	Stone Lake 345	1.029
Ramsey 230	1.010	Jamestown 345	0.961	Stone Lake 161	1.039
Roseau County 230	1.009	Groton 345	1.012	Gardner Park 345	1.035
Roseau County 500	1.025	Watertown 230	1.030	Weston 115	1.035
Sheyenne 230	1.018	Watertown 345	1.022	Arpin 345	1.006
Thief R Falls 115	1.011		0.000	Eau Claire 161	1.032
Tioga 230	1.024	Dorsey 230	1.045	Council Creek 161	0.972
Wahpeton 230	1.001	Dorsey 500	0.999	Hydro Lane 161	1.012
Winger 115	1.024		0.000	Wien 115	1.033
	0.000		0.000		0.000
	0.000		0.000		0.000
	0.000		0.000		0.000

Steady State Relay Margins (measured from inner blinder)

Relay Location	Manuf/Type	PSS Model	South	North	Em North
1) B10T-Tioga (South)	GE OST	SLLP	330%	N/A	N/A
2) -Tioga (North)	GE OST	SLLP	680%	N/A	N/A
3) -Tioga (Em North)	GE OST	SLLP		N/A	N/A
4) D602F-Dorsey	ATP ???	SLINOS	318%	N/A	N/A
5) -Forbes (Normal)	ATP ???	SLINOS	204%	N/A	N/A
6) -Forbes (Em Nrth)	APT S-PRO	SLINOS		N/A	N/A
8) F3M-Intl Falls	APT S-PRO	SLINOS	325%	N/A	N/A
9) G82R-Rugby	APT	SLINOS	N/A	1530%	
10) L20D-Drayton (Normal)	APT, ASEA	SLINOS	871%	N/A	N/A
11) -Drayton (Em Nrth)	ASEA RXZF2	SLINOS		N/A	N/A
12) R50M-Moranville (Norm)	APT, West	SLINOS	780%	N/A	N/A
13) -Moranville (Em N)	ASEA RXZF2	SLINOS		N/A	N/A

Appendix D.4: Summary for Sensitivity Case b14-so11aa.sav (With GI-0616 & GI-0707A and Without GI-0619)

```
INITIATED AT LOAD FLOW ENTRY POINT ON WED, OCT 29 2008  13:52

B14-SO11AA.SAV;SUMMER;OP LD;SYSTEM INTACT           :
ND=2079,MH=2174,MW=1525,OHMH=-196,OHMP=150,EWTW=189,BD=166


                    P O W E R   F L O W   S U M M A R Y
-------------------------------------------------------------------------------
               NDEX:      2079 MW         ECL-ARP:  550 MW
               MHEX:      2174 MW         PRI-BYN:  693 MW
               MWEX:      1525 MW         AHD-SLK:  664 MW
               KING-ECL:   860 MW         SLK-GPK:  406 MW
               COOPER S:  1140 MW         WNE-WKS:  566 MW
               FTCAL S:    689 MW         GGS:     1761 MW
               GRIS-LNC:   815 MW         QC WEST:   20 MW

           LOAD LEVELS AS PERCENT OF 2011 SUMMER PEAK:
           NORTH DAKOTA (ZONE 90,990) 2352.0 MW,  70.0% OF  3360.2 MW
           NSP             (AREA 600) 9120.9 MW,  81.9% OF  11140.0 MW
           MAN HYDRO       (AREA 667) 2348.2 MW,  77.2% OF  3043.0 MW

Load/Losses   MW  / MW       Generation        MW       Export            MW
----------- ------ -----     --------------- ------     --------------- ------
Manitoba      2348/ 284      MH total gross    5001     ATC West Import   1135
Ont. total   22150/ 478         Wpg River       568     ATC SW Import      459
     NW        915/  37         7 Sisters       170     ATC SE Import    -1181
Sask.         2150/  82      OH total gross   21884     East Bias          348
MP            2021/ 166         northwest       717     SPC>WAPA (B10T)    166
NSP           9120/ 542      SPC total gross   2406     MH>SPC  (3-230)     62
N. Dakota     2351/ 313      MP total gross    2261     MH>SPC  (FALLS)      0
Manitoba       481 MVARS     ND Cfd AC gross   3282     OH>MH  @Kenora    -196
Ont. total   13082 MVARS              net      3111     OH>MP  @Ft Fran    150
     NW        489 MVARS     NSP East gross    2709     OH E>W @Wawa       189
Sask.          502 MVARS              net      2563     OH>East USA          0
MP             540 MVARS         West gross    3033     F601C  @Forbes    1564
NSP           1919 MVARS              net      2871     D602F  @Dorsey    1814
N. Dakota      534 MVARS         Total net     7247     L20D   @Letell     236
ATC           9856/ 297      WAPA SD Hydro     1497     R50M   @Richer     159
ATC           2953 MVARS     Pleasant Valley      0     G82R   @Glenboro   -36
                             LGS/Trimont         19
                             SW MN Wind        1198
                             N DAK WIND         346
                             Swing Bus          204


Tfmrs          MVA/ Load     Ph Shifters  Deg/  MW      DC Lines          MW
------------- ---- -----     ------------ --- -----     --------------- ------
Wshell #1 7-7  112/  78%     Stinson       27/   29     CU (1,2)         1103
Wshell #2 7-7  112/  78%     Boundary Dam  16/  166     SQ BU (3,4)       499
Drayton#1 4-7   37/  27%     Whiteshell   102/  200     MH Bipole 1      1521
Drayton#2 4-7   48/  25%     Int Falls    119/  149     MH Bipole 2      1723
Dorsey #1 2-4  868/  72%     St. Lawrence  15/    0     MH (BP1+BP2)     3245
Dorsey #2 2-4  980/  81%     Arrowhead      0/  664     Miles City E>W    -150
Forbes    2-4   88/  13%                                 RCDC (15)           0
Stone Lk  3-5  244/  72%                                 Stegall (10)        0

Dorsey SC's       I/S  MVAR  Qmax/ Qmin    SVC's              MVAR  Qmax/ Qmin
----------------- --- -----  ---- -----    ----------------- -----  ---- -----
MIL 7-9G     17.0  2    532   600/ -330    Forbes        500    32   400/ -450
SCE 1-3G     18.2  3    434   480/ -240    Fargo        13.2    14    20/ -135
SCA 4-6G     18.2  3    434   480/ -240    Watertown    20.0    70   125/  -86
                         -----  ---- -----
       Total           1401  1560/ -810    Series Caps       Num In Serv
       Margin           159                ----------------- -----------
                                           Roseau        500   2 of 2
```

Caps/Reactors	MVAR	Caps/Reactors	MVAR	Caps/Reactors	MVAR
Balta (FS) 230	0	Arrowhead 230	160	Chisago T 9 34.5	60
Drayton 115	20	Blackberry 230	47	Chisago T 10 34.5	60
Drayton 13.8	0	Minntac 115	45	Forbes 230	70
Eau Claire(FS) 161	267	Riverton 230	47	Forbes 500	600
Kohlman Lake 115	240	Roseau Co.(FS) 230	0		0
Parkers Lk(FS) 115	0	Running (FS) 230	30	Fargo 115	81
Prairie (FS) 115	40	Running react 230	0	Watertown 20	20
Ramsey (FS) 230	0	Shannon 230	72	Watertown 230	76
Red Rock 115	240		0		0
Rugby 13.8	0	Glenboro 230	0	Arrowhead 345	75
Split Rock(FS) 115	80	Laverendrye 110	98	Stone Lake 345	75
Sheyenne (FS) 115	80	Richer react 230	0	Stone Lk Reac 345	0
Wilton/Bemidji 115	20	St Vital 110	98	Stone Lake 161	40
	0		0	Grdnr Pk Reac 345	0
	0		0	Grdnr Pk Caps 115	0
	0		0	Arpin Caps 138	52
	0		0	Council Creek 138	16

Bus Voltages	V,pu	Bus Voltages	V,pu	Bus Voltages	V,kV
Adams 345	1.004	Arrowhead 230	0.989	Whiteshell 110	119.0
Alexandria 115	1.024	Badoura 115	1.012	Kenora 220	253.5
Audubon 115	1.014	Blackberry 230	1.017	Dryden 220	261.3
Bemidji 115	0.997	Boise Cascade 13.8	1.051	Fort Frances 220	257.6
Byron 345	1.014	Boise Cascade 115	1.020	Mackenzie 220	272.4
Chisago Co. 345	1.008	ETCO 115	0.992	Lakehead 220	273.4
Chisago Co. 500	1.001	Forbes 230	1.002	Marathon 220	269.1
Drayton 230	1.013	Forbes 500	0.992	Wawa 220	262.3
Eau Claire 345	1.002	Hubbard 115	0.999	Mississagi 220	252.3
WEST FARIBAULT 115	0.996	Intl Falls 115	1.020	Fort Frances 118	119.7
LaPorte 115	0.996	Minntac 115	1.001	Lakehead 118	122.8
Maple River 230	1.007	Moranville 230	1.008	Birch 118	120.3
Marshall Tap 115	1.029	Riverton 230	1.011	Marathon 118	127.5
Owatonna 161	0.981	Running 230	1.008		0.000
Prairie 115	1.012	Shannon 230	1.018	Arrowhead 345	1.008
Prairie 230	1.008	Stinson MN 115	1.008	Stone Lake 345	1.029
Ramsey 230	1.002	Jamestown 345	0.952	Stone Lake 161	1.039
Roseau County 230	1.008	Groton 345	0.991	Gardner Park 345	1.035
Roseau County 500	1.025	Watertown 230	1.030	Weston 115	1.035
Sheyenne 230	1.013	Watertown 345	1.017	Arpin 345	1.006
Thief R Falls 115	1.003		0.000	Eau Claire 161	1.032
Tioga 230	1.026	Dorsey 230	1.045	Council Creek 161	0.972
Wahpeton 230	0.997	Dorsey 500	0.999	Hydro Lane 161	1.012
Winger 115	1.018		0.000	Wien 115	1.033
	0.000		0.000		0.000
	0.000		0.000		0.000
	0.000		0.000		0.000

Steady State Relay Margins (measured from inner blinder)

Relay Location	Manuf/Type	PSS Model	South	North	Em North
1) B10T-Tioga (South)	GE OST	SLLP	330%	N/A	N/A
2) -Tioga (North)	GE OST	SLLP	680%	N/A	N/A
3) -Tioga (Em North)	GE OST	SLLP		N/A	N/A
4) D602F-Dorsey	ATP ???	SLINOS	314%	N/A	N/A
5) -Forbes (Normal)	ATP ???	SLINOS	202%	N/A	N/A
6) -Forbes (Em Nrth)	APT S-PRO	SLINOS		N/A	N/A
8) F3M-Intl Falls	APT S-PRO	SLINOS	324%	N/A	N/A
9) G82R-Rugby	APT	SLINOS	N/A	1322%	
10) L20D-Drayton (Normal)	APT, ASEA	SLINOS	853%	N/A	N/A
11) -Drayton (Em Nrth)	ASEA RXZF2	SLINOS		N/A	N/A
12) R50M-Moranville (Norm)	APT, West	SLINOS	769%	N/A	N/A
13) -Moranville (Em N)	ASEA RXZF2	SLINOS		N/A	N/A

Appendix D.5: Summary for Sensitivity Case b16-so11aa.sav (With GI-0616 & GI-0707A, Without GI-0619, and With System Reinforcement)

```
INITIATED AT LOAD FLOW ENTRY POINT ON WED, OCT 29 2008  13:55

B16-SO11AA.SAV;SUMMER;OP LD;SYSTEM INTACT           :
ND=2078,MH=2174,MW=1525,OHMH=-195,OHMP=150,EWTW=190,BD=165


                    P O W E R   F L O W   S U M M A R Y
-----------------------------------------------------------------------------
               NDEX:      2078 MW         ECL-ARP:  550 MW
               MHEX:      2174 MW         PRI-BYN:  691 MW
               MWEX:      1525 MW         AHD-SLK:  665 MW
               KING-ECL:   859 MW         SLK-GPK:  406 MW
               COOPER S:  1141 MW         WNE-WKS:  566 MW
               FTCAL S:    688 MW         GGS:     1761 MW
               GRIS-LNC:   818 MW         QC WEST:   19 MW

           LOAD LEVELS AS PERCENT OF 2011 SUMMER PEAK:
           NORTH DAKOTA (ZONE 90,990) 2355.8 MW,  70.1% OF  3360.2 MW
           NSP             (AREA 600) 9120.0 MW,  81.9% OF  11140.0 MW
           MAN HYDRO       (AREA 667) 2348.2 MW,  77.2% OF  3043.0 MW

Load/Losses   MW  / MW       Generation        MW       Export            MW
----------- ------ -----     --------------- ------     --------------- ------
Manitoba      2348/ 284      MH total gross    5000     ATC West Import   1134
Ont. total   22150/ 478         Wpg River       568     ATC SW Import      459
     NW        915/  37         7 Sisters       170     ATC SE Import    -1181
Sask.         2150/  82      OH total gross   21884     East Bias          345
MP            2021/ 165         northwest       717     SPC>WAPA (B10T)    165
NSP           9120/ 539      SPC total gross   2406     MH>SPC  (3-230)     61
N. Dakota     2355/ 310      MP total gross    2261     MH>SPC  (FALLS)      0
Manitoba       481 MVARS     ND Cfd AC gross   3282     OH>MH  @Kenora    -195
Ont. total   13082 MVARS              net      3111     OH>MP  @Ft Fran    150
     NW        489 MVARS     NSP East gross    2709     OH E>W @Wawa       190
Sask.          502 MVARS              net      2563     OH>East USA          0
MP             540 MVARS         West gross    3033     F601C  @Forbes    1559
NSP           1919 MVARS              net      2871     D602F  @Dorsey    1810
N. Dakota      535 MVARS         Total net     7247     L20D   @Letell     238
ATC           9857/ 297      WAPA SD Hydro     1497     R50M   @Richer     158
ATC           2953 MVARS     Pleasant Valley      0     G82R   @Glenboro   -33
                             LGS/Trimont         19
                             SW MN Wind        1198
                             N DAK WIND         346
                             Swing Bus          205


Tfmrs          MVA/ Load     Ph Shifters  Deg/  MW      DC Lines          MW
------------- ---- -----     ------------ --- -----     --------------- ------
Wshell #1 7-7  112/  77%     Stinson       27/   30     CU (1,2)          1104
Wshell #2 7-7  112/  77%     Boundary Dam  15/  166     SQ BU (3,4)        500
Drayton#1 4-7   38/  27%     Whiteshell   102/  199     MH Bipole 1       1521
Drayton#2 4-7   48/  25%     Int Falls    119/  150     MH Bipole 2       1722
Dorsey #1 2-4  865/  72%     St. Lawrence  15/    0     MH (BP1+BP2)      3243
Dorsey #2 2-4  976/  81%     Arrowhead      0/  665     Miles City E>W    -150
Forbes    2-4   89/  13%                                 RCDC (15)            0
Stone Lk  3-5  244/  72%                                 Stegall (10)         0

Dorsey SC's       I/S  MVAR  Qmax/ Qmin    SVC's              MVAR  Qmax/ Qmin
----------------- --- -----  ---- -----    ----------------- -----  ---- -----
MIL 7-9G     17.0  2    526   600/ -330    Forbes        500    32   400/ -450
SCE 1-3G     18.2  3    429   480/ -240    Fargo        13.2     6    20/ -135
SCA 4-6G     18.2  3    429   480/ -240    Watertown    20.0    47   125/  -86
                        -----  ---- -----
       Total           1385  1560/ -810    Series Caps       Num In Serv
       Margin           175                ----------------- -----------
                                           Roseau        500   2 of 2
```

Caps/Reactors	MVAR	Caps/Reactors	MVAR	Caps/Reactors	MVAR
Balta (FS) 230	0	Arrowhead 230	160	Chisago T 9 34.5	60
Drayton 115	20	Blackberry 230	47	Chisago T 10 34.5	60
Drayton 13.8	0	Minntac 115	45	Forbes 230	70
Eau Claire(FS) 161	267	Riverton 230	47	Forbes 500	600
Kohlman Lake 115	240	Roseau Co.(FS) 230	0		0
Parkers Lk(FS) 115	0	Running (FS) 230	30	Fargo 115	81
Prairie (FS) 115	40	Running react 230	0	Watertown 20	20
Ramsey (FS) 230	0	Shannon 230	72	Watertown 230	76
Red Rock 115	240		0		0
Rugby 13.8	0	Glenboro 230	0	Arrowhead 345	75
Split Rock(FS) 115	80	Laverendrye 110	98	Stone Lake 345	75
Sheyenne (FS) 115	80	Richer react 230	0	Stone Lk Reac 345	0
Wilton/Bemidji 115	20	St Vital 110	98	Stone Lake 161	40
	0		0	Grdnr Pk Reac 345	0
	0		0	Grdnr Pk Caps 115	0
	0		0	Arpin Caps 138	52
	0		0	Council Creek 138	16

Bus Voltages	V,pu	Bus Voltages	V,pu	Bus Voltages	V,kV
Adams 345	1.004	Arrowhead 230	0.994	Whiteshell 110	119.0
Alexandria 115	1.026	Badoura 115	1.015	Kenora 220	253.4
Audubon 115	1.017	Blackberry 230	1.019	Dryden 220	261.2
Bemidji 115	1.000	Boise Cascade 13.8	1.050	Fort Frances 220	257.4
Byron 345	1.014	Boise Cascade 115	1.018	Mackenzie 220	272.3
Chisago Co. 345	1.009	ETCO 115	0.994	Lakehead 220	273.4
Chisago Co. 500	1.003	Forbes 230	1.004	Marathon 220	269.0
Drayton 230	1.015	Forbes 500	0.995	Wawa 220	262.2
Eau Claire 345	1.002	Hubbard 115	1.002	Mississagi 220	252.3
WEST FARIBAULT 115	0.996	Intl Falls 115	1.019	Fort Frances 118	119.5
LaPorte 115	0.999	Minntac 115	1.003	Lakehead 118	122.8
Maple River 230	1.010	Moranville 230	1.010	Birch 118	120.3
Marshall Tap 115	1.029	Riverton 230	1.013	Marathon 118	127.5
Owatonna 161	0.981	Running 230	1.011		0.000
Prairie 115	1.015	Shannon 230	1.019	Arrowhead 345	1.012
Prairie 230	1.010	Stinson MN 115	1.012	Stone Lake 345	1.032
Ramsey 230	1.004	Jamestown 345	0.954	Stone Lake 161	1.042
Roseau County 230	1.010	Groton 345	1.003	Gardner Park 345	1.035
Roseau County 500	1.025	Watertown 230	1.030	Weston 115	1.035
Sheyenne 230	1.015	Watertown 345	1.019	Arpin 345	1.007
Thief R Falls 115	1.006		0.000	Eau Claire 161	1.032
Tioga 230	1.026	Dorsey 230	1.045	Council Creek 161	0.972
Wahpeton 230	1.000	Dorsey 500	0.999	Hydro Lane 161	1.013
Winger 115	1.020		0.000	Wien 115	1.033
	0.000		0.000		0.000
	0.000		0.000		0.000
	0.000		0.000		0.000

Steady State Relay Margins (measured from inner blinder)

Relay Location	Manuf/Type	PSS Model	South	North	Em North
1) B10T-Tioga (South)	GE OST	SLLP	333%	N/A	N/A
2) -Tioga (North)	GE OST	SLLP	686%	N/A	N/A
3) -Tioga (Em North)	GE OST	SLLP		N/A	N/A
4) D602F-Dorsey	ATP ???	SLINOS	318%	N/A	N/A
5) -Forbes (Normal)	ATP ???	SLINOS	204%	N/A	N/A
6) -Forbes (Em Nrth)	APT S-PRO	SLINOS		N/A	N/A
8) F3M-Intl Falls	APT S-PRO	SLINOS	323%	N/A	N/A
9) G82R-Rugby	APT	SLINOS	N/A	1393%	
10) L20D-Drayton (Normal)	APT, ASEA	SLINOS	847%	N/A	N/A
11) -Drayton (Em Nrth)	ASEA RXZF2	SLINOS		N/A	N/A
12) R50M-Moranville (Norm)	APT, West	SLINOS	777%	N/A	N/A
13) -Moranville (Em N)	ASEA RXZF2	SLINOS		N/A	N/A

Appendix D.6: Summary for Sensitivity Case b65-so11aa.sav (With GI-0616 & GI-0707A, Without GI-0619, and With System Reinforcement)

```
INITIATED AT LOAD FLOW ENTRY POINT ON WED, DEC 24 2008  11:31

B65-SO11AA.SAV;SUMMER;OP LD;SYSTEM INTACT           :
ND=2078,MH=2174,MW=1524,OHMH=-195,OHMP=150,EWTW=190,BD=165


                    P O W E R   F L O W   S U M M A R Y
-----------------------------------------------------------------------------
               NDEX:      2078 MW         ECL-ARP:  550 MW
               MHEX:      2174 MW         PRI-BYN:  690 MW
               MWEX:      1524 MW         AHD-SLK:  664 MW
               KING-ECL:   859 MW         SLK-GPK:  406 MW
               COOPER S:  1140 MW         WNE-WKS:  566 MW
               FTCAL S:    688 MW         GGS:     1761 MW
               GRIS-LNC:   819 MW         QC WEST:   18 MW

           LOAD LEVELS AS PERCENT OF 2011 SUMMER PEAK:
           NORTH DAKOTA (ZONE 90,990) 2272.4 MW,  67.6% OF  3360.2 MW
           NSP             (AREA 600) 9121.4 MW,  81.9% OF  11140.0 MW
           MAN HYDRO       (AREA 667) 2348.2 MW,  77.2% OF  3043.0 MW

Load/Losses   MW  / MW       Generation        MW       Export            MW
----------- ------ -----     --------------- ------     --------------- ------
Manitoba      2348/ 284      MH total gross    4999     ATC West Import   1134
Ont. total   22150/ 478         Wpg River       568     ATC SW Import      459
     NW        915/  37         7 Sisters       170     ATC SE Import    -1181
Sask.         2150/  82      OH total gross   21884     East Bias          345
MP            2021/ 165         northwest       717     SPC>WAPA (B10T)    165
NSP           9121/ 539      SPC total gross   2406     MH>SPC  (3-230)     60
N. Dakota     2272/ 301      MP total gross    2261     MH>SPC  (FALLS)      0
Manitoba       481 MVARS     ND Cfd AC gross   3257     OH>MH  @Kenora    -195
Ont. total   13082 MVARS              net      3086     OH>MP  @Ft Fran    150
     NW        489 MVARS     NSP East gross    2709     OH E>W @Wawa       190
Sask.          502 MVARS              net      2563     OH>East USA          0
MP             540 MVARS         West gross    3033     F601C  @Forbes    1559
NSP           1919 MVARS              net      2871     D602F  @Dorsey    1807
N. Dakota      517 MVARS         Total net     7247     L20D   @Letell     236
ATC           9856/ 297      WAPA SD Hydro     1497     R50M   @Richer     158
ATC           2953 MVARS     Pleasant Valley      0     G82R   @Glenboro   -27
                             LGS/Trimont         19
                             SW MN Wind        1198
                             N DAK WIND         346
                             Swing Bus          288


Tfmrs          MVA/ Load     Ph Shifters  Deg/  MW      DC Lines          MW
------------- ---- -----     ------------ --- -----     --------------- ------
Wshell #1 7-7  112/  77%     Stinson       27/   30     CU (1,2)          1104
Wshell #2 7-7  112/  77%     Boundary Dam  15/  165     SQ BU (3,4)        500
Drayton#1 4-7   37/  26%     Whiteshell   102/  199     MH Bipole 1       1521
Drayton#2 4-7   47/  25%     Int Falls    119/  150     MH Bipole 2       1722
Dorsey #1 2-4  863/  71%     St. Lawrence  15/    0     MH (BP1+BP2)      3243
Dorsey #2 2-4  975/  81%     Arrowhead      0/  664     Miles City E>W    -149
Forbes    2-4   87/  13%                                 RCDC (15)            0
Stone Lk  3-5  244/  72%                                 Stegall (10)         0

Dorsey SC's       I/S  MVAR  Qmax/ Qmin    SVC's              MVAR  Qmax/ Qmin
----------------- --- -----  ---- -----    ----------------- -----  ---- -----
MIL 7-9G     17.0  2    524   600/ -330    Forbes        500    31   400/ -450
SCE 1-3G     18.2  3    427   480/ -240    Fargo        13.2     4    20/ -135
SCA 4-6G     18.2  3    427   480/ -240    Watertown    20.0    43   125/  -86
                        -----  ---- -----
       Total           1379  1560/ -810    Series Caps       Num In Serv
       Margin           181                ----------------- -----------
                                           Roseau        500   2 of 2
```

Caps/Reactors	MVAR	Caps/Reactors	MVAR	Caps/Reactors	MVAR
Balta (FS) 230	0	Arrowhead 230	160	Chisago T 9 34.5	60
Drayton 115	20	Blackberry 230	47	Chisago T 10 34.5	60
Drayton 13.8	0	Minntac 115	45	Forbes 230	70
Eau Claire(FS) 161	267	Riverton 230	47	Forbes 500	600
Kohlman Lake 115	240	Roseau Co.(FS) 230	0		0
Parkers Lk(FS) 115	0	Running (FS) 230	30	Fargo 115	81
Prairie (FS) 115	40	Running react 230	0	Watertown 20	20
Ramsey (FS) 230	0	Shannon 230	72	Watertown 230	76
Red Rock 115	240		0		0
Rugby 13.8	0	Glenboro 230	0	Arrowhead 345	75
Split Rock(FS) 115	80	Laverendrye 110	98	Stone Lake 345	75
Sheyenne (FS) 115	80	Richer react 230	0	Stone Lk Reac 345	0
Wilton/Bemidji 115	20	St Vital 110	98	Stone Lake 161	40
	0		0	Grdnr Pk Reac 345	0
	0		0	Grdnr Pk Caps 115	0
	0		0	Arpin Caps 138	52
	0		0	Council Creek 138	16

Bus Voltages	V,pu	Bus Voltages	V,pu	Bus Voltages	V,kV
Adams 345	1.004	Arrowhead 230	0.993	Whiteshell 110	119.0
Alexandria 115	1.025	Badoura 115	1.010	Kenora 220	253.4
Audubon 115	1.017	Blackberry 230	1.018	Dryden 220	261.2
Bemidji 115	1.001	Boise Cascade 13.8	1.050	Fort Frances 220	257.4
Byron 345	1.014	Boise Cascade 115	1.018	Mackenzie 220	272.3
Chisago Co. 345	1.009	ETCO 115	0.994	Lakehead 220	273.4
Chisago Co. 500	1.003	Forbes 230	1.004	Marathon 220	269.0
Drayton 230	1.016	Forbes 500	0.995	Wawa 220	262.2
Eau Claire 345	1.002	Hubbard 115	0.998	Mississagi 220	252.3
WEST FARIBAULT 115	0.996	Intl Falls 115	1.019	Fort Frances 118	119.5
LaPorte 115	0.998	Minntac 115	1.003	Lakehead 118	122.8
Maple River 230	1.011	Moranville 230	1.010	Birch 118	120.3
Marshall Tap 115	1.029	Riverton 230	1.008	Marathon 118	127.5
Owatonna 161	0.981	Running 230	1.011		0.000
Prairie 115	1.016	Shannon 230	1.019	Arrowhead 345	1.012
Prairie 230	1.012	Stinson MN 115	1.011	Stone Lake 345	1.032
Ramsey 230	1.006	Jamestown 345	0.959	Stone Lake 161	1.041
Roseau County 230	1.010	Groton 345	1.004	Gardner Park 345	1.035
Roseau County 500	1.025	Watertown 230	1.030	Weston 115	1.035
Sheyenne 230	1.016	Watertown 345	1.019	Arpin 345	1.007
Thief R Falls 115	1.008		0.000	Eau Claire 161	1.032
Tioga 230	1.024	Dorsey 230	1.045	Council Creek 161	0.972
Wahpeton 230	1.000	Dorsey 500	0.999	Hydro Lane 161	1.012
Winger 115	1.022		0.000	Wien 115	1.033
	0.000		0.000		0.000
	0.000		0.000		0.000
	0.000		0.000		0.000

Steady State Relay Margins (measured from inner blinder)

Relay Location	Manuf/Type	PSS Model	South	North	Em North
1) B10T-Tioga (South)	GE OST	SLLP	333%	N/A	N/A
2) -Tioga (North)	GE OST	SLLP	685%	N/A	N/A
3) -Tioga (Em North)	GE OST	SLLP		N/A	N/A
4) D602F-Dorsey	ATP ???	SLINOS	319%	N/A	N/A
5) -Forbes (Normal)	ATP ???	SLINOS	205%	N/A	N/A
6) -Forbes (Em Nrth)	APT S-PRO	SLINOS		N/A	N/A
8) F3M-Intl Falls	APT S-PRO	SLINOS	323%	N/A	N/A
9) G82R-Rugby	APT	SLINOS	N/A	1508%	
10) L20D-Drayton (Normal)	APT, ASEA	SLINOS	858%	N/A	N/A
11) -Drayton (Em Nrth)	ASEA RXZF2	SLINOS		N/A	N/A
12) R50M-Moranville (Norm)	APT, West	SLINOS	781%	N/A	N/A
13) -Moranville (Em N)	ASEA RXZF2	SLINOS		N/A	N/A

Appendix D.7: Summary for Sensitivity Case b32-so11aa.sav (Without GI-0619 and With System Reinforcement)

```
INITIATED AT LOAD FLOW ENTRY POINT ON MON, DEC 08 2008  11:10

B32-SO11AA.SAV;SUMMER;OP LD;SYSTEM INTACT           :
ND=2080,MH=2172,MW=1525,OHMH=-196,OHMP=150,EWTW=189,BD=166


                    P O W E R   F L O W   S U M M A R Y
-------------------------------------------------------------------------------
               NDEX:      2080 MW         ECL-ARP:  549 MW
               MHEX:      2172 MW         PRI-BYN:  694 MW
               MWEX:      1525 MW         AHD-SLK:  664 MW
               KING-ECL:   860 MW         SLK-GPK:  406 MW
               COOPER S:  1134 MW         WNE-WKS:  563 MW
               FTCAL S:    686 MW         GGS:     1758 MW
               GRIS-LNC:   808 MW         QC WEST:   22 MW

           LOAD LEVELS AS PERCENT OF 2011 SUMMER PEAK:
           NORTH DAKOTA (ZONE 90,990) 2287.3 MW,  68.1% OF  3360.2 MW
           NSP             (AREA 600) 9147.1 MW,  82.1% OF  11140.0 MW
           MAN HYDRO       (AREA 667) 2348.2 MW,  77.2% OF  3043.0 MW

Load/Losses   MW  / MW       Generation        MW       Export            MW
----------- ------ -----     --------------- ------     --------------- ------
Manitoba      2348/ 284      MH total gross    4998     ATC West Import   1133
Ont. total   22150/ 478         Wpg River       568     ATC SW Import      458
     NW        915/  37         7 Sisters       170     ATC SE Import    -1182
Sask.         2150/  82      OH total gross   21884     East Bias          366
MP            2021/ 168         northwest       717     SPC>WAPA (B10T)    166
NSP           9147/ 544      SPC total gross   2406     MH>SPC  (3-230)     61
N. Dakota     2287/ 309      MP total gross    2261     MH>SPC  (FALLS)      0
Manitoba       481 MVARS     ND Cfd AC gross   3282     OH>MH  @Kenora    -196
Ont. total   13082 MVARS              net      3111     OH>MP  @Ft Fran    150
     NW        489 MVARS     NSP East gross    2709     OH E>W @Wawa       189
Sask.          502 MVARS              net      2563     OH>East USA          0
MP             540 MVARS         West gross    3033     F601C  @Forbes    1565
NSP           1925 MVARS              net      2871     D602F  @Dorsey    1804
N. Dakota      520 MVARS         Total net     7247     L20D   @Letell     235
ATC           9853/ 297      WAPA SD Hydro     1497     R50M   @Richer     157
ATC           2952 MVARS     Pleasant Valley      0     G82R   @Glenboro   -25
                             LGS/Trimont         19
                             SW MN Wind        1198
                             N DAK WIND         346
                             Swing Bus          267


Tfmrs          MVA/ Load     Ph Shifters  Deg/  MW      DC Lines          MW
------------- ---- -----     ------------ --- -----     --------------- ------
Wshell #1 7-7  112/  77%     Stinson       27/   29     CU (1,2)         1104
Wshell #2 7-7  112/  77%     Boundary Dam  13/  166     SQ BU (3,4)       499
Drayton#1 4-7   37/  26%     Whiteshell   102/  200     MH Bipole 1      1520
Drayton#2 4-7   48/  25%     Int Falls    119/  149     MH Bipole 2      1721
Dorsey #1 2-4  862/  71%     St. Lawrence  15/    0     MH (BP1+BP2)     3242
Dorsey #2 2-4  973/  81%     Arrowhead      0/  664     Miles City E>W    -150
Forbes    2-4   83/  12%                                 RCDC (15)           0
Stone Lk  3-5  244/  72%                                 Stegall (10)        0

Dorsey SC's       I/S  MVAR  Qmax/ Qmin    SVC's              MVAR  Qmax/ Qmin
----------------- --- -----  ---- -----    ----------------- -----  ---- -----
MIL 7-9G     17.0  2    523   600/ -330    Forbes        500    30   400/ -450
SCE 1-3G     18.2  3    427   480/ -240    Fargo        13.2    -8    20/ -135
SCA 4-6G     18.2  3    427   480/ -240    Watertown    20.0    16   125/  -86
                        -----  ---- -----
       Total           1377  1560/ -810    Series Caps       Num In Serv
       Margin           183                 ----------------- -----------
                                            Roseau        500   2 of 2
                                            Chisago       500   1 of 1
```

Caps/Reactors	MVAR	Caps/Reactors	MVAR	Caps/Reactors	MVAR
Balta (FS) 230	0	Arrowhead 230	160	Chisago T 9 34.5	60
Drayton 115	20	Blackberry 230	47	Chisago T 10 34.5	60
Drayton 13.8	0	Minntac 115	45	Forbes 230	70
Eau Claire(FS) 161	267	Riverton 230	47	Forbes 500	600
Kohlman Lake 115	240	Roseau Co.(FS) 230	0		0
Parkers Lk(FS) 115	0	Running (FS) 230	30	Fargo 115	54
Prairie (FS) 115	40	Running react 230	0	Watertown 20	20
Ramsey (FS) 230	0	Shannon 230	72	Watertown 230	76
Red Rock 115	240		0		0
Rugby 13.8	-25	Glenboro 230	0	Arrowhead 345	75
Split Rock(FS) 115	80	Laverendrye 110	98	Stone Lake 345	75
Sheyenne (FS) 115	80	Richer react 230	0	Stone Lk Reac 345	0
Wilton/Bemidji 115	20	St Vital 110	98	Stone Lake 161	40
	0		0	Grdnr Pk Reac 345	0
	0		0	Grdnr Pk Caps 115	0
	0		0	Arpin Caps 138	52
	0		0	Council Creek 138	16

Bus Voltages	V,pu	Bus Voltages	V,pu	Bus Voltages	V,kV
Adams 345	1.004	Arrowhead 230	0.988	Whiteshell 110	119.0
Alexandria 115	1.023	Badoura 115	1.014	Kenora 220	253.4
Audubon 115	1.023	Blackberry 230	1.017	Dryden 220	261.2
Bemidji 115	1.010	Boise Cascade 13.8	1.049	Fort Frances 220	257.4
Byron 345	1.014	Boise Cascade 115	1.018	Mackenzie 220	272.3
Chisago Co. 345	1.008	ETCO 115	0.993	Lakehead 220	273.4
Chisago Co. 500	1.002	Forbes 230	1.003	Marathon 220	269.1
Drayton 230	1.021	Forbes 500	0.993	Wawa 220	262.3
Eau Claire 345	1.002	Hubbard 115	1.002	Mississagi 220	252.3
WEST FARIBAULT 115	0.995	Intl Falls 115	1.019	Fort Frances 118	119.5
LaPorte 115	1.005	Minntac 115	1.002	Lakehead 118	122.8
Maple River 230	1.028	Moranville 230	1.010	Birch 118	120.3
Marshall Tap 115	1.028	Riverton 230	1.008	Marathon 118	127.5
Owatonna 161	0.981	Running 230	1.010		0.000
Prairie 115	1.025	Shannon 230	1.018	Arrowhead 345	1.008
Prairie 230	1.019	Stinson MN 115	1.007	Stone Lake 345	1.029
Ramsey 230	1.011	Jamestown 345	1.004	Stone Lake 161	1.039
Roseau County 230	1.010	Groton 345	1.013	Gardner Park 345	1.035
Roseau County 500	1.025	Watertown 230	1.030	Weston 115	1.035
Sheyenne 230	1.028	Watertown 345	1.022	Arpin 345	1.006
Thief R Falls 115	1.017		0.000	Eau Claire 161	1.032
Tioga 230	1.023	Dorsey 230	1.045	Council Creek 161	0.972
Wahpeton 230	1.008	Dorsey 500	0.999	Hydro Lane 161	1.012
Winger 115	1.032		0.000	Wien 115	1.033
	0.000		0.000		0.000
	0.000		0.000		0.000
	0.000		0.000		0.000

Steady State Relay Margins (measured from inner blinder)

Relay Location	Manuf/Type	PSS Model	South	North	Em North
1) B10T-Tioga (South)	GE OST	SLLP	329%	N/A	N/A
2) -Tioga (North)	GE OST	SLLP	679%	N/A	N/A
3) -Tioga (Em North)	GE OST	SLLP		N/A	N/A
4) D602F-Dorsey	ATP ???	SLINOS	320%	N/A	N/A
5) -Forbes (Normal)	ATP ???	SLINOS	205%	N/A	N/A
6) -Forbes (Em Nrth)	APT S-PRO	SLINOS		N/A	N/A
8) F3M-Intl Falls	APT S-PRO	SLINOS	323%	N/A	N/A
9) G82R-Rugby	APT	SLINOS	N/A	1435%	
10) L20D-Drayton (Normal)	APT, ASEA	SLINOS	875%	N/A	N/A
11) -Drayton (Em Nrth)	ASEA RXZF2	SLINOS		N/A	N/A
12) R50M-Moranville (Norm)	APT, West	SLINOS	784%	N/A	N/A
13) -Moranville (Em N)	ASEA RXZF2	SLINOS		N/A	N/A

Appendix D.8: Summary for Sensitivity Case b34-so11aa.sav (With GI-0616 & GI-0707A, Without GI-0619, and With System Reinforcement)

```
INITIATED AT LOAD FLOW ENTRY POINT ON WED, DEC 03 2008  14:23

B34-SO11AA.SAV;SUMMER;OP LD;SYSTEM INTACT           :
ND=2079,MH=2174,MW=1524,OHMH=-196,OHMP=150,EWTW=189,BD=166


                    P O W E R   F L O W   S U M M A R Y
-----------------------------------------------------------------------------
               NDEX:      2079 MW         ECL-ARP:  550 MW
               MHEX:      2174 MW         PRI-BYN:  693 MW
               MWEX:      1524 MW         AHD-SLK:  664 MW
               KING-ECL:   860 MW         SLK-GPK:  406 MW
               COOPER S:  1140 MW         WNE-WKS:  565 MW
               FTCAL S:    689 MW         GGS:     1761 MW
               GRIS-LNC:   814 MW         QC WEST:   20 MW

           LOAD LEVELS AS PERCENT OF 2011 SUMMER PEAK:
           NORTH DAKOTA (ZONE 90,990) 2355.4 MW,  70.1% OF  3360.2 MW
           NSP             (AREA 600) 9121.5 MW,  81.9% OF  11140.0 MW
           MAN HYDRO       (AREA 667) 2348.2 MW,  77.2% OF  3043.0 MW

Load/Losses   MW  / MW       Generation        MW       Export            MW
----------- ------ -----     --------------- ------     --------------- ------
Manitoba      2348/ 284      MH total gross    5001     ATC West Import   1135
Ont. total   22150/ 478         Wpg River       568     ATC SW Import      459
     NW        915/  37         7 Sisters       170     ATC SE Import    -1181
Sask.         2150/  82      OH total gross   21884     East Bias          349
MP            2021/ 166         northwest       717     SPC>WAPA (B10T)    166
NSP           9121/ 542      SPC total gross   2406     MH>SPC  (3-230)     62
N. Dakota     2355/ 311      MP total gross    2261     MH>SPC  (FALLS)      0
Manitoba       481 MVARS     ND Cfd AC gross   3282     OH>MH  @Kenora    -196
Ont. total   13082 MVARS              net      3111     OH>MP  @Ft Fran    150
     NW        489 MVARS     NSP East gross    2709     OH E>W @Wawa       189
Sask.          502 MVARS              net      2563     OH>East USA          0
MP             540 MVARS         West gross    3033     F601C  @Forbes    1565
NSP           1919 MVARS              net      2871     D602F  @Dorsey    1813
N. Dakota      535 MVARS         Total net     7247     L20D   @Letell     237
ATC           9856/ 297      WAPA SD Hydro     1497     R50M   @Richer     159
ATC           2953 MVARS     Pleasant Valley      0     G82R   @Glenboro   -35
                             LGS/Trimont         19
                             SW MN Wind        1198
                             N DAK WIND         346
                             Swing Bus          196


Tfmrs          MVA/ Load     Ph Shifters  Deg/  MW      DC Lines          MW
------------- ---- -----     ------------ --- -----     --------------- ------
Wshell #1 7-7  112/  78%     Stinson       27/   29     CU (1,2)          1104
Wshell #2 7-7  112/  78%     Boundary Dam  16/  166     SQ BU (3,4)        500
Drayton#1 4-7   37/  27%     Whiteshell   102/  200     MH Bipole 1       1521
Drayton#2 4-7   48/  25%     Int Falls    119/  149     MH Bipole 2       1723
Dorsey #1 2-4  867/  72%     St. Lawrence  15/    0     MH (BP1+BP2)      3245
Dorsey #2 2-4  979/  81%     Arrowhead      0/  664     Miles City E>W    -149
Forbes    2-4   87/  13%                                 RCDC (15)            0
Stone Lk  3-5  244/  72%                                 Stegall (10)         0

Dorsey SC's       I/S  MVAR  Qmax/ Qmin    SVC's              MVAR  Qmax/ Qmin
----------------- --- -----  ---- -----    ----------------- -----  ---- -----
MIL 7-9G     17.0  2    532   600/ -330    Forbes        500    32   400/ -450
SCE 1-3G     18.2  3    434   480/ -240    Fargo        13.2    -5    20/ -135
SCA 4-6G     18.2  3    434   480/ -240    Watertown    20.0    61   125/  -86
                        -----  ---- -----
       Total           1400  1560/ -810    Series Caps       Num In Serv
       Margin           160                ----------------- -----------
                                           Roseau        500   2 of 2
```

Caps/Reactors	MVAR	Caps/Reactors	MVAR	Caps/Reactors	MVAR
Balta (FS) 230	0	Arrowhead 230	160	Chisago T 9 34.5	60
Drayton 115	20	Blackberry 230	47	Chisago T 10 34.5	60
Drayton 13.8	0	Minntac 115	45	Forbes 230	70
Eau Claire(FS) 161	267	Riverton 230	47	Forbes 500	600
Kohlman Lake 115	240	Roseau Co.(FS) 230	0		0
Parkers Lk(FS) 115	0	Running (FS) 230	30	Fargo 115	81
Prairie (FS) 115	40	Running react 230	0	Watertown 20	20
Ramsey (FS) 230	0	Shannon 230	72	Watertown 230	76
Red Rock 115	240		0		0
Rugby 13.8	0	Glenboro 230	0	Arrowhead 345	75
Split Rock(FS) 115	80	Laverendrye 110	98	Stone Lake 345	75
Sheyenne (FS) 115	80	Richer react 230	0	Stone Lk Reac 345	0
Wilton/Bemidji 115	20	St Vital 110	98	Stone Lake 161	40
	0		0	Grdnr Pk Reac 345	0
	0		0	Grdnr Pk Caps 115	0
	0		0	Arpin Caps 138	52
	0		0	Council Creek 138	16

Bus Voltages	V,pu	Bus Voltages	V,pu	Bus Voltages	V,kV
Adams 345	1.004	Arrowhead 230	0.988	Whiteshell 110	119.0
Alexandria 115	1.022	Badoura 115	1.009	Kenora 220	253.5
Audubon 115	1.017	Blackberry 230	1.017	Dryden 220	261.3
Bemidji 115	1.000	Boise Cascade 13.8	1.051	Fort Frances 220	257.6
Byron 345	1.014	Boise Cascade 115	1.020	Mackenzie 220	272.4
Chisago Co. 345	1.008	ETCO 115	0.992	Lakehead 220	273.4
Chisago Co. 500	1.001	Forbes 230	1.002	Marathon 220	269.1
Drayton 230	1.014	Forbes 500	0.992	Wawa 220	262.3
Eau Claire 345	1.002	Hubbard 115	0.997	Mississagi 220	252.3
WEST FARIBAULT 115	0.996	Intl Falls 115	1.020	Fort Frances 118	119.6
LaPorte 115	0.997	Minntac 115	1.001	Lakehead 118	122.8
Maple River 230	1.019	Moranville 230	1.008	Birch 118	120.3
Marshall Tap 115	1.029	Riverton 230	1.006	Marathon 118	127.5
Owatonna 161	0.981	Running 230	1.008		0.000
Prairie 115	1.014	Shannon 230	1.017	Arrowhead 345	1.008
Prairie 230	1.009	Stinson MN 115	1.007	Stone Lake 345	1.029
Ramsey 230	1.002	Jamestown 345	0.994	Stone Lake 161	1.039
Roseau County 230	1.008	Groton 345	0.995	Gardner Park 345	1.035
Roseau County 500	1.025	Watertown 230	1.030	Weston 115	1.035
Sheyenne 230	1.020	Watertown 345	1.017	Arpin 345	1.006
Thief R Falls 115	1.006		0.000	Eau Claire 161	1.032
Tioga 230	1.026	Dorsey 230	1.045	Council Creek 161	0.972
Wahpeton 230	1.001	Dorsey 500	0.999	Hydro Lane 161	1.012
Winger 115	1.022		0.000	Wien 115	1.033
	0.000		0.000		0.000
	0.000		0.000		0.000
	0.000		0.000		0.000

Steady State Relay Margins (measured from inner blinder)

Relay Location	Manuf/Type	PSS Model	South	North	Em North
1) B10T-Tioga (South)	GE OST	SLLP	330%	N/A	N/A
2) -Tioga (North)	GE OST	SLLP	680%	N/A	N/A
3) -Tioga (Em North)	GE OST	SLLP		N/A	N/A
4) D602F-Dorsey	ATP ???	SLINOS	314%	N/A	N/A
5) -Forbes (Normal)	ATP ???	SLINOS	202%	N/A	N/A
6) -Forbes (Em Nrth)	APT S-PRO	SLINOS		N/A	N/A
8) F3M-Intl Falls	APT S-PRO	SLINOS	324%	N/A	N/A
9) G82R-Rugby	APT	SLINOS	N/A	1348%	
10) L20D-Drayton (Normal)	APT, ASEA	SLINOS	854%	N/A	N/A
11) -Drayton (Em Nrth)	ASEA RXZF2	SLINOS		N/A	N/A
12) R50M-Moranville (Norm)	APT, West	SLINOS	771%	N/A	N/A
13) -Moranville (Em N)	ASEA RXZF2	SLINOS		N/A	N/A

Appendix D.9: Summary for Sensitivity Case b44-so11aa.sav (With GI-0616 & GI-0707A, Without GI-0619, NDEX=2447, and With System Reinforcement)

```
INITIATED AT LOAD FLOW ENTRY POINT ON MON, DEC 08 2008  11:14

B44-SO11AA.SAV;SUMMER;OP LD;SYSTEM INTACT           :
ND=2447,MH=2174,MW=1524,OHMH=-196,OHMP=150,EWTW=189,BD=166


                    P O W E R   F L O W   S U M M A R Y
-----------------------------------------------------------------------------
               NDEX:      2447 MW         ECL-ARP:  545 MW
               MHEX:      2174 MW         PRI-BYN:  686 MW
               MWEX:      1524 MW         AHD-SLK:  669 MW
               KING-ECL:   855 MW         SLK-GPK:  408 MW
               COOPER S:  1166 MW         WNE-WKS:  573 MW
               FTCAL S:    710 MW         GGS:     1769 MW
               GRIS-LNC:   830 MW         QC WEST:   11 MW

           LOAD LEVELS AS PERCENT OF 2011 SUMMER PEAK:
           NORTH DAKOTA (ZONE 90,990) 2249.6 MW,  66.9% OF  3360.2 MW
           NSP             (AREA 600) 9342.3 MW,  83.9% OF  11140.0 MW
           MAN HYDRO       (AREA 667) 2348.2 MW,  77.2% OF  3043.0 MW

Load/Losses   MW  / MW       Generation        MW       Export            MW
----------- ------ -----     --------------- ------     --------------- ------
Manitoba      2348/ 283      MH total gross    5000     ATC West Import   1130
Ont. total   22150/ 478         Wpg River       568     ATC SW Import      452
     NW        915/  37         7 Sisters       170     ATC SE Import    -1200
Sask.         2150/  82      OH total gross   21884     East Bias          411
MP            2021/ 182         northwest       717     SPC>WAPA (B10T)    166
NSP           9342/ 576      SPC total gross   2406     MH>SPC  (3-230)     62
N. Dakota     2249/ 333      MP total gross    2261     MH>SPC  (FALLS)      0
Manitoba       481 MVARS     ND Cfd AC gross   3282     OH>MH  @Kenora    -196
Ont. total   13082 MVARS              net      3111     OH>MP  @Ft Fran    150
     NW        489 MVARS     NSP East gross    2709     OH E>W @Wawa       189
Sask.          502 MVARS              net      2563     OH>East USA          0
MP             540 MVARS         West gross    3033     F601C  @Forbes    1611
NSP           1964 MVARS              net      2871     D602F  @Dorsey    1851
N. Dakota      512 MVARS         Total net     7247     L20D   @Letell     212
ATC           9825/ 297      WAPA SD Hydro     1497     R50M   @Richer     162
ATC           2943 MVARS     Pleasant Valley      0     G82R   @Glenboro   -52
                             LGS/Trimont         19
                             SW MN Wind        1197
                             N DAK WIND         346
                             Swing Bus          194


Tfmrs          MVA/ Load     Ph Shifters  Deg/  MW      DC Lines          MW
------------- ---- -----     ------------ --- -----     --------------- ------
Wshell #1 7-7  112/  78%     Stinson       27/   30     CU (1,2)          1104
Wshell #2 7-7  112/  78%     Boundary Dam  19/  167     SQ BU (3,4)        500
Drayton#1 4-7   34/  24%     Whiteshell   105/  201     MH Bipole 1       1521
Drayton#2 4-7   44/  23%     Int Falls    121/  149     MH Bipole 2       1722
Dorsey #1 2-4  893/  74%     St. Lawrence  15/    0     MH (BP1+BP2)      3244
Dorsey #2 2-4 1005/  83%     Arrowhead      0/  669     Miles City E>W    -149
Forbes    2-4   86/  12%                                 RCDC (15)            0
Stone Lk  3-5  246/  73%                                 Stegall (10)         0

Dorsey SC's       I/S  MVAR  Qmax/ Qmin    SVC's              MVAR  Qmax/ Qmin
----------------- --- -----  ---- -----    ----------------- -----  ---- -----
MIL 7-9G     17.0  2    556   600/ -330    Forbes        500    43   400/ -450
SCE 1-3G     18.2  3    454   480/ -240    Fargo        13.2    -4    20/ -135
SCA 4-6G     18.2  3    454   480/ -240    Watertown    20.0   101   125/  -86
                        -----  ---- -----
       Total           1465  1560/ -810    Series Caps       Num In Serv
       Margin            95                 ----------------- -----------
                                            Roseau        500   2 of 2
```

Caps/Reactors	MVAR	Caps/Reactors	MVAR	Caps/Reactors	MVAR
Balta (FS) 230	0	Arrowhead 230	160	Chisago T 9 34.5	60
Drayton 115	20	Blackberry 230	47	Chisago T 10 34.5	60
Drayton 13.8	0	Minntac 115	45	Forbes 230	70
Eau Claire(FS) 161	267	Riverton 230	47	Forbes 500	600
Kohlman Lake 115	240	Roseau Co.(FS) 230	0		0
Parkers Lk(FS) 115	0	Running (FS) 230	30	Fargo 115	81
Prairie (FS) 115	40	Running react 230	0	Watertown 20	20
Ramsey (FS) 230	0	Shannon 230	72	Watertown 230	76
Red Rock 115	240		0		0
Rugby 13.8	0	Glenboro 230	0	Arrowhead 345	75
Split Rock(FS) 115	80	Laverendrye 110	98	Stone Lake 345	75
Sheyenne (FS) 115	80	Richer react 230	0	Stone Lk Reac 345	0
Wilton/Bemidji 115	20	St Vital 110	98	Stone Lake 161	40
	0		0	Grdnr Pk Reac 345	0
	0		0	Grdnr Pk Caps 115	0
	0		0	Arpin Caps 138	52
	0		0	Council Creek 138	16

Bus Voltages	V,pu	Bus Voltages	V,pu	Bus Voltages	V,kV
Adams 345	1.004	Arrowhead 230	0.983	Whiteshell 110	119.0
Alexandria 115	1.017	Badoura 115	1.007	Kenora 220	253.4
Audubon 115	1.014	Blackberry 230	1.014	Dryden 220	261.2
Bemidji 115	1.001	Boise Cascade 13.8	1.051	Fort Frances 220	257.5
Byron 345	1.014	Boise Cascade 115	1.019	Mackenzie 220	272.3
Chisago Co. 345	1.001	ETCO 115	0.987	Lakehead 220	273.4
Chisago Co. 500	0.994	Forbes 230	0.995	Marathon 220	269.1
Drayton 230	1.021	Forbes 500	0.985	Wawa 220	262.3
Eau Claire 345	1.000	Hubbard 115	0.995	Mississagi 220	252.3
WEST FARIBAULT 115	0.985	Intl Falls 115	1.020	Fort Frances 118	119.6
LaPorte 115	0.996	Minntac 115	0.996	Lakehead 118	122.8
Maple River 230	1.019	Moranville 230	1.003	Birch 118	120.3
Marshall Tap 115	1.027	Riverton 230	1.007	Marathon 118	127.5
Owatonna 161	0.974	Running 230	1.001		0.000
Prairie 115	1.019	Shannon 230	1.013	Arrowhead 345	1.002
Prairie 230	1.014	Stinson MN 115	1.002	Stone Lake 345	1.024
Ramsey 230	1.006	Jamestown 345	0.994	Stone Lake 161	1.034
Roseau County 230	1.003	Groton 345	0.995	Gardner Park 345	1.035
Roseau County 500	1.029	Watertown 230	1.030	Weston 115	1.035
Sheyenne 230	1.019	Watertown 345	1.018	Arpin 345	1.006
Thief R Falls 115	1.011		0.000	Eau Claire 161	1.030
Tioga 230	1.024	Dorsey 230	1.045	Council Creek 161	0.971
Wahpeton 230	0.999	Dorsey 500	1.002	Hydro Lane 161	1.010
Winger 115	1.024		0.000	Wien 115	1.033
	0.000		0.000		0.000
	0.000		0.000		0.000
	0.000		0.000		0.000

Steady State Relay Margins (measured from inner blinder)

Relay Location	Manuf/Type	PSS Model	South	North	Em North
1) B10T-Tioga (South)	GE OST	SLLP	327%	N/A	N/A
2) -Tioga (North)	GE OST	SLLP	675%	N/A	N/A
3) -Tioga (Em North)	GE OST	SLLP		N/A	N/A
4) D602F-Dorsey	ATP ???	SLINOS	297%	N/A	N/A
5) -Forbes (Normal)	ATP ???	SLINOS	190%	N/A	N/A
6) -Forbes (Em Nrth)	APT S-PRO	SLINOS		N/A	N/A
8) F3M-Intl Falls	APT S-PRO	SLINOS	324%	N/A	N/A
9) G82R-Rugby	APT	SLINOS	N/A	1057%	
10) L20D-Drayton (Normal)	APT, ASEA	SLINOS	993%	N/A	N/A
11) -Drayton (Em Nrth)	ASEA RXZF2	SLINOS		N/A	N/A
12) R50M-Moranville (Norm)	APT, West	SLINOS	739%	N/A	N/A
13) -Moranville (Em N)	ASEA RXZF2	SLINOS		N/A	N/A

Appendix D.10: Summary for Sensitivity Case c14-so11aa.sav (With GI-0616 & GI-0707A, Without GI-0619, With Jamestown 345/230 kV Transformer)

```
INITIATED AT LOAD FLOW ENTRY POINT ON THU, JAN 22 2009  15:18

C14-SO11AA.SAV;SUMMER;OP LD;SYSTEM INTACT           :
ND=2079,MH=2174,MW=1524,OHMH=-196,OHMP=150,EWTW=189,BD=166


                    P O W E R   F L O W   S U M M A R Y
-----------------------------------------------------------------------------
               NDEX:      2079 MW         ECL-ARP:  551 MW
               MHEX:      2174 MW         PRI-BYN:  693 MW
               MWEX:      1524 MW         AHD-SLK:  663 MW
               KING-ECL:   861 MW         SLK-GPK:  406 MW
               COOPER S:  1143 MW         WNE-WKS:  568 MW
               FTCAL S:    688 MW         GGS:     1772 MW
               GRIS-LNC:   821 MW         QC WEST:   18 MW

           LOAD LEVELS AS PERCENT OF 2011 SUMMER PEAK:
           NORTH DAKOTA (ZONE 90,990) 2360.0 MW,  70.2% OF  3360.2 MW
           NSP             (AREA 600) 9110.7 MW,  81.8% OF  11140.0 MW
           MAN HYDRO       (AREA 667) 2348.2 MW,  77.2% OF  3043.0 MW

Load/Losses   MW  / MW       Generation        MW       Export            MW
----------- ------ -----     --------------- ------     --------------- ------
Manitoba      2348/ 285      MH total gross    5001     ATC West Import   1136
Ont. total   22150/ 478         Wpg River       568     ATC SW Import      459
     NW        915/  37         7 Sisters       170     ATC SE Import    -1180
Sask.         2150/  82      OH total gross   21884     East Bias          342
MP            2021/ 164         northwest       717     SPC>WAPA (B10T)    166
NSP           9110/ 540      SPC total gross   2406     MH>SPC  (3-230)     62
N. Dakota     2360/ 306      MP total gross    2261     MH>SPC  (FALLS)      0
Manitoba       481 MVARS     ND Cfd AC gross   3282     OH>MH  @Kenora    -196
Ont. total   13082 MVARS              net      3111     OH>MP  @Ft Fran    150
     NW        489 MVARS     NSP East gross    2709     OH E>W @Wawa       189
Sask.          502 MVARS              net      2563     OH>East USA          0
MP             540 MVARS         West gross    3033     F601C  @Forbes    1560
NSP           1917 MVARS              net      2871     D602F  @Dorsey    1809
N. Dakota      536 MVARS         Total net     7247     L20D   @Letell     238
ATC           9858/ 297      WAPA SD Hydro     1497     R50M   @Richer     158
ATC           2953 MVARS     Pleasant Valley      0     G82R   @Glenboro   -32
                             LGS/Trimont         19
                             SW MN Wind        1198
                             N DAK WIND         346
                             Swing Bus          205


Tfmrs          MVA/ Load     Ph Shifters  Deg/  MW      DC Lines          MW
------------- ---- -----     ------------ --- -----     --------------- ------
Wshell #1 7-7  112/  78%     Stinson       27/   29     CU (1,2)          1104
Wshell #2 7-7  112/  78%     Boundary Dam  15/  166     SQ BU (3,4)        500
Drayton#1 4-7   38/  27%     Whiteshell   102/  200     MH Bipole 1       1521
Drayton#2 4-7   48/  26%     Int Falls    119/  149     MH Bipole 2       1723
Dorsey #1 2-4  865/  72%     St. Lawrence  15/    0     MH (BP1+BP2)      3245
Dorsey #2 2-4  977/  81%     Arrowhead      0/  663     Miles City E>W    -150
Forbes    2-4   87/  13%                                 RCDC (15)            0
Stone Lk  3-5  243/  72%                                 Stegall (10)         0

Dorsey SC's       I/S  MVAR  Qmax/ Qmin    SVC's              MVAR  Qmax/ Qmin
----------------- --- -----  ---- -----    ----------------- -----  ---- -----
MIL 7-9G     17.0  2    529   600/ -330    Forbes        500    31   400/ -450
SCE 1-3G     18.2  3    432   480/ -240    Fargo        13.2     9    20/ -135
SCA 4-6G     18.2  3    432   480/ -240    Watertown    20.0    50   125/  -86
                        -----  ---- -----
       Total           1394  1560/ -810    Series Caps       Num In Serv
       Margin           166                 ----------------- -----------
                                            Roseau        500   2 of 2
```

Caps/Reactors	MVAR	Caps/Reactors	MVAR	Caps/Reactors	MVAR
Balta (FS) 230	0	Arrowhead 230	160	Chisago T 9 34.5	60
Drayton 115	20	Blackberry 230	47	Chisago T 10 34.5	60
Drayton 13.8	0	Minntac 115	45	Forbes 230	70
Eau Claire(FS) 161	267	Riverton 230	47	Forbes 500	600
Kohlman Lake 115	240	Roseau Co.(FS) 230	0		0
Parkers Lk(FS) 115	0	Running (FS) 230	30	Fargo 115	81
Prairie (FS) 115	40	Running react 230	0	Watertown 20	20
Ramsey (FS) 230	0	Shannon 230	72	Watertown 230	76
Red Rock 115	240		0		0
Rugby 13.8	0	Glenboro 230	0	Arrowhead 345	75
Split Rock(FS) 115	80	Laverendrye 110	98	Stone Lake 345	75
Sheyenne (FS) 115	80	Richer react 230	0	Stone Lk Reac 345	0
Wilton/Bemidji 115	20	St Vital 110	98	Stone Lake 161	40
	0		0	Grdnr Pk Reac 345	0
	0		0	Grdnr Pk Caps 115	0
	0		0	Arpin Caps 138	52
	0		0	Council Creek 138	16

Bus Voltages	V,pu	Bus Voltages	V,pu	Bus Voltages	V,kV
Adams 345	1.004	Arrowhead 230	0.989	Whiteshell 110	119.0
Alexandria 115	1.022	Badoura 115	1.009	Kenora 220	253.5
Audubon 115	1.015	Blackberry 230	1.017	Dryden 220	261.3
Bemidji 115	0.998	Boise Cascade 13.8	1.052	Fort Frances 220	257.7
Byron 345	1.014	Boise Cascade 115	1.020	Mackenzie 220	272.4
Chisago Co. 345	1.008	ETCO 115	0.992	Lakehead 220	273.4
Chisago Co. 500	1.002	Forbes 230	1.002	Marathon 220	269.1
Drayton 230	1.013	Forbes 500	0.993	Wawa 220	262.3
Eau Claire 345	1.002	Hubbard 115	0.997	Mississagi 220	252.3
WEST FARIBAULT 115	0.996	Intl Falls 115	1.021	Fort Frances 118	119.7
LaPorte 115	0.995	Minntac 115	1.001	Lakehead 118	122.8
Maple River 230	1.014	Moranville 230	1.008	Birch 118	120.3
Marshall Tap 115	1.029	Riverton 230	1.006	Marathon 118	127.5
Owatonna 161	0.981	Running 230	1.008		0.000
Prairie 115	1.013	Shannon 230	1.018	Arrowhead 345	1.008
Prairie 230	1.008	Stinson MN 115	1.007	Stone Lake 345	1.029
Ramsey 230	1.004	Jamestown 345	0.978	Stone Lake 161	1.039
Roseau County 230	1.008	Groton 345	1.002	Gardner Park 345	1.035
Roseau County 500	1.025	Watertown 230	1.030	Weston 115	1.035
Sheyenne 230	1.016	Watertown 345	1.018	Arpin 345	1.006
Thief R Falls 115	1.004		0.000	Eau Claire 161	1.032
Tioga 230	1.026	Dorsey 230	1.045	Council Creek 161	0.972
Wahpeton 230	1.000	Dorsey 500	0.999	Hydro Lane 161	1.012
Winger 115	1.019		0.000	Wien 115	1.033
	0.000		0.000		0.000
	0.000		0.000		0.000
	0.000		0.000		0.000

Steady State Relay Margins (measured from inner blinder)

Relay Location	Manuf/Type	PSS Model	South	North	Em North
1) B10T-Tioga (South)	GE OST	SLLP	330%	N/A	N/A
2) -Tioga (North)	GE OST	SLLP	680%	N/A	N/A
3) -Tioga (Em North)	GE OST	SLLP		N/A	N/A
4) D602F-Dorsey	ATP ???	SLINOS	317%	N/A	N/A
5) -Forbes (Normal)	ATP ???	SLINOS	204%	N/A	N/A
6) -Forbes (Em Nrth)	APT S-PRO	SLINOS		N/A	N/A
8) F3M-Intl Falls	APT S-PRO	SLINOS	325%	N/A	N/A
9) G82R-Rugby	APT	SLINOS	N/A	1408%	
10) L20D-Drayton (Normal)	APT, ASEA	SLINOS	846%	N/A	N/A
11) -Drayton (Em Nrth)	ASEA RXZF2	SLINOS		N/A	N/A
12) R50M-Moranville (Norm)	APT, West	SLINOS	775%	N/A	N/A
13) -Moranville (Em N)	ASEA RXZF2	SLINOS		N/A	N/A

Appendix D.11: Summary for Sensitivity Case c64-so11aa.sav (With GI-0616 & GI-0707A, Without GI-0619, Without G531 & G607, With Jamestown 345/230 kV Transformer)

```
INITIATED AT LOAD FLOW ENTRY POINT ON THU, JAN 22 2009  15:21

C64-SO11AA.SAV;SUMMER;OP LD;SYSTEM INTACT           :
ND=2079,MH=2174,MW=1525,OHMH=-196,OHMP=150,EWTW=189,BD=166


                    P O W E R   F L O W   S U M M A R Y
-----------------------------------------------------------------------------
               NDEX:      2079 MW         ECL-ARP:  551 MW
               MHEX:      2174 MW         PRI-BYN:  693 MW
               MWEX:      1525 MW         AHD-SLK:  664 MW
               KING-ECL:   861 MW         SLK-GPK:  406 MW
               COOPER S:  1140 MW         WNE-WKS:  567 MW
               FTCAL S:    687 MW         GGS:     1772 MW
               GRIS-LNC:   821 MW         QC WEST:   17 MW

           LOAD LEVELS AS PERCENT OF 2011 SUMMER PEAK:
           NORTH DAKOTA (ZONE 90,990) 2275.2 MW,  67.7% OF  3360.2 MW
           NSP             (AREA 600) 9115.2 MW,  81.8% OF  11140.0 MW
           MAN HYDRO       (AREA 667) 2348.2 MW,  77.2% OF  3043.0 MW

Load/Losses   MW  / MW       Generation        MW       Export            MW
----------- ------ -----     --------------- ------     --------------- ------
Manitoba      2348/ 285      MH total gross    5001     ATC West Import   1136
Ont. total   22150/ 478         Wpg River       568     ATC SW Import      459
     NW        915/  37         7 Sisters       170     ATC SE Import    -1181
Sask.         2150/  82      OH total gross   21884     East Bias          346
MP            2021/ 165         northwest       717     SPC>WAPA (B10T)    166
NSP           9115/ 540      SPC total gross   2406     MH>SPC  (3-230)     61
N. Dakota     2275/ 298      MP total gross    2261     MH>SPC  (FALLS)      0
Manitoba       481 MVARS     ND Cfd AC gross   3257     OH>MH  @Kenora    -196
Ont. total   13082 MVARS              net      3086     OH>MP  @Ft Fran    150
     NW        489 MVARS     NSP East gross    2709     OH E>W @Wawa       189
Sask.          502 MVARS              net      2563     OH>East USA          0
MP             540 MVARS         West gross    3033     F601C  @Forbes    1560
NSP           1918 MVARS              net      2871     D602F  @Dorsey    1807
N. Dakota      517 MVARS         Total net     7247     L20D   @Letell     236
ATC           9857/ 297      WAPA SD Hydro     1497     R50M   @Richer     158
ATC           2953 MVARS     Pleasant Valley      0     G82R   @Glenboro   -27
                             LGS/Trimont         19
                             SW MN Wind        1198
                             N DAK WIND         346
                             Swing Bus          284


Tfmrs          MVA/ Load     Ph Shifters  Deg/  MW      DC Lines          MW
------------- ---- -----     ------------ --- -----     --------------- ------
Wshell #1 7-7  112/  78%     Stinson       27/   29     CU (1,2)          1104
Wshell #2 7-7  112/  78%     Boundary Dam  15/  166     SQ BU (3,4)        500
Drayton#1 4-7   37/  26%     Whiteshell   102/  200     MH Bipole 1       1521
Drayton#2 4-7   47/  25%     Int Falls    119/  149     MH Bipole 2       1722
Dorsey #1 2-4  864/  72%     St. Lawrence  15/    0     MH (BP1+BP2)      3244
Dorsey #2 2-4  975/  81%     Arrowhead      0/  664     Miles City E>W    -149
Forbes    2-4   86/  12%                                 RCDC (15)            0
Stone Lk  3-5  243/  72%                                 Stegall (10)         0

Dorsey SC's       I/S  MVAR  Qmax/ Qmin    SVC's              MVAR  Qmax/ Qmin
----------------- --- -----  ---- -----    ----------------- -----  ---- -----
MIL 7-9G     17.0  2    525   600/ -330    Forbes        500    30   400/ -450
SCE 1-3G     18.2  3    428   480/ -240    Fargo        13.2    -7    20/ -135
SCA 4-6G     18.2  3    428   480/ -240    Watertown    20.0    43   125/  -86
                        -----  ---- -----
       Total           1383  1560/ -810    Series Caps       Num In Serv
       Margin           177                 ----------------- -----------
                                            Roseau        500   2 of 2
```

Caps/Reactors	MVAR	Caps/Reactors	MVAR	Caps/Reactors	MVAR
Balta (FS) 230	0	Arrowhead 230	160	Chisago T 9 34.5	60
Drayton 115	20	Blackberry 230	47	Chisago T 10 34.5	60
Drayton 13.8	0	Minntac 115	45	Forbes 230	70
Eau Claire(FS) 161	267	Riverton 230	47	Forbes 500	600
Kohlman Lake 115	240	Roseau Co.(FS) 230	0		0
Parkers Lk(FS) 115	0	Running (FS) 230	30	Fargo 115	81
Prairie (FS) 115	40	Running react 230	0	Watertown 20	20
Ramsey (FS) 230	0	Shannon 230	72	Watertown 230	76
Red Rock 115	240		0		0
Rugby 13.8	0	Glenboro 230	0	Arrowhead 345	75
Split Rock(FS) 115	80	Laverendrye 110	98	Stone Lake 345	75
Sheyenne (FS) 115	80	Richer react 230	0	Stone Lk Reac 345	0
Wilton/Bemidji 115	20	St Vital 110	98	Stone Lake 161	40
	0		0	Grdnr Pk Reac 345	0
	0		0	Grdnr Pk Caps 115	0
	0		0	Arpin Caps 138	52
	0		0	Council Creek 138	16

Bus Voltages	V,pu	Bus Voltages	V,pu	Bus Voltages	V,kV
Adams 345	1.004	Arrowhead 230	0.989	Whiteshell 110	119.0
Alexandria 115	1.026	Badoura 115	1.012	Kenora 220	253.5
Audubon 115	1.020	Blackberry 230	1.017	Dryden 220	261.3
Bemidji 115	1.005	Boise Cascade 13.8	1.052	Fort Frances 220	257.7
Byron 345	1.014	Boise Cascade 115	1.020	Mackenzie 220	272.4
Chisago Co. 345	1.009	ETCO 115	0.993	Lakehead 220	273.4
Chisago Co. 500	1.002	Forbes 230	1.003	Marathon 220	269.1
Drayton 230	1.018	Forbes 500	0.994	Wawa 220	262.3
Eau Claire 345	1.002	Hubbard 115	1.000	Mississagi 220	252.3
WEST FARIBAULT 115	0.996	Intl Falls 115	1.021	Fort Frances 118	119.7
LaPorte 115	1.001	Minntac 115	1.002	Lakehead 118	122.8
Maple River 230	1.019	Moranville 230	1.009	Birch 118	120.3
Marshall Tap 115	1.029	Riverton 230	1.008	Marathon 118	127.5
Owatonna 161	0.981	Running 230	1.009		0.000
Prairie 115	1.020	Shannon 230	1.018	Arrowhead 345	1.008
Prairie 230	1.015	Stinson MN 115	1.008	Stone Lake 345	1.029
Ramsey 230	1.010	Jamestown 345	0.984	Stone Lake 161	1.039
Roseau County 230	1.009	Groton 345	1.003	Gardner Park 345	1.035
Roseau County 500	1.025	Watertown 230	1.030	Weston 115	1.035
Sheyenne 230	1.020	Watertown 345	1.019	Arpin 345	1.006
Thief R Falls 115	1.011		0.000	Eau Claire 161	1.032
Tioga 230	1.024	Dorsey 230	1.045	Council Creek 161	0.972
Wahpeton 230	1.004	Dorsey 500	0.999	Hydro Lane 161	1.012
Winger 115	1.026		0.000	Wien 115	1.033
	0.000		0.000		0.000
	0.000		0.000		0.000
	0.000		0.000		0.000

Steady State Relay Margins (measured from inner blinder)

Relay Location	Manuf/Type	PSS Model	South	North	Em North
1) B10T-Tioga (South)	GE OST	SLLP	330%	N/A	N/A
2) -Tioga (North)	GE OST	SLLP	680%	N/A	N/A
3) -Tioga (Em North)	GE OST	SLLP		N/A	N/A
4) D602F-Dorsey	ATP ???	SLINOS	319%	N/A	N/A
5) -Forbes (Normal)	ATP ???	SLINOS	205%	N/A	N/A
6) -Forbes (Em Nrth)	APT S-PRO	SLINOS		N/A	N/A
8) F3M-Intl Falls	APT S-PRO	SLINOS	325%	N/A	N/A
9) G82R-Rugby	APT	SLINOS	N/A	1520%	
10) L20D-Drayton (Normal)	APT, ASEA	SLINOS	864%	N/A	N/A
11) -Drayton (Em Nrth)	ASEA RXZF2	SLINOS		N/A	N/A
12) R50M-Moranville (Norm)	APT, West	SLINOS	779%	N/A	N/A
13) -Moranville (Em N)	ASEA RXZF2	SLINOS		N/A	N/A

APPENDIX E – STABILITY ANALYSIS – RESULTS

Appendix E.1: Simulation Summary Tables for Baseline Analysis (Case b02)

1	**Case No.**	1	2	3	4	5
2	**Case Name**	b02-so11aa-zss	b02-so11aa-ac3	b02-so11aa-ad3	b02-so11aa-ag1	b02-so11aa-ag3
3	**Disturbance**	zss	ac3	ad3	ag1	ag3
4	**Prior Outage**	None	None	None	None	None
5	**Date/Time**	OCT 28 2008 14:53	OCT 28 2008 14:54	OCT 28 2008 14:56	OCT 28 2008 15:40	OCT 28 2008 14:58
6	**Comments**					
7						
8	**Steady State Flows**					
9	NDEX / EAST BIAS	2080 / 345	2080 / 345	2080 / 345	2080 / 345	2080 / 345
10	MHEX / L20D	2171 / 249	2171 / 249	2171 / 249	2171 / 249	2171 / 249
11	ECL-ARP / PRI-BYN	551 / 689	551 / 689	551 / 689	551 / 689	551 / 689
12	MWEX / AHD-SLK	1528 / 667	1528 / 667	1528 / 667	1528 / 667	1528 / 667
13	D602F / F601C	1790 / 1544	1790 / 1544	1790 / 1544	1790 / 1544	1790 / 1544
14	B10T / MH>SPC	165 / 61	165 / 61	165 / 61	165 / 61	165 / 61
15	OH E-W / OH>MH	190 / -196	190 / -196	190 / -196	190 / -196	190 / -196
16	R50M / OH>MP	156 / 150	156 / 150	156 / 150	156 / 150	156 / 150
17	G82R	-25	-25	-25	-25	-25
18	Dorsey bipole / CU bipole	3241 / 1104	3241 / 1104	3241 / 1104	3241 / 1104	3241 / 1104
19	Dorsey Reserve / Wtrtn SVC	196 / 36	196 / 36	196 / 36	196 / 36	196 / 36
20	Forbes SVC / MSC	-3 / 600	-3 / 600	-3 / 600	-3 / 600	-3 / 600
21	RCDC	0	0	0	0	0
22	**Steady State Vltgs**					
23	Dorsey 500/Dorsey 230	1.000 / 1.045	1.000 / 1.045	1.000 / 1.045	1.000 / 1.045	1.000 / 1.045
24	Roseau 500/Forbes 500	1.014 / 0.995	1.014 / 0.995	1.014 / 0.995	1.014 / 0.995	1.014 / 0.995
25	Chisago 500/EauClaire 345	1.004 / 1.004	1.004 / 1.004	1.004 / 1.004	1.004 / 1.004	1.004 / 1.004
26	Int Falls 115/Badoura 115	1.020 / 1.013	1.020 / 1.013	1.020 / 1.013	1.020 / 1.013	1.020 / 1.013
27	Drayton 230/Groton 345	1.016 / 1.007	1.016 / 1.007	1.016 / 1.007	1.016 / 1.007	1.016 / 1.007
28	**SS OS Relay Margins**					
29	D602F at Forbes/Dorsey	211% / 328%	211% / 328%	211% / 328%	211% / 328%	211% / 328%
30	82R at Rugby/L20D at Drayton	999% / 804%	999% / 804%	999% / 804%	999% / 804%	999% / 804%
31	R50M/F3M	797% / 323%	797% / 323%	797% / 323%	797% / 323%	797% / 323%
32	B10T	330%	330%	330%	330%	330%
33	**Min/MaxTransientVltg**					
34	Arrowhd 230	1.00 | 1.00	0.97 | 1.01	0.98 | 1.02	0.97 | 1.01	0.97 | 1.02
35	Boise 115	1.02 | 1.02	0.99 | 1.05	1.00 | 1.03	0.99 | 1.06	0.99 | 1.06
36	Dorsey 230	1.04 | 1.04	1.02 | 1.06	1.03 | 1.06	1.02 | 1.06	1.02 | 1.06
37	Forbes 230	1.00 | 1.01	0.98 | 1.02	0.98 | 1.02	0.98 | 1.02	0.98 | 1.02
38	Riverton 230	1.01 | 1.01	0.96 | 1.04	0.98 | 1.06	0.97 | 1.05	0.96 | 1.04
39	Coal Creek 230	1.03 | 1.03	0.95 | 1.12	0.97 | 1.12	0.96 | 1.12	0.96 | 1.12
40	Jamestown 345	0.96 | 0.96	0.84 | 1.02	0.89 | 1.04	0.85 | 1.03	0.84 | 1.01
41	Drayton 230	1.02 | 1.02	0.98 | 1.10	0.99 | 1.08	0.98 | 1.08	0.98 | 1.10
42	Groton 345	1.01 | 1.01	0.83 | 1.04	0.87 | 1.06	0.83 | 1.05	0.83 | 1.05
43	Minong 161	1.03 | 1.03	1.00 | 1.04	1.01 | 1.05	1.00 | 1.04	1.00 | 1.04
44	Wahpeton 115	1.01 | 1.01	0.91 | 1.06	0.95 | 1.08	0.92 | 1.07	0.91 | 1.06
45	Watertown 345	1.02 | 1.02	0.93 | 1.04	0.94 | 1.05	0.92 | 1.04	0.92 | 1.04
46	**Dynamic Voltage Warnings**					
47		none	none	none	none	none
48						
49						
50						
51						
52						
53						
54	Worst Case Angle Damping					
55	Dorsey SUVP / UdHold					
56	Forbes DC Red (DCAR)	505%	397%	382%	398%	394%
57	K22W (max +dP @ t, d-ang)	0.0@(0.21667,0.0)	13.8@(2.59165,0.7)	15.6@(2.46666,-1.1)	2.2@(0.13333,-0.1)	15.8@(2.56665,0.6)
58	K22W (max -dP @ t, d-ang)	0.5@(4.88329,0.3)	23.6@(0.82500,6.7)	15.0@(0.72500,3.8)	24.0@(0.84166,6.5)	24.7@(0.81666,7.3)
59	K22W (max d-ang @ t, dP)	0.3@(4.99995,-0.5)	8.9@(1.10000,-11.8)	5.4@(0.99166,-5.5)	8.9@(1.10833,-10.7)	9.5@(1.07500,-12.9)
60	**OS Rel Trip / Marg**					
61	MH - OH					
62	D602F at Forbes/Dorsey	211% / 328%	151% / 230%	172% / 264%	152% / 231%	149% / 227%
63	82R at Rugby/L20D at Drayton	999% / 803%	999% / 608%	999% / 621%	999% / 598%	999% / 587%
64	R50M / F3M	796% / 323%	623% / 266%	685% / 275%	625% / 264%	618% / 263%
65	B10T	330%	182%	176%	173%	165%
66	**FSCAPS (SS/Unav/Final)**					
67	Balta 230	(0 | 0 | 0)	(0 | 1 | 0)	(0 | 0 | 0)	(0 | 0 | 0)	(0 | 1 | 0)
68	Eau Cl 345 / Park Lk 115	(3 | 3 | 3) / (0 | 0 | 0)	(3 | 3 | 3) / (0 | 0 | 0)	(3 | 3 | 3) / (0 | 0 | 0)	(3 | 3 | 3) / (0 | 0 | 0)	(3 | 3 | 3) / (0 | 0 | 0)
69	Prairie 115 / Ramsey 230	(1 | 1 | 1) / (0 | 0 | 0)	(1 | 5 | 2) / (0 | 2 | 1)	(1 | 2 | 1) / (0 | 2 | 1)	(1 | 5 | 2) / (0 | 2 | 1)	(1 | 5 | 2) / (0 | 2 | 1)
70	Roseau 230 / Running 230	(0 | 0 | 0) / (1 | 1 | 1)	(0 | 1 | 1) / (1 | 2 | 1)	(0 | 0 | 0) / (1 | 1 | 1)	(0 | 1 | 1) / (1 | 2 | 2)	(0 | 1 | 1) / (1 | 2 | 1)
71	Shey 115 / Split Rock 115	(2 | 2 | 2) / (1 | 1 | 1)	(2 | 5 | 4) / (1 | 1 | 1)	(2 | 5 | 2) / (1 | 1 | 1)	(2 | 5 | 3) / (1 | 1 | 1)	(2 | 5 | 4) / (1 | 2 | 2)
72	**Damping Performance**	N/A	N/A	N/A	N/A	N/A

Appendix E.1: Simulation Summary Tables for Baseline Analysis (Case b02)

1	**Case No.**	6	7	8	9	10
2	**Case Name**	b02-so11aa-bl3	b02-so11aa-eb3	b02-so11aa-ec3	b02-so11aa-ecs	b02-so11aa-ef3
3	**Disturbance**	bl3	eb3	ec3	ecs	ef3
4	**Prior Outage**	None	None	None	None	None
5	**Date/Time**	OCT 28 2008 15:00	OCT 28 2008 15:02	OCT 28 2008 15:04	OCT 28 2008 15:05	OCT 28 2008 15:07
6	**Comments**					
7						
8	**Steady State Flows**					
9	NDEX / EAST BIAS	2080 / 345	2080 / 345	2080 / 345	2080 / 345	2080 / 345
10	MHEX / L20D	2171 / 249	2171 / 249	2171 / 249	2171 / 249	2171 / 249
11	ECL-ARP / PRI-BYN	551 / 689	551 / 689	551 / 689	551 / 689	551 / 689
12	MWEX / AHD-SLK	1528 / 667	1528 / 667	1528 / 667	1528 / 667	1528 / 667
13	D602F / F601C	1790 / 1544	1790 / 1544	1790 / 1544	1790 / 1544	1790 / 1544
14	B10T / MH>SPC	165 / 61	165 / 61	165 / 61	165 / 61	165 / 61
15	OH E-W / OH>MH	190 / -196	190 / -196	190 / -196	190 / -196	190 / -196
16	R50M / OH>MP	156 / 150	156 / 150	156 / 150	156 / 150	156 / 150
17	G82R	-25	-25	-25	-25	-25
18	Dorsey bipole / CU bipole	3241 / 1104	3241 / 1104	3241 / 1104	3241 / 1104	3241 / 1104
19	Dorsey Reserve / Wtrtn SVC	196 / 36	196 / 36	196 / 36	196 / 36	196 / 36
20	Forbes SVC / MSC	-3 / 600	-3 / 600	-3 / 600	-3 / 600	-3 / 600
21	RCDC	0	0	0	0	0
22	**Steady State Vltgs**					
23	Dorsey 500/Dorsey 230	1.000 / 1.045	1.000 / 1.045	1.000 / 1.045	1.000 / 1.045	1.000 / 1.045
24	Roseau 500/Forbes 500	1.014 / 0.995	1.014 / 0.995	1.014 / 0.995	1.014 / 0.995	1.014 / 0.995
25	Chisago 500/EauClaire 345	1.004 / 1.004	1.004 / 1.004	1.004 / 1.004	1.004 / 1.004	1.004 / 1.004
26	Int Falls 115/Badoura 115	1.020 / 1.013	1.020 / 1.013	1.020 / 1.013	1.020 / 1.013	1.020 / 1.013
27	Drayton 230/Groton 345	1.016 / 1.007	1.016 / 1.007	1.016 / 1.007	1.016 / 1.007	1.016 / 1.007
28	**SS OS Relay Margins**					
29	D602F at Forbes/Dorsey	211% / 328%	211% / 328%	211% / 328%	211% / 328%	211% / 328%
30	82R at Rugby/L20D at Drayton	999% / 804%	999% / 804%	999% / 804%	999% / 804%	999% / 804%
31	R50M/F3M	797% / 323%	797% / 323%	797% / 323%	797% / 323%	797% / 323%
32	B10T	330%	330%	330%	330%	330%
33	**Min/MaxTransientVltg**					
34	Arrowhd 230	0.94 | 1.02	0.98 | 1.02	0.95 | 1.02	0.96 | 1.02	0.93 | 1.03
35	Boise 115	0.99 | 1.06	1.00 | 1.03	1.00 | 1.04	1.00 | 1.04	0.99 | 1.06
36	Dorsey 230	1.02 | 1.07	1.03 | 1.05	1.02 | 1.06	1.03 | 1.06	1.01 | 1.07
37	Forbes 230	0.97 | 1.04	0.99 | 1.02	0.98 | 1.03	0.98 | 1.03	0.97 | 1.02
38	Riverton 230	0.90 | 1.06	0.99 | 1.04	0.93 | 1.05	0.95 | 1.05	0.88 | 1.06
39	Coal Creek 230	1.01 | 1.10	0.96 | 1.10	0.93 | 1.13	0.94 | 1.13	1.01 | 1.09
40	Jamestown 345	0.70 | 1.03	0.92 | 1.03	0.71 | 1.03	0.76 | 1.02	(0.66)0.64 | 1.06
41	Drayton 230	0.97 | 1.12	0.98 | 1.06	0.99 | 1.14	1.00 | 1.11	0.94 | 1.12
42	Groton 345	0.80 | 1.12	0.91 | 1.02	0.86 | 1.08	0.89 | 1.06	(0.82)0.69 | 1.12
43	Minong 161	0.98 | 1.05	1.01 | 1.04	0.98 | 1.05	0.99 | 1.05	0.97 | 1.06
44	Wahpeton 115	0.81 | 1.09	0.95 | 1.04	0.86 | 1.08	0.90 | 1.07	(0.72)0.75 | 1.11
45	Watertown 345	0.87 | 1.10	0.97 | 1.03	0.92 | 1.07	0.94 | 1.05	0.79 | 1.11
46	**Dynamic Voltage Warnings**					
47		none	none		none	63369 [JAMESTN3] 0.65
48						63198 [BUFFALOY] 0.66
49						63358 [BUFFALO3] 0.66
50						63199 [JAMSTN1Y] 0.68
51						63200 [JAMSTN2Y] 0.68
52						63258 [BUFFALO7] 0.68
53						3259 [ALICE 7] 0.68 +mo
54	Worst Case Angle Damping					
55	Dorsey SUVP / UdHold	/ 0.150		/ 0.175	/ 0.175	/ 0.150
56	Forbes DC Red (DCAR)	292%	411%	377%	398%	223%
57	K22W (max +dP @ t, d-ang)	23.2@(2.81665,-0.1)	12.3@(2.54165,-2.5)	22.1@(2.61665,-2.1)	16.6@(2.56665,-1.2)	41.5@(3.10831,-3.9)
58	K22W (max -dP @ t, d-ang)	29.3@(0.88333,5.3)	10.4@(0.82500,2.5)	25.2@(0.73333,4.7)	21.1@(0.70000,3.6)	44.3@(1.17500,13.4)
59	K22W (max d-ang @ t, dP)	10.0@(1.25833,-13.6)	3.5@(1.09166,-6.0)	8.6@(1.09166,-11.5)	6.9@(1.05000,-9.1)	19.1@(1.49166,-29.0)
60	**OS Rel Trip / Marg**					
61	MH - OH					
62	D602F at Forbes/Dorsey	155% / 237%	175% / 269%	159% / 243%	168% / 258%	142% / 214%
63	82R at Rugby/L20D at Drayton	999% / 498%	999% / 574%	999% / 574%	999% / 625%	999% / 363%
64	R50M / F3M	609% / 252%	686% / 281%	624% / 263%	634% / 267%	600% / 248%
65	B10T	103%	281%	133%	-362%	45%
66	**FSCAPS (SS/Unav/Final)**					
67	Balta 230	(0 | 3 | 0)	(0 | 1 | 0)	(0 | 3 | 0)	(0 | 2 | 0)	(0 | 2 | 0)
68	Eau Cl 345 / Park Lk 115	(3 | 3 | 3) / (0 | 0 | 0)	(3 | 3 | 3) / (0 | 0 | 0)	(3 | 3 | 3) / (0 | 0 | 0)	(3 | 3 | 3) / (0 | 0 | 0)	(3 | 3 | 3) / (0 | 0 | 0)
69	Prairie 115 / Ramsey 230	(1 |10 | 2) / (0 | 2 | 0)	(1 | 4 | 3) / (0 | 2 | 2)	(1 | 6 | 1) / (0 | 2 | 0)	(1 | 4 | 1) / (0 | 2 | 1)	(1 |12 | 2) / (0 | 2 | 0)
70	Roseau 230 / Running 230	(0 | 1 | 1) / (1 | 2 | 1)	(0 | 0 | 0) / (1 | 1 | 1)	(0 | 0 | 0) / (1 | 1 | 1)	(0 | 0 | 0) / (1 | 1 | 1)	(0 | 1 | 0) / (1 | 2 | 1)
71	Shey 115 / Split Rock 115	(2 | 5 | 2) / (1 | 2 | 2)	(2 | 4 | 4) / (1 | 1 | 1)	(2 | 5 | 4) / (1 | 2 | 2)	(2 | 5 | 4) / (1 | 1 | 1)	(2 | 5 | 1) / (1 | 2 | 2)
72	**Damping Performance**	N/A	N/A	N/A	N/A	N/A

Appendix E.1: Simulation Summary Tables for Baseline Analysis (Case b02)

1	**Case No.**	11	12	13	14	15
2	**Case Name**	b02-so11aa-ef9	b02-so11aa-ei2	b02-so11aa-el3	b02-so11aa-eq1	b02-so11aa-evs
3	**Disturbance**	ef9	ei2	el3	eq1	evs
4	**Prior Outage**	None	None	None	None	None
5	**Date/Time**	OCT 28 2008 15:10	OCT 28 2008 15:14	OCT 28 2008 15:12	OCT 28 2008 15:42	OCT 28 2008 15:15
6	**Comments**					
7						
8	**Steady State Flows**					
9	NDEX / EAST BIAS	2080 / 345	2080 / 345	2080 / 345	2080 / 345	2080 / 345
10	MHEX / L20D	2171 / 249	2171 / 249	2171 / 249	2171 / 249	2171 / 249
11	ECL-ARP / PRI-BYN	551 / 689	551 / 689	551 / 689	551 / 689	551 / 689
12	MWEX / AHD-SLK	1528 / 667	1528 / 667	1528 / 667	1528 / 667	1528 / 667
13	D602F / F601C	1790 / 1544	1790 / 1544	1790 / 1544	1790 / 1544	1790 / 1544
14	B10T / MH>SPC	165 / 61	165 / 61	165 / 61	165 / 61	165 / 61
15	OH E-W / OH>MH	190 / -196	190 / -196	190 / -196	190 / -196	190 / -196
16	R50M / OH>MP	156 / 150	156 / 150	156 / 150	156 / 150	156 / 150
17	G82R	-25	-25	-25	-25	-25
18	Dorsey bipole / CU bipole	3241 / 1104	3241 / 1104	3241 / 1104	3241 / 1104	3241 / 1104
19	Dorsey Reserve / Wtrtn SVC	196 / 36	196 / 36	196 / 36	196 / 36	196 / 36
20	Forbes SVC / MSC	-3 / 600	-3 / 600	-3 / 600	-3 / 600	-3 / 600
21	RCDC	0	0	0	0	0
22	**Steady State Vltgs**					
23	Dorsey 500/Dorsey 230	1.000 / 1.045	1.000 / 1.045	1.000 / 1.045	1.000 / 1.045	1.000 / 1.045
24	Roseau 500/Forbes 500	1.014 / 0.995	1.014 / 0.995	1.014 / 0.995	1.014 / 0.995	1.014 / 0.995
25	Chisago 500/EauClaire 345	1.004 / 1.004	1.004 / 1.004	1.004 / 1.004	1.004 / 1.004	1.004 / 1.004
26	Int Falls 115/Badoura 115	1.020 / 1.013	1.020 / 1.013	1.020 / 1.013	1.020 / 1.013	1.020 / 1.013
27	Drayton 230/Groton 345	1.016 / 1.007	1.016 / 1.007	1.016 / 1.007	1.016 / 1.007	1.016 / 1.007
28	**SS OS Relay Margins**					
29	D602F at Forbes/Dorsey	211% / 328%	211% / 328%	211% / 328%	211% / 328%	211% / 328%
30	82R at Rugby/L20D at Drayton	999% / 804%	999% / 804%	999% / 804%	999% / 804%	999% / 804%
31	R50M/F3M	797% / 323%	797% / 323%	797% / 323%	797% / 323%	797% / 323%
32	B10T	330%	330%	330%	330%	330%
33	**Min/MaxTransientVltg**					
34	Arrowhd 230	0.94 | 1.02	0.93 | 1.04	0.95 | 1.02	0.96 | 1.03	0.99 | 1.04
35	Boise 115	0.99 | 1.06	0.97 | 1.05	1.00 | 1.04	0.99 | 1.04	0.99 | 1.04
36	Dorsey 230	1.02 | 1.07	1.01 | 1.07	1.02 | 1.06	1.03 | 1.06	1.02 | 1.06
37	Forbes 230	0.98 | 1.03	0.94 | 1.02	0.98 | 1.03	0.97 | 1.02	0.98 | 1.03
38	Riverton 230	0.91 | 1.06	0.87 | 1.06	0.94 | 1.05	0.92 | 1.05	0.91 | 1.04
39	Coal Creek 230	1.01 | 1.09	1.00 | 1.12	0.94 | 1.13	0.98 | 1.16	0.94 | 1.12
40	Jamestown 345	0.71 | 1.04	0.76 | 1.04	0.76 | 1.03	0.79 | 1.02	0.73 | 0.99
41	Drayton 230	0.96 | 1.12	0.93 | 1.11	1.00 | 1.12	1.00 | 1.09	0.98 | 1.12
42	Groton 345	0.78 | 1.10	0.79 | 1.10	0.87 | 1.07	0.84 | 1.09	0.80 | 1.05
43	Minong 161	0.98 | 1.05	0.99 | 1.07	0.99 | 1.05	1.01 | 1.06	1.01 | 1.06
44	Wahpeton 115	0.81 | 1.10	0.80 | 1.09	0.88 | 1.07	0.86 | 1.08	0.82 | 1.05
45	Watertown 345	0.85 | 1.09	0.85 | 1.09	0.92 | 1.06	0.90 | 1.08	0.87 | 1.05
46	**Dynamic Voltage Warnings**					
47				none	none	none
48						
49						
50						
51						
52						
53						
54	Worst Case Angle Damping					
55	Dorsey SUVP / UdHold	/ 0.150		/ 0.175		/ 0.166
56	Forbes DC Red (DCAR)	298%	507%	379%	507%	365%
57	K22W (max +dP @ t, d-ang)	28.0@(2.99998,-0.2)	70.1@(2.89998,-29.1)	22.1@(2.56665,-2.4)	40.5@(1.90000,-19.9)	23.3@(2.69165,-5.4)
58	K22W (max -dP @ t, d-ang)	28.1@(0.98333,6.5)	13.8@(0.62500,2.2)	22.1@(0.68333,3.7)	11.6@(0.70000,1.9)	31.7@(0.83333,5.8)
59	K22W (max d-ang @ t, dP)	11.5@(1.33333,-13.1)	-34.4@(2.34999,60.8)	7.4@(1.05000,-10.3)	-21.2@(2.00000,40.3)	9.8@(1.19166,-22.4)
60	**OS Rel Trip / Marg**					
61	MH - OH					
62	D602F at Forbes/Dorsey	157% / 240%	105% / 155%	165% / 253%	145% / 220%	139% / 210%
63	82R at Rugby/L20D at Drayton	999% / 455%	999% / 459%	999% / 609%	999% / 516%	999% / 601%
64	R50M / F3M	638% / 256%	544% / 201%	625% / 265%	624% / 242%	589% / 254%
65	B10T	99%	73%	151%	105%	168%
66	**FSCAPS (SS/Unav/Final)**					
67	Balta 230	(0 | 1 | 0)	(0 | 2 | 0)	(0 | 2 | 0)	(0 | 2 | 0)	(0 | 3 | 0)
68	Eau Cl 345 / Park Lk 115	(3 | 3 | 3) / (0 | 0 | 0)	(3 | 3 | 2) / (0 | 0 | 0)	(3 | 3 | 3) / (0 | 0 | 0)	(3 | 3 | 3) / (0 | 0 | 0)	(3 | 3 | 3) / (0 | 0 | 0)
69	Prairie 115 / Ramsey 230	(1 |10 | 2) / (0 | 2 | 1)	(1 | 8 | 1) / (0 | 2 | 1)	(1 | 5 | 1) / (0 | 2 | 1)	(1 | 5 | 1) / (0 | 1 | 1)	(1 | 6 | 2) / (0 | 2 | 1)
70	Roseau 230 / Running 230	(0 | 1 | 0) / (1 | 2 | 1)	(0 | 1 | 0) / (1 | 3 | 2)	(0 | 0 | 0) / (1 | 1 | 1)	(0 | 1 | 1) / (1 | 2 | 2)	(0 | 0 | 0) / (1 | 2 | 2)
71	Shey 115 / Split Rock 115	(2 | 5 | 2) / (1 | 2 | 2)	(2 | 5 | 2) / (1 | 2 | 2)	(2 | 5 | 3) / (1 | 2 | 2)	(2 | 5 | 3) / (1 | 2 | 2)	(2 | 5 | 5) / (1 | 2 | 2)
72	**Damping Performance**	N/A	N/A	N/A	N/A	N/A

Appendix E.1: Simulation Summary Tables for Baseline Analysis (Case b02)

1	**Case No.**	16	17	18	19	20
2	**Case Name**	b02-so11aa-fd1	b02-so11aa-fd3	b02-so11aa-fd4	b02-so11aa-fdk	b02-so11aa-fdl
3	**Disturbance**	fd1	fd3	fd4	fdk	fdl
4	**Prior Outage**	None	None	None	None	None
5	**Date/Time**	OCT 28 2008 15:43	OCT 28 2008 15:17	OCT 28 2008 15:46	OCT 28 2008 15:44	OCT 28 2008 15:47
6	**Comments**					
7						
8	**Steady State Flows**					
9	NDEX / EAST BIAS	2080 / 345	2080 / 345	2080 / 345	2080 / 345	2080 / 345
10	MHEX / L20D	2171 / 249	2171 / 249	2171 / 249	2171 / 249	2171 / 249
11	ECL-ARP / PRI-BYN	551 / 689	551 / 689	551 / 689	551 / 689	551 / 689
12	MWEX / AHD-SLK	1528 / 667	1528 / 667	1528 / 667	1528 / 667	1528 / 667
13	D602F / F601C	1790 / 1544	1790 / 1544	1790 / 1544	1790 / 1544	1790 / 1544
14	B10T / MH>SPC	165 / 61	165 / 61	165 / 61	165 / 61	165 / 61
15	OH E-W / OH>MH	190 / -196	190 / -196	190 / -196	190 / -196	190 / -196
16	R50M / OH>MP	156 / 150	156 / 150	156 / 150	156 / 150	156 / 150
17	G82R	-25	-25	-25	-25	-25
18	Dorsey bipole / CU bipole	3241 / 1104	3241 / 1104	3241 / 1104	3241 / 1104	3241 / 1104
19	Dorsey Reserve / Wtrtn SVC	196 / 36	196 / 36	196 / 36	196 / 36	196 / 36
20	Forbes SVC / MSC	-3 / 600	-3 / 600	-3 / 600	-3 / 600	-3 / 600
21	RCDC	0	0	0	0	0
22	**Steady State Vltgs**					
23	Dorsey 500/Dorsey 230	1.000 / 1.045	1.000 / 1.045	1.000 / 1.045	1.000 / 1.045	1.000 / 1.045
24	Roseau 500/Forbes 500	1.014 / 0.995	1.014 / 0.995	1.014 / 0.995	1.014 / 0.995	1.014 / 0.995
25	Chisago 500/EauClaire 345	1.004 / 1.004	1.004 / 1.004	1.004 / 1.004	1.004 / 1.004	1.004 / 1.004
26	Int Falls 115/Badoura 115	1.020 / 1.013	1.020 / 1.013	1.020 / 1.013	1.020 / 1.013	1.020 / 1.013
27	Drayton 230/Groton 345	1.016 / 1.007	1.016 / 1.007	1.016 / 1.007	1.016 / 1.007	1.016 / 1.007
28	**SS OS Relay Margins**					
29	D602F at Forbes/Dorsey	211% / 328%	211% / 328%	211% / 328%	211% / 328%	211% / 328%
30	82R at Rugby/L20D at Drayton	999% / 804%	999% / 804%	999% / 804%	999% / 804%	999% / 804%
31	R50M/F3M	797% / 323%	797% / 323%	797% / 323%	797% / 323%	797% / 323%
32	B10T	330%	330%	330%	330%	330%
33	**Min/MaxTransientVltg**					
34	Arrowhd 230	0.98 | 1.04	0.93 | 1.02	0.94 | 1.02	1.01 | 1.05	0.96 | 1.03
35	Boise 115	0.98 | 1.04	0.99 | 1.06	0.99 | 1.05	1.00 | 1.03	1.00 | 1.03
36	Dorsey 230	1.02 | 1.06	1.01 | 1.06	1.02 | 1.06	1.03 | 1.06	1.03 | 1.06
37	Forbes 230	0.98 | 1.03	0.97 | 1.03	0.97 | 1.04	0.99 | 1.02	0.99 | 1.02
38	Riverton 230	0.92 | 1.07	0.90 | 1.07	0.92 | 1.07	0.98 | 1.06	0.97 | 1.06
39	Coal Creek 230	0.97 | 1.14	0.96 | 1.15	0.96 | 1.14	0.99 | 1.10	0.98 | 1.11
40	Jamestown 345	(0.52)0.68 | 1.04	(0.48)0.66 | 1.06	(0.49)0.67 | 1.07	0.83 | 1.05	0.80 | 1.07
41	Drayton 230	0.97 | 1.12	0.97 | 1.12	0.97 | 1.12	1.01 | 1.07	0.99 | 1.10
42	Groton 345	0.85 | 1.08	0.82 | 1.10	0.86 | 1.09	0.94 | 1.08	0.93 | 1.08
43	Minong 161	1.01 | 1.06	0.97 | 1.04	0.98 | 1.05	1.04 | 1.08	1.00 | 1.06
44	Wahpeton 115	0.83 | 1.09	0.80 | 1.10	0.84 | 1.10	0.94 | 1.09	0.93 | 1.10
45	Watertown 345	0.90 | 1.07	0.88 | 1.08	0.91 | 1.08	0.98 | 1.06	0.97 | 1.07
46	**Dynamic Voltage Warnings**					
47		63369 [JAMESTN3] 0.68	63369 [JAMESTN3] 0.66	63369 [JAMESTN3] 0.67	none	none
48			63358 [BUFFALO3] 0.67	63199 [JAMSTN1Y] 0.69		
49			63199 [JAMSTN1Y] 0.68	63200 [JAMSTN2Y] 0.69		
50			63200 [JAMSTN2Y] 0.68			
51			63198 [BUFFALOY] 0.68			
52			63258 [BUFFALO7] 0.69			
53			3259 [ALICE 7] 0.69 +mo			
54	Worst Case Angle Damping					
55	Dorsey SUVP / UdHold		/ 0.166			
56	Forbes DC Red (DCAR)	326%	308%	318%	487%	480%
57	K22W (max +dP @ t, d-ang)	3.7@(0.13333,-0.2)	29.0@(2.72499,-2.8)	3.7@(0.13333,-0.2)	36.1@(2.00000,-17.2)	36.3@(2.00000,-16.4)
58	K22W (max -dP @ t, d-ang)	25.9@(0.91666,5.1)	27.6@(0.93333,8.9)	23.4@(0.85833,5.0)	3.4@(0.31667,-0.2)	3.5@(0.32500,-0.2)
59	K22W (max d-ang @ t, dP)	8.5@(1.23333,-12.0)	11.5@(1.18333,-17.2)	8.7@(1.17500,-9.9)	-17.2@(2.00000,36.1)	-16.4@(1.97500,35.5)
60	**OS Rel Trip / Marg**					
61	MH - OH					
62	D602F at Forbes/Dorsey	144% / 217%	149% / 227%	158% / 241%	175% / 270%	175% / 269%
63	82R at Rugby/L20D at Drayton	999% / 587%	999% / 501%	999% / 535%	999% / 557%	999% / 496%
64	R50M / F3M	602% / 251%	623% / 263%	637% / 265%	647% / 245%	645% / 253%
65	B10T	145%	107%	122%	139%	113%
66	**FSCAPS (SS/Unav/Final)**					
67	Balta 230	(0 | 0 | 0)	(0 | 2 | 0)	(0 | 1 | 0)	(0 | 0 | 0)	(0 | 0 | 0)
68	Eau Cl 345 / Park Lk 115	(3 | 3 | 3) / (0 | 0 | 0)	(3 | 3 | 3) / (0 | 0 | 0)	(3 | 3 | 3) / (0 | 0 | 0)	(3 | 3 | 3) / (0 | 0 | 0)	(3 | 3 | 3) / (0 | 0 | 0)
69	Prairie 115 / Ramsey 230	(1 | 7 | 2) / (0 | 2 | 1)	(1 | 9 | 2) / (0 | 2 | 1)	(1 | 8 | 2) / (0 | 1 | 0)	(1 | 3 | 2) / (0 | 1 | 1)	(1 | 5 | 1) / (0 | 1 | 1)
70	Roseau 230 / Running 230	(0 | 1 | 1) / (1 | 2 | 2)	(0 | 1 | 1) / (1 | 2 | 1)	(0 | 1 | 1) / (1 | 2 | 2)	(0 | 0 | 0) / (1 | 1 | 1)	(0 | 0 | 0) / (1 | 1 | 1)
71	Shey 115 / Split Rock 115	(2 | 5 | 2) / (1 | 2 | 2)	(2 | 5 | 1) / (1 | 2 | 2)	(2 | 5 | 1) / (1 | 2 | 2)	(2 | 5 | 2) / (1 | 1 | 1)	(2 | 5 | 1) / (1 | 1 | 1)
72	**Damping Performance**	N/A	N/A	N/A	N/A	N/A

Appendix E.1: Simulation Summary Tables for Baseline Analysis (Case b02)

1	**Case No.**	21	22	23	24	25
2	**Case Name**	b02-so11aa-fds	b02-so11aa-nmz	b02-so11aa-pcs	b02-so11aa-pct	b02-so11aa-pys
3	**Disturbance**	fds	nmz	pcs	pct	pys
4	**Prior Outage**	None	None	None	None	None
5	**Date/Time**	OCT 28 2008 15:19	OCT 28 2008 14:48	OCT 28 2008 15:26	OCT 28 2008 15:30	OCT 28 2008 15:33
6	**Comments**					
7						
8	**Steady State Flows**					
9	NDEX / EAST BIAS	2080 / 345	2080 / 345	2080 / 345	2080 / 345	2080 / 345
10	MHEX / L20D	2171 / 249	2171 / 249	2171 / 249	2171 / 249	2171 / 249
11	ECL-ARP / PRI-BYN	551 / 689	551 / 689	551 / 689	551 / 689	551 / 689
12	MWEX / AHD-SLK	1528 / 667	1528 / 667	1528 / 667	1528 / 667	1528 / 667
13	D602F / F601C	1790 / 1544	1790 / 1544	1790 / 1544	1790 / 1544	1790 / 1544
14	B10T / MH>SPC	165 / 61	165 / 61	165 / 61	165 / 61	165 / 61
15	OH E-W / OH>MH	190 / -196	190 / -196	190 / -196	190 / -196	190 / -196
16	R50M / OH>MP	156 / 150	156 / 150	156 / 150	156 / 150	156 / 150
17	G82R	-25	-25	-25	-25	-25
18	Dorsey bipole / CU bipole	3241 / 1104	3241 / 1104	3241 / 1104	3241 / 1104	3241 / 1104
19	Dorsey Reserve / Wtrtn SVC	196 / 36	196 / 36	196 / 36	196 / 36	196 / 36
20	Forbes SVC / MSC	-3 / 600	-3 / 600	-3 / 600	-3 / 600	-3 / 600
21	RCDC	0	0	0	0	0
22	**Steady State Vltgs**					
23	Dorsey 500/Dorsey 230	1.000 / 1.045	1.000 / 1.045	1.000 / 1.045	1.000 / 1.045	1.000 / 1.045
24	Roseau 500/Forbes 500	1.014 / 0.995	1.014 / 0.995	1.014 / 0.995	1.014 / 0.995	1.014 / 0.995
25	Chisago 500/EauClaire 345	1.004 / 1.004	1.004 / 1.004	1.004 / 1.004	1.004 / 1.004	1.004 / 1.004
26	Int Falls 115/Badoura 115	1.020 / 1.013	1.020 / 1.013	1.020 / 1.013	1.020 / 1.013	1.020 / 1.013
27	Drayton 230/Groton 345	1.016 / 1.007	1.016 / 1.007	1.016 / 1.007	1.016 / 1.007	1.016 / 1.007
28	**SS OS Relay Margins**					
29	D602F at Forbes/Dorsey	211% / 328%	211% / 328%	211% / 328%	211% / 328%	211% / 328%
30	82R at Rugby/L20D at Drayton	999% / 804%	999% / 804%	999% / 804%	999% / 804%	999% / 804%
31	R50M/F3M	797% / 323%	797% / 323%	797% / 323%	797% / 323%	797% / 323%
32	B10T	330%	330%	330%	330%	330%
33	**Min/MaxTransientVltg**					
34	Arrowhd 230	0.94 | 1.02	0.93 | 1.06	0.84 | 0.97	0.93 | 0.95	0.97 | 1.01
35	Boise 115	1.00 | 1.04	0.93 | 1.04	0.99 | 1.07	1.02 | 1.03	0.99 | 1.05
36	Dorsey 230	1.02 | 1.06	1.04 | 1.17	1.02 | 1.10	1.04 | 1.05	1.02 | 1.07
37	Forbes 230	0.98 | 1.03	0.98 | 1.03	0.98 | 1.04	0.99 | 1.01	0.99 | 1.05
38	Riverton 230	0.93 | 1.06	0.88 | 1.05	0.98 | 1.03	1.00 | 1.02	1.01 | 1.03
39	Coal Creek 230	0.96 | 1.13	0.94 | 1.10	0.96 | 1.07	1.02 | 1.05	0.99 | 1.08
40	Jamestown 345	0.73 | 1.04	0.79 | 1.01	0.90 | 1.00	0.95 | 0.97	0.91 | 0.98
41	Drayton 230	0.98 | 1.12	0.97 | 1.09	1.01 | 1.06	1.01 | 1.03	1.01 | 1.05
42	Groton 345	0.86 | 1.08	0.83 | 1.06	0.95 | 1.03	1.00 | 1.02	0.96 | 1.02
43	Minong 161	0.98 | 1.05	0.99 | 1.09	0.83 | 0.99	0.94 | 0.97	0.97 | 1.03
44	Wahpeton 115	0.85 | 1.09	0.82 | 1.06	0.97 | 1.05	1.01 | 1.02	0.99 | 1.04
45	Watertown 345	0.91 | 1.07	0.87 | 1.05	0.98 | 1.03	1.01 | 1.02	0.99 | 1.03
46	**Dynamic Voltage Warnings**					
47		none	none	none	none	none
48						
49						
50						
51						
52						
53						
54	Worst Case Angle Damping			SHERC3 / 71.58%	SHERC3 / 59.02%	SHERC3 / 78.42%
55	Dorsey SUVP / UdHold	/ 0.166	/ 0.133			
56	Forbes DC Red (DCAR)	352%	507%	91%	300%	156%
57	K22W (max +dP @ t, d-ang)	21.9@(2.65832,-2.4)	132.6@(2.68332,-56.6)	7.8@(3.53331,1.6)	0.0@(0.10000,0.0)	13.3@(2.53332,-0.2)
58	K22W (max -dP @ t, d-ang)	20.5@(0.75833,4.5)	88.8@(0.23333,7.0)	51.6@(1.70833,16.9)	32.5@(2.14166,13.1)	30.7@(1.70000,7.5)
59	K22W (max d-ang @ t, dP)	8.4@(1.10833,-13.2)	-58.5@(2.42499,124.3)	25.4@(1.12500,-48.5)	13.1@(2.14166,-32.5)	17.5@(1.07500,-28.2)
60	**OS Rel Trip / Marg**					
61	MH - OH					
62	D602F at Forbes/Dorsey	162% / 249%	0.18333 sec / 0.18333 sec	158% / 240%	211% / 328%	153% / 232%
63	82R at Rugby/L20D at Drayton	999% / 562%	999% / 519%	999% / 539%	999% / 722%	999% / 599%
64	R50M / F3M	629% / 265%	346% / 148%	559% / 323%	733% / 323%	599% / 297%
65	B10T	141%	126%	147%	280%	171%
66	**FSCAPS (SS/Unav/Final)**					
67	Balta 230	(0 | 1 | 0)	(0 | 2 | 0)	(0 | 0 | 0)	(0 | 0 | 0)	(0 | 0 | 0)
68	Eau Cl 345 / Park Lk 115	(3 | 3 | 3) / (0 | 0 | 0)	(3 | 3 | 1) / (0 | 0 | 0)	(3 | 4 | 3) / (0 | 3 | 3)	(3 | 3 | 3) / (0 | 0 | 0)	(3 | 4 | 4) / (0 | 3 | 3)
69	Prairie 115 / Ramsey 230	(1 | 7 | 2) / (0 | 2 | 1)	(1 | 5 | 1) / (0 | 1 | 1)	(1 | 3 | 2) / (0 | 1 | 1)	(1 | 1 | 1) / (0 | 0 | 0)	(1 | 2 | 2) / (0 | 1 | 1)
70	Roseau 230 / Running 230	(0 | 0 | 0) / (1 | 1 | 1)	(0 | 1 | 0) / (1 | 4 | 2)	(0 | 1 | 1) / (1 | 2 | 1)	(0 | 0 | 0) / (1 | 1 | 1)	(0 | 1 | 1) / (1 | 1 | 1)
71	Shey 115 / Split Rock 115	(2 | 5 | 2) / (1 | 2 | 2)	(2 | 5 | 4) / (1 | 2 | 2)	(2 | 4 | 4) / (1 | 1 | 1)	(2 | 2 | 2) / (1 | 1 | 1)	(2 | 3 | 3) / (1 | 1 | 1)
72	**Damping Performance**	N/A	N/A	N/A	N/A	N/A

Appendix E.1: Simulation Summary Tables for Baseline Analysis (Case b02)

1	**Case No.**	26	27	28
2	**Case Name**	b02-so11aa-pyt	b02-so11aa-ya3	b02-so11aa-yas
3	**Disturbance**	pyt	ya3	yas
4	**Prior Outage**	None	None	None
5	**Date/Time**	OCT 28 2008 15:37	OCT 28 2008 15:21	OCT 28 2008 15:49
6	**Comments**			
7				
8	**Steady State Flows**			
9	NDEX / EAST BIAS	2080 / 345	2080 / 345	2080 / 345
10	MHEX / L20D	2171 / 249	2171 / 249	2171 / 249
11	ECL-ARP / PRI-BYN	551 / 689	551 / 689	551 / 689
12	MWEX / AHD-SLK	1528 / 667	1528 / 667	1528 / 667
13	D602F / F601C	1790 / 1544	1790 / 1544	1790 / 1544
14	B10T / MH>SPC	165 / 61	165 / 61	165 / 61
15	OH E-W / OH>MH	190 / -196	190 / -196	190 / -196
16	R50M / OH>MP	156 / 150	156 / 150	156 / 150
17	G82R	-25	-25	-25
18	Dorsey bipole / CU bipole	3241 / 1104	3241 / 1104	3241 / 1104
19	Dorsey Reserve / Wtrtn SVC	196 / 36	196 / 36	196 / 36
20	Forbes SVC / MSC	-3 / 600	-3 / 600	-3 / 600
21	RCDC	0	0	0
22	**Steady State Vltgs**			
23	Dorsey 500/Dorsey 230	1.000 / 1.045	1.000 / 1.045	1.000 / 1.045
24	Roseau 500/Forbes 500	1.014 / 0.995	1.014 / 0.995	1.014 / 0.995
25	Chisago 500/EauClaire 345	1.004 / 1.004	1.004 / 1.004	1.004 / 1.004
26	Int Falls 115/Badoura 115	1.020 / 1.013	1.020 / 1.013	1.020 / 1.013
27	Drayton 230/Groton 345	1.016 / 1.007	1.016 / 1.007	1.016 / 1.007
28	**SS OS Relay Margins**			
29	D602F at Forbes/Dorsey	211% / 328%	211% / 328%	211% / 328%
30	82R at Rugby/L20D at Drayton	999% / 804%	999% / 804%	999% / 804%
31	R50M/F3M	797% / 323%	797% / 323%	797% / 323%
32	B10T	330%	330%	330%
33	**Min/MaxTransientVltg**			
34	Arrowhd 230	0.98 | 1.00	0.99 | 1.01	0.92 | 0.99
35	Boise 115	1.02 | 1.03	1.02 | 1.04	1.03 | 1.06
36	Dorsey 230	1.04 | 1.05	1.04 | 1.05	1.04 | 1.07
37	Forbes 230	1.00 | 1.02	1.00 | 1.01	0.99 | 1.02
38	Riverton 230	1.01 | 1.03	1.00 | 1.01	0.97 | 1.03
39	Coal Creek 230	1.02 | 1.05	1.02 | 1.05	0.99 | 1.06
40	Jamestown 345	0.96 | 0.97	0.95 | 0.97	0.93 | 0.98
41	Drayton 230	1.01 | 1.03	1.01 | 1.03	1.00 | 1.03
42	Groton 345	1.00 | 1.01	0.99 | 1.01	0.99 | 1.01
43	Minong 161	1.00 | 1.02	0.98 | 1.01	1.03 | 1.11
44	Wahpeton 115	1.01 | 1.03	1.01 | 1.03	1.00 | 1.03
45	Watertown 345	1.01 | 1.02	1.01 | 1.02	1.01 | 1.02
46	**Dynamic Voltage Warnings**			
47		none	none	39449] 1.29
48				
49				
50				
51				
52				
53				
54	Worst Case Angle Damping	SHERC3 / 62.03%		
55	Dorsey SUVP / UdHold			
56	Forbes DC Red (DCAR)	359%	401%	395%
57	K22W (max +dP @ t, d-ang)	0.0@(0.10000,0.0)	4.1@(0.11667,0.8)	2.6@(0.11667,0.4)
58	K22W (max -dP @ t, d-ang)	20.4@(1.82500,7.7)	25.1@(1.70000,10.9)	23.8@(1.25000,9.1)
59	K22W (max d-ang @ t, dP)	8.2@(2.20833,-18.8)	11.0@(1.96666,-22.4)	9.2@(1.07500,-21.4)
60	**OS Rel Trip / Marg**			
61	MH - OH			
62	D602F at Forbes/Dorsey	211% / 328%	208% / 325%	191% / 296%
63	82R at Rugby/L20D at Drayton	999% / 740%	999% / 698%	999% / 690%
64	R50M / F3M	777% / 323%	797% / 323%	757% / 323%
65	B10T	286%	265%	250%
66	**FSCAPS (SS/Unav/Final)**			
67	Balta 230	(0 | 0 | 0)	(0 | 0 | 0)	(0 | 0 | 0)
68	Eau Cl 345 / Park Lk 115	(3 | 3 | 3) / (0 | 0 | 0)	(3 | 4 | 4) / (0 | 0 | 0)	(3 | 4 | 4) / (0 | 0 | 0)
69	Prairie 115 / Ramsey 230	(1 | 1 | 1) / (0 | 0 | 0)	(1 | 1 | 1) / (0 | 0 | 0)	(1 | 1 | 1) / (0 | 0 | 0)
70	Roseau 230 / Running 230	(0 | 0 | 0) / (1 | 1 | 1)	(0 | 0 | 0) / (1 | 1 | 1)	(0 | 0 | 0) / (1 | 2 | 2)
71	Shey 115 / Split Rock 115	(2 | 2 | 2) / (1 | 1 | 1)	(2 | 2 | 2) / (1 | 1 | 1)	(2 | 3 | 3) / (1 | 1 | 1)
72	**Damping Performance**	N/A	N/A	N/A

Appendix E.2 - Simulation Summary Tables With GI-0616 and GI-0707A (Case b04)

1	**Case No.**	1	2	3	4	5
2	**Case Name**	b04-so11aa-zss	b04-so11aa-ac3	b04-so11aa-ad3	b04-so11aa-ag1	b04-so11aa-ag3
3	**Disturbance**	zss	ac3	ad3	ag1	ag3
4	**Prior Outage**	None	None	None	None	None
5	**Date/Time**	OCT 28 2008 13:50	OCT 28 2008 13:51	OCT 28 2008 13:53	OCT 28 2008 13:37	OCT 28 2008 13:55
6	**Comments**					
7						
8	**Steady State Flows**					
9	NDEX / EAST BIAS	2079 / 331	2079 / 331	2079 / 331	2079 / 331	2079 / 331
10	MHEX / L20D	2174 / 252	2174 / 252	2174 / 252	2174 / 252	2174 / 252
11	ECL-ARP / PRI-BYN	555 / 692	555 / 692	555 / 692	555 / 692	555 / 692
12	MWEX / AHD-SLK	1525 / 661	1525 / 661	1525 / 661	1525 / 661	1525 / 661
13	D602F / F601C	1798 / 1545	1798 / 1545	1798 / 1545	1798 / 1545	1798 / 1545
14	B10T / MH>SPC	166 / 62	166 / 62	166 / 62	166 / 62	166 / 62
15	OH E-W / OH>MH	189 / -196	189 / -196	189 / -196	189 / -196	189 / -196
16	R50M / OH>MP	158 / 150	158 / 150	158 / 150	158 / 150	158 / 150
17	G82R	-34	-34	-34	-34	-34
18	Dorsey bipole / CU bipole	3246 / 1104	3246 / 1104	3246 / 1104	3246 / 1104	3246 / 1104
19	Dorsey Reserve / Wtrtn SVC	178 / 110	178 / 110	178 / 110	178 / 110	178 / 110
20	Forbes SVC / MSC	4 / 600	4 / 600	4 / 600	4 / 600	4 / 600
21	RCDC	0	0	0	0	0
22	**Steady State Vltgs**					
23	Dorsey 500/Dorsey 230	1.000 / 1.045	1.000 / 1.045	1.000 / 1.045	1.000 / 1.045	1.000 / 1.045
24	Roseau 500/Forbes 500	1.017 / 0.993	1.017 / 0.993	1.017 / 0.993	1.017 / 0.993	1.017 / 0.993
25	Chisago 500/EauClaire 345	1.003 / 1.003	1.003 / 1.003	1.003 / 1.003	1.003 / 1.003	1.003 / 1.003
26	Int Falls 115/Badoura 115	1.019 / 1.013	1.019 / 1.013	1.019 / 1.013	1.019 / 1.013	1.019 / 1.013
27	Drayton 230/Groton 345	1.016 / 0.977	1.016 / 0.977	1.016 / 0.977	1.016 / 0.977	1.016 / 0.977
28	**SS OS Relay Margins**					
29	D602F at Forbes/Dorsey	208% / 323%	208% / 323%	208% / 323%	208% / 323%	208% / 323%
30	82R at Rugby/L20D at Drayton	999% / 793%	999% / 793%	999% / 793%	999% / 793%	999% / 793%
31	R50M/F3M	784% / 324%	784% / 324%	784% / 324%	784% / 324%	784% / 324%
32	B10T	327%	327%	327%	327%	327%
33	**Min/MaxTransientVltg**					
34	Arrowhd 230	0.99 | 0.99	0.95 | 1.00	0.96 | 1.01	0.95 | 1.00	0.95 | 1.00
35	Boise 115	1.02 | 1.02	0.98 | 1.05	0.99 | 1.03	0.99 | 1.04	0.99 | 1.04
36	Dorsey 230	1.04 | 1.04	1.02 | 1.05	1.02 | 1.06	1.02 | 1.06	1.02 | 1.06
37	Forbes 230	1.00 | 1.00	0.98 | 1.02	0.98 | 1.02	0.98 | 1.02	0.98 | 1.02
38	Riverton 230	1.01 | 1.01	0.94 | 1.03	0.97 | 1.05	0.95 | 1.03	0.95 | 1.03
39	Coal Creek 230	1.03 | 1.03	0.94 | 1.12	0.95 | 1.12	0.94 | 1.12	0.95 | 1.12
40	Jamestown 345	0.95 | 0.95	0.78 | 0.99	0.86 | 1.02	0.80 | 1.01	0.80 | 0.99
41	Drayton 230	1.02 | 1.02	0.96 | 1.10	0.99 | 1.10	0.96 | 1.11	0.96 | 1.11
42	Groton 345	0.98 | 0.98	0.71 | 0.98	0.75 | 1.02	(0.52)0.69 | 1.00	0.71 | 0.99
43	Minong 161	1.02 | 1.02	0.99 | 1.03	1.00 | 1.04	0.99 | 1.03	0.99 | 1.03
44	Wahpeton 115	1.01 | 1.01	0.86 | 1.04	0.92 | 1.07	0.87 | 1.05	0.87 | 1.04
45	Watertown 345	1.01 | 1.01	0.87 | 1.03	0.88 | 1.04	0.86 | 1.03	0.86 | 1.03
46	**Dynamic Voltage Warnings**					
47		none	67615 [GI-06193] 0.66	none	67615 [GI-06193] 0.65	67615 [GI-06193] 0.68
48					67160 [GROTON 3] 0.69	
49					67616 [GI-0616] 0.69	
50						
51						
52						
53						
54	Worst Case Angle Damping					
55	Dorsey SUVP / UdHold					
56	Forbes DC Red (DCAR)	505%	401%	372%	408%	406%
57	K22W (max +dP @ t, d-ang)	0.0@(0.20833,0.0)	18.2@(2.73332,-3.4)	20.2@(2.59165,-2.5)	2.3@(0.13333,-0.1)	17.6@(2.69999,-1.9)
58	K22W (max -dP @ t, d-ang)	0.6@(4.84162,0.3)	32.1@(0.94166,10.0)	18.8@(0.82500,5.3)	31.6@(0.95833,9.6)	31.7@(0.93333,10.2)
59	K22W (max d-ang @ t, dP)	0.3@(4.99995,-0.5)	12.7@(1.22500,-21.2)	7.3@(1.10000,-8.9)	12.3@(1.23333,-18.5)	12.6@(1.20000,-20.6)
60	**OS Rel Trip / Marg**					
61	MH - OH					
62	D602F at Forbes/Dorsey	208% / 323%	136% / 203%	160% / 244%	139% / 208%	139% / 208%
63	82R at Rugby/L20D at Drayton	999% / 792%	999% / 576%	999% / 588%	999% / 569%	999% / 579%
64	R50M / F3M	784% / 324%	572% / 266%	648% / 269%	581% / 264%	581% / 268%
65	B10T	327%	171%	156%	158%	165%
66	**FSCAPS (SS/Unav/Final)**					
67	Balta 230	(0 | 0 | 0)	(0 | 2 | 0)	(0 | 1 | 0)	(0 | 2 | 0)	(0 | 2 | 0)
68	Eau Cl 345 / Park Lk 115	(3 | 3 | 3) / (0 | 0 | 0)	(3 | 3 | 3) / (0 | 0 | 0)	(3 | 3 | 3) / (0 | 0 | 0)	(3 | 3 | 3) / (0 | 0 | 0)	(3 | 3 | 3) / (0 | 0 | 0)
69	Prairie 115 / Ramsey 230	(1 | 1 | 1) / (1 | 1 | 1)	(1 | 6 | 2) / (1 | 2 | 2)	(1 | 4 | 1) / (1 | 2 | 1)	(1 | 7 | 2) / (1 | 2 | 1)	(1 | 6 | 2) / (1 | 2 | 2)
70	Roseau 230 / Running 230	(0 | 0 | 0) / (1 | 1 | 1)	(0 | 1 | 1) / (1 | 2 | 2)	(0 | 0 | 0) / (1 | 1 | 1)	(0 | 1 | 1) / (1 | 2 | 2)	(0 | 1 | 1) / (1 | 1 | 1)
71	Shey 115 / Split Rock 115	(3 | 3 | 3) / (1 | 1 | 1)	(3 | 5 | 5) / (1 | 2 | 2)	(3 | 5 | 3) / (1 | 2 | 2)	(3 | 5 | 4) / (1 | 2 | 2)	(3 | 5 | 5) / (1 | 2 | 2)
72	**Damping Performance**	N/A	N/A	N/A	N/A	N/A

Appendix E.2 - Simulation Summary Tables With GI-0616 and GI-0707A (Case b04)

1	**Case No.**	6	7	8	9	10
2	**Case Name**	b04-so11aa-bl3	b04-so11aa-eb3	b04-so11aa-ec3	b04-so11aa-ecs	b04-so11aa-ef3
3	**Disturbance**	bl3	eb3	ec3	ecs	ef3
4	**Prior Outage**	None	None	None	None	None
5	**Date/Time**	OCT 28 2008 13:57	OCT 28 2008 13:59	OCT 28 2008 14:01	OCT 28 2008 14:03	OCT 28 2008 14:05
6	**Comments**					
7						
8	**Steady State Flows**					
9	NDEX / EAST BIAS	2079 / 331	2079 / 331	2079 / 331	2079 / 331	2079 / 331
10	MHEX / L20D	2174 / 252	2174 / 252	2174 / 252	2174 / 252	2174 / 252
11	ECL-ARP / PRI-BYN	555 / 692	555 / 692	555 / 692	555 / 692	555 / 692
12	MWEX / AHD-SLK	1525 / 661	1525 / 661	1525 / 661	1525 / 661	1525 / 661
13	D602F / F601C	1798 / 1545	1798 / 1545	1798 / 1545	1798 / 1545	1798 / 1545
14	B10T / MH>SPC	166 / 62	166 / 62	166 / 62	166 / 62	166 / 62
15	OH E-W / OH>MH	189 / -196	189 / -196	189 / -196	189 / -196	189 / -196
16	R50M / OH>MP	158 / 150	158 / 150	158 / 150	158 / 150	158 / 150
17	G82R	-34	-34	-34	-34	-34
18	Dorsey bipole / CU bipole	3246 / 1104	3246 / 1104	3246 / 1104	3246 / 1104	3246 / 1104
19	Dorsey Reserve / Wtrtn SVC	178 / 110	178 / 110	178 / 110	178 / 110	178 / 110
20	Forbes SVC / MSC	4 / 600	4 / 600	4 / 600	4 / 600	4 / 600
21	RCDC	0	0	0	0	0
22	**Steady State Vltgs**					
23	Dorsey 500/Dorsey 230	1.000 / 1.045	1.000 / 1.045	1.000 / 1.045	1.000 / 1.045	1.000 / 1.045
24	Roseau 500/Forbes 500	1.017 / 0.993	1.017 / 0.993	1.017 / 0.993	1.017 / 0.993	1.017 / 0.993
25	Chisago 500/EauClaire 345	1.003 / 1.003	1.003 / 1.003	1.003 / 1.003	1.003 / 1.003	1.003 / 1.003
26	Int Falls 115/Badoura 115	1.019 / 1.013	1.019 / 1.013	1.019 / 1.013	1.019 / 1.013	1.019 / 1.013
27	Drayton 230/Groton 345	1.016 / 0.977	1.016 / 0.977	1.016 / 0.977	1.016 / 0.977	1.016 / 0.977
28	**SS OS Relay Margins**					
29	D602F at Forbes/Dorsey	208% / 323%	208% / 323%	208% / 323%	208% / 323%	208% / 323%
30	82R at Rugby/L20D at Drayton	999% / 793%	999% / 793%	999% / 793%	999% / 793%	999% / 793%
31	R50M/F3M	784% / 324%	784% / 324%	784% / 324%	784% / 324%	784% / 324%
32	B10T	327%	327%	327%	327%	327%
33	**Min/MaxTransientVltg**					
34	Arrowhd 230	0.92 | 1.02	0.97 | 1.01	0.94 | 1.01	0.95 | 1.01	0.89 | 0.94
35	Boise 115	0.99 | 1.06	1.00 | 1.03	0.99 | 1.06	1.00 | 1.04	0.99 | 1.03
36	Dorsey 230	1.01 | 1.07	1.03 | 1.06	1.02 | 1.06	1.02 | 1.06	1.03 | 1.06
37	Forbes 230	0.97 | 1.02	0.99 | 1.02	0.98 | 1.03	0.98 | 1.02	0.97 | 0.98
38	Riverton 230	0.88 | 1.06	0.99 | 1.04	0.92 | 1.05	0.94 | 1.05	0.80 | 0.91
39	Coal Creek 230	1.01 | 1.09	0.96 | 1.10	0.93 | 1.13	0.94 | 1.12	1.01 | 1.04
40	Jamestown 345	(0.54)0.65 | 1.06	0.93 | 1.03	(0.48)0.68 | 1.00	0.73 | 1.00	(0.79)0.39 |
41	Drayton 230	0.94 | 1.10	0.98 | 1.07	0.96 | 1.14	0.98 | 1.13	(0.79)0.78 | 0.97
42	Groton 345	(0.84)0.59 | 1.07	0.86 | 0.98	0.80 | 1.03	0.84 | 1.03	(0.79)0.40 | 0.78
43	Minong 161	0.97 | 1.06	1.01 | 1.04	0.97 | 1.04	0.98 | 1.04	0.95 | 1.00
44	Wahpeton 115	(0.67)0.76 | 1.11	0.94 | 1.04	0.84 | 1.07	0.87 | 1.06	(0.79)0.54 |
45	Watertown 345	0.76 | 1.08	0.94 | 1.02	0.88 | 1.05	0.91 | 1.04	(0.79)0.62 | 0.86
46	**Dynamic Voltage Warnings**					
47		63369 [JAMESTN3] 0.66	none	63369 [JAMESTN3] 0.68		63198 [BUFFALOY] 0.62
48		63198 [BUFFALOY] 0.66		63358 [BUFFALO3] 0.69		63358 [BUFFALO3] 0.62
49		63358 [BUFFALO3] 0.66		63198 [BUFFALOY] 0.69		63369 [JAMESTN3] 0.62
50		63199 [JAMSTN1Y] 0.68				63258 [BUFFALO7] 0.63
51		63200 [JAMSTN2Y] 0.68				63259 [ALICE 7] 0.63
52		63258 [BUFFALO7] 0.68				66792 [MAPLE R3] 0.64
53		3259 [ALICE 7] 0.68 +mo				200 [JAMSTN2Y] 0.65 +m
54	Worst Case Angle Damping					
55	Dorsey SUVP / UdHold	/ 0.150		/ 0.166	/ 0.166	/ 0.150
56	Forbes DC Red (DCAR)	277%	411%	370%	388%	507%
57	K22W (max +dP @ t, d-ang)	37.6@(2.99998,-4.6)	11.9@(2.61665,-2.1)	27.0@(2.66665,-2.7)	18.8@(2.59999,-1.4)	11.7@(0.15000,-0.3)
58	K22W (max -dP @ t, d-ang)	46.7@(1.15833,14.0)	12.2@(0.86666,3.0)	28.2@(0.76666,5.9)	22.6@(0.70833,4.0)	16.3@(0.71666,0.7)
59	K22W (max d-ang @ t, dP)	18.4@(1.45833,-35.4)	4.3@(1.13333,-8.0)	10.4@(1.14166,-15.5)	7.9@(1.07500,-10.9)	-0.8@(0.43333,0.4)
60	**OS Rel Trip / Marg**					
61	MH - OH					
62	D602F at Forbes/Dorsey	150% / 228%	169% / 259%	151% / 230%	159% / 243%	158% / 241%
63	82R at Rugby/L20D at Drayton	999% / 375%	999% / 556%	999% / 555%	999% / 599%	999% / 384%
64	R50M / F3M	597% / 252%	667% / 280%	614% / 263%	624% / 267%	618% / 251%
65	B10T	51%	287%	129%	156%	327%
66	**FSCAPS (SS/Unav/Final)**					
67	Balta 230	(0 | 3 | 0)	(0 | 2 | 0)	(0 | 3 | 0)	(0 | 3 | 0)	(0 | 3 | 3)
68	Eau Cl 345 / Park Lk 115	(3 | 3 | 3) / (0 | 0 | 0)	(3 | 3 | 3) / (0 | 0 | 0)	(3 | 3 | 3) / (0 | 0 | 0)	(3 | 3 | 3) / (0 | 0 | 0)	(3 | 3 | 3) / (0 | 0 | 0)
69	Prairie 115 / Ramsey 230	(1 |12 | 1) / (1 | 2 | 1)	(1 | 5 | 4) / (1 | 2 | 2)	(1 | 7 | 2) / (1 | 2 | 1)	(1 | 6 | 2) / (1 | 2 | 1)	(1 |12 | 7) / (1 | 2 | 2)
70	Roseau 230 / Running 230	(0 | 1 | 0) / (1 | 2 | 1)	(0 | 0 | 0) / (1 | 1 | 1)	(0 | 1 | 1) / (1 | 2 | 1)	(0 | 0 | 0) / (1 | 1 | 1)	(0 | 1 | 1) / (1 | 2 | 2)
71	Shey 115 / Split Rock 115	(3 | 5 | 2) / (1 | 2 | 2)	(3 | 5 | 5) / (1 | 1 | 1)	(3 | 5 | 4) / (1 | 2 | 2)	(3 | 5 | 4) / (1 | 2 | 2)	(3 | 5 | 5) / (1 | 2 | 2)
72	**Damping Performance**	N/A	N/A	N/A	N/A	N/A

Appendix E.2 - Simulation Summary Tables With GI-0616 and GI-0707A (Case b04)

1	**Case No.**	11	12	13	14	15
2	**Case Name**	b04-so11aa-ef9	b04-so11aa-ei2	b04-so11aa-el3	b04-so11aa-eq1	b04-so11aa-evs
3	**Disturbance**	ef9	ei2	el3	eq1	evs
4	**Prior Outage**	None	None	None	None	None
5	**Date/Time**	OCT 28 2008 14:05	OCT 28 2008 14:09	OCT 28 2008 14:07	OCT 28 2008 13:39	OCT 28 2008 14:11
6	**Comments**					
7						
8	**Steady State Flows**					
9	NDEX / EAST BIAS	2079 / 331	2079 / 331	2079 / 331	2079 / 331	2079 / 331
10	MHEX / L20D	2174 / 252	2174 / 252	2174 / 252	2174 / 252	2174 / 252
11	ECL-ARP / PRI-BYN	555 / 692	555 / 692	555 / 692	555 / 692	555 / 692
12	MWEX / AHD-SLK	1525 / 661	1525 / 661	1525 / 661	1525 / 661	1525 / 661
13	D602F / F601C	1798 / 1545	1798 / 1545	1798 / 1545	1798 / 1545	1798 / 1545
14	B10T / MH>SPC	166 / 62	166 / 62	166 / 62	166 / 62	166 / 62
15	OH E-W / OH>MH	189 / -196	189 / -196	189 / -196	189 / -196	189 / -196
16	R50M / OH>MP	158 / 150	158 / 150	158 / 150	158 / 150	158 / 150
17	G82R	-34	-34	-34	-34	-34
18	Dorsey bipole / CU bipole	3246 / 1104	3246 / 1104	3246 / 1104	3246 / 1104	3246 / 1104
19	Dorsey Reserve / Wtrtn SVC	178 / 110	178 / 110	178 / 110	178 / 110	178 / 110
20	Forbes SVC / MSC	4 / 600	4 / 600	4 / 600	4 / 600	4 / 600
21	RCDC	0	0	0	0	0
22	**Steady State Vltgs**					
23	Dorsey 500/Dorsey 230	1.000 / 1.045	1.000 / 1.045	1.000 / 1.045	1.000 / 1.045	1.000 / 1.045
24	Roseau 500/Forbes 500	1.017 / 0.993	1.017 / 0.993	1.017 / 0.993	1.017 / 0.993	1.017 / 0.993
25	Chisago 500/EauClaire 345	1.003 / 1.003	1.003 / 1.003	1.003 / 1.003	1.003 / 1.003	1.003 / 1.003
26	Int Falls 115/Badoura 115	1.019 / 1.013	1.019 / 1.013	1.019 / 1.013	1.019 / 1.013	1.019 / 1.013
27	Drayton 230/Groton 345	1.016 / 0.977	1.016 / 0.977	1.016 / 0.977	1.016 / 0.977	1.016 / 0.977
28	**SS OS Relay Margins**					
29	D602F at Forbes/Dorsey	208% / 323%	208% / 323%	208% / 323%	208% / 323%	208% / 323%
30	82R at Rugby/L20D at Drayton	999% / 793%	999% / 793%	999% / 793%	999% / 793%	999% / 793%
31	R50M/F3M	784% / 324%	784% / 324%	784% / 324%	784% / 324%	784% / 324%
32	B10T	327%	327%	327%	327%	327%
33	**Min/MaxTransientVltg**					
34	Arrowhd 230	0.91 | 0.95	0.92 | 1.03	0.94 | 1.01	0.95 | 1.02	0.97 | 1.04
35	Boise 115	0.99 | 1.03	0.96 | 1.05	1.00 | 1.04	0.99 | 1.03	0.99 | 1.05
36	Dorsey 230	1.04 | 1.06	1.01 | 1.07	1.02 | 1.06	1.03 | 1.06	1.01 | 1.06
37	Forbes 230	0.98 | 0.99	0.92 | 1.02	0.98 | 1.02	0.96 | 1.02	0.98 | 1.02
38	Riverton 230	0.84 | 0.92	0.85 | 1.06	0.93 | 1.05	0.91 | 1.05	0.90 | 1.04
39	Coal Creek 230	1.01 | 1.06	0.96 | 1.13	0.94 | 1.12	0.98 | 1.14	0.93 | 1.12
40	Jamestown 345	(1.01)0.46 | 0.71	0.70 | 1.05	0.73 | 1.01	0.76 | 1.01	(0.48)0.69 | 0.99
41	Drayton 230	0.84 | 0.99	0.91 | 1.12	0.99 | 1.13	0.98 | 1.09	0.95 | 1.09
42	Groton 345	(1.01)0.45 | 0.81	(0.87)0.61 | 1.06	0.81 | 1.03	0.76 | 1.04	(0.72)0.64 | 1.00
43	Minong 161	0.96 | 1.00	0.98 | 1.07	0.98 | 1.04	1.00 | 1.06	1.00 | 1.06
44	Wahpeton 115	(1.01)0.60 | 0.82	(0.79)0.74 | 1.10	0.86 | 1.07	0.83 | 1.07	(0.48)0.79 | 1.04
45	Watertown 345	(1.01)0.65 | 0.88	0.75 | 1.08	0.89 | 1.05	0.86 | 1.06	0.79 | 1.04
46	**Dynamic Voltage Warnings**					
47		63369 [JAMESTN3] 0.65	67160 [GROTON 3] 0.63		none	67160 [GROTON 3] 0.64
48		63198 [BUFFALOY] 0.65	67615 [GI-06193] 0.65			67615 [GI-06193] 0.64
49		63358 [BUFFALO3] 0.65	66512 [GROTON 7] 0.66			67203 [GROTONTY] 0.67
50		63258 [BUFFALO7] 0.67	67275 [GROTONB7] 0.66			67275 [GROTONB7] 0.68
51		63259 [ALICE 7] 0.67	67203 [GROTONTY] 0.66			66512 [GROTON 7] 0.68
52		63199 [JAMSTN1Y] 0.67	66533 [BRISTOL7] 0.67			67616 [GI-0616] 0.68
53		200 [JAMSTN2Y] 0.67 +m	93 [FORMAN Y] 0.68 +m			98 [BUFFALOY] 0.69 +m
54	Worst Case Angle Damping					
55	Dorsey SUVP / UdHold	/ 0.150		/ 0.166		/ 0.166
56	Forbes DC Red (DCAR)	507%	507%	373%	507%	352%
57	K22W (max +dP @ t, d-ang)	11.7@(0.15000,-0.3)	82.8@(3.04165,-32.7)	23.9@(2.59999,-2.9)	38.4@(1.88333,-18.2)	33.3@(2.84165,-9.0)
58	K22W (max -dP @ t, d-ang)	16.3@(0.71666,0.9)	32.7@(1.20833,3.1)	24.1@(0.70833,4.5)	13.3@(0.68333,2.3)	42.0@(1.14166,12.9)
59	K22W (max d-ang @ t, dP)	0.9@(0.71666,-16.3)	-39.0@(2.56665,65.1)	8.7@(1.09166,-12.6)	-20.3@(2.00000,37.5)	14.7@(1.34166,-33.8)
60	**OS Rel Trip / Marg**					
61	MH - OH					
62	D602F at Forbes/Dorsey	163% / 248%	91% / 132%	159% / 243%	139% / 211%	128% / 189%
63	82R at Rugby/L20D at Drayton	999% / 793%	999% / 404%	999% / 585%	999% / 501%	999% / 524%
64	R50M / F3M	629% / 256%	507% / 201%	615% / 265%	604% / 236%	572% / 250%
65	B10T	327%	49%	146%	103%	138%
66	**FSCAPS (SS/Unav/Final)**					
67	Balta 230	(0 | 3 | 3)	(0 | 3 | 0)	(0 | 3 | 0)	(0 | 2 | 0)	(0 | 3 | 0)
68	Eau Cl 345 / Park Lk 115	(3 | 3 | 3) / (0 | 0 | 0)	(3 | 3 | 2) / (0 | 0 | 0)	(3 | 3 | 3) / (0 | 0 | 0)	(3 | 3 | 3) / (0 | 0 | 0)	(3 | 3 | 3) / (0 | 0 | 0)
69	Prairie 115 / Ramsey 230	(1 |12 | 7) / (1 | 2 | 2)	(1 |11 | 3) / (1 | 2 | 1)	(1 | 6 | 1) / (1 | 2 | 1)	(1 | 7 | 1) / (1 | 2 | 1)	(1 | 7 | 2) / (1 | 2 | 2)
70	Roseau 230 / Running 230	(0 | 0 | 0) / (1 | 2 | 2)	(0 | 2 | 0) / (1 | 3 | 2)	(0 | 0 | 0) / (1 | 1 | 1)	(0 | 1 | 1) / (1 | 2 | 2)	(0 | 1 | 1) / (1 | 2 | 2)
71	Shey 115 / Split Rock 115	(3 | 5 | 5) / (1 | 2 | 2)	(3 | 5 | 2) / (1 | 2 | 2)	(3 | 5 | 4) / (1 | 2 | 2)	(3 | 5 | 3) / (1 | 2 | 2)	(3 | 5 | 5) / (1 | 2 | 2)
72	**Damping Performance**	N/A	N/A	N/A	N/A	N/A

Appendix E.2 - Simulation Summary Tables With GI-0616 and GI-0707A (Case b04)

1	**Case No.**	16	17	18	19	20
2	**Case Name**	b04-so11aa-fd1	b04-so11aa-fd3	b04-so11aa-fd4	b04-so11aa-fdk	b04-so11aa-fdl
3	**Disturbance**	fd1	fd3	fd4	fdk	fdl
4	**Prior Outage**	None	None	None	None	None
5	**Date/Time**	OCT 28 2008 13:40	OCT 28 2008 14:12	OCT 28 2008 13:43	OCT 28 2008 13:41	OCT 28 2008 13:44
6	**Comments**					
7						
8	**Steady State Flows**					
9	NDEX / EAST BIAS	2079 / 331	2079 / 331	2079 / 331	2079 / 331	2079 / 331
10	MHEX / L20D	2174 / 252	2174 / 252	2174 / 252	2174 / 252	2174 / 252
11	ECL-ARP / PRI-BYN	555 / 692	555 / 692	555 / 692	555 / 692	555 / 692
12	MWEX / AHD-SLK	1525 / 661	1525 / 661	1525 / 661	1525 / 661	1525 / 661
13	D602F / F601C	1798 / 1545	1798 / 1545	1798 / 1545	1798 / 1545	1798 / 1545
14	B10T / MH>SPC	166 / 62	166 / 62	166 / 62	166 / 62	166 / 62
15	OH E-W / OH>MH	189 / -196	189 / -196	189 / -196	189 / -196	189 / -196
16	R50M / OH>MP	158 / 150	158 / 150	158 / 150	158 / 150	158 / 150
17	G82R	-34	-34	-34	-34	-34
18	Dorsey bipole / CU bipole	3246 / 1104	3246 / 1104	3246 / 1104	3246 / 1104	3246 / 1104
19	Dorsey Reserve / Wtrtn SVC	178 / 110	178 / 110	178 / 110	178 / 110	178 / 110
20	Forbes SVC / MSC	4 / 600	4 / 600	4 / 600	4 / 600	4 / 600
21	RCDC	0	0	0	0	0
22	**Steady State Vltgs**					
23	Dorsey 500/Dorsey 230	1.000 / 1.045	1.000 / 1.045	1.000 / 1.045	1.000 / 1.045	1.000 / 1.045
24	Roseau 500/Forbes 500	1.017 / 0.993	1.017 / 0.993	1.017 / 0.993	1.017 / 0.993	1.017 / 0.993
25	Chisago 500/EauClaire 345	1.003 / 1.003	1.003 / 1.003	1.003 / 1.003	1.003 / 1.003	1.003 / 1.003
26	Int Falls 115/Badoura 115	1.019 / 1.013	1.019 / 1.013	1.019 / 1.013	1.019 / 1.013	1.019 / 1.013
27	Drayton 230/Groton 345	1.016 / 0.977	1.016 / 0.977	1.016 / 0.977	1.016 / 0.977	1.016 / 0.977
28	**SS OS Relay Margins**					
29	D602F at Forbes/Dorsey	208% / 323%	208% / 323%	208% / 323%	208% / 323%	208% / 323%
30	82R at Rugby/L20D at Drayton	999% / 793%	999% / 793%	999% / 793%	999% / 793%	999% / 793%
31	R50M/F3M	784% / 324%	784% / 324%	784% / 324%	784% / 324%	784% / 324%
32	B10T	327%	327%	327%	327%	327%
33	**Min/MaxTransientVltg**					
34	Arrowhd 230	0.97 | 1.03	0.91 | 1.01	0.92 | 1.01	0.99 | 1.04	0.94 | 1.02
35	Boise 115	0.98 | 1.03	0.99 | 1.06	0.99 | 1.05	0.99 | 1.03	1.00 | 1.03
36	Dorsey 230	1.01 | 1.06	1.00 | 1.06	1.01 | 1.06	1.03 | 1.06	1.03 | 1.06
37	Forbes 230	0.98 | 1.03	0.97 | 1.03	0.97 | 1.03	0.99 | 1.02	0.98 | 1.02
38	Riverton 230	0.91 | 1.05	0.89 | 1.06	0.92 | 1.06	0.97 | 1.06	0.97 | 1.06
39	Coal Creek 230	0.96 | 1.14	0.95 | 1.15	0.96 | 1.14	0.98 | 1.11	0.97 | 1.11
40	Jamestown 345	(0.57)0.64 | 1.02	(0.56)0.61 | 1.04	(0.53)0.64 | 1.05	0.81 | 1.05	0.78 | 1.06
41	Drayton 230	0.95 | 1.12	0.95 | 1.12	0.96 | 1.13	0.99 | 1.07	0.99 | 1.09
42	Groton 345	0.79 | 1.03	(0.72)0.66 | 1.05	0.81 | 1.05	0.90 | 1.04	0.89 | 1.05
43	Minong 161	1.00 | 1.05	0.96 | 1.05	0.97 | 1.04	1.03 | 1.07	1.00 | 1.06
44	Wahpeton 115	0.80 | 1.07	(0.56)0.77 | 1.09	0.81 | 1.09	0.92 | 1.08	0.92 | 1.10
45	Watertown 345	0.87 | 1.05	0.80 | 1.06	0.88 | 1.06	0.95 | 1.05	0.95 | 1.05
46	**Dynamic Voltage Warnings**					
47		63369 [JAMESTN3] 0.65	63369 [JAMESTN3] 0.62	63369 [JAMESTN3] 0.64	none	none
48		63198 [BUFFALOY] 0.67	63358 [BUFFALO3] 0.64	63199 [JAMSTN1Y] 0.66		
49		63358 [BUFFALO3] 0.67	63198 [BUFFALOY] 0.64	63200 [JAMSTN2Y] 0.66		
50		63199 [JAMSTN1Y] 0.67	63199 [JAMSTN1Y] 0.65	63198 [BUFFALOY] 0.67		
51		63200 [JAMSTN2Y] 0.67	63200 [JAMSTN2Y] 0.65	63358 [BUFFALO3] 0.67		
52		63258 [BUFFALO7] 0.68	63258 [BUFFALO7] 0.66	63269 [JAMSTWN7] 0.68		
53		3259 [ALICE 7] 0.69 +mo	3259 [ALICE 7] 0.66 +mo	258 [BUFFALO7] 0.69 +m		
54	Worst Case Angle Damping					
55	Dorsey SUVP / UdHold		/ 0.166			
56	Forbes DC Red (DCAR)	326%	254%	306%	476%	468%
57	K22W (max +dP @ t, d-ang)	3.8@(0.13333,-0.2)	39.8@(2.82498,-5.6)	3.8@(0.13333,-0.2)	32.7@(2.00000,-16.5)	35.4@(2.00000,-16.6)
58	K22W (max -dP @ t, d-ang)	30.9@(0.98333,7.3)	41.2@(1.02500,12.5)	26.9@(0.90000,6.5)	4.4@(0.59166,-0.6)	4.6@(0.60833,-0.4)
59	K22W (max d-ang @ t, dP)	10.9@(1.29166,-17.2)	16.1@(1.30833,-29.2)	10.4@(1.22500,-12.2)	-16.5@(2.00000,32.7)	-16.6@(2.00000,35.4)
60	**OS Rel Trip / Marg**					
61	MH - OH					
62	D602F at Forbes/Dorsey	133% / 199%	131% / 196%	148% / 226%	172% / 264%	171% / 263%
63	82R at Rugby/L20D at Drayton	999% / 543%	999% / 435%	999% / 506%	999% / 550%	999% / 483%
64	R50M / F3M	565% / 249%	567% / 253%	624% / 265%	635% / 244%	632% / 254%
65	B10T	134%	82%	112%	134%	108%
66	**FSCAPS (SS/Unav/Final)**					
67	Balta 230	(0 | 1 | 0)	(0 | 2 | 0)	(0 | 1 | 0)	(0 | 0 | 0)	(0 | 0 | 0)
68	Eau Cl 345 / Park Lk 115	(3 | 3 | 3) / (0 | 0 | 0)	(3 | 3 | 3) / (0 | 0 | 0)	(3 | 3 | 3) / (0 | 0 | 0)	(3 | 3 | 3) / (0 | 0 | 0)	(3 | 3 | 3) / (0 | 0 | 0)
69	Prairie 115 / Ramsey 230	(1 | 9 | 3) / (1 | 2 | 1)	(1 |10 | 2) / (1 | 2 | 0)	(1 | 9 | 3) / (1 | 1 | 1)	(1 | 3 | 1) / (1 | 2 | 2)	(1 | 5 | 2) / (1 | 1 | 1)
70	Roseau 230 / Running 230	(0 | 1 | 1) / (1 | 2 | 2)	(0 | 1 | 1) / (1 | 2 | 1)	(0 | 1 | 1) / (1 | 2 | 2)	(0 | 0 | 0) / (1 | 1 | 1)	(0 | 0 | 0) / (1 | 1 | 1)
71	Shey 115 / Split Rock 115	(3 | 5 | 3) / (1 | 2 | 2)	(3 | 5 | 3) / (1 | 2 | 2)	(3 | 5 | 2) / (1 | 2 | 2)	(3 | 5 | 2) / (1 | 1 | 1)	(3 | 5 | 1) / (1 | 1 | 1)
72	**Damping Performance**	N/A	N/A	N/A	N/A	N/A

Appendix E.2 - Simulation Summary Tables With GI-0616 and GI-0707A (Case b04)

1	**Case No.**	21	22	23	24	25
2	**Case Name**	b04-so11aa-fds	b04-so11aa-ha3	b04-so11aa-hb3	b04-so11aa-hc3	b04-so11aa-hd3
3	**Disturbance**	fds	ha3	hb3	hc3	hd3
4	**Prior Outage**	None	None	None	None	None
5	**Date/Time**	OCT 28 2008 14:14	OCT 29 2008 11:42	OCT 28 2008 14:20	OCT 28 2008 14:21	NOV 03 2008 16:15
6	**Comments**					
7						
8	**Steady State Flows**					
9	NDEX / EAST BIAS	2079 / 331	2079 / 331	2079 / 331	2079 / 331	2079 / 331
10	MHEX / L20D	2174 / 252	2174 / 252	2174 / 252	2174 / 252	2174 / 252
11	ECL-ARP / PRI-BYN	555 / 692	555 / 692	555 / 692	555 / 692	555 / 692
12	MWEX / AHD-SLK	1525 / 661	1525 / 661	1525 / 661	1525 / 661	1525 / 661
13	D602F / F601C	1798 / 1545	1798 / 1545	1798 / 1545	1798 / 1545	1798 / 1545
14	B10T / MH>SPC	166 / 62	166 / 62	166 / 62	166 / 62	166 / 62
15	OH E-W / OH>MH	189 / -196	189 / -196	189 / -196	189 / -196	189 / -196
16	R50M / OH>MP	158 / 150	158 / 150	158 / 150	158 / 150	158 / 150
17	G82R	-34	-34	-34	-34	-34
18	Dorsey bipole / CU bipole	3246 / 1104	3246 / 1104	3246 / 1104	3246 / 1104	3246 / 1104
19	Dorsey Reserve / Wtrtn SVC	178 / 110	178 / 110	178 / 110	178 / 110	178 / 110
20	Forbes SVC / MSC	4 / 600	4 / 600	4 / 600	4 / 600	4 / 600
21	RCDC	0	0	0	0	0
22	**Steady State Vltgs**					
23	Dorsey 500/Dorsey 230	1.000 / 1.045	1.000 / 1.045	1.000 / 1.045	1.000 / 1.045	1.000 / 1.045
24	Roseau 500/Forbes 500	1.017 / 0.993	1.017 / 0.993	1.017 / 0.993	1.017 / 0.993	1.017 / 0.993
25	Chisago 500/EauClaire 345	1.003 / 1.003	1.003 / 1.003	1.003 / 1.003	1.003 / 1.003	1.003 / 1.003
26	Int Falls 115/Badoura 115	1.019 / 1.013	1.019 / 1.013	1.019 / 1.013	1.019 / 1.013	1.019 / 1.013
27	Drayton 230/Groton 345	1.016 / 0.977	1.016 / 0.977	1.016 / 0.977	1.016 / 0.977	1.016 / 0.977
28	**SS OS Relay Margins**					
29	D602F at Forbes/Dorsey	208% / 323%	208% / 323%	208% / 323%	208% / 323%	208% / 323%
30	82R at Rugby/L20D at Drayton	999% / 793%	999% / 793%	999% / 793%	999% / 793%	999% / 793%
31	R50M/F3M	784% / 324%	784% / 324%	784% / 324%	784% / 324%	784% / 324%
32	B10T	327%	327%	327%	327%	327%
33	**Min/MaxTransientVltg**					
34	Arrowhd 230	0.93 | 1.01	0.99 | 1.00	0.97 | 1.01	0.98 | 0.99	0.98 | 0.99
35	Boise 115	0.99 | 1.06	1.01 | 1.02	1.00 | 1.03	1.01 | 1.02	1.01 | 1.02
36	Dorsey 230	1.02 | 1.06	1.04 | 1.05	1.03 | 1.06	1.04 | 1.05	1.04 | 1.05
37	Forbes 230	0.97 | 1.03	1.00 | 1.01	0.98 | 1.02	1.00 | 1.00	1.00 | 1.00
38	Riverton 230	0.92 | 1.06	1.00 | 1.02	0.97 | 1.05	1.00 | 1.01	0.99 | 1.01
39	Coal Creek 230	0.96 | 1.14	1.02 | 1.05	0.96 | 1.12	1.01 | 1.05	1.00 | 1.05
40	Jamestown 345	(0.48)0.69 | 1.03	0.94 | 0.96	0.85 | 1.02	0.90 | 0.94	0.90 | 0.95
41	Drayton 230	0.98 | 1.11	1.01 | 1.02	0.98 | 1.09	0.99 | 1.02	0.99 | 1.02
42	Groton 345	0.80 | 1.04	0.83 | 1.05	0.78 | 1.02	1.02 | 1.08	1.03 | 1.08
43	Minong 161	0.97 | 1.04	1.02 | 1.03	1.00 | 1.04	1.02 | 1.03	1.01 | 1.03
44	Wahpeton 115	0.82 | 1.08	0.99 | 1.02	0.92 | 1.07	0.97 | 1.01	0.97 | 1.01
45	Watertown 345	0.88 | 1.05	0.95 | 1.05	0.92 | 1.03	1.03 | 1.05	1.03 | 1.05
46	**Dynamic Voltage Warnings**					
47		63369 [JAMESTN3] 0.69	67616 [GI-0616] 0.09	67616 [GI-0616] 0.64	none	none
48			67615 [GI-06193] 0.23	67615 [GI-06193] 0.67		
49			67160 [GROTON 3] 0.60			
50			67203 [GROTONTY] 0.65			
51			66512 [GROTON 7] 0.67			
52			67275 [GROTONB7] 0.67			
53						
54	Worst Case Angle Damping					
55	Dorsey SUVP / UdHold	/ 0.166				
56	Forbes DC Red (DCAR)	340%	502%	395%	507%	499%
57	K22W (max +dP @ t, d-ang)	26.4@(2.70832,-2.8)	4.1@(1.17500,-1.4)	14.0@(2.49166,-1.2)	1.7@(0.13333,0.0)	1.5@(0.12500,0.0)
58	K22W (max -dP @ t, d-ang)	24.7@(0.96666,8.8)	4.3@(2.95832,0.4)	15.8@(0.73333,4.2)	8.8@(4.39163,1.5)	8.8@(2.04166,1.2)
59	K22W (max d-ang @ t, dP)	10.4@(1.16666,-16.7)	-2.0@(1.47500,2.3)	5.9@(1.01666,-6.8)	2.0@(4.91662,-6.2)	2.6@(1.26666,-5.2)
60	**OS Rel Trip / Marg**					
61	MH - OH					
62	D602F at Forbes/Dorsey	152% / 232%	200% / 310%	166% / 255%	186% / 288%	183% / 282%
63	82R at Rugby/L20D at Drayton	999% / 523%	999% / 735%	999% / 621%	999% / 757%	999% / 758%
64	R50M / F3M	617% / 265%	765% / 308%	665% / 277%	721% / 310%	710% / 305%
65	B10T	129%	293%	185%	327%	327%
66	**FSCAPS (SS/Unav/Final)**					
67	Balta 230	(0 | 2 | 0)	(0 | 0 | 0)	(0 | 0 | 0)	(0 | 0 | 0)	(0 | 0 | 0)
68	Eau Cl 345 / Park Lk 115	(3 | 3 | 3) / (0 | 0 | 0)	(3 | 3 | 3) / (0 | 0 | 0)	(3 | 3 | 3) / (0 | 0 | 0)	(3 | 3 | 3) / (0 | 0 | 0)	(3 | 3 | 3) / (0 | 0 | 0)
69	Prairie 115 / Ramsey 230	(1 | 9 | 2) / (1 | 2 | 1)	(1 | 1 | 1) / (1 | 1 | 1)	(1 | 5 | 2) / (1 | 2 | 1)	(1 | 3 | 2) / (1 | 1 | 1)	(1 | 3 | 2) / (1 | 1 | 1)
70	Roseau 230 / Running 230	(0 | 1 | 1) / (1 | 2 | 1)	(0 | 0 | 0) / (1 | 1 | 1)	(0 | 0 | 0) / (1 | 1 | 1)	(0 | 0 | 0) / (1 | 1 | 1)	(0 | 0 | 0) / (1 | 1 | 1)
71	Shey 115 / Split Rock 115	(3 | 5 | 3) / (1 | 2 | 2)	(3 | 3 | 3) / (1 | 1 | 1)	(3 | 5 | 4) / (1 | 1 | 1)	(3 | 4 | 4) / (1 | 1 | 1)	(3 | 4 | 4) / (1 | 1 | 1)
72	**Damping Performance**	N/A	N/A	N/A	N/A	N/A

Appendix E.2 - Simulation Summary Tables With GI-0616 and GI-0707A (Case b04)

1	**Case No.**	26	27	28	29	30
2	**Case Name**	b04-so11aa-he3	b04-so11aa-nmz	b04-so11aa-pcs	b04-so11aa-pct	b04-so11aa-pys
3	**Disturbance**	he3	nmz	pcs	pct	pys
4	**Prior Outage**	None	None	None	None	None
5	**Date/Time**	NOV 03 2008 16:17	OCT 28 2008 14:23	OCT 28 2008 13:23	OCT 28 2008 13:27	OCT 28 2008 13:30
6	**Comments**					
7						
8	**Steady State Flows**					
9	NDEX / EAST BIAS	2079 / 331	2079 / 331	2079 / 331	2079 / 331	2079 / 331
10	MHEX / L20D	2174 / 252	2174 / 252	2174 / 252	2174 / 252	2174 / 252
11	ECL-ARP / PRI-BYN	555 / 692	555 / 692	555 / 692	555 / 692	555 / 692
12	MWEX / AHD-SLK	1525 / 661	1525 / 661	1525 / 661	1525 / 661	1525 / 661
13	D602F / F601C	1798 / 1545	1798 / 1545	1798 / 1545	1798 / 1545	1798 / 1545
14	B10T / MH>SPC	166 / 62	166 / 62	166 / 62	166 / 62	166 / 62
15	OH E-W / OH>MH	189 / -196	189 / -196	189 / -196	189 / -196	189 / -196
16	R50M / OH>MP	158 / 150	158 / 150	158 / 150	158 / 150	158 / 150
17	G82R	-34	-34	-34	-34	-34
18	Dorsey bipole / CU bipole	3246 / 1104	3246 / 1104	3246 / 1104	3246 / 1104	3246 / 1104
19	Dorsey Reserve / Wtrtn SVC	178 / 110	178 / 110	178 / 110	178 / 110	178 / 110
20	Forbes SVC / MSC	4 / 600	4 / 600	4 / 600	4 / 600	4 / 600
21	RCDC	0	0	0	0	0
22	**Steady State Vltgs**					
23	Dorsey 500/Dorsey 230	1.000 / 1.045	1.000 / 1.045	1.000 / 1.045	1.000 / 1.045	1.000 / 1.045
24	Roseau 500/Forbes 500	1.017 / 0.993	1.017 / 0.993	1.017 / 0.993	1.017 / 0.993	1.017 / 0.993
25	Chisago 500/EauClaire 345	1.003 / 1.003	1.003 / 1.003	1.003 / 1.003	1.003 / 1.003	1.003 / 1.003
26	Int Falls 115/Badoura 115	1.019 / 1.013	1.019 / 1.013	1.019 / 1.013	1.019 / 1.013	1.019 / 1.013
27	Drayton 230/Groton 345	1.016 / 0.977	1.016 / 0.977	1.016 / 0.977	1.016 / 0.977	1.016 / 0.977
28	**SS OS Relay Margins**					
29	D602F at Forbes/Dorsey	208% / 323%	208% / 323%	208% / 323%	208% / 323%	208% / 323%
30	82R at Rugby/L20D at Drayton	999% / 793%	999% / 793%	999% / 793%	999% / 793%	999% / 793%
31	R50M/F3M	784% / 324%	784% / 324%	784% / 324%	784% / 324%	784% / 324%
32	B10T	327%	327%	327%	327%	327%
33	**Min/MaxTransientVltg**					
34	Arrowhd 230	0.94 | 1.03	0.91 | 1.05	0.83 | 0.96	0.91 | 0.94	0.95 | 1.00
35	Boise 115	0.99 | 1.05	0.92 | 1.04	1.00 | 1.06	1.02 | 1.03	0.99 | 1.05
36	Dorsey 230	1.01 | 1.07	1.04 | 1.17	1.02 | 1.10	1.04 | 1.05	1.02 | 1.08
37	Forbes 230	0.97 | 1.02	0.97 | 1.03	0.98 | 1.03	0.99 | 1.00	0.99 | 1.05
38	Riverton 230	0.93 | 1.06	0.87 | 1.04	0.97 | 1.03	1.00 | 1.02	1.00 | 1.03
39	Coal Creek 230	0.94 | 1.11	0.93 | 1.11	0.96 | 1.07	1.02 | 1.04	0.98 | 1.08
40	Jamestown 345	0.71 | 1.04	0.76 | 1.00	0.88 | 0.99	0.94 | 0.96	0.90 | 0.99
41	Drayton 230	0.95 | 1.08	0.96 | 1.12	1.00 | 1.05	1.01 | 1.03	1.01 | 1.06
42	Groton 345	0.90 | 1.11	(0.82)0.69 | 1.02	0.90 | 0.99	0.96 | 0.99	0.92 | 0.99
43	Minong 161	0.98 | 1.07	0.97 | 1.08	0.82 | 0.99	0.93 | 0.96	0.96 | 1.03
44	Wahpeton 115	0.82 | 1.10	(0.82)0.78 | 1.04	0.96 | 1.05	1.00 | 1.02	0.98 | 1.04
45	Watertown 345	0.93 | 1.10	0.81 | 1.04	0.96 | 1.02	1.00 | 1.02	0.97 | 1.02
46	**Dynamic Voltage Warnings**					
47		67120 [BRDLAND3] 0.65	67160 [GROTON 3] 0.69	none	none	none
48		67326 [ELLENDL4] 0.69	67615 [GI-06193] 0.69			
49		67616 [GI-0616] 0.69				
50						
51						
52						
53						
54	Worst Case Angle Damping			SHERC3 / 68.69%	SHERC3 / 57.90%	SHERC3 / 77.19%
55	Dorsey SUVP / UdHold		/ 0.133			
56	Forbes DC Red (DCAR)	441%	507%	82%	296%	154%
57	K22W (max +dP @ t, d-ang)	71.7@(3.41664,-22.3)	139.2@(2.75832,-57.9)	7.7@(3.59164,0.4)	0.0@(0.10000,0.0)	14.4@(2.57499,-1.1)
58	K22W (max -dP @ t, d-ang)	52.0@(1.77500,18.4)	89.6@(0.23333,7.1)	55.6@(1.52500,22.3)	33.5@(2.15833,13.5)	31.5@(1.70833,7.9)
59	K22W (max d-ang @ t, dP)	-24.2@(3.16665,55.5)	-60.2@(2.47499,121.6)	26.4@(1.15833,-54.6)	13.5@(2.14166,-33.5)	18.2@(1.09166,-29.7)
60	**OS Rel Trip / Marg**					
61	MH - OH					
62	D602F at Forbes/Dorsey	106% / 153%	0.18333 sec / 0.18333 sec	153% / 231%	207% / 322%	149% / 225%
63	82R at Rugby/L20D at Drayton	999% / 400%	999% / 510%	999% / 510%	999% / 713%	999% / 577%
64	R50M / F3M	510% / 251%	317% / 145%	542% / 324%	718% / 324%	584% / 299%
65	B10T	55%	125%	137%	279%	165%
66	**FSCAPS (SS/Unav/Final)**					
67	Balta 230	(0 | 3 | 0)	(0 | 2 | 0)	(0 | 0 | 0)	(0 | 0 | 0)	(0 | 0 | 0)
68	Eau Cl 345 / Park Lk 115	(3 | 3 | 3) / (0 | 0 | 0)	(3 | 3 | 1) / (0 | 0 | 0)	(3 | 4 | 3) / (0 | 3 | 3)	(3 | 3 | 3) / (0 | 0 | 0)	(3 | 4 | 4) / (0 | 3 | 3)
69	Prairie 115 / Ramsey 230	(1 |10 | 2) / (1 | 2 | 1)	(1 | 8 | 1) / (1 | 2 | 1)	(1 | 3 | 2) / (1 | 1 | 1)	(1 | 1 | 1) / (1 | 1 | 1)	(1 | 3 | 2) / (1 | 1 | 1)
70	Roseau 230 / Running 230	(0 | 1 | 0) / (1 | 2 | 1)	(0 | 2 | 0) / (1 | 4 | 2)	(0 | 1 | 1) / (1 | 2 | 2)	(0 | 0 | 0) / (1 | 1 | 1)	(0 | 1 | 1) / (1 | 1 | 1)
71	Shey 115 / Split Rock 115	(3 | 5 | 2) / (1 | 2 | 2)	(3 | 5 | 5) / (1 | 2 | 2)	(3 | 5 | 5) / (1 | 1 | 1)	(3 | 3 | 3) / (1 | 1 | 1)	(3 | 4 | 4) / (1 | 1 | 1)
72	**Damping Performance**	N/A	N/A	N/A	N/A	N/A

Appendix E.2 - Simulation Summary Tables With GI-0616 and GI-0707A (Case b04)

1	**Case No.**	31	32	33
2	**Case Name**	b04-so11aa-pyt	b04-so11aa-ya3	b04-so11aa-yas
3	**Disturbance**	pyt	ya3	yas
4	**Prior Outage**	None	None	None
5	**Date/Time**	OCT 28 2008 13:34	OCT 28 2008 14:16	OCT 28 2008 13:46
6	**Comments**			
7				
8	**Steady State Flows**			
9	NDEX / EAST BIAS	2079 / 331	2079 / 331	2079 / 331
10	MHEX / L20D	2174 / 252	2174 / 252	2174 / 252
11	ECL-ARP / PRI-BYN	555 / 692	555 / 692	555 / 692
12	MWEX / AHD-SLK	1525 / 661	1525 / 661	1525 / 661
13	D602F / F601C	1798 / 1545	1798 / 1545	1798 / 1545
14	B10T / MH>SPC	166 / 62	166 / 62	166 / 62
15	OH E-W / OH>MH	189 / -196	189 / -196	189 / -196
16	R50M / OH>MP	158 / 150	158 / 150	158 / 150
17	G82R	-34	-34	-34
18	Dorsey bipole / CU bipole	3246 / 1104	3246 / 1104	3246 / 1104
19	Dorsey Reserve / Wtrtn SVC	178 / 110	178 / 110	178 / 110
20	Forbes SVC / MSC	4 / 600	4 / 600	4 / 600
21	RCDC	0	0	0
22	**Steady State Vltgs**			
23	Dorsey 500/Dorsey 230	1.000 / 1.045	1.000 / 1.045	1.000 / 1.045
24	Roseau 500/Forbes 500	1.017 / 0.993	1.017 / 0.993	1.017 / 0.993
25	Chisago 500/EauClaire 345	1.003 / 1.003	1.003 / 1.003	1.003 / 1.003
26	Int Falls 115/Badoura 115	1.019 / 1.013	1.019 / 1.013	1.019 / 1.013
27	Drayton 230/Groton 345	1.016 / 0.977	1.016 / 0.977	1.016 / 0.977
28	**SS OS Relay Margins**			
29	D602F at Forbes/Dorsey	208% / 323%	208% / 323%	208% / 323%
30	82R at Rugby/L20D at Drayton	999% / 793%	999% / 793%	999% / 793%
31	R50M/F3M	784% / 324%	784% / 324%	784% / 324%
32	B10T	327%	327%	327%
33	**Min/MaxTransientVltg**			
34	Arrowhd 230	0.97 | 0.99	0.99 | 1.00	0.92 | 0.99
35	Boise 115	1.02 | 1.03	1.02 | 1.04	1.03 | 1.06
36	Dorsey 230	1.04 | 1.05	1.04 | 1.05	1.04 | 1.07
37	Forbes 230	1.00 | 1.02	1.00 | 1.01	0.99 | 1.02
38	Riverton 230	1.01 | 1.03	1.00 | 1.02	0.97 | 1.02
39	Coal Creek 230	1.02 | 1.05	1.02 | 1.05	0.99 | 1.06
40	Jamestown 345	0.95 | 0.96	0.95 | 0.97	0.93 | 0.97
41	Drayton 230	1.01 | 1.03	1.01 | 1.03	1.00 | 1.03
42	Groton 345	0.97 | 0.98	0.96 | 0.98	0.95 | 0.98
43	Minong 161	1.00 | 1.02	0.96 | 0.99	1.01 | 1.09
44	Wahpeton 115	1.01 | 1.02	1.00 | 1.02	0.99 | 1.02
45	Watertown 345	1.00 | 1.01	1.00 | 1.01	1.00 | 1.01
46	**Dynamic Voltage Warnings**			
47		none	none	39449] 1.24
48				
49				
50				
51				
52				
53				
54	Worst Case Angle Damping	SHERC3 / 59.93%		
55	Dorsey SUVP / UdHold			
56	Forbes DC Red (DCAR)	353%	393%	385%
57	K22W (max +dP @ t, d-ang)	0.0@(0.10000,0.0)	4.0@(0.11667,0.8)	2.6@(0.11667,0.4)
58	K22W (max -dP @ t, d-ang)	20.7@(1.83333,7.9)	25.6@(1.70000,11.0)	24.8@(1.24166,9.7)
59	K22W (max d-ang @ t, dP)	8.4@(2.20833,-19.3)	11.2@(1.98333,-22.7)	9.7@(1.20833,-24.7)
60	**OS Rel Trip / Marg**			
61	MH - OH			
62	D602F at Forbes/Dorsey	208% / 323%	204% / 319%	187% / 289%
63	82R at Rugby/L20D at Drayton	999% / 728%	999% / 689%	999% / 682%
64	R50M / F3M	763% / 324%	784% / 324%	739% / 324%
65	B10T	282%	265%	249%
66	**FSCAPS (SS/Unav/Final)**			
67	Balta 230	(0 | 0 | 0)	(0 | 0 | 0)	(0 | 0 | 0)
68	Eau Cl 345 / Park Lk 115	(3 | 3 | 3) / (0 | 0 | 0)	(3 | 4 | 4) / (0 | 0 | 0)	(3 | 4 | 4) / (0 | 0 | 0)
69	Prairie 115 / Ramsey 230	(1 | 1 | 1) / (1 | 1 | 1)	(1 | 1 | 1) / (1 | 1 | 1)	(1 | 1 | 1) / (1 | 1 | 1)
70	Roseau 230 / Running 230	(0 | 0 | 0) / (1 | 1 | 1)	(0 | 0 | 0) / (1 | 1 | 1)	(0 | 0 | 0) / (1 | 2 | 2)
71	Shey 115 / Split Rock 115	(3 | 3 | 3) / (1 | 1 | 1)	(3 | 3 | 3) / (1 | 1 | 1)	(3 | 3 | 3) / (1 | 1 | 1)
72	**Damping Performance**	N/A	N/A	N/A

Appendix E.3 - Simulation Summary Tables Without GI-0616 and GI-0707A and Without GI-0619 (Case b12)

1	**Case No.**	1	2	3	4	5
2	**Case Name**	b12-so11aa-zss	b12-so11aa-ac3	b12-so11aa-ad3	b12-so11aa-ag1	b12-so11aa-ag3
3	**Disturbance**	zss	ac3	ad3	ag1	ag3
4	**Prior Outage**	None	None	None	None	None
5	**Date/Time**	OCT 29 2008 14:11	OCT 29 2008 14:12	OCT 29 2008 14:14	OCT 29 2008 15:00	OCT 29 2008 14:16
6	**Comments**					
7						
8	**Steady State Flows**					
9	NDEX / EAST BIAS	2079 / 362	2079 / 362	2079 / 362	2079 / 362	2079 / 362
10	MHEX / L20D	2173 / 235	2173 / 235	2173 / 235	2173 / 235	2173 / 235
11	ECL-ARP / PRI-BYN	550 / 694	550 / 694	550 / 694	550 / 694	550 / 694
12	MWEX / AHD-SLK	1524 / 664	1524 / 664	1524 / 664	1524 / 664	1524 / 664
13	D602F / F601C	1807 / 1565	1807 / 1565	1807 / 1565	1807 / 1565	1807 / 1565
14	B10T / MH>SPC	166 / 61	166 / 61	166 / 61	166 / 61	166 / 61
15	OH E-W / OH>MH	189 / -196	189 / -196	189 / -196	189 / -196	189 / -196
16	R50M / OH>MP	158 / 150	158 / 150	158 / 150	158 / 150	158 / 150
17	G82R	-27	-27	-27	-27	-27
18	Dorsey bipole / CU bipole	3243 / 1103	3243 / 1103	3243 / 1103	3243 / 1103	3243 / 1103
19	Dorsey Reserve / Wtrtn SVC	176 / 20	176 / 20	176 / 20	176 / 20	176 / 20
20	Forbes SVC / MSC	31 / 600	31 / 600	31 / 600	31 / 600	31 / 600
21	RCDC	0	0	0	0	0
22	**Steady State Vltgs**					
23	Dorsey 500/Dorsey 230	0.999 / 1.045	0.999 / 1.045	0.999 / 1.045	0.999 / 1.045	0.999 / 1.045
24	Roseau 500/Forbes 500	1.018 / 0.993	1.018 / 0.993	1.018 / 0.993	1.018 / 0.993	1.018 / 0.993
25	Chisago 500/EauClaire 345	1.002 / 1.002	1.002 / 1.002	1.002 / 1.002	1.002 / 1.002	1.002 / 1.002
26	Int Falls 115/Badoura 115	1.021 / 1.009	1.021 / 1.009	1.021 / 1.009	1.021 / 1.009	1.021 / 1.009
27	Drayton 230/Groton 345	1.018 / 1.012	1.018 / 1.012	1.018 / 1.012	1.018 / 1.012	1.018 / 1.012
28	**SS OS Relay Margins**					
29	D602F at Forbes/Dorsey	205% / 319%	205% / 319%	205% / 319%	205% / 319%	205% / 319%
30	82R at Rugby/L20D at Drayton	999% / 872%	999% / 872%	999% / 872%	999% / 872%	999% / 872%
31	R50M/F3M	781% / 325%	781% / 325%	781% / 325%	781% / 325%	781% / 325%
32	B10T	331%	331%	331%	331%	331%
33	**Min/MaxTransientVltg**					
34	Arrowhd 230	0.99 | 0.99	0.96 | 1.00	0.97 | 1.01	0.96 | 1.00	0.95 | 1.00
35	Boise 115	1.02 | 1.02	0.99 | 1.05	1.00 | 1.03	0.99 | 1.06	0.99 | 1.06
36	Dorsey 230	1.04 | 1.04	1.02 | 1.06	1.03 | 1.06	1.02 | 1.06	1.02 | 1.06
37	Forbes 230	1.00 | 1.00	0.98 | 1.02	0.98 | 1.02	0.98 | 1.02	0.98 | 1.02
38	Riverton 230	1.00 | 1.00	0.96 | 1.03	0.98 | 1.05	0.96 | 1.04	0.95 | 1.03
39	Coal Creek 230	1.03 | 1.03	0.96 | 1.12	0.97 | 1.12	0.96 | 1.12	0.96 | 1.12
40	Jamestown 345	0.96 | 0.96	0.85 | 1.02	0.90 | 1.04	0.86 | 1.03	0.85 | 1.02
41	Drayton 230	1.02 | 1.02	0.99 | 1.10	0.99 | 1.08	0.98 | 1.08	0.99 | 1.10
42	Groton 345	1.01 | 1.01	0.86 | 1.03	0.89 | 1.06	0.86 | 1.04	0.85 | 1.04
43	Minong 161	1.03 | 1.03	1.00 | 1.04	1.01 | 1.05	1.00 | 1.04	1.00 | 1.04
44	Wahpeton 115	1.02 | 1.02	0.92 | 1.07	0.96 | 1.09	0.93 | 1.08	0.92 | 1.07
45	Watertown 345	1.02 | 1.02	0.95 | 1.04	0.95 | 1.05	0.94 | 1.04	0.94 | 1.04
46	**Dynamic Voltage Warnings**					
47		none	none	none	none	none
48						
49						
50						
51						
52						
53						
54	Worst Case Angle Damping					
55	Dorsey SUVP / UdHold					
56	Forbes DC Red (DCAR)	504%	398%	386%	402%	386%
57	K22W (max +dP @ t, d-ang)	0.0@(0.20000,0.0)	9.6@(2.57499,0.3)	13.2@(2.44166,-0.6)	2.1@(0.13333,-0.1)	11.8@(2.54999,0.1)
58	K22W (max -dP @ t, d-ang)	0.6@(4.84162,0.3)	22.9@(0.81666,6.5)	14.8@(0.70833,3.6)	23.3@(0.82500,6.1)	23.8@(0.80000,7.1)
59	K22W (max d-ang @ t, dP)	0.3@(4.99995,-0.5)	8.8@(1.08333,-12.0)	5.2@(0.98333,-4.8)	8.5@(1.09166,-10.6)	9.3@(1.05833,-13.0)
60	**OS Rel Trip / Marg**					
61	MH - OH					
62	D602F at Forbes/Dorsey	205% / 318%	147% / 222%	167% / 256%	148% / 224%	145% / 220%
63	82R at Rugby/L20D at Drayton	999% / 871%	999% / 658%	999% / 671%	999% / 646%	999% / 640%
64	R50M / F3M	781% / 325%	611% / 269%	670% / 277%	614% / 267%	607% / 266%
65	B10T	331%	185%	183%	177%	169%
66	**FSCAPS (SS/Unav/Final)**					
67	Balta 230	(0 | 0 | 0)	(0 | 1 | 0)	(0 | 0 | 0)	(0 | 0 | 0)	(0 | 1 | 0)
68	Eau Cl 345 / Park Lk 115	(3 | 3 | 3) / (0 | 0 | 0)	(3 | 3 | 3) / (0 | 0 | 0)	(3 | 3 | 3) / (0 | 0 | 0)	(3 | 3 | 3) / (0 | 0 | 0)	(3 | 3 | 3) / (0 | 0 | 0)
69	Prairie 115 / Ramsey 230	(1 | 1 | 1) / (0 | 0 | 0)	(1 | 5 | 2) / (0 | 2 | 1)	(1 | 2 | 1) / (0 | 1 | 0)	(1 | 6 | 3) / (0 | 1 | 0)	(1 | 5 | 2) / (0 | 2 | 1)
70	Roseau 230 / Running 230	(0 | 0 | 0) / (1 | 1 | 1)	(0 | 1 | 1) / (1 | 2 | 2)	(0 | 0 | 0) / (1 | 1 | 1)	(0 | 1 | 1) / (1 | 2 | 2)	(0 | 1 | 1) / (1 | 2 | 2)
71	Shey 115 / Split Rock 115	(2 | 2 | 2) / (1 | 1 | 1)	(2 | 5 | 4) / (1 | 1 | 1)	(2 | 5 | 2) / (1 | 1 | 1)	(2 | 5 | 3) / (1 | 1 | 1)	(2 | 5 | 4) / (1 | 2 | 2)
72	**Damping Performance**	N/A	N/A	N/A	N/A	N/A

Appendix E.3 - Simulation Summary Tables Without GI-0616 and GI-0707A and Without GI-0619 (Case b12)

1	**Case No.**	6	7	8	9	10
2	**Case Name**	b12-so11aa-bl3	b12-so11aa-eb3	b12-so11aa-ec3	b12-so11aa-ecs	b12-so11aa-ef3
3	**Disturbance**	bl3	eb3	ec3	ecs	ef3
4	**Prior Outage**	None	None	None	None	None
5	**Date/Time**	OCT 29 2008 14:18	OCT 29 2008 14:20	OCT 29 2008 14:22	OCT 29 2008 14:24	OCT 29 2008 14:26
6	**Comments**					
7						
8	**Steady State Flows**					
9	NDEX / EAST BIAS	2079 / 362	2079 / 362	2079 / 362	2079 / 362	2079 / 362
10	MHEX / L20D	2173 / 235	2173 / 235	2173 / 235	2173 / 235	2173 / 235
11	ECL-ARP / PRI-BYN	550 / 694	550 / 694	550 / 694	550 / 694	550 / 694
12	MWEX / AHD-SLK	1524 / 664	1524 / 664	1524 / 664	1524 / 664	1524 / 664
13	D602F / F601C	1807 / 1565	1807 / 1565	1807 / 1565	1807 / 1565	1807 / 1565
14	B10T / MH>SPC	166 / 61	166 / 61	166 / 61	166 / 61	166 / 61
15	OH E-W / OH>MH	189 / -196	189 / -196	189 / -196	189 / -196	189 / -196
16	R50M / OH>MP	158 / 150	158 / 150	158 / 150	158 / 150	158 / 150
17	G82R	-27	-27	-27	-27	-27
18	Dorsey bipole / CU bipole	3243 / 1103	3243 / 1103	3243 / 1103	3243 / 1103	3243 / 1103
19	Dorsey Reserve / Wtrtn SVC	176 / 20	176 / 20	176 / 20	176 / 20	176 / 20
20	Forbes SVC / MSC	31 / 600	31 / 600	31 / 600	31 / 600	31 / 600
21	RCDC	0	0	0	0	0
22	**Steady State Vltgs**					
23	Dorsey 500/Dorsey 230	0.999 / 1.045	0.999 / 1.045	0.999 / 1.045	0.999 / 1.045	0.999 / 1.045
24	Roseau 500/Forbes 500	1.018 / 0.993	1.018 / 0.993	1.018 / 0.993	1.018 / 0.993	1.018 / 0.993
25	Chisago 500/EauClaire 345	1.002 / 1.002	1.002 / 1.002	1.002 / 1.002	1.002 / 1.002	1.002 / 1.002
26	Int Falls 115/Badoura 115	1.021 / 1.009	1.021 / 1.009	1.021 / 1.009	1.021 / 1.009	1.021 / 1.009
27	Drayton 230/Groton 345	1.018 / 1.012	1.018 / 1.012	1.018 / 1.012	1.018 / 1.012	1.018 / 1.012
28	**SS OS Relay Margins**					
29	D602F at Forbes/Dorsey	205% / 319%	205% / 319%	205% / 319%	205% / 319%	205% / 319%
30	82R at Rugby/L20D at Drayton	999% / 872%	999% / 872%	999% / 872%	999% / 872%	999% / 872%
31	R50M/F3M	781% / 325%	781% / 325%	781% / 325%	781% / 325%	781% / 325%
32	B10T	331%	331%	331%	331%	331%
33	**Min/MaxTransientVltg**					
34	Arrowhd 230	0.93 | 1.01	0.97 | 1.01	0.94 | 1.01	0.95 | 1.01	0.92 | 1.01
35	Boise 115	0.99 | 1.06	1.00 | 1.03	1.00 | 1.05	1.00 | 1.04	0.99 | 1.07
36	Dorsey 230	1.03 | 1.06	1.03 | 1.06	1.02 | 1.06	1.03 | 1.06	1.01 | 1.07
37	Forbes 230	0.97 | 1.04	0.99 | 1.01	0.97 | 1.02	0.98 | 1.02	0.97 | 1.03
38	Riverton 230	0.90 | 1.06	0.99 | 1.03	0.92 | 1.05	0.94 | 1.04	0.88 | 1.06
39	Coal Creek 230	1.01 | 1.11	0.96 | 1.10	0.93 | 1.13	0.94 | 1.13	1.01 | 1.10
40	Jamestown 345	0.72 | 1.04	0.94 | 1.04	0.72 | 1.04	0.76 | 1.03	(0.61)0.67 | 1.07
41	Drayton 230	0.97 | 1.12	0.98 | 1.07	0.98 | 1.13	0.99 | 1.12	0.95 | 1.14
42	Groton 345	0.84 | 1.11	0.94 | 1.02	0.89 | 1.08	0.92 | 1.06	0.75 | 1.12
43	Minong 161	0.99 | 1.05	1.01 | 1.04	0.99 | 1.05	0.99 | 1.05	0.98 | 1.06
44	Wahpeton 115	0.83 | 1.10	0.97 | 1.05	0.87 | 1.09	0.90 | 1.08	(0.61)0.79 | 1.12
45	Watertown 345	0.90 | 1.09	0.98 | 1.03	0.94 | 1.07	0.96 | 1.05	0.83 | 1.11
46	**Dynamic Voltage Warnings**					
47		none	none		none	63369 [JAMESTN3] 0.67
48						63198 [BUFFALOY] 0.68
49						63358 [BUFFALO3] 0.68
50						63199 [JAMSTN1Y] 0.69
51						63200 [JAMSTN2Y] 0.69
52						
53						
54	Worst Case Angle Damping					
55	Dorsey SUVP / UdHold	/ 0.150		/ 0.175	/ 0.175	/ 0.150
56	Forbes DC Red (DCAR)	311%	416%	376%	404%	249%
57	K22W (max +dP @ t, d-ang)	20.5@(2.78332,-0.2)	10.0@(2.49166,-1.9)	17.2@(2.59999,-1.9)	13.6@(2.55832,-0.5)	30.2@(3.04165,0.1)
58	K22W (max -dP @ t, d-ang)	26.1@(0.90833,5.0)	8.4@(0.80833,2.0)	25.6@(0.72500,4.1)	19.8@(0.67500,3.1)	37.3@(1.04166,7.7)
59	K22W (max d-ang @ t, dP)	7.9@(1.22500,-10.8)	2.8@(1.07500,-4.8)	7.2@(1.06666,-13.2)	6.2@(1.02500,-8.2)	14.1@(1.40000,-16.6)
60	**OS Rel Trip / Marg**					
61	MH - OH					
62	D602F at Forbes/Dorsey	150% / 228%	172% / 265%	159% / 243%	163% / 249%	145% / 220%
63	82R at Rugby/L20D at Drayton	999% / 562%	999% / 621%	999% / 636%	999% / 680%	999% / 432%
64	R50M / F3M	595% / 253%	678% / 285%	611% / 264%	619% / 267%	614% / 252%
65	B10T	110%	281%	139%	169%	73%
66	**FSCAPS (SS/Unav/Final)**					
67	Balta 230	(0 | 3 | 0)	(0 | 1 | 0)	(0 | 3 | 0)	(0 | 2 | 0)	(0 | 1 | 0)
68	Eau Cl 345 / Park Lk 115	(3 | 3 | 3) / (0 | 0 | 0)	(3 | 3 | 3) / (0 | 0 | 0)	(3 | 3 | 3) / (0 | 0 | 0)	(3 | 3 | 3) / (0 | 0 | 0)	(3 | 3 | 3) / (0 | 0 | 0)
69	Prairie 115 / Ramsey 230	(1 | 9 | 2) / (0 | 2 | 0)	(1 | 4 | 3) / (0 | 2 | 1)	(1 | 5 | 1) / (0 | 2 | 0)	(1 | 4 | 1) / (0 | 2 | 1)	(1 |12 | 1) / (0 | 2 | 0)
70	Roseau 230 / Running 230	(0 | 1 | 1) / (1 | 2 | 1)	(0 | 0 | 0) / (1 | 1 | 1)	(0 | 0 | 0) / (1 | 2 | 2)	(0 | 0 | 0) / (1 | 1 | 1)	(0 | 1 | 0) / (1 | 3 | 1)
71	Shey 115 / Split Rock 115	(2 | 5 | 2) / (1 | 2 | 2)	(2 | 4 | 4) / (1 | 1 | 1)	(2 | 5 | 3) / (1 | 2 | 2)	(2 | 5 | 3) / (1 | 1 | 1)	(2 | 5 | 1) / (1 | 2 | 2)
72	**Damping Performance**	N/A	N/A	N/A	N/A	N/A

Appendix E.3 - Simulation Summary Tables Without GI-0616 and GI-0707A and Without GI-0619 (Case b12)

1	**Case No.**	11	12	13	14	15
2	**Case Name**	b12-so11aa-ef9	b12-so11aa-ei2	b12-so11aa-el3	b12-so11aa-eq1	b12-so11aa-evs
3	**Disturbance**	ef9	ei2	el3	eq1	evs
4	**Prior Outage**	None	None	None	None	None
5	**Date/Time**	OCT 29 2008 14:29	OCT 29 2008 14:33	OCT 29 2008 14:31	OCT 29 2008 15:02	OCT 29 2008 14:35
6	**Comments**					
7						
8	**Steady State Flows**					
9	NDEX / EAST BIAS	2079 / 362	2079 / 362	2079 / 362	2079 / 362	2079 / 362
10	MHEX / L20D	2173 / 235	2173 / 235	2173 / 235	2173 / 235	2173 / 235
11	ECL-ARP / PRI-BYN	550 / 694	550 / 694	550 / 694	550 / 694	550 / 694
12	MWEX / AHD-SLK	1524 / 664	1524 / 664	1524 / 664	1524 / 664	1524 / 664
13	D602F / F601C	1807 / 1565	1807 / 1565	1807 / 1565	1807 / 1565	1807 / 1565
14	B10T / MH>SPC	166 / 61	166 / 61	166 / 61	166 / 61	166 / 61
15	OH E-W / OH>MH	189 / -196	189 / -196	189 / -196	189 / -196	189 / -196
16	R50M / OH>MP	158 / 150	158 / 150	158 / 150	158 / 150	158 / 150
17	G82R	-27	-27	-27	-27	-27
18	Dorsey bipole / CU bipole	3243 / 1103	3243 / 1103	3243 / 1103	3243 / 1103	3243 / 1103
19	Dorsey Reserve / Wtrtn SVC	176 / 20	176 / 20	176 / 20	176 / 20	176 / 20
20	Forbes SVC / MSC	31 / 600	31 / 600	31 / 600	31 / 600	31 / 600
21	RCDC	0	0	0	0	0
22	**Steady State Vltgs**					
23	Dorsey 500/Dorsey 230	0.999 / 1.045	0.999 / 1.045	0.999 / 1.045	0.999 / 1.045	0.999 / 1.045
24	Roseau 500/Forbes 500	1.018 / 0.993	1.018 / 0.993	1.018 / 0.993	1.018 / 0.993	1.018 / 0.993
25	Chisago 500/EauClaire 345	1.002 / 1.002	1.002 / 1.002	1.002 / 1.002	1.002 / 1.002	1.002 / 1.002
26	Int Falls 115/Badoura 115	1.021 / 1.009	1.021 / 1.009	1.021 / 1.009	1.021 / 1.009	1.021 / 1.009
27	Drayton 230/Groton 345	1.018 / 1.012	1.018 / 1.012	1.018 / 1.012	1.018 / 1.012	1.018 / 1.012
28	**SS OS Relay Margins**					
29	D602F at Forbes/Dorsey	205% / 319%	205% / 319%	205% / 319%	205% / 319%	205% / 319%
30	82R at Rugby/L20D at Drayton	999% / 872%	999% / 872%	999% / 872%	999% / 872%	999% / 872%
31	R50M/F3M	781% / 325%	781% / 325%	781% / 325%	781% / 325%	781% / 325%
32	B10T	331%	331%	331%	331%	331%
33	**Min/MaxTransientVltg**					
34	Arrowhd 230	0.94 | 1.01	0.91 | 1.03	0.94 | 1.01	0.95 | 1.02	0.98 | 1.03
35	Boise 115	0.99 | 1.05	0.97 | 1.05	1.00 | 1.04	0.99 | 1.04	0.99 | 1.05
36	Dorsey 230	1.02 | 1.06	1.01 | 1.07	1.03 | 1.07	1.03 | 1.06	1.02 | 1.06
37	Forbes 230	0.98 | 1.03	0.93 | 1.02	0.98 | 1.02	0.97 | 1.01	0.98 | 1.02
38	Riverton 230	0.91 | 1.05	0.86 | 1.06	0.93 | 1.04	0.91 | 1.05	0.91 | 1.04
39	Coal Creek 230	1.01 | 1.09	1.00 | 1.13	0.94 | 1.13	0.98 | 1.16	0.94 | 1.12
40	Jamestown 345	0.73 | 1.05	0.77 | 1.04	0.77 | 1.03	0.80 | 1.03	0.75 | 1.00
41	Drayton 230	0.96 | 1.12	0.93 | 1.11	1.00 | 1.13	1.00 | 1.09	0.99 | 1.12
42	Groton 345	0.82 | 1.10	0.82 | 1.10	0.89 | 1.07	0.87 | 1.09	0.84 | 1.05
43	Minong 161	0.99 | 1.05	0.99 | 1.07	0.99 | 1.05	1.01 | 1.07	1.02 | 1.06
44	Wahpeton 115	0.84 | 1.11	0.81 | 1.10	0.89 | 1.08	0.87 | 1.08	0.84 | 1.06
45	Watertown 345	0.89 | 1.09	0.87 | 1.09	0.94 | 1.06	0.92 | 1.08	0.90 | 1.05
46	**Dynamic Voltage Warnings**					
47		none		none	none	
48						
49						
50						
51						
52						
53						
54	Worst Case Angle Damping					
55	Dorsey SUVP / UdHold	/ 0.150		/ 0.175		/ 0.166
56	Forbes DC Red (DCAR)	313%	507%	387%	507%	372%
57	K22W (max +dP @ t, d-ang)	19.9@(2.89998,-0.3)	68.8@(2.86665,-29.5)	20.1@(2.55832,-2.2)	40.2@(2.00000,-20.8)	19.1@(2.65832,-4.9)
58	K22W (max -dP @ t, d-ang)	27.1@(0.95000,4.6)	15.0@(0.70833,2.6)	20.9@(0.65833,3.2)	10.2@(0.64166,1.7)	29.3@(0.80833,4.4)
59	K22W (max d-ang @ t, dP)	8.8@(1.29166,-11.7)	-34.2@(2.31666,61.4)	6.6@(1.03333,-8.8)	-20.8@(2.00000,40.2)	7.8@(1.16666,-20.1)
60	**OS Rel Trip / Marg**					
61	MH - OH					
62	D602F at Forbes/Dorsey	159% / 243%	98% / 144%	160% / 245%	140% / 213%	141% / 214%
63	82R at Rugby/L20D at Drayton	999% / 519%	999% / 490%	999% / 663%	999% / 569%	999% / 683%
64	R50M / F3M	623% / 256%	528% / 207%	611% / 266%	620% / 241%	576% / 254%
65	B10T	115%	68%	155%	104%	178%
66	**FSCAPS (SS/Unav/Final)**					
67	Balta 230	(0 | 0 | 0)	(0 | 1 | 0)	(0 | 2 | 0)	(0 | 2 | 0)	(0 | 2 | 0)
68	Eau Cl 345 / Park Lk 115	(3 | 3 | 3) / (0 | 0 | 0)	(3 | 3 | 2) / (0 | 0 | 0)	(3 | 3 | 3) / (0 | 0 | 0)	(3 | 3 | 3) / (0 | 0 | 0)	(3 | 3 | 3) / (0 | 0 | 0)
69	Prairie 115 / Ramsey 230	(1 |10 | 2) / (0 | 1 | 0)	(1 | 8 | 1) / (0 | 2 | 1)	(1 | 5 | 1) / (0 | 2 | 1)	(1 | 5 | 1) / (0 | 1 | 1)	(1 | 6 | 1) / (0 | 2 | 1)
70	Roseau 230 / Running 230	(0 | 0 | 0) / (1 | 2 | 2)	(0 | 1 | 0) / (1 | 3 | 2)	(0 | 0 | 0) / (1 | 1 | 1)	(0 | 0 | 0) / (1 | 2 | 2)	(0 | 1 | 1) / (1 | 2 | 2)
71	Shey 115 / Split Rock 115	(2 | 5 | 2) / (1 | 2 | 2)	(2 | 5 | 2) / (1 | 2 | 2)	(2 | 5 | 3) / (1 | 2 | 2)	(2 | 5 | 3) / (1 | 2 | 2)	(2 | 5 | 5) / (1 | 2 | 2)
72	**Damping Performance**	N/A	N/A	N/A	N/A	N/A

Appendix E.3 - Simulation Summary Tables Without GI-0616 and GI-0707A and Without GI-0619 (Case b12)

1	**Case No.**	16	17	18	19	20
2	**Case Name**	b12-so11aa-fd1	b12-so11aa-fd3	b12-so11aa-fd4	b12-so11aa-fdk	b12-so11aa-fdl
3	**Disturbance**	fd1	fd3	fd4	fdk	fdl
4	**Prior Outage**	None	None	None	None	None
5	**Date/Time**	OCT 29 2008 15:03	OCT 29 2008 14:37	OCT 29 2008 15:06	OCT 29 2008 15:04	OCT 29 2008 15:07
6	**Comments**					
7						
8	**Steady State Flows**					
9	NDEX / EAST BIAS	2079 / 362	2079 / 362	2079 / 362	2079 / 362	2079 / 362
10	MHEX / L20D	2173 / 235	2173 / 235	2173 / 235	2173 / 235	2173 / 235
11	ECL-ARP / PRI-BYN	550 / 694	550 / 694	550 / 694	550 / 694	550 / 694
12	MWEX / AHD-SLK	1524 / 664	1524 / 664	1524 / 664	1524 / 664	1524 / 664
13	D602F / F601C	1807 / 1565	1807 / 1565	1807 / 1565	1807 / 1565	1807 / 1565
14	B10T / MH>SPC	166 / 61	166 / 61	166 / 61	166 / 61	166 / 61
15	OH E-W / OH>MH	189 / -196	189 / -196	189 / -196	189 / -196	189 / -196
16	R50M / OH>MP	158 / 150	158 / 150	158 / 150	158 / 150	158 / 150
17	G82R	-27	-27	-27	-27	-27
18	Dorsey bipole / CU bipole	3243 / 1103	3243 / 1103	3243 / 1103	3243 / 1103	3243 / 1103
19	Dorsey Reserve / Wtrtn SVC	176 / 20	176 / 20	176 / 20	176 / 20	176 / 20
20	Forbes SVC / MSC	31 / 600	31 / 600	31 / 600	31 / 600	31 / 600
21	RCDC	0	0	0	0	0
22	**Steady State Vltgs**					
23	Dorsey 500/Dorsey 230	0.999 / 1.045	0.999 / 1.045	0.999 / 1.045	0.999 / 1.045	0.999 / 1.045
24	Roseau 500/Forbes 500	1.018 / 0.993	1.018 / 0.993	1.018 / 0.993	1.018 / 0.993	1.018 / 0.993
25	Chisago 500/EauClaire 345	1.002 / 1.002	1.002 / 1.002	1.002 / 1.002	1.002 / 1.002	1.002 / 1.002
26	Int Falls 115/Badoura 115	1.021 / 1.009	1.021 / 1.009	1.021 / 1.009	1.021 / 1.009	1.021 / 1.009
27	Drayton 230/Groton 345	1.018 / 1.012	1.018 / 1.012	1.018 / 1.012	1.018 / 1.012	1.018 / 1.012
28	**SS OS Relay Margins**					
29	D602F at Forbes/Dorsey	205% / 319%	205% / 319%	205% / 319%	205% / 319%	205% / 319%
30	82R at Rugby/L20D at Drayton	999% / 872%	999% / 872%	999% / 872%	999% / 872%	999% / 872%
31	R50M/F3M	781% / 325%	781% / 325%	781% / 325%	781% / 325%	781% / 325%
32	B10T	331%	331%	331%	331%	331%
33	**Min/MaxTransientVltg**					
34	Arrowhd 230	0.97 | 1.03	0.92 | 1.01	0.93 | 1.01	1.00 | 1.04	0.95 | 1.02
35	Boise 115	0.99 | 1.04	0.99 | 1.05	0.99 | 1.05	1.00 | 1.03	1.00 | 1.03
36	Dorsey 230	1.02 | 1.06	1.02 | 1.06	1.02 | 1.06	1.03 | 1.06	1.03 | 1.06
37	Forbes 230	0.97 | 1.03	0.97 | 1.03	0.97 | 1.03	0.99 | 1.02	0.98 | 1.02
38	Riverton 230	0.92 | 1.06	0.90 | 1.06	0.92 | 1.07	0.98 | 1.05	0.97 | 1.06
39	Coal Creek 230	0.97 | 1.14	0.96 | 1.15	0.96 | 1.14	0.98 | 1.10	0.97 | 1.10
40	Jamestown 345	0.70 | 1.05	(0.48)0.67 | 1.05	(0.49)0.69 | 1.07	0.84 | 1.05	0.82 | 1.07
41	Drayton 230	0.98 | 1.11	0.98 | 1.12	0.98 | 1.12	1.00 | 1.07	1.00 | 1.10
42	Groton 345	0.88 | 1.08	0.84 | 1.10	0.88 | 1.09	0.96 | 1.07	0.96 | 1.09
43	Minong 161	1.01 | 1.06	0.97 | 1.05	0.98 | 1.05	1.04 | 1.08	1.01 | 1.06
44	Wahpeton 115	0.85 | 1.10	0.82 | 1.10	0.85 | 1.11	0.95 | 1.09	0.95 | 1.10
45	Watertown 345	0.92 | 1.07	0.90 | 1.08	0.93 | 1.08	0.99 | 1.06	0.99 | 1.07
46	**Dynamic Voltage Warnings**					
47		none	63369 [JAMESTN3] 0.67	63369 [JAMESTN3] 0.69	none	none
48			63199 [JAMSTN1Y] 0.68			
49			63200 [JAMSTN2Y] 0.68			
50			63198 [BUFFALOY] 0.69			
51			63358 [BUFFALO3] 0.69			
52						
53						
54	Worst Case Angle Damping					
55	Dorsey SUVP / UdHold		/ 0.166			
56	Forbes DC Red (DCAR)	334%	312%	324%	502%	495%
57	K22W (max +dP @ t, d-ang)	3.7@(0.14167,-0.2)	23.0@(2.70832,-2.8)	4.7@(1.43333,4.9)	35.1@(2.00000,-16.5)	36.7@(2.00000,-16.0)
58	K22W (max -dP @ t, d-ang)	22.9@(0.90000,4.1)	28.5@(0.84166,6.2)	21.2@(0.84166,4.2)	3.1@(0.31667,-0.2)	3.2@(0.32500,-0.2)
59	K22W (max d-ang @ t, dP)	7.0@(1.20833,-9.9)	9.9@(1.15833,-19.2)	7.5@(1.15833,-7.9)	-16.5@(1.98333,34.7)	-16.1@(1.95000,35.2)
60	**OS Rel Trip / Marg**					
61	MH - OH					
62	D602F at Forbes/Dorsey	143% / 217%	150% / 229%	157% / 241%	170% / 261%	169% / 260%
63	82R at Rugby/L20D at Drayton	999% / 653%	999% / 553%	999% / 587%	999% / 607%	999% / 536%
64	R50M / F3M	603% / 256%	609% / 264%	623% / 266%	634% / 248%	631% / 256%
65	B10T	153%	111%	126%	143%	116%
66	**FSCAPS (SS/Unav/Final)**					
67	Balta 230	(0 | 0 | 0)	(0 | 1 | 0)	(0 | 0 | 0)	(0 | 0 | 0)	(0 | 0 | 0)
68	Eau Cl 345 / Park Lk 115	(3 | 3 | 3) / (0 | 0 | 0)	(3 | 3 | 3) / (0 | 0 | 0)	(3 | 3 | 3) / (0 | 0 | 0)	(3 | 3 | 3) / (0 | 0 | 0)	(3 | 3 | 3) / (0 | 0 | 0)
69	Prairie 115 / Ramsey 230	(1 | 7 | 2) / (0 | 1 | 0)	(1 | 7 | 2) / (0 | 2 | 1)	(1 | 7 | 2) / (0 | 1 | 0)	(1 | 3 | 1) / (0 | 1 | 1)	(1 | 5 | 1) / (0 | 1 | 1)
70	Roseau 230 / Running 230	(0 | 1 | 1) / (1 | 2 | 2)	(0 | 0 | 0) / (1 | 2 | 2)	(0 | 1 | 1) / (1 | 2 | 2)	(0 | 0 | 0) / (1 | 1 | 1)	(0 | 0 | 0) / (1 | 1 | 1)
71	Shey 115 / Split Rock 115	(2 | 5 | 2) / (1 | 2 | 2)	(2 | 5 | 1) / (1 | 2 | 2)	(2 | 5 | 1) / (1 | 2 | 2)	(2 | 5 | 2) / (1 | 1 | 1)	(2 | 5 | 0) / (1 | 1 | 1)
72	**Damping Performance**	N/A	N/A	N/A	N/A	N/A

Appendix E.3 - Simulation Summary Tables Without GI-0616 and GI-0707A and Without GI-0619 (Case b12)

1	**Case No.**	21	22	23	24	25
2	**Case Name**	b12-so11aa-fds	b12-so11aa-nmz	b12-so11aa-pcs	b12-so11aa-pct	b12-so11aa-pys
3	**Disturbance**	fds	nmz	pcs	pct	pys
4	**Prior Outage**	None	None	None	None	None
5	**Date/Time**	OCT 29 2008 14:39	OCT 29 2008 14:42	OCT 29 2008 14:44	OCT 29 2008 14:49	OCT 29 2008 14:52
6	**Comments**					
7						
8	**Steady State Flows**					
9	NDEX / EAST BIAS	2079 / 362	2079 / 362	2079 / 362	2079 / 362	2079 / 362
10	MHEX / L20D	2173 / 235	2173 / 235	2173 / 235	2173 / 235	2173 / 235
11	ECL-ARP / PRI-BYN	550 / 694	550 / 694	550 / 694	550 / 694	550 / 694
12	MWEX / AHD-SLK	1524 / 664	1524 / 664	1524 / 664	1524 / 664	1524 / 664
13	D602F / F601C	1807 / 1565	1807 / 1565	1807 / 1565	1807 / 1565	1807 / 1565
14	B10T / MH>SPC	166 / 61	166 / 61	166 / 61	166 / 61	166 / 61
15	OH E-W / OH>MH	189 / -196	189 / -196	189 / -196	189 / -196	189 / -196
16	R50M / OH>MP	158 / 150	158 / 150	158 / 150	158 / 150	158 / 150
17	G82R	-27	-27	-27	-27	-27
18	Dorsey bipole / CU bipole	3243 / 1103	3243 / 1103	3243 / 1103	3243 / 1103	3243 / 1103
19	Dorsey Reserve / Wtrtn SVC	176 / 20	176 / 20	176 / 20	176 / 20	176 / 20
20	Forbes SVC / MSC	31 / 600	31 / 600	31 / 600	31 / 600	31 / 600
21	RCDC	0	0	0	0	0
22	**Steady State Vltgs**					
23	Dorsey 500/Dorsey 230	0.999 / 1.045	0.999 / 1.045	0.999 / 1.045	0.999 / 1.045	0.999 / 1.045
24	Roseau 500/Forbes 500	1.018 / 0.993	1.018 / 0.993	1.018 / 0.993	1.018 / 0.993	1.018 / 0.993
25	Chisago 500/EauClaire 345	1.002 / 1.002	1.002 / 1.002	1.002 / 1.002	1.002 / 1.002	1.002 / 1.002
26	Int Falls 115/Badoura 115	1.021 / 1.009	1.021 / 1.009	1.021 / 1.009	1.021 / 1.009	1.021 / 1.009
27	Drayton 230/Groton 345	1.018 / 1.012	1.018 / 1.012	1.018 / 1.012	1.018 / 1.012	1.018 / 1.012
28	**SS OS Relay Margins**					
29	D602F at Forbes/Dorsey	205% / 319%	205% / 319%	205% / 319%	205% / 319%	205% / 319%
30	82R at Rugby/L20D at Drayton	999% / 872%	999% / 872%	999% / 872%	999% / 872%	999% / 872%
31	R50M/F3M	781% / 325%	781% / 325%	781% / 325%	781% / 325%	781% / 325%
32	B10T	331%	331%	331%	331%	331%
33	**Min/MaxTransientVltg**					
34	Arrowhd 230	0.93 | 1.01	0.91 | 1.05	0.83 | 0.95	0.91 | 0.94	0.95 | 0.99
35	Boise 115	1.00 | 1.05	0.93 | 1.05	1.00 | 1.07	1.02 | 1.03	0.99 | 1.05
36	Dorsey 230	1.03 | 1.06	1.04 | 1.18	1.02 | 1.09	1.04 | 1.05	1.02 | 1.08
37	Forbes 230	0.97 | 1.02	0.97 | 1.03	0.98 | 1.03	0.99 | 1.00	0.99 | 1.04
38	Riverton 230	0.92 | 1.05	0.87 | 1.04	0.97 | 1.02	1.00 | 1.01	1.00 | 1.02
39	Coal Creek 230	0.96 | 1.13	0.94 | 1.10	0.97 | 1.07	1.02 | 1.05	0.98 | 1.08
40	Jamestown 345	0.74 | 1.05	0.80 | 1.02	0.90 | 1.00	0.96 | 0.97	0.91 | 0.99
41	Drayton 230	0.98 | 1.11	0.97 | 1.08	1.01 | 1.06	1.01 | 1.03	1.00 | 1.04
42	Groton 345	0.88 | 1.08	0.85 | 1.06	0.96 | 1.02	1.00 | 1.02	0.97 | 1.02
43	Minong 161	0.98 | 1.05	0.98 | 1.09	0.83 | 0.99	0.94 | 0.97	0.97 | 1.03
44	Wahpeton 115	0.86 | 1.09	0.83 | 1.07	0.98 | 1.05	1.01 | 1.03	0.99 | 1.04
45	Watertown 345	0.93 | 1.07	0.89 | 1.05	0.99 | 1.03	1.02 | 1.03	1.00 | 1.03
46	**Dynamic Voltage Warnings**					
47		none	none	none	none	none
48						
49						
50						
51						
52						
53						
54	Worst Case Angle Damping			SHERC3 / 71.25%	SHERC3 / 58.91%	SHERC3 / 79.54%
55	Dorsey SUVP / UdHold	/ 0.166	/ 0.133			
56	Forbes DC Red (DCAR)	362%	507%	83%	296%	152%
57	K22W (max +dP @ t, d-ang)	18.2@(2.65832,-2.3)	129.7@(2.66665,-55.9)	5.4@(3.54997,1.7)	0.0@(0.10000,0.0)	10.2@(2.53332,0.2)
58	K22W (max -dP @ t, d-ang)	19.2@(0.73333,3.8)	90.1@(0.23333,7.1)	54.3@(1.50833,21.2)	32.8@(2.14166,13.2)	35.0@(1.71666,7.3)
59	K22W (max d-ang @ t, dP)	7.6@(1.09166,-12.1)	-58.0@(2.39166,123.6)	25.2@(1.13333,-52.1)	13.2@(2.14166,-32.8)	17.7@(1.08333,-28.8)
60	**OS Rel Trip / Marg**					
61	MH - OH					
62	D602F at Forbes/Dorsey	161% / 246%	0.18333 sec / 0.18333 sec	154% / 233%	205% / 319%	147% / 221%
63	82R at Rugby/L20D at Drayton	999% / 618%	999% / 542%	999% / 582%	999% / 781%	999% / 644%
64	R50M / F3M	615% / 266%	338% / 146%	550% / 325%	719% / 325%	580% / 299%
65	B10T	145%	124%	121%	281%	174%
66	**FSCAPS (SS/Unav/Final)**					
67	Balta 230	(0 | 1 | 0)	(0 | 1 | 0)	(0 | 0 | 0)	(0 | 0 | 0)	(0 | 0 | 0)
68	Eau Cl 345 / Park Lk 115	(3 | 3 | 3) / (0 | 0 | 0)	(3 | 3 | 1) / (0 | 0 | 0)	(3 | 4 | 3) / (0 | 3 | 3)	(3 | 3 | 3) / (0 | 0 | 0)	(3 | 4 | 4) / (0 | 3 | 3)
69	Prairie 115 / Ramsey 230	(1 | 6 | 2) / (0 | 2 | 1)	(1 | 4 | 1) / (0 | 1 | 1)	(1 | 3 | 2) / (0 | 1 | 1)	(1 | 1 | 1) / (0 | 0 | 0)	(1 | 1 | 1) / (0 | 1 | 1)
70	Roseau 230 / Running 230	(0 | 0 | 0) / (1 | 2 | 2)	(0 | 1 | 0) / (1 | 4 | 2)	(0 | 1 | 1) / (1 | 2 | 2)	(0 | 0 | 0) / (1 | 1 | 1)	(0 | 1 | 1) / (1 | 2 | 2)
71	Shey 115 / Split Rock 115	(2 | 5 | 2) / (1 | 2 | 2)	(2 | 5 | 3) / (1 | 2 | 2)	(2 | 3 | 3) / (1 | 1 | 1)	(2 | 2 | 2) / (1 | 1 | 1)	(2 | 3 | 3) / (1 | 1 | 1)
72	**Damping Performance**	N/A	N/A	N/A	N/A	N/A

Appendix E.3 - Simulation Summary Tables Without GI-0616 and GI-0707A and Without GI-0619 (Case b12)

1	**Case No.**	26	27	28
2	**Case Name**	b12-so11aa-pyt	b12-so11aa-ya3	b12-so11aa-yas
3	**Disturbance**	pyt	ya3	yas
4	**Prior Outage**	None	None	None
5	**Date/Time**	OCT 29 2008 14:56	OCT 29 2008 14:41	OCT 29 2008 15:09
6	**Comments**			
7				
8	**Steady State Flows**			
9	NDEX / EAST BIAS	2079 / 362	2079 / 362	2079 / 362
10	MHEX / L20D	2173 / 235	2173 / 235	2173 / 235
11	ECL-ARP / PRI-BYN	550 / 694	550 / 694	550 / 694
12	MWEX / AHD-SLK	1524 / 664	1524 / 664	1524 / 664
13	D602F / F601C	1807 / 1565	1807 / 1565	1807 / 1565
14	B10T / MH>SPC	166 / 61	166 / 61	166 / 61
15	OH E-W / OH>MH	189 / -196	189 / -196	189 / -196
16	R50M / OH>MP	158 / 150	158 / 150	158 / 150
17	G82R	-27	-27	-27
18	Dorsey bipole / CU bipole	3243 / 1103	3243 / 1103	3243 / 1103
19	Dorsey Reserve / Wtrtn SVC	176 / 20	176 / 20	176 / 20
20	Forbes SVC / MSC	31 / 600	31 / 600	31 / 600
21	RCDC	0	0	0
22	**Steady State Vltgs**			
23	Dorsey 500/Dorsey 230	0.999 / 1.045	0.999 / 1.045	0.999 / 1.045
24	Roseau 500/Forbes 500	1.018 / 0.993	1.018 / 0.993	1.018 / 0.993
25	Chisago 500/EauClaire 345	1.002 / 1.002	1.002 / 1.002	1.002 / 1.002
26	Int Falls 115/Badoura 115	1.021 / 1.009	1.021 / 1.009	1.021 / 1.009
27	Drayton 230/Groton 345	1.018 / 1.012	1.018 / 1.012	1.018 / 1.012
28	**SS OS Relay Margins**			
29	D602F at Forbes/Dorsey	205% / 319%	205% / 319%	205% / 319%
30	82R at Rugby/L20D at Drayton	999% / 872%	999% / 872%	999% / 872%
31	R50M/F3M	781% / 325%	781% / 325%	781% / 325%
32	B10T	331%	331%	331%
33	**Min/MaxTransientVltg**			
34	Arrowhd 230	0.97 | 0.99	0.99 | 1.00	0.91 | 0.98
35	Boise 115	1.02 | 1.03	1.02 | 1.05	1.03 | 1.06
36	Dorsey 230	1.04 | 1.05	1.04 | 1.05	1.04 | 1.07
37	Forbes 230	1.00 | 1.01	0.99 | 1.01	0.99 | 1.02
38	Riverton 230	1.00 | 1.02	0.99 | 1.01	0.97 | 1.02
39	Coal Creek 230	1.02 | 1.05	1.02 | 1.05	0.99 | 1.06
40	Jamestown 345	0.96 | 0.97	0.96 | 0.98	0.94 | 0.98
41	Drayton 230	1.01 | 1.03	1.01 | 1.03	1.01 | 1.03
42	Groton 345	1.00 | 1.02	1.00 | 1.01	1.00 | 1.01
43	Minong 161	1.00 | 1.02	0.97 | 1.01	1.02 | 1.10
44	Wahpeton 115	1.02 | 1.03	1.01 | 1.03	1.00 | 1.03
45	Watertown 345	1.02 | 1.02	1.01 | 1.02	1.01 | 1.02
46	**Dynamic Voltage Warnings**			
47		none	none	39449] 1.25
48				
49				
50				
51				
52				
53				
54	Worst Case Angle Damping	SHERC3 / 60.95%		
55	Dorsey SUVP / UdHold			
56	Forbes DC Red (DCAR)	354%	396%	391%
57	K22W (max +dP @ t, d-ang)	0.0@(0.10000,0.0)	3.9@(0.11667,0.8)	2.5@(0.11667,0.4)
58	K22W (max -dP @ t, d-ang)	20.7@(1.84166,7.8)	25.1@(1.70000,10.9)	24.5@(1.25833,9.3)
59	K22W (max d-ang @ t, dP)	8.3@(2.22499,-19.0)	11.0@(1.94166,-22.9)	9.3@(1.20833,-24.3)
60	**OS Rel Trip / Marg**			
61	MH - OH			
62	D602F at Forbes/Dorsey	205% / 319%	203% / 316%	186% / 288%
63	82R at Rugby/L20D at Drayton	999% / 800%	999% / 753%	999% / 750%
64	R50M / F3M	762% / 325%	781% / 325%	743% / 325%
65	B10T	285%	264%	254%
66	**FSCAPS (SS/Unav/Final)**			
67	Balta 230	(0 | 0 | 0)	(0 | 0 | 0)	(0 | 0 | 0)
68	Eau Cl 345 / Park Lk 115	(3 | 3 | 3) / (0 | 0 | 0)	(3 | 4 | 4) / (0 | 0 | 0)	(3 | 4 | 4) / (0 | 0 | 0)
69	Prairie 115 / Ramsey 230	(1 | 1 | 1) / (0 | 0 | 0)	(1 | 1 | 1) / (0 | 0 | 0)	(1 | 1 | 1) / (0 | 0 | 0)
70	Roseau 230 / Running 230	(0 | 0 | 0) / (1 | 1 | 1)	(0 | 0 | 0) / (1 | 1 | 1)	(0 | 0 | 0) / (1 | 2 | 2)
71	Shey 115 / Split Rock 115	(2 | 2 | 2) / (1 | 1 | 1)	(2 | 2 | 2) / (1 | 1 | 1)	(2 | 2 | 2) / (1 | 1 | 1)
72	**Damping Performance**	N/A	N/A	N/A

Appendix E.4 - Simulation Summary Tables With GI-0616 and GI-0707A, Without GI-0619 (Case b14)

1	**Case No.**	1	2	3	4	5
2	**Case Name**	b14-so11aa-zss	b14-so11aa-ac3	b14-so11aa-ad3	b14-so11aa-ag1	b14-so11aa-ag3
3	**Disturbance**	zss	ac3	ad3	ag1	ag3
4	**Prior Outage**	None	None	None	None	None
5	**Date/Time**	OCT 29 2008 15:16	OCT 29 2008 15:18	OCT 29 2008 15:20	OCT 29 2008 16:19	OCT 29 2008 15:22
6	**Comments**					
7						
8	**Steady State Flows**					
9	NDEX / EAST BIAS	2079 / 348	2079 / 348	2079 / 348	2079 / 348	2079 / 348
10	MHEX / L20D	2174 / 236	2174 / 236	2174 / 236	2174 / 236	2174 / 236
11	ECL-ARP / PRI-BYN	550 / 693	550 / 693	550 / 693	550 / 693	550 / 693
12	MWEX / AHD-SLK	1525 / 664	1525 / 664	1525 / 664	1525 / 664	1525 / 664
13	D602F / F601C	1814 / 1564	1814 / 1564	1814 / 1564	1814 / 1564	1814 / 1564
14	B10T / MH>SPC	166 / 62	166 / 62	166 / 62	166 / 62	166 / 62
15	OH E-W / OH>MH	189 / -196	189 / -196	189 / -196	189 / -196	189 / -196
16	R50M / OH>MP	159 / 150	159 / 150	159 / 150	159 / 150	159 / 150
17	G82R	-36	-36	-36	-36	-36
18	Dorsey bipole / CU bipole	3245 / 1104	3245 / 1104	3245 / 1104	3245 / 1104	3245 / 1104
19	Dorsey Reserve / Wtrtn SVC	159 / 70	159 / 70	159 / 70	159 / 70	159 / 70
20	Forbes SVC / MSC	32 / 600	32 / 600	32 / 600	32 / 600	32 / 600
21	RCDC	0	0	0	0	0
22	**Steady State Vltgs**					
23	Dorsey 500/Dorsey 230	0.999 / 1.045	0.999 / 1.045	0.999 / 1.045	0.999 / 1.045	0.999 / 1.045
24	Roseau 500/Forbes 500	1.013 / 0.992	1.013 / 0.992	1.013 / 0.992	1.013 / 0.992	1.013 / 0.992
25	Chisago 500/EauClaire 345	1.001 / 1.002	1.001 / 1.002	1.001 / 1.002	1.001 / 1.002	1.001 / 1.002
26	Int Falls 115/Badoura 115	1.020 / 1.012	1.020 / 1.012	1.020 / 1.012	1.020 / 1.012	1.020 / 1.012
27	Drayton 230/Groton 345	1.013 / 0.991	1.013 / 0.991	1.013 / 0.991	1.013 / 0.991	1.013 / 0.991
28	**SS OS Relay Margins**					
29	D602F at Forbes/Dorsey	202% / 314%	202% / 314%	202% / 314%	202% / 314%	202% / 314%
30	82R at Rugby/L20D at Drayton	999% / 854%	999% / 854%	999% / 854%	999% / 854%	999% / 854%
31	R50M/F3M	770% / 325%	770% / 325%	770% / 325%	770% / 325%	770% / 325%
32	B10T	331%	331%	331%	331%	331%
33	**Min/MaxTransientVltg**					
34	Arrowhd 230	0.99 | 0.99	0.95 | 1.00	0.96 | 1.01	0.95 | 1.00	0.95 | 1.00
35	Boise 115	1.02 | 1.02	0.99 | 1.05	1.00 | 1.03	0.99 | 1.05	0.99 | 1.04
36	Dorsey 230	1.04 | 1.04	1.02 | 1.05	1.03 | 1.06	1.02 | 1.06	1.02 | 1.05
37	Forbes 230	1.00 | 1.00	0.98 | 1.02	0.98 | 1.02	0.98 | 1.02	0.98 | 1.01
38	Riverton 230	1.01 | 1.01	0.95 | 1.03	0.97 | 1.05	0.95 | 1.04	0.95 | 1.03
39	Coal Creek 230	1.03 | 1.03	0.94 | 1.12	0.96 | 1.12	0.95 | 1.12	0.95 | 1.12
40	Jamestown 345	0.95 | 0.95	0.81 | 1.00	0.87 | 1.03	0.82 | 1.02	0.82 | 1.00
41	Drayton 230	1.01 | 1.01	0.98 | 1.10	0.99 | 1.10	0.98 | 1.10	0.99 | 1.10
42	Groton 345	0.99 | 0.99	0.75 | 1.00	0.80 | 1.03	0.74 | 1.01	0.77 | 0.99
43	Minong 161	1.03 | 1.03	1.00 | 1.04	1.01 | 1.05	1.00 | 1.04	1.00 | 1.04
44	Wahpeton 115	1.01 | 1.01	0.89 | 1.05	0.93 | 1.08	0.90 | 1.06	0.90 | 1.05
45	Watertown 345	1.02 | 1.02	0.90 | 1.03	0.91 | 1.04	0.89 | 1.03	0.90 | 1.03
46	**Dynamic Voltage Warnings**					
47		none	67616 [GI-06163] 0.68	none	67616 [GI-06163] 0.68	none
48						
49						
50						
51						
52						
53						
54	Worst Case Angle Damping					
55	Dorsey SUVP / UdHold					
56	Forbes DC Red (DCAR)	504%	399%	378%	405%	410%
57	K22W (max +dP @ t, d-ang)	0.0@(0.19167,0.0)	15.1@(2.68332,-2.3)	17.6@(2.53332,-2.1)	2.2@(0.14167,-0.1)	15.6@(2.63332,-1.7)
58	K22W (max -dP @ t, d-ang)	0.6@(4.85829,0.3)	28.6@(0.90000,8.6)	16.8@(0.78333,4.6)	28.0@(0.91666,8.2)	27.4@(0.88333,8.5)
59	K22W (max d-ang @ t, dP)	0.3@(4.99995,-0.5)	11.2@(1.18333,-17.7)	6.3@(1.05000,-7.7)	10.6@(1.18333,-14.6)	10.6@(1.14166,-16.2)
60	**OS Rel Trip / Marg**					
61	MH - OH					
62	D602F at Forbes/Dorsey	202% / 314%	137% / 206%	161% / 246%	140% / 211%	140% / 210%
63	82R at Rugby/L20D at Drayton	999% / 853%	999% / 637%	999% / 652%	999% / 630%	999% / 645%
64	R50M / F3M	770% / 325%	580% / 268%	650% / 275%	590% / 266%	589% / 269%
65	B10T	331%	182%	171%	171%	181%
66	**FSCAPS (SS/Unav/Final)**					
67	Balta 230	(0 | 0 | 0)	(0 | 1 | 0)	(0 | 1 | 0)	(0 | 1 | 0)	(0 | 1 | 0)
68	Eau Cl 345 / Park Lk 115	(3 | 3 | 3) / (0 | 0 | 0)	(3 | 3 | 3) / (0 | 0 | 0)	(3 | 3 | 3) / (0 | 0 | 0)	(3 | 3 | 3) / (0 | 0 | 0)	(3 | 3 | 3) / (0 | 0 | 0)
69	Prairie 115 / Ramsey 230	(1 | 1 | 1) / (0 | 0 | 0)	(1 | 6 | 2) / (0 | 2 | 1)	(1 | 3 | 1) / (0 | 2 | 1)	(1 | 6 | 2) / (0 | 2 | 1)	(1 | 5 | 2) / (0 | 2 | 1)
70	Roseau 230 / Running 230	(0 | 0 | 0) / (1 | 1 | 1)	(0 | 1 | 1) / (1 | 2 | 2)	(0 | 0 | 0) / (1 | 1 | 1)	(0 | 1 | 1) / (1 | 2 | 2)	(0 | 1 | 1) / (1 | 1 | 1)
71	Shey 115 / Split Rock 115	(2 | 2 | 2) / (1 | 1 | 1)	(2 | 5 | 5) / (1 | 1 | 1)	(2 | 5 | 3) / (1 | 1 | 1)	(2 | 5 | 4) / (1 | 1 | 1)	(2 | 5 | 5) / (1 | 2 | 2)
72	**Damping Performance**	N/A	N/A	N/A	N/A	N/A

Appendix E.4 - Simulation Summary Tables With GI-0616 and GI-0707A, Without GI-0619 (Case b14)

1	**Case No.**	6	7	8	9	10
2	**Case Name**	b14-so11aa-bl3	b14-so11aa-eb3	b14-so11aa-ec3	b14-so11aa-ecs	b14-so11aa-ef3
3	**Disturbance**	bl3	eb3	ec3	ecs	ef3
4	**Prior Outage**	None	None	None	None	None
5	**Date/Time**	OCT 29 2008 15:24	OCT 29 2008 15:27	OCT 29 2008 15:29	OCT 29 2008 15:32	OCT 29 2008 15:34
6	**Comments**					
7						
8	**Steady State Flows**					
9	NDEX / EAST BIAS	2079 / 348	2079 / 348	2079 / 348	2079 / 348	2079 / 348
10	MHEX / L20D	2174 / 236	2174 / 236	2174 / 236	2174 / 236	2174 / 236
11	ECL-ARP / PRI-BYN	550 / 693	550 / 693	550 / 693	550 / 693	550 / 693
12	MWEX / AHD-SLK	1525 / 664	1525 / 664	1525 / 664	1525 / 664	1525 / 664
13	D602F / F601C	1814 / 1564	1814 / 1564	1814 / 1564	1814 / 1564	1814 / 1564
14	B10T / MH>SPC	166 / 62	166 / 62	166 / 62	166 / 62	166 / 62
15	OH E-W / OH>MH	189 / -196	189 / -196	189 / -196	189 / -196	189 / -196
16	R50M / OH>MP	159 / 150	159 / 150	159 / 150	159 / 150	159 / 150
17	G82R	-36	-36	-36	-36	-36
18	Dorsey bipole / CU bipole	3245 / 1104	3245 / 1104	3245 / 1104	3245 / 1104	3245 / 1104
19	Dorsey Reserve / Wtrtn SVC	159 / 70	159 / 70	159 / 70	159 / 70	159 / 70
20	Forbes SVC / MSC	32 / 600	32 / 600	32 / 600	32 / 600	32 / 600
21	RCDC	0	0	0	0	0
22	**Steady State Vltgs**					
23	Dorsey 500/Dorsey 230	0.999 / 1.045	0.999 / 1.045	0.999 / 1.045	0.999 / 1.045	0.999 / 1.045
24	Roseau 500/Forbes 500	1.013 / 0.992	1.013 / 0.992	1.013 / 0.992	1.013 / 0.992	1.013 / 0.992
25	Chisago 500/EauClaire 345	1.001 / 1.002	1.001 / 1.002	1.001 / 1.002	1.001 / 1.002	1.001 / 1.002
26	Int Falls 115/Badoura 115	1.020 / 1.012	1.020 / 1.012	1.020 / 1.012	1.020 / 1.012	1.020 / 1.012
27	Drayton 230/Groton 345	1.013 / 0.991	1.013 / 0.991	1.013 / 0.991	1.013 / 0.991	1.013 / 0.991
28	**SS OS Relay Margins**					
29	D602F at Forbes/Dorsey	202% / 314%	202% / 314%	202% / 314%	202% / 314%	202% / 314%
30	82R at Rugby/L20D at Drayton	999% / 854%	999% / 854%	999% / 854%	999% / 854%	999% / 854%
31	R50M/F3M	770% / 325%	770% / 325%	770% / 325%	770% / 325%	770% / 325%
32	B10T	331%	331%	331%	331%	331%
33	**Min/MaxTransientVltg**					
34	Arrowhd 230	0.93 | 1.01	0.97 | 1.01	0.94 | 1.01	0.95 | 1.01	0.91 | 0.94
35	Boise 115	1.00 | 1.06	1.00 | 1.03	1.00 | 1.05	1.00 | 1.04	0.99 | 1.04
36	Dorsey 230	1.02 | 1.06	1.03 | 1.05	1.02 | 1.06	1.03 | 1.06	1.04 | 1.05
37	Forbes 230	0.97 | 1.03	0.99 | 1.01	0.97 | 1.03	0.98 | 1.02	0.97 | 0.99
38	Riverton 230	0.90 | 1.06	1.00 | 1.04	0.92 | 1.05	0.94 | 1.04	0.83 | 0.91
39	Coal Creek 230	1.01 | 1.10	0.96 | 1.10	0.93 | 1.13	0.94 | 1.13	1.01 | 1.06
40	Jamestown 345	(0.48)0.68 | 1.03	0.95 | 1.03	(0.48)0.69 | 1.02	0.74 | 1.02	(0.90)0.47 |
41	Drayton 230	0.96 | 1.11	0.99 | 1.06	0.98 | 1.14	0.99 | 1.12	0.86 | 0.97
42	Groton 345	0.73 | 1.08	0.91 | 0.99	0.86 | 1.04	0.89 | 1.03	(0.90)0.50 | 0.82
43	Minong 161	0.98 | 1.05	1.01 | 1.04	0.98 | 1.05	0.99 | 1.05	0.96 | 1.00
44	Wahpeton 115	0.80 | 1.10	0.97 | 1.05	0.86 | 1.08	0.89 | 1.07	(0.90)0.62 | 0.81
45	Watertown 345	0.84 | 1.08	0.96 | 1.02	0.92 | 1.05	0.94 | 1.04	(0.90)0.69 | 0.89
46	**Dynamic Voltage Warnings**					
47		63358 [BUFFALO3] 0.68	none	63369 [JAMESTN3] 0.69	none	63369 [JAMESTN3] 0.64
48		63369 [JAMESTN3] 0.68				63198 [BUFFALOY] 0.64
49		63198 [BUFFALOY] 0.69				63358 [BUFFALO3] 0.64
50						63258 [BUFFALO7] 0.66
51						63259 [ALICE 7] 0.66
52						63199 [JAMSTN1Y] 0.66
53						200 [JAMSTN2Y] 0.66 +m
54	Worst Case Angle Damping					
55	Dorsey SUVP / UdHold	/ 0.150		/ 0.175	/ 0.175	/ 0.150
56	Forbes DC Red (DCAR)	291%	414%	372%	402%	507%
57	K22W (max +dP @ t, d-ang)	27.5@(2.87498,-1.2)	10.4@(2.55832,-2.0)	21.2@(2.62499,-3.2)	15.3@(2.58332,-1.0)	11.6@(0.15000,-0.4)
58	K22W (max -dP @ t, d-ang)	31.0@(0.86666,4.8)	10.0@(0.84166,2.3)	27.0@(0.74166,4.5)	20.3@(0.69166,3.4)	18.4@(0.72500,0.7)
59	K22W (max d-ang @ t, dP)	10.6@(1.29166,-18.9)	3.3@(1.10833,-5.9)	7.9@(1.09166,-14.6)	6.6@(1.05000,-8.9)	-0.9@(0.51666,-5.2)
60	**OS Rel Trip / Marg**					
61	MH - OH					
62	D602F at Forbes/Dorsey	148% / 224%	168% / 258%	153% / 233%	160% / 245%	153% / 233%
63	82R at Rugby/L20D at Drayton	999% / 504%	999% / 605%	999% / 613%	999% / 661%	999% / 613%
64	R50M / F3M	585% / 252%	663% / 283%	599% / 263%	609% / 267%	604% / 251%
65	B10T	99%	274%	134%	167%	331%
66	**FSCAPS (SS/Unav/Final)**					
67	Balta 230	(0 | 3 | 0)	(0 | 1 | 0)	(0 | 3 | 0)	(0 | 2 | 0)	(0 | 3 | 3)
68	Eau Cl 345 / Park Lk 115	(3 | 3 | 3) / (0 | 0 | 0)	(3 | 3 | 3) / (0 | 0 | 0)	(3 | 3 | 3) / (0 | 0 | 0)	(3 | 3 | 3) / (0 | 0 | 0)	(3 | 3 | 3) / (0 | 0 | 0)
69	Prairie 115 / Ramsey 230	(1 |12 | 2) / (0 | 2 | 1)	(1 | 4 | 3) / (0 | 2 | 2)	(1 | 7 | 2) / (0 | 2 | 0)	(1 | 5 | 1) / (0 | 2 | 1)	(1 |12 | 7) / (0 | 2 | 2)
70	Roseau 230 / Running 230	(0 | 1 | 0) / (1 | 2 | 1)	(0 | 0 | 0) / (1 | 1 | 1)	(0 | 0 | 0) / (1 | 2 | 2)	(0 | 0 | 0) / (1 | 1 | 1)	(0 | 1 | 1) / (1 | 2 | 2)
71	Shey 115 / Split Rock 115	(2 | 5 | 2) / (1 | 2 | 2)	(2 | 4 | 4) / (1 | 1 | 1)	(2 | 5 | 4) / (1 | 2 | 2)	(2 | 5 | 4) / (1 | 1 | 1)	(2 | 5 | 5) / (1 | 2 | 2)
72	**Damping Performance**	N/A	N/A	N/A	N/A	N/A

Appendix E.4 - Simulation Summary Tables With GI-0616 and GI-0707A, Without GI-0619 (Case b14)

1	**Case No.**	11	12	13	14	15
2	**Case Name**	b14-so11aa-ef9	b14-so11aa-ei2	b14-so11aa-el3	b14-so11aa-eq1	b14-so11aa-evs
3	**Disturbance**	ef9	ei2	el3	eq1	evs
4	**Prior Outage**	None	None	None	None	None
5	**Date/Time**	OCT 29 2008 15:35	OCT 29 2008 15:39	OCT 29 2008 15:37	OCT 29 2008 16:20	OCT 29 2008 15:42
6	**Comments**					
7						
8	**Steady State Flows**					
9	NDEX / EAST BIAS	2079 / 348	2079 / 348	2079 / 348	2079 / 348	2079 / 348
10	MHEX / L20D	2174 / 236	2174 / 236	2174 / 236	2174 / 236	2174 / 236
11	ECL-ARP / PRI-BYN	550 / 693	550 / 693	550 / 693	550 / 693	550 / 693
12	MWEX / AHD-SLK	1525 / 664	1525 / 664	1525 / 664	1525 / 664	1525 / 664
13	D602F / F601C	1814 / 1564	1814 / 1564	1814 / 1564	1814 / 1564	1814 / 1564
14	B10T / MH>SPC	166 / 62	166 / 62	166 / 62	166 / 62	166 / 62
15	OH E-W / OH>MH	189 / -196	189 / -196	189 / -196	189 / -196	189 / -196
16	R50M / OH>MP	159 / 150	159 / 150	159 / 150	159 / 150	159 / 150
17	G82R	-36	-36	-36	-36	-36
18	Dorsey bipole / CU bipole	3245 / 1104	3245 / 1104	3245 / 1104	3245 / 1104	3245 / 1104
19	Dorsey Reserve / Wtrtn SVC	159 / 70	159 / 70	159 / 70	159 / 70	159 / 70
20	Forbes SVC / MSC	32 / 600	32 / 600	32 / 600	32 / 600	32 / 600
21	RCDC	0	0	0	0	0
22	**Steady State Vltgs**					
23	Dorsey 500/Dorsey 230	0.999 / 1.045	0.999 / 1.045	0.999 / 1.045	0.999 / 1.045	0.999 / 1.045
24	Roseau 500/Forbes 500	1.013 / 0.992	1.013 / 0.992	1.013 / 0.992	1.013 / 0.992	1.013 / 0.992
25	Chisago 500/EauClaire 345	1.001 / 1.002	1.001 / 1.002	1.001 / 1.002	1.001 / 1.002	1.001 / 1.002
26	Int Falls 115/Badoura 115	1.020 / 1.012	1.020 / 1.012	1.020 / 1.012	1.020 / 1.012	1.020 / 1.012
27	Drayton 230/Groton 345	1.013 / 0.991	1.013 / 0.991	1.013 / 0.991	1.013 / 0.991	1.013 / 0.991
28	**SS OS Relay Margins**					
29	D602F at Forbes/Dorsey	202% / 314%	202% / 314%	202% / 314%	202% / 314%	202% / 314%
30	82R at Rugby/L20D at Drayton	999% / 854%	999% / 854%	999% / 854%	999% / 854%	999% / 854%
31	R50M/F3M	770% / 325%	770% / 325%	770% / 325%	770% / 325%	770% / 325%
32	B10T	331%	331%	331%	331%	331%
33	**Min/MaxTransientVltg**					
34	Arrowhd 230	0.93 | 1.02	0.92 | 1.03	0.94 | 1.01	0.95 | 1.02	0.98 | 1.03
35	Boise 115	0.99 | 1.06	0.96 | 1.05	1.00 | 1.05	0.99 | 1.03	0.99 | 1.05
36	Dorsey 230	1.02 | 1.07	1.01 | 1.07	1.03 | 1.06	1.03 | 1.06	1.02 | 1.06
37	Forbes 230	0.98 | 1.02	0.92 | 1.02	0.98 | 1.02	0.97 | 1.01	0.97 | 1.02
38	Riverton 230	0.91 | 1.06	0.86 | 1.06	0.93 | 1.05	0.92 | 1.05	0.91 | 1.04
39	Coal Creek 230	1.01 | 1.08	0.99 | 1.13	0.94 | 1.13	0.98 | 1.16	0.94 | 1.12
40	Jamestown 345	(0.61)0.68 | 1.05	0.74 | 1.05	0.74 | 1.02	0.78 | 1.02	0.71 | 0.99
41	Drayton 230	0.96 | 1.12	0.92 | 1.11	0.99 | 1.12	0.99 | 1.09	0.96 | 1.12
42	Groton 345	0.72 | 1.07	0.71 | 1.06	0.87 | 1.04	0.84 | 1.05	0.75 | 1.01
43	Minong 161	0.98 | 1.06	0.99 | 1.07	0.99 | 1.05	1.01 | 1.07	1.01 | 1.06
44	Wahpeton 115	0.80 | 1.10	(0.61)0.78 | 1.10	0.88 | 1.08	0.86 | 1.08	0.81 | 1.04
45	Watertown 345	0.83 | 1.07	0.81 | 1.07	0.92 | 1.05	0.90 | 1.06	0.85 | 1.04
46	**Dynamic Voltage Warnings**					
47		63369 [JAMESTN3] 0.68	none	none	none	none
48		63358 [BUFFALO3] 0.69				
49		63198 [BUFFALOY] 0.69				
50						
51						
52						
53						
54	Worst Case Angle Damping					
55	Dorsey SUVP / UdHold	/ 0.150		/ 0.175		/ 0.166
56	Forbes DC Red (DCAR)	317%	507%	372%	507%	376%
57	K22W (max +dP @ t, d-ang)	32.7@(3.03331,-3.8)	72.6@(2.96665,-30.2)	19.6@(2.58332,-2.9)	39.9@(1.88333,-19.2)	24.8@(2.74165,-7.1)
58	K22W (max -dP @ t, d-ang)	33.0@(1.05833,7.1)	18.0@(0.95000,2.2)	23.6@(0.69166,3.6)	10.8@(0.66666,1.8)	32.8@(0.85833,5.6)
59	K22W (max d-ang @ t, dP)	12.0@(1.40833,-19.5)	-35.8@(2.44166,60.8)	6.6@(1.05000,-12.7)	-20.7@(2.00000,39.7)	10.0@(1.25000,-24.7)
60	**OS Rel Trip / Marg**					
61	MH - OH					
62	D602F at Forbes/Dorsey	157% / 240%	91% / 133%	157% / 240%	137% / 208%	133% / 199%
63	82R at Rugby/L20D at Drayton	999% / 468%	999% / 470%	999% / 651%	999% / 526%	999% / 636%
64	R50M / F3M	615% / 256%	505% / 203%	600% / 265%	609% / 239%	563% / 253%
65	B10T	88%	68%	151%	103%	182%
66	**FSCAPS (SS/Unav/Final)**					
67	Balta 230	(0 | 1 | 0)	(0 | 2 | 0)	(0 | 2 | 0)	(0 | 2 | 0)	(0 | 3 | 0)
68	Eau Cl 345 / Park Lk 115	(3 | 3 | 3) / (0 | 0 | 0)	(3 | 3 | 2) / (0 | 0 | 0)	(3 | 3 | 3) / (0 | 0 | 0)	(3 | 3 | 3) / (0 | 0 | 0)	(3 | 3 | 3) / (0 | 0 | 0)
69	Prairie 115 / Ramsey 230	(1 |10 | 2) / (0 | 2 | 1)	(1 |11 | 2) / (0 | 2 | 1)	(1 | 5 | 1) / (0 | 2 | 1)	(1 | 6 | 1) / (0 | 1 | 1)	(1 | 7 | 2) / (0 | 2 | 1)
70	Roseau 230 / Running 230	(0 | 1 | 0) / (1 | 2 | 1)	(0 | 2 | 1) / (1 | 3 | 2)	(0 | 0 | 0) / (1 | 2 | 2)	(0 | 0 | 0) / (1 | 2 | 2)	(0 | 1 | 1) / (1 | 2 | 2)
71	Shey 115 / Split Rock 115	(2 | 5 | 2) / (1 | 2 | 2)	(2 | 5 | 2) / (1 | 2 | 2)	(2 | 5 | 3) / (1 | 2 | 2)	(2 | 5 | 3) / (1 | 2 | 2)	(2 | 5 | 5) / (1 | 2 | 2)
72	**Damping Performance**	N/A	N/A	N/A	N/A	N/A

Appendix E.4 - Simulation Summary Tables With GI-0616 and GI-0707A, Without GI-0619 (Case b14)

1	**Case No.**	16	17	18	19	20
2	**Case Name**	b14-so11aa-fd1	b14-so11aa-fd3	b14-so11aa-fd4	b14-so11aa-fdk	b14-so11aa-fdl
3	**Disturbance**	fd1	fd3	fd4	fdk	fdl
4	**Prior Outage**	None	None	None	None	None
5	**Date/Time**	OCT 29 2008 16:22	OCT 29 2008 15:43	OCT 29 2008 16:25	OCT 29 2008 16:23	OCT 29 2008 16:26
6	**Comments**					
7						
8	**Steady State Flows**					
9	NDEX / EAST BIAS	2079 / 348	2079 / 348	2079 / 348	2079 / 348	2079 / 348
10	MHEX / L20D	2174 / 236	2174 / 236	2174 / 236	2174 / 236	2174 / 236
11	ECL-ARP / PRI-BYN	550 / 693	550 / 693	550 / 693	550 / 693	550 / 693
12	MWEX / AHD-SLK	1525 / 664	1525 / 664	1525 / 664	1525 / 664	1525 / 664
13	D602F / F601C	1814 / 1564	1814 / 1564	1814 / 1564	1814 / 1564	1814 / 1564
14	B10T / MH>SPC	166 / 62	166 / 62	166 / 62	166 / 62	166 / 62
15	OH E-W / OH>MH	189 / -196	189 / -196	189 / -196	189 / -196	189 / -196
16	R50M / OH>MP	159 / 150	159 / 150	159 / 150	159 / 150	159 / 150
17	G82R	-36	-36	-36	-36	-36
18	Dorsey bipole / CU bipole	3245 / 1104	3245 / 1104	3245 / 1104	3245 / 1104	3245 / 1104
19	Dorsey Reserve / Wtrtn SVC	159 / 70	159 / 70	159 / 70	159 / 70	159 / 70
20	Forbes SVC / MSC	32 / 600	32 / 600	32 / 600	32 / 600	32 / 600
21	RCDC	0	0	0	0	0
22	**Steady State Vltgs**					
23	Dorsey 500/Dorsey 230	0.999 / 1.045	0.999 / 1.045	0.999 / 1.045	0.999 / 1.045	0.999 / 1.045
24	Roseau 500/Forbes 500	1.013 / 0.992	1.013 / 0.992	1.013 / 0.992	1.013 / 0.992	1.013 / 0.992
25	Chisago 500/EauClaire 345	1.001 / 1.002	1.001 / 1.002	1.001 / 1.002	1.001 / 1.002	1.001 / 1.002
26	Int Falls 115/Badoura 115	1.020 / 1.012	1.020 / 1.012	1.020 / 1.012	1.020 / 1.012	1.020 / 1.012
27	Drayton 230/Groton 345	1.013 / 0.991	1.013 / 0.991	1.013 / 0.991	1.013 / 0.991	1.013 / 0.991
28	**SS OS Relay Margins**					
29	D602F at Forbes/Dorsey	202% / 314%	202% / 314%	202% / 314%	202% / 314%	202% / 314%
30	82R at Rugby/L20D at Drayton	999% / 854%	999% / 854%	999% / 854%	999% / 854%	999% / 854%
31	R50M/F3M	770% / 325%	770% / 325%	770% / 325%	770% / 325%	770% / 325%
32	B10T	331%	331%	331%	331%	331%
33	**Min/MaxTransientVltg**					
34	Arrowhd 230	0.97 | 1.03	0.92 | 1.01	0.92 | 1.01	0.99 | 1.04	0.94 | 1.02
35	Boise 115	0.98 | 1.04	0.99 | 1.06	0.99 | 1.05	1.00 | 1.03	1.00 | 1.03
36	Dorsey 230	1.01 | 1.06	1.01 | 1.06	1.02 | 1.06	1.03 | 1.06	1.03 | 1.06
37	Forbes 230	0.97 | 1.03	0.97 | 1.03	0.97 | 1.03	0.99 | 1.02	0.98 | 1.02
38	Riverton 230	0.92 | 1.06	0.90 | 1.07	0.92 | 1.07	0.98 | 1.06	0.97 | 1.06
39	Coal Creek 230	0.97 | 1.14	0.96 | 1.15	0.96 | 1.14	0.98 | 1.10	0.97 | 1.11
40	Jamestown 345	(0.55)0.66 | 1.04	(0.48)0.63 | 1.05	(0.54)0.66 | 1.07	0.82 | 1.05	0.79 | 1.07
41	Drayton 230	0.96 | 1.13	0.96 | 1.12	0.97 | 1.13	1.00 | 1.07	0.99 | 1.10
42	Groton 345	0.85 | 1.04	0.76 | 1.06	0.86 | 1.06	0.93 | 1.04	0.93 | 1.06
43	Minong 161	1.01 | 1.06	0.97 | 1.05	0.98 | 1.05	1.04 | 1.08	1.00 | 1.06
44	Wahpeton 115	0.82 | 1.09	(0.48)0.79 | 1.10	0.83 | 1.11	0.93 | 1.09	0.93 | 1.11
45	Watertown 345	0.90 | 1.05	0.87 | 1.07	0.91 | 1.06	0.97 | 1.05	0.97 | 1.06
46	**Dynamic Voltage Warnings**					
47		63369 [JAMESTN3] 0.66	63369 [JAMESTN3] 0.63	63369 [JAMESTN3] 0.66	none	none
48		63198 [BUFFALOY] 0.68	63358 [BUFFALO3] 0.65	63198 [BUFFALOY] 0.68		
49		63358 [BUFFALO3] 0.68	63198 [BUFFALOY] 0.65	63199 [JAMSTN1Y] 0.68		
50		63199 [JAMSTN1Y] 0.68	63199 [JAMSTN1Y] 0.66	63200 [JAMSTN2Y] 0.68		
51		63200 [JAMSTN2Y] 0.68	63200 [JAMSTN2Y] 0.66	63358 [BUFFALO3] 0.68		
52			63258 [BUFFALO7] 0.67	63269 [JAMSTWN7] 0.69		
53			3259 [ALICE 7] 0.67 +mo			
54	Worst Case Angle Damping					
55	Dorsey SUVP / UdHold		/ 0.166			
56	Forbes DC Red (DCAR)	329%	291%	319%	492%	485%
57	K22W (max +dP @ t, d-ang)	3.7@(0.14167,-0.2)	32.1@(2.75832,-4.2)	3.7@(0.14167,-0.2)	35.1@(2.00000,-16.9)	36.5@(2.00000,-16.4)
58	K22W (max -dP @ t, d-ang)	25.3@(0.93333,5.2)	33.1@(0.91666,7.8)	23.4@(0.86666,5.0)	3.1@(0.31667,-0.2)	3.1@(0.33333,-0.2)
59	K22W (max d-ang @ t, dP)	8.2@(1.24166,-12.5)	11.3@(1.21666,-23.6)	8.5@(1.18333,-10.0)	-16.9@(2.00000,35.1)	-16.4@(1.99166,36.3)
60	**OS Rel Trip / Marg**					
61	MH - OH					
62	D602F at Forbes/Dorsey	136% / 205%	143% / 217%	150% / 229%	166% / 255%	166% / 254%
63	82R at Rugby/L20D at Drayton	999% / 616%	999% / 521%	999% / 565%	999% / 589%	999% / 524%
64	R50M / F3M	581% / 252%	597% / 263%	610% / 265%	621% / 246%	618% / 255%
65	B10T	143%	103%	120%	137%	111%
66	**FSCAPS (SS/Unav/Final)**					
67	Balta 230	(0 | 0 | 0)	(0 | 2 | 0)	(0 | 1 | 0)	(0 | 0 | 0)	(0 | 0 | 0)
68	Eau Cl 345 / Park Lk 115	(3 | 3 | 3) / (0 | 0 | 0)	(3 | 3 | 3) / (0 | 0 | 0)	(3 | 3 | 3) / (0 | 0 | 0)	(3 | 3 | 3) / (0 | 0 | 0)	(3 | 3 | 3) / (0 | 0 | 0)
69	Prairie 115 / Ramsey 230	(1 |10 | 3) / (0 | 2 | 1)	(1 | 9 | 2) / (0 | 2 | 1)	(1 | 8 | 3) / (0 | 1 | 0)	(1 | 3 | 2) / (0 | 1 | 1)	(1 | 5 | 1) / (0 | 1 | 1)
70	Roseau 230 / Running 230	(0 | 1 | 1) / (1 | 2 | 2)	(0 | 1 | 1) / (1 | 2 | 1)	(0 | 1 | 1) / (1 | 2 | 2)	(0 | 0 | 0) / (1 | 1 | 1)	(0 | 0 | 0) / (1 | 1 | 1)
71	Shey 115 / Split Rock 115	(2 | 5 | 3) / (1 | 2 | 2)	(2 | 5 | 2) / (1 | 2 | 2)	(2 | 5 | 1) / (1 | 2 | 2)	(2 | 5 | 1) / (1 | 1 | 1)	(2 | 5 | 1) / (1 | 1 | 1)
72	**Damping Performance**	N/A	N/A	N/A	N/A	N/A

Appendix E.4 - Simulation Summary Tables With GI-0616 and GI-0707A, Without GI-0619 (Case b14)

1	**Case No.**	21	22	23	24	25
2	**Case Name**	b14-so11aa-fds	b14-so11aa-ha3	b14-so11aa-hb3	b14-so11aa-hc3	b14-so11aa-nmz
3	**Disturbance**	fds	ha3	hb3	hc3	nmz
4	**Prior Outage**	None	None	None	None	None
5	**Date/Time**	OCT 29 2008 15:46	OCT 29 2008 15:50	OCT 29 2008 15:52	OCT 29 2008 15:54	OCT 29 2008 15:55
6	**Comments**					
7						
8	**Steady State Flows**					
9	NDEX / EAST BIAS	2079 / 348	2079 / 348	2079 / 348	2079 / 348	2079 / 348
10	MHEX / L20D	2174 / 236	2174 / 236	2174 / 236	2174 / 236	2174 / 236
11	ECL-ARP / PRI-BYN	550 / 693	550 / 693	550 / 693	550 / 693	550 / 693
12	MWEX / AHD-SLK	1525 / 664	1525 / 664	1525 / 664	1525 / 664	1525 / 664
13	D602F / F601C	1814 / 1564	1814 / 1564	1814 / 1564	1814 / 1564	1814 / 1564
14	B10T / MH>SPC	166 / 62	166 / 62	166 / 62	166 / 62	166 / 62
15	OH E-W / OH>MH	189 / -196	189 / -196	189 / -196	189 / -196	189 / -196
16	R50M / OH>MP	159 / 150	159 / 150	159 / 150	159 / 150	159 / 150
17	G82R	-36	-36	-36	-36	-36
18	Dorsey bipole / CU bipole	3245 / 1104	3245 / 1104	3245 / 1104	3245 / 1104	3245 / 1104
19	Dorsey Reserve / Wtrtn SVC	159 / 70	159 / 70	159 / 70	159 / 70	159 / 70
20	Forbes SVC / MSC	32 / 600	32 / 600	32 / 600	32 / 600	32 / 600
21	RCDC	0	0	0	0	0
22	**Steady State Vltgs**					
23	Dorsey 500/Dorsey 230	0.999 / 1.045	0.999 / 1.045	0.999 / 1.045	0.999 / 1.045	0.999 / 1.045
24	Roseau 500/Forbes 500	1.013 / 0.992	1.013 / 0.992	1.013 / 0.992	1.013 / 0.992	1.013 / 0.992
25	Chisago 500/EauClaire 345	1.001 / 1.002	1.001 / 1.002	1.001 / 1.002	1.001 / 1.002	1.001 / 1.002
26	Int Falls 115/Badoura 115	1.020 / 1.012	1.020 / 1.012	1.020 / 1.012	1.020 / 1.012	1.020 / 1.012
27	Drayton 230/Groton 345	1.013 / 0.991	1.013 / 0.991	1.013 / 0.991	1.013 / 0.991	1.013 / 0.991
28	**SS OS Relay Margins**					
29	D602F at Forbes/Dorsey	202% / 314%	202% / 314%	202% / 314%	202% / 314%	202% / 314%
30	82R at Rugby/L20D at Drayton	999% / 854%	999% / 854%	999% / 854%	999% / 854%	999% / 854%
31	R50M/F3M	770% / 325%	770% / 325%	770% / 325%	770% / 325%	770% / 325%
32	B10T	331%	331%	331%	331%	331%
33	**Min/MaxTransientVltg**					
34	Arrowhd 230	0.93 | 1.01	0.98 | 0.99	0.96 | 1.01	0.98 | 0.99	0.92 | 1.05
35	Boise 115	1.00 | 1.05	1.01 | 1.02	1.00 | 1.06	1.01 | 1.02	0.93 | 1.04
36	Dorsey 230	1.02 | 1.06	1.04 | 1.05	1.03 | 1.06	1.04 | 1.05	1.04 | 1.17
37	Forbes 230	0.97 | 1.03	1.00 | 1.00	0.98 | 1.02	0.99 | 1.00	0.97 | 1.03
38	Riverton 230	0.92 | 1.06	1.00 | 1.02	0.97 | 1.04	0.99 | 1.01	0.87 | 1.05
39	Coal Creek 230	0.96 | 1.14	1.01 | 1.05	0.97 | 1.12	0.99 | 1.06	0.94 | 1.10
40	Jamestown 345	0.70 | 1.04	0.92 | 0.96	0.85 | 1.02	0.88 | 0.95	0.78 | 1.01
41	Drayton 230	0.99 | 1.12	1.00 | 1.02	0.98 | 1.10	0.98 | 1.03	0.96 | 1.09
42	Groton 345	0.85 | 1.05	1.00 | 1.05	0.99 | 1.06	1.04 | 1.06	0.82 | 1.03
43	Minong 161	0.98 | 1.05	1.02 | 1.03	1.01 | 1.05	1.02 | 1.03	0.99 | 1.09
44	Wahpeton 115	0.84 | 1.09	0.99 | 1.02	0.93 | 1.07	0.96 | 1.01	0.82 | 1.06
45	Watertown 345	0.91 | 1.06	1.02 | 1.04	1.00 | 1.05	1.03 | 1.04	0.87 | 1.05
46	**Dynamic Voltage Warnings**					
47		none	none	none	none	none
48						
49						
50						
51						
52						
53						
54	Worst Case Angle Damping					
55	Dorsey SUVP / UdHold	/ 0.166				/ 0.133
56	Forbes DC Red (DCAR)	344%	494%	394%	506%	507%
57	K22W (max +dP @ t, d-ang)	20.8@(2.67499,-3.2)	1.5@(0.13333,0.0)	14.3@(2.49999,-0.1)	1.5@(0.13333,0.0)	134.4@(2.67499,-57.1)
58	K22W (max -dP @ t, d-ang)	23.1@(0.79166,4.6)	6.1@(2.95832,0.8)	16.1@(0.73333,4.2)	9.9@(2.10833,1.1)	90.8@(0.23333,7.2)
59	K22W (max d-ang @ t, dP)	7.9@(1.12500,-16.2)	1.3@(3.37498,-2.7)	5.8@(1.00000,-8.2)	3.2@(1.30833,-7.6)	-59.3@(2.39166,126.4)
60	**OS Rel Trip / Marg**					
61	MH - OH					
62	D602F at Forbes/Dorsey	157% / 240%	189% / 293%	158% / 241%	171% / 262%	0.18333 sec / 0.18333 sec
63	82R at Rugby/L20D at Drayton	999% / 593%	999% / 820%	999% / 649%	999% / 810%	999% / 515%
64	R50M / F3M	604% / 265%	731% / 312%	642% / 272%	678% / 300%	323% / 144%
65	B10T	137%	319%	177%	331%	123%
66	**FSCAPS (SS/Unav/Final)**					
67	Balta 230	(0 | 1 | 0)	(0 | 0 | 0)	(0 | 1 | 0)	(0 | 0 | 0)	(0 | 2 | 0)
68	Eau Cl 345 / Park Lk 115	(3 | 3 | 3) / (0 | 0 | 0)	(3 | 3 | 3) / (0 | 0 | 0)	(3 | 3 | 3) / (0 | 0 | 0)	(3 | 3 | 3) / (0 | 0 | 0)	(3 | 3 | 1) / (0 | 0 | 0)
69	Prairie 115 / Ramsey 230	(1 | 6 | 2) / (0 | 2 | 1)	(1 | 1 | 1) / (0 | 0 | 0)	(1 | 6 | 2) / (0 | 2 | 1)	(1 | 4 | 3) / (0 | 1 | 1)	(1 | 6 | 1) / (0 | 1 | 1)
70	Roseau 230 / Running 230	(0 | 0 | 0) / (1 | 2 | 2)	(0 | 0 | 0) / (1 | 1 | 1)	(0 | 1 | 1) / (1 | 2 | 1)	(0 | 0 | 0) / (1 | 1 | 1)	(0 | 2 | 0) / (1 | 4 | 2)
71	Shey 115 / Split Rock 115	(2 | 5 | 2) / (1 | 2 | 2)	(2 | 3 | 3) / (1 | 1 | 1)	(2 | 5 | 3) / (1 | 2 | 2)	(2 | 5 | 5) / (1 | 1 | 1)	(2 | 5 | 4) / (1 | 2 | 2)
72	**Damping Performance**	N/A	N/A	N/A	N/A	N/A

Appendix E.4 - Simulation Summary Tables With GI-0616 and GI-0707A, Without GI-0619 (Case b14)

1	**Case No.**	26	27	28	29	30
2	**Case Name**	b14-so11aa-pcs	b14-so11aa-pct	b14-so11aa-pys	b14-so11aa-pyt	b14-so11aa-ya3
3	**Disturbance**	pcs	pct	pys	pyt	ya3
4	**Prior Outage**	None	None	None	None	None
5	**Date/Time**	OCT 29 2008 15:58	OCT 29 2008 16:04	OCT 29 2008 16:08	OCT 29 2008 16:15	OCT 29 2008 15:48
6	**Comments**					
7						
8	**Steady State Flows**					
9	NDEX / EAST BIAS	2079 / 348	2079 / 348	2079 / 348	2079 / 348	2079 / 348
10	MHEX / L20D	2174 / 236	2174 / 236	2174 / 236	2174 / 236	2174 / 236
11	ECL-ARP / PRI-BYN	550 / 693	550 / 693	550 / 693	550 / 693	550 / 693
12	MWEX / AHD-SLK	1525 / 664	1525 / 664	1525 / 664	1525 / 664	1525 / 664
13	D602F / F601C	1814 / 1564	1814 / 1564	1814 / 1564	1814 / 1564	1814 / 1564
14	B10T / MH>SPC	166 / 62	166 / 62	166 / 62	166 / 62	166 / 62
15	OH E-W / OH>MH	189 / -196	189 / -196	189 / -196	189 / -196	189 / -196
16	R50M / OH>MP	159 / 150	159 / 150	159 / 150	159 / 150	159 / 150
17	G82R	-36	-36	-36	-36	-36
18	Dorsey bipole / CU bipole	3245 / 1104	3245 / 1104	3245 / 1104	3245 / 1104	3245 / 1104
19	Dorsey Reserve / Wtrtn SVC	159 / 70	159 / 70	159 / 70	159 / 70	159 / 70
20	Forbes SVC / MSC	32 / 600	32 / 600	32 / 600	32 / 600	32 / 600
21	RCDC	0	0	0	0	0
22	**Steady State Vltgs**					
23	Dorsey 500/Dorsey 230	0.999 / 1.045	0.999 / 1.045	0.999 / 1.045	0.999 / 1.045	0.999 / 1.045
24	Roseau 500/Forbes 500	1.013 / 0.992	1.013 / 0.992	1.013 / 0.992	1.013 / 0.992	1.013 / 0.992
25	Chisago 500/EauClaire 345	1.001 / 1.002	1.001 / 1.002	1.001 / 1.002	1.001 / 1.002	1.001 / 1.002
26	Int Falls 115/Badoura 115	1.020 / 1.012	1.020 / 1.012	1.020 / 1.012	1.020 / 1.012	1.020 / 1.012
27	Drayton 230/Groton 345	1.013 / 0.991	1.013 / 0.991	1.013 / 0.991	1.013 / 0.991	1.013 / 0.991
28	**SS OS Relay Margins**					
29	D602F at Forbes/Dorsey	202% / 314%	202% / 314%	202% / 314%	202% / 314%	202% / 314%
30	82R at Rugby/L20D at Drayton	999% / 854%	999% / 854%	999% / 854%	999% / 854%	999% / 854%
31	R50M/F3M	770% / 325%	770% / 325%	770% / 325%	770% / 325%	770% / 325%
32	B10T	331%	331%	331%	331%	331%
33	**Min/MaxTransientVltg**					
34	Arrowhd 230	0.83 | 0.96	0.91 | 0.94	0.95 | 0.99	0.97 | 0.99	0.99 | 1.00
35	Boise 115	1.00 | 1.06	1.02 | 1.03	0.99 | 1.05	1.02 | 1.03	1.02 | 1.04
36	Dorsey 230	1.02 | 1.09	1.04 | 1.05	1.02 | 1.08	1.04 | 1.05	1.04 | 1.05
37	Forbes 230	0.98 | 1.03	0.99 | 1.00	0.98 | 1.04	1.00 | 1.01	0.99 | 1.01
38	Riverton 230	0.98 | 1.03	1.00 | 1.02	1.00 | 1.03	1.01 | 1.03	1.00 | 1.01
39	Coal Creek 230	0.97 | 1.07	1.02 | 1.05	0.98 | 1.08	1.02 | 1.05	1.02 | 1.05
40	Jamestown 345	0.89 | 0.99	0.95 | 0.96	0.90 | 0.98	0.95 | 0.97	0.95 | 0.97
41	Drayton 230	1.01 | 1.06	1.01 | 1.02	1.01 | 1.06	1.01 | 1.03	1.01 | 1.03
42	Groton 345	0.93 | 1.00	0.98 | 1.00	0.95 | 0.99	0.98 | 1.00	0.98 | 0.99
43	Minong 161	0.83 | 0.99	0.94 | 0.97	0.97 | 1.04	1.00 | 1.02	0.97 | 1.01
44	Wahpeton 115	0.98 | 1.05	1.01 | 1.03	0.98 | 1.04	1.01 | 1.03	1.01 | 1.03
45	Watertown 345	0.97 | 1.02	1.01 | 1.02	0.99 | 1.02	1.01 | 1.02	1.01 | 1.02
46	**Dynamic Voltage Warnings**					
47		none	none	none	none	none
48						
49						
50						
51						
52						
53						
54	Worst Case Angle Damping	SHERC3 / 70.54%	SHERC3 / 58.45%	SHERC3 / 79.21%	SHERC3 / 60.17%	
55	Dorsey SUVP / UdHold					
56	Forbes DC Red (DCAR)	75%	295%	145%	354%	394%
57	K22W (max +dP @ t, d-ang)	7.9@(3.54997,0.5)	0.0@(0.10000,0.0)	13.6@(2.53332,-1.2)	0.0@(0.10000,0.0)	3.9@(0.11667,0.8)
58	K22W (max -dP @ t, d-ang)	54.6@(1.49166,21.9)	32.9@(2.14166,13.2)	32.7@(1.71666,6.5)	20.6@(1.84166,7.8)	25.2@(1.70000,10.9)
59	K22W (max d-ang @ t, dP)	25.6@(1.14166,-53.0)	13.2@(2.15833,-32.9)	17.5@(1.07500,-28.5)	8.3@(2.22499,-19.0)	11.0@(1.94166,-23.0)
60	**OS Rel Trip / Marg**					
61	MH - OH					
62	D602F at Forbes/Dorsey	149% / 226%	202% / 314%	144% / 217%	202% / 314%	200% / 311%
63	82R at Rugby/L20D at Drayton	999% / 561%	999% / 766%	999% / 629%	999% / 785%	999% / 739%
64	R50M / F3M	536% / 325%	709% / 325%	573% / 296%	751% / 325%	770% / 325%
65	B10T	146%	282%	172%	285%	264%
66	**FSCAPS (SS/Unav/Final)**					
67	Balta 230	(0 | 0 | 0)	(0 | 0 | 0)	(0 | 0 | 0)	(0 | 0 | 0)	(0 | 0 | 0)
68	Eau Cl 345 / Park Lk 115	(3 | 4 | 3) / (0 | 3 | 3)	(3 | 3 | 3) / (0 | 0 | 0)	(3 | 4 | 4) / (0 | 3 | 3)	(3 | 3 | 3) / (0 | 0 | 0)	(3 | 4 | 4) / (0 | 0 | 0)
69	Prairie 115 / Ramsey 230	(1 | 3 | 2) / (0 | 1 | 1)	(1 | 1 | 1) / (0 | 0 | 0)	(1 | 3 | 2) / (0 | 1 | 1)	(1 | 1 | 1) / (0 | 0 | 0)	(1 | 1 | 1) / (0 | 0 | 0)
70	Roseau 230 / Running 230	(0 | 1 | 1) / (1 | 2 | 2)	(0 | 0 | 0) / (1 | 1 | 1)	(0 | 1 | 1) / (1 | 2 | 2)	(0 | 0 | 0) / (1 | 1 | 1)	(0 | 0 | 0) / (1 | 1 | 1)
71	Shey 115 / Split Rock 115	(2 | 4 | 4) / (1 | 1 | 1)	(2 | 2 | 2) / (1 | 1 | 1)	(2 | 3 | 3) / (1 | 1 | 1)	(2 | 2 | 2) / (1 | 1 | 1)	(2 | 2 | 2) / (1 | 1 | 1)
72	**Damping Performance**	N/A	N/A	N/A	N/A	N/A

Appendix E.4 - Simulation Summary Tables With GI-0616 and GI-0707A, Without GI-0619 (Case b14)

1	**Case No.**	31
2	**Case Name**	b14-so11aa-yas
3	**Disturbance**	yas
4	**Prior Outage**	None
5	**Date/Time**	OCT 29 2008 16:28
6	**Comments**	
7		
8	**Steady State Flows**	
9	NDEX / EAST BIAS	2079 / 348
10	MHEX / L20D	2174 / 236
11	ECL-ARP / PRI-BYN	550 / 693
12	MWEX / AHD-SLK	1525 / 664
13	D602F / F601C	1814 / 1564
14	B10T / MH>SPC	166 / 62
15	OH E-W / OH>MH	189 / -196
16	R50M / OH>MP	159 / 150
17	G82R	-36
18	Dorsey bipole / CU bipole	3245 / 1104
19	Dorsey Reserve / Wtrtn SVC	159 / 70
20	Forbes SVC / MSC	32 / 600
21	RCDC	0
22	**Steady State Vltgs**	
23	Dorsey 500/Dorsey 230	0.999 / 1.045
24	Roseau 500/Forbes 500	1.013 / 0.992
25	Chisago 500/EauClaire 345	1.001 / 1.002
26	Int Falls 115/Badoura 115	1.020 / 1.012
27	Drayton 230/Groton 345	1.013 / 0.991
28	**SS OS Relay Margins**	
29	D602F at Forbes/Dorsey	202% / 314%
30	82R at Rugby/L20D at Drayton	999% / 854%
31	R50M/F3M	770% / 325%
32	B10T	331%
33	**Min/MaxTransientVltg**	
34	Arrowhd 230	0.91 | 0.98
35	Boise 115	1.03 | 1.06
36	Dorsey 230	1.04 | 1.07
37	Forbes 230	0.99 | 1.02
38	Riverton 230	0.97 | 1.02
39	Coal Creek 230	0.99 | 1.06
40	Jamestown 345	0.93 | 0.98
41	Drayton 230	1.00 | 1.03
42	Groton 345	0.98 | 0.99
43	Minong 161	1.02 | 1.10
44	Wahpeton 115	1.00 | 1.03
45	Watertown 345	1.01 | 1.02
46	**Dynamic Voltage Warnings**	
47		39449] 1.25
48		
49		
50		
51		
52		
53		
54	Worst Case Angle Damping	
55	Dorsey SUVP / UdHold	
56	Forbes DC Red (DCAR)	386%
57	K22W (max +dP @ t, d-ang)	2.5@(0.11667,0.4)
58	K22W (max -dP @ t, d-ang)	24.2@(1.25833,9.1)
59	K22W (max d-ang @ t, dP)	9.2@(1.09166,-22.0)
60	**OS Rel Trip / Marg**	
61	MH - OH	
62	D602F at Forbes/Dorsey	184% / 284%
63	82R at Rugby/L20D at Drayton	999% / 732%
64	R50M / F3M	733% / 325%
65	B10T	252%
66	**FSCAPS (SS/Unav/Final)**	
67	Balta 230	(0 | 0 | 0)
68	Eau Cl 345 / Park Lk 115	(3 | 4 | 4) / (0 | 0 | 0)
69	Prairie 115 / Ramsey 230	(1 | 1 | 1) / (0 | 0 | 0)
70	Roseau 230 / Running 230	(0 | 0 | 0) / (1 | 2 | 2)
71	Shey 115 / Split Rock 115	(2 | 3 | 3) / (1 | 1 | 1)
72	**Damping Performance**	N/A

Appendix E.5 - Simulation Summary Tables With GI-0616 and GI-0707A, Without GI-0619, With System Reinforcement (Case b16)

1	**Case No.**	1	2	3	4	5
2	**Case Name**	b16-so11aa-yas	b16-so11aa-ac3	b16-so11aa-bl3	b16-so11aa-ec3	b16-so11aa-ef3
3	**Disturbance**	yas	ac3	bl3	ec3	ef3
4	**Prior Outage**	None	None	None	None	None
5	**Date/Time**	OCT 29 2008 17:42	OCT 29 2008 17:43	OCT 29 2008 17:45	OCT 29 2008 17:47	NOV 03 2008 14:50
6	**Comments**					
7						
8	**Steady State Flows**					
9	NDEX / EAST BIAS	2078 / 345	2078 / 345	2078 / 345	2078 / 345	2078 / 345
10	MHEX / L20D	2174 / 238	2174 / 238	2174 / 238	2174 / 238	2174 / 238
11	ECL-ARP / PRI-BYN	550 / 691	550 / 691	550 / 691	550 / 691	550 / 691
12	MWEX / AHD-SLK	1524 / 665	1524 / 665	1524 / 665	1524 / 665	1524 / 665
13	D602F / F601C	1810 / 1559	1810 / 1559	1810 / 1559	1810 / 1559	1810 / 1559
14	B10T / MH>SPC	165 / 61	165 / 61	165 / 61	165 / 61	165 / 61
15	OH E-W / OH>MH	190 / -195	190 / -195	190 / -195	190 / -195	190 / -195
16	R50M / OH>MP	158 / 150	158 / 150	158 / 150	158 / 150	158 / 150
17	G82R	-33	-33	-33	-33	-33
18	Dorsey bipole / CU bipole	3243 / 1104	3243 / 1104	3243 / 1104	3243 / 1104	3243 / 1104
19	Dorsey Reserve / Wtrtn SVC	175 / 47	175 / 47	175 / 47	175 / 47	175 / 47
20	Forbes SVC / MSC	32 / 600	32 / 600	32 / 600	32 / 600	32 / 600
21	RCDC	0	0	0	0	0
22	**Steady State Vltgs**					
23	Dorsey 500/Dorsey 230	0.999 / 1.045	0.999 / 1.045	0.999 / 1.045	0.999 / 1.045	0.999 / 1.045
24	Roseau 500/Forbes 500	1.015 / 0.995	1.015 / 0.995	1.015 / 0.995	1.015 / 0.995	1.015 / 0.995
25	Chisago 500/EauClaire 345	1.003 / 1.002	1.003 / 1.002	1.003 / 1.002	1.003 / 1.002	1.003 / 1.002
26	Int Falls 115/Badoura 115	1.019 / 1.015	1.019 / 1.015	1.019 / 1.015	1.019 / 1.015	1.019 / 1.015
27	Drayton 230/Groton 345	1.015 / 1.003	1.015 / 1.003	1.015 / 1.003	1.015 / 1.003	1.015 / 1.003
28	**SS OS Relay Margins**					
29	D602F at Forbes/Dorsey	205% / 318%	205% / 318%	205% / 318%	205% / 318%	205% / 318%
30	82R at Rugby/L20D at Drayton	999% / 849%	999% / 849%	999% / 849%	999% / 849%	999% / 849%
31	R50M/F3M	777% / 323%	777% / 323%	777% / 323%	777% / 323%	777% / 323%
32	B10T	334%	334%	334%	334%	334%
33	**Min/MaxTransientVltg**					
34	Arrowhd 230	0.91 | 0.99	0.96 | 1.01	0.94 | 1.02	0.94 | 1.01	0.93 | 1.02
35	Boise 115	1.03 | 1.05	0.99 | 1.05	0.99 | 1.06	0.99 | 1.05	0.99 | 1.06
36	Dorsey 230	1.04 | 1.07	1.02 | 1.05	1.03 | 1.07	1.02 | 1.06	1.01 | 1.07
37	Forbes 230	0.99 | 1.02	0.98 | 1.02	0.97 | 1.04	0.97 | 1.03	0.97 | 1.03
38	Riverton 230	0.97 | 1.03	0.96 | 1.04	0.91 | 1.07	0.93 | 1.05	0.89 | 1.06
39	Coal Creek 230	0.99 | 1.06	0.95 | 1.12	1.01 | 1.10	0.93 | 1.14	1.01 | 1.09
40	Jamestown 345	0.93 | 0.98	0.83 | 1.01	0.70 | 1.04	0.70 | 1.03	(0.58)0.64 | 1.06
41	Drayton 230	1.00 | 1.03	0.98 | 1.10	0.97 | 1.12	0.98 | 1.14	0.94 | 1.11
42	Groton 345	0.99 | 1.01	0.79 | 1.01	0.84 | 1.09	0.88 | 1.04	(0.79)0.69 | 1.09
43	Minong 161	1.02 | 1.10	1.00 | 1.04	0.99 | 1.05	0.99 | 1.05	0.98 | 1.07
44	Wahpeton 115	1.00 | 1.04	0.90 | 1.06	0.82 | 1.10	0.87 | 1.09	(0.71)0.77 | 1.11
45	Watertown 345	1.01 | 1.02	0.91 | 1.03	0.89 | 1.08	0.93 | 1.05	0.80 | 1.09
46	**Dynamic Voltage Warnings**					
47		39449] 1.25	none			63369 [JAMESTN3] 0.65
48						63198 [BUFFALOY] 0.66
49						63358 [BUFFALO3] 0.66
50						63199 [JAMSTN1Y] 0.67
51						63200 [JAMSTN2Y] 0.67
52						63258 [BUFFALO7] 0.68
53						3259 [ALICE 7] 0.68 +mo
54	Worst Case Angle Damping					
55	Dorsey SUVP / UdHold			/ 0.150	/ 0.175	/ 0.150
56	Forbes DC Red (DCAR)	386%	399%	311%	387%	277%
57	K22W (max +dP @ t, d-ang)	2.5@(0.11667,0.4)	12.9@(2.64999,-1.5)	21.7@(2.79998,-0.6)	24.6@(2.63332,-3.1)	36.6@(3.02498,-5.5)
58	K22W (max -dP @ t, d-ang)	24.4@(1.25833,9.2)	25.7@(0.87500,7.7)	26.4@(0.85833,4.2)	23.6@(0.72500,4.3)	38.5@(1.09166,8.9)
59	K22W (max d-ang @ t, dP)	9.2@(1.10833,-22.5)	10.0@(1.15000,-15.0)	8.2@(1.23333,-10.9)	7.6@(1.06666,-10.1)	16.4@(1.48333,-22.5)
60	**OS Rel Trip / Marg**					
61	MH - OH					
62	D602F at Forbes/Dorsey	186% / 288%	144% / 217%	150% / 228%	155% / 238%	147% / 223%
63	82R at Rugby/L20D at Drayton	999% / 728%	999% / 649%	999% / 544%	999% / 606%	999% / 404%
64	R50M / F3M	739% / 323%	598% / 268%	594% / 251%	608% / 262%	613% / 250%
65	B10T	255%	190%	110%	137%	59%
66	**FSCAPS (SS/Unav/Final)**					
67	Balta 230	(0 | 0 | 0)	(0 | 1 | 0)	(0 | 3 | 0)	(0 | 3 | 0)	(0 | 2 | 0)
68	Eau Cl 345 / Park Lk 115	(3 | 4 | 4) / (0 | 0 | 0)	(3 | 3 | 3) / (0 | 0 | 0)	(3 | 3 | 3) / (0 | 0 | 0)	(3 | 3 | 3) / (0 | 0 | 0)	(3 | 3 | 3) / (0 | 0 | 0)
69	Prairie 115 / Ramsey 230	(1 | 1 | 1) / (0 | 0 | 0)	(1 | 5 | 2) / (0 | 2 | 1)	(1 |11 | 2) / (0 | 2 | 0)	(1 | 7 | 2) / (0 | 2 | 0)	(1 |12 | 1) / (0 | 2 | 0)
70	Roseau 230 / Running 230	(0 | 0 | 0) / (1 | 2 | 2)	(0 | 1 | 1) / (1 | 2 | 2)	(0 | 1 | 1) / (1 | 2 | 1)	(0 | 1 | 1) / (1 | 2 | 1)	(0 | 1 | 1) / (1 | 2 | 1)
71	Shey 115 / Split Rock 115	(2 | 3 | 3) / (1 | 1 | 1)	(2 | 5 | 4) / (1 | 1 | 1)	(2 | 5 | 2) / (1 | 2 | 2)	(2 | 5 | 3) / (1 | 2 | 2)	(2 | 5 | 1) / (1 | 2 | 2)
72	**Damping Performance**	N/A	N/A	N/A	N/A	N/A

Appendix E.5 - Simulation Summary Tables With GI-0616 and GI-0707A, Without GI-0619, With System Reinforcement (Case b16)

1	**Case No.**	6	7	8	9	10
2	**Case Name**	b16-so11aa-ef9	b16-so11aa-ei2	b16-so11aa-fd1	b16-so11aa-fd3	b16-so11aa-fd4
3	**Disturbance**	ef9	ei2	fd1	fd3	fd4
4	**Prior Outage**	None	None	None	None	None
5	**Date/Time**	NOV 04 2008 14:18	OCT 29 2008 17:50	OCT 29 2008 17:39	NOV 03 2008 14:52	OCT 29 2008 17:40
6	**Comments**					
7						
8	**Steady State Flows**					
9	NDEX / EAST BIAS	2078 / 345	2078 / 345	2078 / 345	2078 / 345	2078 / 345
10	MHEX / L20D	2174 / 238	2174 / 238	2174 / 238	2174 / 238	2174 / 238
11	ECL-ARP / PRI-BYN	550 / 691	550 / 691	550 / 691	550 / 691	550 / 691
12	MWEX / AHD-SLK	1524 / 665	1524 / 665	1524 / 665	1524 / 665	1524 / 665
13	D602F / F601C	1810 / 1559	1810 / 1559	1810 / 1559	1810 / 1559	1810 / 1559
14	B10T / MH>SPC	165 / 61	165 / 61	165 / 61	165 / 61	165 / 61
15	OH E-W / OH>MH	190 / -195	190 / -195	190 / -195	190 / -195	190 / -195
16	R50M / OH>MP	158 / 150	158 / 150	158 / 150	158 / 150	158 / 150
17	G82R	-33	-33	-33	-33	-33
18	Dorsey bipole / CU bipole	3243 / 1104	3243 / 1104	3243 / 1104	3243 / 1104	3243 / 1104
19	Dorsey Reserve / Wtrtn SVC	175 / 47	175 / 47	175 / 47	175 / 47	175 / 47
20	Forbes SVC / MSC	32 / 600	32 / 600	32 / 600	32 / 600	32 / 600
21	RCDC	0	0	0	0	0
22	**Steady State Vltgs**					
23	Dorsey 500/Dorsey 230	0.999 / 1.045	0.999 / 1.045	0.999 / 1.045	0.999 / 1.045	0.999 / 1.045
24	Roseau 500/Forbes 500	1.015 / 0.995	1.015 / 0.995	1.015 / 0.995	1.015 / 0.995	1.015 / 0.995
25	Chisago 500/EauClaire 345	1.003 / 1.002	1.003 / 1.002	1.003 / 1.002	1.003 / 1.002	1.003 / 1.002
26	Int Falls 115/Badoura 115	1.019 / 1.015	1.019 / 1.015	1.019 / 1.015	1.019 / 1.015	1.019 / 1.015
27	Drayton 230/Groton 345	1.015 / 1.003	1.015 / 1.003	1.015 / 1.003	1.015 / 1.003	1.015 / 1.003
28	**SS OS Relay Margins**					
29	D602F at Forbes/Dorsey	205% / 318%	205% / 318%	205% / 318%	205% / 318%	205% / 318%
30	82R at Rugby/L20D at Drayton	999% / 849%	999% / 849%	999% / 849%	999% / 849%	999% / 849%
31	R50M/F3M	777% / 323%	777% / 323%	777% / 323%	777% / 323%	777% / 323%
32	B10T	334%	334%	334%	334%	334%
33	**Min/MaxTransientVltg**					
34	Arrowhd 230	0.94 | 1.02	0.92 | 1.04	0.98 | 1.03	0.92 | 1.02	0.93 | 1.02
35	Boise 115	0.99 | 1.05	0.96 | 1.05	0.98 | 1.04	0.99 | 1.05	0.99 | 1.05
36	Dorsey 230	1.02 | 1.06	1.01 | 1.07	1.02 | 1.06	1.02 | 1.06	1.02 | 1.06
37	Forbes 230	0.98 | 1.03	0.93 | 1.02	0.98 | 1.03	0.97 | 1.03	0.97 | 1.03
38	Riverton 230	0.92 | 1.06	0.87 | 1.06	0.93 | 1.07	0.90 | 1.07	0.93 | 1.07
39	Coal Creek 230	1.01 | 1.09	1.00 | 1.12	0.97 | 1.14	0.96 | 1.14	0.96 | 1.14
40	Jamestown 345	0.72 | 1.04	0.75 | 1.03	(0.52)0.68 | 1.05	(0.48)0.64 | 1.06	(0.49)0.67 | 1.07
41	Drayton 230	0.97 | 1.12	0.92 | 1.11	0.97 | 1.11	0.96 | 1.12	0.98 | 1.12
42	Groton 345	0.82 | 1.08	0.82 | 1.07	0.88 | 1.04	0.84 | 1.06	0.88 | 1.06
43	Minong 161	0.99 | 1.06	0.99 | 1.08	1.02 | 1.06	0.98 | 1.05	0.99 | 1.05
44	Wahpeton 115	0.83 | 1.09	0.81 | 1.09	0.84 | 1.10	0.81 | 1.10	0.84 | 1.11
45	Watertown 345	0.88 | 1.08	0.87 | 1.07	0.92 | 1.05	0.89 | 1.07	0.93 | 1.07
46	**Dynamic Voltage Warnings**					
47				63369 [JAMESTN3] 0.68	63369 [JAMESTN3] 0.64	63369 [JAMESTN3] 0.67
48					63358 [BUFFALO3] 0.66	63199 [JAMSTN1Y] 0.69
49					63200 [JAMSTN2Y] 0.67	63200 [JAMSTN2Y] 0.69
50					63198 [BUFFALOY] 0.67	
51					63199 [JAMSTN1Y] 0.67	
52					63258 [BUFFALO7] 0.68	
53					3259 [ALICE 7] 0.68 +mo	
54	Worst Case Angle Damping					
55	Dorsey SUVP / UdHold	/ 0.150			/ 0.166	
56	Forbes DC Red (DCAR)	315%	507%	337%	319%	324%
57	K22W (max +dP @ t, d-ang)	20.4@(2.88332,-0.7)	70.5@(2.90832,-29.8)	3.7@(0.14167,-0.2)	24.9@(2.72499,-3.7)	4.5@(1.44166,5.0)
58	K22W (max -dP @ t, d-ang)	26.5@(0.95000,4.3)	15.1@(0.70833,2.6)	23.2@(0.90000,4.3)	27.8@(0.93333,7.7)	21.6@(0.84166,4.3)
59	K22W (max d-ang @ t, dP)	8.5@(1.30000,-10.7)	-34.6@(2.34999,63.2)	7.2@(1.21666,-10.1)	9.7@(1.17500,-18.1)	7.7@(1.15833,-8.9)
60	**OS Rel Trip / Marg**					
61	MH - OH					
62	D602F at Forbes/Dorsey	160% / 245%	98% / 145%	141% / 214%	149% / 227%	155% / 238%
63	82R at Rugby/L20D at Drayton	999% / 517%	999% / 480%	999% / 629%	999% / 537%	999% / 569%
64	R50M / F3M	623% / 255%	527% / 203%	596% / 251%	607% / 262%	621% / 264%
65	B10T	122%	70%	152%	112%	125%
66	**FSCAPS (SS/Unav/Final)**					
67	Balta 230	(0 | 0 | 0)	(0 | 2 | 0)	(0 | 0 | 0)	(0 | 2 | 0)	(0 | 0 | 0)
68	Eau Cl 345 / Park Lk 115	(3 | 3 | 3) / (0 | 0 | 0)	(3 | 3 | 2) / (0 | 0 | 0)	(3 | 3 | 3) / (0 | 0 | 0)	(3 | 3 | 3) / (0 | 0 | 0)	(3 | 3 | 3) / (0 | 0 | 0)
69	Prairie 115 / Ramsey 230	(1 |10 | 2) / (0 | 2 | 0)	(1 |11 | 2) / (0 | 2 | 1)	(1 | 7 | 2) / (0 | 2 | 1)	(1 | 9 | 2) / (0 | 2 | 1)	(1 | 8 | 2) / (0 | 1 | 1)
70	Roseau 230 / Running 230	(0 | 0 | 0) / (1 | 2 | 2)	(0 | 1 | 0) / (1 | 3 | 2)	(0 | 1 | 1) / (1 | 2 | 2)	(0 | 0 | 0) / (1 | 2 | 2)	(0 | 1 | 1) / (1 | 2 | 2)
71	Shey 115 / Split Rock 115	(2 | 5 | 2) / (1 | 2 | 2)	(2 | 5 | 3) / (1 | 2 | 2)	(2 | 5 | 2) / (1 | 2 | 2)	(2 | 5 | 1) / (1 | 2 | 2)	(2 | 5 | 1) / (1 | 2 | 2)
72	**Damping Performance**	N/A	N/A	N/A	N/A	N/A

Appendix E.5 - Simulation Summary Tables With GI-0616 and GI-0707A, Without GI-0619, With System Reinforcement (Case b16)

1	**Case No.**	11	12	13
2	**Case Name**	b16-so11aa-fdk	b16-so11aa-fdl	b16-so11aa-fds
3	**Disturbance**	fdk	fdl	fds
4	**Prior Outage**	None	None	None
5	**Date/Time**	OCT 30 2008 15:33	OCT 30 2008 15:35	NOV 05 2008 16:17
6	**Comments**			
7				
8	**Steady State Flows**			
9	NDEX / EAST BIAS	2078 / 345	2078 / 345	2078 / 345
10	MHEX / L20D	2174 / 238	2174 / 238	2174 / 238
11	ECL-ARP / PRI-BYN	550 / 691	550 / 691	550 / 691
12	MWEX / AHD-SLK	1524 / 665	1524 / 665	1524 / 665
13	D602F / F601C	1810 / 1559	1810 / 1559	1810 / 1559
14	B10T / MH>SPC	165 / 61	165 / 61	165 / 61
15	OH E-W / OH>MH	190 / -195	190 / -195	190 / -195
16	R50M / OH>MP	158 / 150	158 / 150	158 / 150
17	G82R	-33	-33	-33
18	Dorsey bipole / CU bipole	3243 / 1104	3243 / 1104	3243 / 1104
19	Dorsey Reserve / Wtrtn SVC	175 / 47	175 / 47	175 / 47
20	Forbes SVC / MSC	32 / 600	32 / 600	32 / 600
21	RCDC	0	0	0
22	**Steady State Vltgs**			
23	Dorsey 500/Dorsey 230	0.999 / 1.045	0.999 / 1.045	0.999 / 1.045
24	Roseau 500/Forbes 500	1.015 / 0.995	1.015 / 0.995	1.015 / 0.995
25	Chisago 500/EauClaire 345	1.003 / 1.002	1.003 / 1.002	1.003 / 1.002
26	Int Falls 115/Badoura 115	1.019 / 1.015	1.019 / 1.015	1.019 / 1.015
27	Drayton 230/Groton 345	1.015 / 1.003	1.015 / 1.003	1.015 / 1.003
28	**SS OS Relay Margins**			
29	D602F at Forbes/Dorsey	205% / 318%	205% / 318%	205% / 318%
30	82R at Rugby/L20D at Drayton	999% / 849%	999% / 849%	999% / 849%
31	R50M/F3M	777% / 323%	777% / 323%	777% / 323%
32	B10T	334%	334%	334%
33	**Min/MaxTransientVltg**			
34	Arrowhd 230	1.00 | 1.05	0.95 | 1.03	0.94 | 1.02
35	Boise 115	0.99 | 1.03	1.00 | 1.03	1.00 | 1.05
36	Dorsey 230	1.03 | 1.06	1.03 | 1.06	1.03 | 1.06
37	Forbes 230	0.99 | 1.02	0.98 | 1.02	0.98 | 1.03
38	Riverton 230	0.98 | 1.06	0.98 | 1.06	0.93 | 1.06
39	Coal Creek 230	0.99 | 1.10	0.98 | 1.10	0.96 | 1.13
40	Jamestown 345	0.83 | 1.06	0.80 | 1.07	0.72 | 1.04
41	Drayton 230	1.01 | 1.07	1.00 | 1.10	0.99 | 1.12
42	Groton 345	0.95 | 1.05	0.95 | 1.07	0.88 | 1.04
43	Minong 161	1.04 | 1.08	1.01 | 1.07	0.99 | 1.05
44	Wahpeton 115	0.95 | 1.09	0.95 | 1.11	0.86 | 1.09
45	Watertown 345	0.98 | 1.05	0.98 | 1.06	0.92 | 1.05
46	**Dynamic Voltage Warnings**			
47		none	none	none
48				
49				
50				
51				
52				
53				
54	Worst Case Angle Damping			
55	Dorsey SUVP / UdHold			/ 0.166
56	Forbes DC Red (DCAR)	496%	491%	369%
57	K22W (max +dP @ t, d-ang)	34.9@(2.00000,-16.5)	35.6@(2.00000,-15.9)	20.4@(2.65832,-3.2)
58	K22W (max -dP @ t, d-ang)	3.2@(0.31667,-0.2)	3.2@(0.32500,-0.2)	18.7@(0.71666,3.6)
59	K22W (max d-ang @ t, dP)	-16.5@(1.99166,34.7)	-15.9@(1.95833,34.4)	7.4@(1.10000,-11.6)
60	**OS Rel Trip / Marg**			
61	MH - OH			
62	D602F at Forbes/Dorsey	170% / 260%	169% / 260%	160% / 246%
63	82R at Rugby/L20D at Drayton	999% / 594%	999% / 525%	999% / 599%
64	R50M / F3M	631% / 246%	629% / 255%	613% / 264%
65	B10T	144%	118%	145%
66	**FSCAPS (SS/Unav/Final)**			
67	Balta 230	(0 | 0 | 0)	(0 | 0 | 0)	(0 | 1 | 0)
68	Eau Cl 345 / Park Lk 115	(3 | 3 | 3) / (0 | 0 | 0)	(3 | 3 | 3) / (0 | 0 | 0)	(3 | 3 | 3) / (0 | 0 | 0)
69	Prairie 115 / Ramsey 230	(1 | 4 | 2) / (0 | 1 | 1)	(1 | 5 | 1) / (0 | 1 | 1)	(1 | 6 | 2) / (0 | 2 | 1)
70	Roseau 230 / Running 230	(0 | 0 | 0) / (1 | 1 | 1)	(0 | 0 | 0) / (1 | 1 | 1)	(0 | 0 | 0) / (1 | 2 | 2)
71	Shey 115 / Split Rock 115	(2 | 5 | 1) / (1 | 1 | 1)	(2 | 5 | 0) / (1 | 1 | 1)	(2 | 5 | 2) / (1 | 2 | 2)
72	**Damping Performance**	N/A	N/A	N/A

Appendix E.6 - Simulation Summary Tables With GI-0616 and GI-0707A (Case b65)

1	**Case No.**	1	2	3	4	5
2	**Case Name**	b65-so11aa-ef3				
3	**Disturbance**	ef3				
4	**Prior Outage**	None				
5	**Date/Time**	DEC 24 2008 11:57				
6	**Comments**					
7						
8	**Steady State Flows**					
9	NDEX / EAST BIAS	2078 / 345				
10	MHEX / L20D	2174 / 236				
11	ECL-ARP / PRI-BYN	550 / 690				
12	MWEX / AHD-SLK	1524 / 664				
13	D602F / F601C	1807 / 1559				
14	B10T / MH>SPC	165 / 60				
15	OH E-W / OH>MH	190 / -195				
16	R50M / OH>MP	158 / 150				
17	G82R	-27				
18	Dorsey bipole / CU bipole	3243 / 1104				
19	Dorsey Reserve / Wtrtn SVC	181 / 43				
20	Forbes SVC / MSC	31 / 600				
21	RCDC	0				
22	**Steady State Vltgs**					
23	Dorsey 500/Dorsey 230	0.999 / 1.045				
24	Roseau 500/Forbes 500	1.016 / 0.995				
25	Chisago 500/EauClaire 345	1.003 / 1.002				
26	Int Falls 115/Badoura 115	1.019 / 1.010				
27	Drayton 230/Groton 345	1.016 / 1.004				
28	**SS OS Relay Margins**					
29	D602F at Forbes/Dorsey	206% / 320%				
30	82R at Rugby/L20D at Drayton	999% / 860%				
31	R50M/F3M	781% / 323%				
32	B10T	334%				
33	**Min/MaxTransientVltg**					
34	Arrowhd 230	0.94 | 1.01				
35	Boise 115	0.99 | 1.06				
36	Dorsey 230	1.02 | 1.07				
37	Forbes 230	0.97 | 1.04				
38	Riverton 230	0.90 | 1.06				
39	Coal Creek 230	1.01 | 1.10				
40	Jamestown 345	0.70 | 1.04				
41	Drayton 230	0.96 | 1.13				
42	Groton 345	0.80 | 1.08				
43	Minong 161	0.99 | 1.05				
44	Wahpeton 115	0.81 | 1.10				
45	Watertown 345	0.87 | 1.08				
46	**Dynamic Voltage Warnings**					
47						
48						
49						
50						
51						
52						
53						
54	Worst Case Angle Damping					
55	Dorsey SUVP / UdHold	/ 0.150				
56	Forbes DC Red (DCAR)	284%				
57	K22W (max +dP @ t, d-ang)	23.7@(2.93332,0.1)				
58	K22W (max -dP @ t, d-ang)	30.0@(0.95833,4.5)				
59	K22W (max d-ang @ t, dP)	9.9@(1.32500,-9.2)				
60	**OS Rel Trip / Marg**					
61	MH - OH					
62	D602F at Forbes/Dorsey	153% / 234%				
63	82R at Rugby/L20D at Drayton	999% / 506%				
64	R50M / F3M	616% / 251%				
65	B10T	112%				
66	**FSCAPS (SS/Unav/Final)**					
67	Balta 230	(0 | 1 | 0)				
68	Eau Cl 345 / Park Lk 115	(3 | 3 | 3) / (0 | 0 | 0)				
69	Prairie 115 / Ramsey 230	(1 |10 | 2) / (0 | 2 | 0)				
70	Roseau 230 / Running 230	(0 | 1 | 1) / (1 | 2 | 1)				
71	Shey 115 / Split Rock 115	(2 | 5 | 1) / (1 | 2 | 2)				
72	**Damping Performance**	N/A				

Appendix E.7 - Simulation Summary Tables Without GI-0619 (Case b32)

1	**Case No.**	1	2	3	4	5
2	**Case Name**	b32-so11aa-ag1	b32-so11aa-ag3	b32-so11aa-ef3	b32-so11aa-ei2	b32-so11aa-eq1
3	**Disturbance**	ag1	ag3	ef3	ei2	eq1
4	**Prior Outage**	None	None	None	None	None
5	**Date/Time**	JAN 27 2009 15:17	JAN 27 2009 15:09	JAN 27 2009 15:13	JAN 27 2009 15:11	JAN 27 2009 15:19
6	**Comments**					
7						
8	**Steady State Flows**					
9	NDEX / EAST BIAS	2080 / 366	2080 / 366	2080 / 366	2080 / 366	2080 / 366
10	MHEX / L20D	2172 / 235	2172 / 235	2172 / 235	2172 / 235	2172 / 235
11	ECL-ARP / PRI-BYN	549 / 694	549 / 694	549 / 694	549 / 694	549 / 694
12	MWEX / AHD-SLK	1524 / 664	1524 / 664	1524 / 664	1524 / 664	1524 / 664
13	D602F / F601C	1804 / 1565	1804 / 1565	1804 / 1565	1804 / 1565	1804 / 1565
14	B10T / MH>SPC	166 / 61	166 / 61	166 / 61	166 / 61	166 / 61
15	OH E-W / OH>MH	189 / -196	189 / -196	189 / -196	189 / -196	189 / -196
16	R50M / OH>MP	157 / 150	157 / 150	157 / 150	157 / 150	157 / 150
17	G82R	-25	-25	-25	-25	-25
18	Dorsey bipole / CU bipole	3242 / 1104	3242 / 1104	3242 / 1104	3242 / 1104	3242 / 1104
19	Dorsey Reserve / Wtrtn SVC	183 / 16	183 / 16	183 / 16	183 / 16	183 / 16
20	Forbes SVC / MSC	30 / 600	30 / 600	30 / 600	30 / 600	30 / 600
21	RCDC	0	0	0	0	0
22	**Steady State Vltgs**					
23	Dorsey 500/Dorsey 230	0.999 / 1.045	0.999 / 1.045	0.999 / 1.045	0.999 / 1.045	0.999 / 1.045
24	Roseau 500/Forbes 500	1.028 / 0.993	1.028 / 0.993	1.028 / 0.993	1.028 / 0.993	1.028 / 0.993
25	Chisago 500/EauClaire 345	1.002 / 1.002	1.002 / 1.002	1.002 / 1.002	1.002 / 1.002	1.002 / 1.002
26	Int Falls 115/Badoura 115	1.019 / 1.014	1.019 / 1.014	1.019 / 1.014	1.019 / 1.014	1.019 / 1.014
27	Drayton 230/Groton 345	1.021 / 1.013	1.021 / 1.013	1.021 / 1.013	1.021 / 1.013	1.021 / 1.013
28	**SS OS Relay Margins**					
29	D602F at Forbes/Dorsey	206% / 320%	206% / 320%	206% / 320%	206% / 320%	206% / 320%
30	82R at Rugby/L20D at Drayton	999% / 877%	999% / 877%	999% / 877%	999% / 877%	999% / 877%
31	R50M/F3M	785% / 323%	785% / 323%	785% / 323%	785% / 323%	785% / 323%
32	B10T	330%	330%	330%	330%	330%
33	**Min/MaxTransientVltg**					
34	Arrowhd 230	0.96 | 1.00	0.96 | 1.00	0.93 | 1.01	0.91 | 1.03	0.95 | 1.02
35	Boise 115	0.99 | 1.06	0.99 | 1.06	0.99 | 1.07	0.96 | 1.05	0.99 | 1.04
36	Dorsey 230	1.02 | 1.06	1.02 | 1.06	1.01 | 1.07	1.01 | 1.07	1.03 | 1.06
37	Forbes 230	0.98 | 1.02	0.98 | 1.02	0.97 | 1.03	0.93 | 1.02	0.97 | 1.01
38	Riverton 230	0.96 | 1.04	0.96 | 1.04	0.89 | 1.07	0.86 | 1.05	0.92 | 1.04
39	Coal Creek 230	0.96 | 1.12	0.96 | 1.12	1.01 | 1.10	1.00 | 1.12	0.98 | 1.16
40	Jamestown 345	0.89 | 1.08	0.89 | 1.07	0.71 | 1.12	0.80 | 1.09	0.84 | 1.08
41	Drayton 230	0.98 | 1.09	0.98 | 1.09	0.96 | 1.12	0.93 | 1.11	1.00 | 1.08
42	Groton 345	0.86 | 1.04	0.86 | 1.05	0.77 | 1.12	0.82 | 1.10	0.87 | 1.08
43	Minong 161	1.00 | 1.04	1.00 | 1.04	0.98 | 1.06	0.99 | 1.07	1.01 | 1.07
44	Wahpeton 115	0.93 | 1.08	0.93 | 1.08	0.80 | 1.13	0.82 | 1.10	0.88 | 1.08
45	Watertown 345	0.94 | 1.04	0.94 | 1.04	0.85 | 1.10	0.87 | 1.09	0.92 | 1.07
46	**Dynamic Voltage Warnings**					
47		none	none	none	none	none
48						
49						
50						
51						
52						
53						
54	Worst Case Angle Damping					
55	Dorsey SUVP / UdHold			/ 0.150		
56	Forbes DC Red (DCAR)	403%	385%	254%	507%	507%
57	K22W (max +dP @ t, d-ang)	2.1@(0.13333,-0.1)	13.3@(2.53332,1.8)	27.1@(3.00831,1.3)	66.4@(2.88332,-28.4)	38.8@(1.87500,-19.0)
58	K22W (max -dP @ t, d-ang)	23.7@(1.89166,0.1)	23.6@(0.79166,6.9)	33.9@(0.94166,4.8)	14.9@(0.71666,2.6)	11.2@(0.67500,1.9)
59	K22W (max d-ang @ t, dP)	8.7@(1.10000,-10.3)	9.1@(1.05000,-11.9)	12.7@(1.36666,-13.8)	-33.3@(2.30833,58.9)	-20.4@(2.00000,38.4)
60	**OS Rel Trip / Marg**					
61	MH - OH					
62	D602F at Forbes/Dorsey	148% / 224%	146% / 222%	147% / 225%	98% / 145%	140% / 212%
63	82R at Rugby/L20D at Drayton	999% / 647%	999% / 634%	999% / 443%	999% / 495%	999% / 576%
64	R50M / F3M	615% / 265%	611% / 263%	618% / 251%	530% / 206%	613% / 246%
65	B10T	175%	166%	80%	69%	106%
66	**FSCAPS (SS/Unav/Final)**					
67	Balta 230	(0 | 1 | 0)	(0 | 1 | 0)	(0 | 2 | 0)	(0 | 1 | 0)	(0 | 2 | 0)
68	Eau Cl 345 / Park Lk 115	(3 | 3 | 3) / (0 | 0 | 0)	(3 | 3 | 3) / (0 | 0 | 0)	(3 | 3 | 3) / (0 | 0 | 0)	(3 | 3 | 2) / (0 | 0 | 0)	(3 | 3 | 3) / (0 | 0 | 0)
69	Prairie 115 / Ramsey 230	(1 | 6 | 3) / (0 | 2 | 1)	(1 | 4 | 2) / (0 | 2 | 1)	(1 |12 | 1) / (0 | 2 | 0)	(1 | 8 | 1) / (0 | 2 | 1)	(1 | 4 | 1) / (0 | 1 | 0)
70	Roseau 230 / Running 230	(0 | 1 | 1) / (1 | 2 | 2)	(0 | 1 | 1) / (1 | 2 | 1)	(0 | 1 | 0) / (1 | 3 | 1)	(0 | 1 | 0) / (1 | 3 | 2)	(0 | 1 | 1) / (1 | 2 | 2)
71	Shey 115 / Split Rock 115	(2 | 5 | 2) / (1 | 1 | 1)	(2 | 5 | 3) / (1 | 2 | 2)	(2 | 5 | 0) / (1 | 2 | 2)	(2 | 5 | 0) / (1 | 2 | 2)	(2 | 5 | 2) / (1 | 2 | 2)
72	**Damping Performance**	N/A	N/A	N/A	N/A	N/A

Appendix E.7 - Simulation Summary Tables Without GI-0619 (Case b32)

Case No.	6	7
Case Name	b32-so11aa-fds	b32-so11aa-nmz
Disturbance	fds	nmz
Prior Outage	None	None
Date/Time	JAN 27 2009 15:15	JAN 27 2009 15:20
Comments		
Steady State Flows		
NDEX / EAST BIAS	2080 / 366	2080 / 366
MHEX / L20D	2172 / 235	2172 / 235
ECL-ARP / PRI-BYN	549 / 694	549 / 694
MWEX / AHD-SLK	1524 / 664	1524 / 664
D602F / F601C	1804 / 1565	1804 / 1565
B10T / MH>SPC	166 / 61	166 / 61
OH E-W / OH>MH	189 / -196	189 / -196
R50M / OH>MP	157 / 150	157 / 150
G82R	-25	-25
Dorsey bipole / CU bipole	3242 / 1104	3242 / 1104
Dorsey Reserve / Wtrtn SVC	183 / 16	183 / 16
Forbes SVC / MSC	30 / 600	30 / 600
RCDC	0	0
Steady State Vltgs		
Dorsey 500/Dorsey 230	0.999 / 1.045	0.999 / 1.045
Roseau 500/Forbes 500	1.028 / 0.993	1.028 / 0.993
Chisago 500/EauClaire 345	1.002 / 1.002	1.002 / 1.002
Int Falls 115/Badoura 115	1.019 / 1.014	1.019 / 1.014
Drayton 230/Groton 345	1.021 / 1.013	1.021 / 1.013
SS OS Relay Margins		
D602F at Forbes/Dorsey	206% / 320%	206% / 320%
82R at Rugby/L20D at Drayton	999% / 877%	999% / 877%
R50M/F3M	785% / 323%	785% / 323%
B10T	330%	330%
Min/MaxTransientVltg		
Arrowhd 230	0.93 | 1.01	0.91 | 1.05
Boise 115	1.00 | 1.03	0.93 | 1.04
Dorsey 230	1.03 | 1.06	1.04 | 1.18
Forbes 230	0.97 | 1.02	0.97 | 1.03
Riverton 230	0.92 | 1.05	0.87 | 1.04
Coal Creek 230	0.96 | 1.13	0.94 | 1.10
Jamestown 345	0.77 | 1.10	0.83 | 1.07
Drayton 230	0.99 | 1.11	0.97 | 1.09
Groton 345	0.88 | 1.08	0.86 | 1.06
Minong 161	0.99 | 1.05	0.98 | 1.09
Wahpeton 115	0.87 | 1.10	0.84 | 1.08
Watertown 345	0.93 | 1.07	0.90 | 1.06
Dynamic Voltage Warnings		
	none	none
Worst Case Angle Damping		
Dorsey SUVP / UdHold	/ 0.166	/ 0.133
Forbes DC Red (DCAR)	368%	507%
K22W (max +dP @ t, d-ang)	17.5@(2.64165,-1.4)	125.7@(2.64165,-55.0)
K22W (max -dP @ t, d-ang)	18.9@(0.70000,3.3)	89.8@(0.23333,7.1)
K22W (max d-ang @ t, dP)	7.4@(1.09166,-11.4)	-57.0@(2.37499,121.4)
OS Rel Trip / Marg		
MH - OH		
D602F at Forbes/Dorsey	162% / 248%	0.18333 sec / 0.18333 sec
82R at Rugby/L20D at Drayton	999% / 628%	999% / 553%
R50M / F3M	619% / 264%	342% / 145%
B10T	147%	122%
FSCAPS (SS/Unav/Final)		
Balta 230	(0 | 1 | 0)	(0 | 2 | 0)
Eau Cl 345 / Park Lk 115	(3 | 3 | 3) / (0 | 0 | 0)	(3 | 3 | 1) / (0 | 0 | 0)
Prairie 115 / Ramsey 230	(1 | 6 | 1) / (0 | 2 | 1)	(1 | 5 | 1) / (0 | 1 | 1)
Roseau 230 / Running 230	(0 | 0 | 0) / (1 | 1 | 1)	(0 | 1 | 0) / (1 | 4 | 2)
Shey 115 / Split Rock 115	(2 | 5 | 1) / (1 | 2 | 2)	(2 | 5 | 2) / (1 | 2 | 2)
Damping Performance	N/A	N/A

Appendix E.8 - Simulation Summary Tables With GI-0616 and GI-0707A, Without GI-0619 (Case b34)

1	**Case No.**	1	2	3	4	5
2	**Case Name**	b34-so11aa-hb3	b34-so11aa-ac3	b34-so11aa-ag1	b34-so11aa-ag3	b34-so11aa-bl3
3	**Disturbance**	hb3	ac3	ag1	ag3	bl3
4	**Prior Outage**	None	None	None	None	None
5	**Date/Time**	DEC 03 2008 15:06	DEC 03 2008 14:39	DEC 03 2008 15:12	DEC 03 2008 14:42	DEC 03 2008 14:46
6	**Comments**					
7						
8	**Steady State Flows**					
9	NDEX / EAST BIAS	2079 / 349	2079 / 349	2079 / 349	2079 / 349	2079 / 349
10	MHEX / L20D	2174 / 237	2174 / 237	2174 / 237	2174 / 237	2174 / 237
11	ECL-ARP / PRI-BYN	550 / 693	550 / 693	550 / 693	550 / 693	550 / 693
12	MWEX / AHD-SLK	1524 / 664	1524 / 664	1524 / 664	1524 / 664	1524 / 664
13	D602F / F601C	1813 / 1565	1813 / 1565	1813 / 1565	1813 / 1565	1813 / 1565
14	B10T / MH>SPC	166 / 62	166 / 62	166 / 62	166 / 62	166 / 62
15	OH E-W / OH>MH	189 / -196	189 / -196	189 / -196	189 / -196	189 / -196
16	R50M / OH>MP	159 / 150	159 / 150	159 / 150	159 / 150	159 / 150
17	G82R	-35	-35	-35	-35	-35
18	Dorsey bipole / CU bipole	3245 / 1104	3245 / 1104	3245 / 1104	3245 / 1104	3245 / 1104
19	Dorsey Reserve / Wtrtn SVC	160 / 61	160 / 61	160 / 61	160 / 61	160 / 61
20	Forbes SVC / MSC	32 / 600	32 / 600	32 / 600	32 / 600	32 / 600
21	RCDC	0	0	0	0	0
22	**Steady State Vltgs**					
23	Dorsey 500/Dorsey 230	0.999 / 1.045	0.999 / 1.045	0.999 / 1.045	0.999 / 1.045	0.999 / 1.045
24	Roseau 500/Forbes 500	1.020 / 0.992	1.020 / 0.992	1.020 / 0.992	1.020 / 0.992	1.020 / 0.992
25	Chisago 500/EauClaire 345	1.001 / 1.002	1.001 / 1.002	1.001 / 1.002	1.001 / 1.002	1.001 / 1.002
26	Int Falls 115/Badoura 115	1.020 / 1.009	1.020 / 1.009	1.020 / 1.009	1.020 / 1.009	1.020 / 1.009
27	Drayton 230/Groton 345	1.014 / 0.995	1.014 / 0.995	1.014 / 0.995	1.014 / 0.995	1.014 / 0.995
28	**SS OS Relay Margins**					
29	D602F at Forbes/Dorsey	203% / 315%	203% / 315%	203% / 315%	203% / 315%	203% / 315%
30	82R at Rugby/L20D at Drayton	999% / 855%	999% / 855%	999% / 855%	999% / 855%	999% / 855%
31	R50M/F3M	772% / 325%	772% / 325%	772% / 325%	772% / 325%	772% / 325%
32	B10T	331%	331%	331%	331%	331%
33	**Min/MaxTransientVltg**					
34	Arrowhd 230	0.97 | 1.01	0.96 | 1.00	0.96 | 1.00	0.96 | 1.00	0.94 | 1.01
35	Boise 115	1.00 | 1.03	0.99 | 1.05	0.99 | 1.05	0.99 | 1.05	0.99 | 1.06
36	Dorsey 230	1.03 | 1.06	1.02 | 1.05	1.02 | 1.06	1.02 | 1.06	1.03 | 1.06
37	Forbes 230	0.98 | 1.02	0.98 | 1.01	0.98 | 1.01	0.98 | 1.01	0.97 | 1.04
38	Riverton 230	0.97 | 1.04	0.96 | 1.03	0.96 | 1.03	0.96 | 1.03	0.91 | 1.06
39	Coal Creek 230	0.97 | 1.12	0.95 | 1.12	0.96 | 1.12	0.96 | 1.12	1.00 | 1.11
40	Jamestown 345	0.94 | 1.06	0.92 | 1.05	0.93 | 1.06	0.92 | 1.05	0.80 | 1.09
41	Drayton 230	0.99 | 1.08	0.98 | 1.08	0.98 | 1.09	0.99 | 1.09	0.98 | 1.13
42	Groton 345	1.00 | 1.06	0.77 | 1.00	0.78 | 1.02	0.79 | 1.02	0.84 | 1.07
43	Minong 161	1.01 | 1.05	1.00 | 1.04	1.00 | 1.04	1.00 | 1.04	0.99 | 1.05
44	Wahpeton 115	0.95 | 1.07	0.92 | 1.06	0.92 | 1.07	0.92 | 1.06	0.84 | 1.10
45	Watertown 345	1.01 | 1.05	0.91 | 1.03	0.91 | 1.03	0.91 | 1.03	0.90 | 1.08
46	**Dynamic Voltage Warnings**					
47		none		none	none	
48						
49						
50						
51						
52						
53						
54	Worst Case Angle Damping					
55	Dorsey SUVP / UdHold					/ 0.150
56	Forbes DC Red (DCAR)	418%	405%	412%	415%	318%
57	K22W (max +dP @ t, d-ang)	11.4@(2.44777,-0.3)	11.6@(2.63542,-1.2)	2.1@(0.12927,-0.1)	11.2@(2.56453,-0.5)	20.3@(2.73550,-1.0)
58	K22W (max -dP @ t, d-ang)	14.6@(0.71724,3.6)	24.9@(0.85902,7.1)	23.0@(0.86736,6.3)	22.8@(0.82983,6.8)	22.2@(0.78813,2.5)
59	K22W (max d-ang @ t, dP)	5.0@(0.97161,-6.7)	9.6@(1.14675,-13.6)	8.6@(1.13841,-10.9)	8.8@(1.08837,-13.2)	6.1@(1.20513,-7.8)
60	**OS Rel Trip / Marg**					
61	MH - OH					
62	D602F at Forbes/Dorsey	162% / 248%	143% / 216%	145% / 220%	145% / 219%	148% / 225%
63	82R at Rugby/L20D at Drayton	999% / 664%	999% / 661%	999% / 656%	999% / 654%	999% / 584%
64	R50M / F3M	655% / 275%	597% / 270%	605% / 267%	605% / 267%	588% / 252%
65	B10T	186%	193%	185%	183%	121%
66	**FSCAPS (SS/Unav/Final)**					
67	Balta 230	(0 | 0 | 0)	(0 | 1 | 0)	(0 | 1 | 0)	(0 | 1 | 0)	(0 | 2 | 0)
68	Eau Cl 345 / Park Lk 115	(3 | 3 | 3) / (0 | 0 | 0)	(3 | 3 | 3) / (0 | 0 | 0)	(3 | 3 | 3) / (0 | 0 | 0)	(3 | 3 | 3) / (0 | 0 | 0)	(3 | 3 | 3) / (0 | 0 | 0)
69	Prairie 115 / Ramsey 230	(1 | 4 | 2) / (0 | 2 | 1)	(1 | 4 | 2) / (0 | 2 | 1)	(1 | 6 | 2) / (0 | 1 | 1)	(1 | 4 | 2) / (0 | 2 | 1)	(1 | 9 | 2) / (0 | 2 | 1)
70	Roseau 230 / Running 230	(0 | 0 | 0) / (1 | 1 | 1)	(0 | 1 | 1) / (1 | 2 | 2)	(0 | 1 | 1) / (1 | 2 | 2)	(0 | 1 | 1) / (1 | 2 | 2)	(0 | 1 | 1) / (1 | 2 | 1)
71	Shey 115 / Split Rock 115	(2 | 4 | 3) / (1 | 2 | 2)	(2 | 5 | 4) / (1 | 1 | 1)	(2 | 5 | 3) / (1 | 1 | 1)	(2 | 5 | 4) / (1 | 2 | 2)	(2 | 5 | 1) / (1 | 2 | 2)
72	**Damping Performance**	N/A	N/A	N/A	N/A	N/A

Appendix E.8 - Simulation Summary Tables With GI-0616 and GI-0707A, Without GI-0619 (Case b34)

1	**Case No.**	6	7	8	9	10
2	**Case Name**	b34-so11aa-ec3	b34-so11aa-ef3	b34-so11aa-ei2	b34-so11aa-evs	b34-so11aa-fds
3	**Disturbance**	ec3	ef3	ei2	evs	fds
4	**Prior Outage**	None	None	None	None	None
5	**Date/Time**	DEC 03 2008 14:49	DEC 03 2008 15:09	DEC 03 2008 14:53	DEC 03 2008 14:56	DEC 03 2008 14:59
6	**Comments**					
7						
8	**Steady State Flows**					
9	NDEX / EAST BIAS	2079 / 349	2079 / 349	2079 / 349	2079 / 349	2079 / 349
10	MHEX / L20D	2174 / 237	2174 / 237	2174 / 237	2174 / 237	2174 / 237
11	ECL-ARP / PRI-BYN	550 / 693	550 / 693	550 / 693	550 / 693	550 / 693
12	MWEX / AHD-SLK	1524 / 664	1524 / 664	1524 / 664	1524 / 664	1524 / 664
13	D602F / F601C	1813 / 1565	1813 / 1565	1813 / 1565	1813 / 1565	1813 / 1565
14	B10T / MH>SPC	166 / 62	166 / 62	166 / 62	166 / 62	166 / 62
15	OH E-W / OH>MH	189 / -196	189 / -196	189 / -196	189 / -196	189 / -196
16	R50M / OH>MP	159 / 150	159 / 150	159 / 150	159 / 150	159 / 150
17	G82R	-35	-35	-35	-35	-35
18	Dorsey bipole / CU bipole	3245 / 1104	3245 / 1104	3245 / 1104	3245 / 1104	3245 / 1104
19	Dorsey Reserve / Wtrtn SVC	160 / 61	160 / 61	160 / 61	160 / 61	160 / 61
20	Forbes SVC / MSC	32 / 600	32 / 600	32 / 600	32 / 600	32 / 600
21	RCDC	0	0	0	0	0
22	**Steady State Vltgs**					
23	Dorsey 500/Dorsey 230	0.999 / 1.045	0.999 / 1.045	0.999 / 1.045	0.999 / 1.045	0.999 / 1.045
24	Roseau 500/Forbes 500	1.020 / 0.992	1.020 / 0.992	1.020 / 0.992	1.020 / 0.992	1.020 / 0.992
25	Chisago 500/EauClaire 345	1.001 / 1.002	1.001 / 1.002	1.001 / 1.002	1.001 / 1.002	1.001 / 1.002
26	Int Falls 115/Badoura 115	1.020 / 1.009	1.020 / 1.009	1.020 / 1.009	1.020 / 1.009	1.020 / 1.009
27	Drayton 230/Groton 345	1.014 / 0.995	1.014 / 0.995	1.014 / 0.995	1.014 / 0.995	1.014 / 0.995
28	**SS OS Relay Margins**					
29	D602F at Forbes/Dorsey	203% / 315%	203% / 315%	203% / 315%	203% / 315%	203% / 315%
30	82R at Rugby/L20D at Drayton	999% / 855%	999% / 855%	999% / 855%	999% / 855%	999% / 855%
31	R50M/F3M	772% / 325%	772% / 325%	772% / 325%	772% / 325%	772% / 325%
32	B10T	331%	331%	331%	331%	331%
33	**Min/MaxTransientVltg**					
34	Arrowhd 230	0.94 | 1.01	0.93 | 1.01	0.92 | 1.03	0.98 | 1.03	0.94 | 1.01
35	Boise 115	1.00 | 1.05	0.99 | 1.06	0.97 | 1.05	0.99 | 1.05	1.00 | 1.03
36	Dorsey 230	1.03 | 1.06	1.02 | 1.07	1.02 | 1.07	1.02 | 1.06	1.03 | 1.06
37	Forbes 230	0.98 | 1.02	0.97 | 1.03	0.93 | 1.02	0.98 | 1.02	0.97 | 1.02
38	Riverton 230	0.93 | 1.05	0.90 | 1.05	0.88 | 1.05	0.92 | 1.04	0.93 | 1.05
39	Coal Creek 230	0.94 | 1.13	1.00 | 1.10	1.01 | 1.12	0.94 | 1.12	0.96 | 1.12
40	Jamestown 345	0.79 | 1.07	0.75 | 1.10	0.85 | 1.07	0.82 | 1.03	0.82 | 1.08
41	Drayton 230	0.99 | 1.13	0.95 | 1.13	0.93 | 1.09	0.99 | 1.12	0.99 | 1.11
42	Groton 345	0.88 | 1.03	0.73 | 1.08	0.83 | 1.06	0.83 | 1.03	0.87 | 1.03
43	Minong 161	0.99 | 1.05	0.98 | 1.06	0.99 | 1.07	1.02 | 1.06	0.99 | 1.05
44	Wahpeton 115	0.88 | 1.08	0.81 | 1.11	0.84 | 1.09	0.85 | 1.05	0.88 | 1.08
45	Watertown 345	0.93 | 1.04	0.83 | 1.08	0.88 | 1.07	0.89 | 1.04	0.93 | 1.05
46	**Dynamic Voltage Warnings**					
47		none		none	none	none
48						
49						
50						
51						
52						
53						
54	Worst Case Angle Damping					
55	Dorsey SUVP / UdHold	/ 0.171	/ 0.150		/ 0.162	/ 0.162
56	Forbes DC Red (DCAR)	385%	277%	507%	381%	380%
57	K22W (max +dP @ t, d-ang)	16.5@(2.58538,-2.2)	31.0@(2.96067,-3.3)	66.2@(2.71465,-30.8)	18.6@(2.63959,-5.4)	19.5@(2.61040,-2.8)
58	K22W (max -dP @ t, d-ang)	23.7@(0.69222,3.3)	33.7@(1.02999,6.4)	13.2@(0.70056,2.3)	26.8@(0.76728,3.5)	17.6@(0.65469,2.6)
59	K22W (max d-ang @ t, dP)	6.3@(1.04667,-11.6)	12.1@(1.38860,-12.9)	-33.4@(2.31850,63.4)	6.7@(1.14675,-18.5)	6.4@(1.07169,-9.5)
60	**OS Rel Trip / Marg**					
61	MH - OH					
62	D602F at Forbes/Dorsey	157% / 239%	151% / 230%	100% / 147%	143% / 216%	159% / 243%
63	82R at Rugby/L20D at Drayton	999% / 642%	999% / 457%	999% / 510%	999% / 690%	999% / 628%
64	R50M / F3M	602% / 263%	607% / 251%	533% / 211%	570% / 254%	607% / 265%
65	B10T	149%	89%	77%	186%	155%
66	**FSCAPS (SS/Unav/Final)**					
67	Balta 230	(0 | 3 | 0)	(0 | 1 | 0)	(0 | 1 | 0)	(0 | 2 | 0)	(0 | 1 | 0)
68	Eau Cl 345 / Park Lk 115	(3 | 3 | 3) / (0 | 0 | 0)	(3 | 3 | 3) / (0 | 0 | 0)	(3 | 3 | 2) / (0 | 0 | 0)	(3 | 3 | 3) / (0 | 0 | 0)	(3 | 3 | 3) / (0 | 0 | 0)
69	Prairie 115 / Ramsey 230	(1 | 5 | 1) / (0 | 2 | 0)	(1 | 8 | 1) / (0 | 2 | 1)	(1 | 7 | 1) / (0 | 2 | 1)	(1 | 6 | 2) / (0 | 2 | 1)	(1 | 5 | 2) / (0 | 2 | 1)
70	Roseau 230 / Running 230	(0 | 0 | 0) / (1 | 2 | 2)	(0 | 1 | 1) / (1 | 2 | 1)	(0 | 1 | 0) / (1 | 3 | 2)	(0 | 1 | 1) / (1 | 2 | 2)	(0 | 0 | 0) / (1 | 1 | 1)
71	Shey 115 / Split Rock 115	(2 | 5 | 3) / (1 | 1 | 1)	(2 | 5 | 1) / (1 | 2 | 2)	(2 | 5 | 1) / (1 | 2 | 2)	(2 | 5 | 5) / (1 | 2 | 2)	(2 | 5 | 2) / (1 | 2 | 2)
72	**Damping Performance**	N/A	N/A	N/A	N/A	N/A

Appendix E.8 - Simulation Summary Tables With GI-0616 and GI-0707A, Without GI-0619 (Case b34)

1	**Case No.**	11
2	**Case Name**	b34-so11aa-ha3
3	**Disturbance**	ha3
4	**Prior Outage**	None
5	**Date/Time**	DEC 03 2008 15:03
6	**Comments**	
7		
8	**Steady State Flows**	
9	NDEX / EAST BIAS	2079 / 349
10	MHEX / L20D	2174 / 237
11	ECL-ARP / PRI-BYN	550 / 693
12	MWEX / AHD-SLK	1524 / 664
13	D602F / F601C	1813 / 1565
14	B10T / MH>SPC	166 / 62
15	OH E-W / OH>MH	189 / -196
16	R50M / OH>MP	159 / 150
17	G82R	-35
18	Dorsey bipole / CU bipole	3245 / 1104
19	Dorsey Reserve / Wtrtn SVC	160 / 61
20	Forbes SVC / MSC	32 / 600
21	RCDC	0
22	**Steady State Vltgs**	
23	Dorsey 500/Dorsey 230	0.999 / 1.045
24	Roseau 500/Forbes 500	1.020 / 0.992
25	Chisago 500/EauClaire 345	1.001 / 1.002
26	Int Falls 115/Badoura 115	1.020 / 1.009
27	Drayton 230/Groton 345	1.014 / 0.995
28	**SS OS Relay Margins**	
29	D602F at Forbes/Dorsey	203% / 315%
30	82R at Rugby/L20D at Drayton	999% / 855%
31	R50M/F3M	772% / 325%
32	B10T	331%
33	**Min/MaxTransientVltg**	
34	Arrowhd 230	0.98 | 0.99
35	Boise 115	1.02 | 1.02
36	Dorsey 230	1.04 | 1.05
37	Forbes 230	1.00 | 1.00
38	Riverton 230	1.00 | 1.01
39	Coal Creek 230	1.02 | 1.05
40	Jamestown 345	0.99 | 1.00
41	Drayton 230	1.00 | 1.02
42	Groton 345	1.02 | 1.05
43	Minong 161	1.02 | 1.03
44	Wahpeton 115	1.00 | 1.02
45	Watertown 345	1.02 | 1.04
46	**Dynamic Voltage Warnings**	
47		none
48		
49		
50		
51		
52		
53		
54	Worst Case Angle Damping	
55	Dorsey SUVP / UdHold	
56	Forbes DC Red (DCAR)	496%
57	K22W (max +dP @ t, d-ang)	1.4@(0.12510,0.0)
58	K22W (max -dP @ t, d-ang)	6.4@(2.90229,1.0)
59	K22W (max d-ang @ t, dP)	1.4@(3.34014,-3.4)
60	**OS Rel Trip / Marg**	
61	MH - OH	
62	D602F at Forbes/Dorsey	190% / 295%
63	82R at Rugby/L20D at Drayton	999% / 828%
64	R50M / F3M	736% / 314%
65	B10T	318%
66	**FSCAPS (SS/Unav/Final)**	
67	Balta 230	(0 | 0 | 0)
68	Eau Cl 345 / Park Lk 115	(3 | 3 | 3) / (0 | 0 | 0)
69	Prairie 115 / Ramsey 230	(1 | 1 | 1) / (0 | 0 | 0)
70	Roseau 230 / Running 230	(0 | 0 | 0) / (1 | 1 | 1)
71	Shey 115 / Split Rock 115	(2 | 2 | 2) / (1 | 1 | 1)
72	**Damping Performance**	N/A

Appendix E.9 - Simulation Summary Tables With GI-0616 and GI-0707A, Without GI-0619, NDEX=2447 (Case b44)

1	**Case No.**	1	2	3	4	5
2	**Case Name**	b44-so11aa-ag1	b44-so11aa-ag3	b44-so11aa-ef3	b44-so11aa-ei2	b44-so11aa-eq1
3	**Disturbance**	ag1	ag3	ef3	ei2	eq1
4	**Prior Outage**	None	None	None	None	None
5	**Date/Time**	DEC 08 2008 11:41	DEC 08 2008 11:21	DEC 08 2008 11:27	DEC 08 2008 11:24	DEC 08 2008 11:43
6	**Comments**					
7						
8	**Steady State Flows**					
9	NDEX / EAST BIAS	2447 / 411	2447 / 411	2447 / 411	2447 / 411	2447 / 411
10	MHEX / L20D	2173 / 212	2173 / 212	2173 / 212	2173 / 212	2173 / 212
11	ECL-ARP / PRI-BYN	545 / 686	545 / 686	545 / 686	545 / 686	545 / 686
12	MWEX / AHD-SLK	1524 / 669	1524 / 669	1524 / 669	1524 / 669	1524 / 669
13	D602F / F601C	1851 / 1611	1851 / 1611	1851 / 1611	1851 / 1611	1851 / 1611
14	B10T / MH>SPC	166 / 62	166 / 62	166 / 62	166 / 62	166 / 62
15	OH E-W / OH>MH	189 / -196	189 / -196	189 / -196	189 / -196	189 / -196
16	R50M / OH>MP	162 / 150	162 / 150	162 / 150	162 / 150	162 / 150
17	G82R	-52	-52	-52	-52	-52
18	Dorsey bipole / CU bipole	3244 / 1103	3244 / 1103	3244 / 1103	3244 / 1103	3244 / 1103
19	Dorsey Reserve / Wtrtn SVC	95 / 101	95 / 101	95 / 101	95 / 101	95 / 101
20	Forbes SVC / MSC	43 / 600	43 / 600	43 / 600	43 / 600	43 / 600
21	RCDC	0	0	0	0	0
22	**Steady State Vltgs**					
23	Dorsey 500/Dorsey 230	1.002 / 1.045	1.002 / 1.045	1.002 / 1.045	1.002 / 1.045	1.002 / 1.045
24	Roseau 500/Forbes 500	1.019 / 0.985	1.019 / 0.985	1.019 / 0.985	1.019 / 0.985	1.019 / 0.985
25	Chisago 500/EauClaire 345	0.994 / 1.000	0.994 / 1.000	0.994 / 1.000	0.994 / 1.000	0.994 / 1.000
26	Int Falls 115/Badoura 115	1.020 / 1.007	1.020 / 1.007	1.020 / 1.007	1.020 / 1.007	1.020 / 1.007
27	Drayton 230/Groton 345	1.021 / 0.995	1.021 / 0.995	1.021 / 0.995	1.021 / 0.995	1.021 / 0.995
28	**SS OS Relay Margins**					
29	D602F at Forbes/Dorsey	191% / 297%	191% / 297%	191% / 297%	191% / 297%	191% / 297%
30	82R at Rugby/L20D at Drayton	999% / 994%	999% / 994%	999% / 994%	999% / 994%	999% / 994%
31	R50M/F3M	739% / 324%	739% / 324%	739% / 324%	739% / 324%	739% / 324%
32	B10T	328%	328%	328%	328%	328%
33	**Min/MaxTransientVltg**					
34	Arrowhd 230	0.95 | 0.99	0.95 | 1.00	0.92 | 1.01	0.89 | 1.03	0.94 | 1.02
35	Boise 115	0.99 | 1.05	0.99 | 1.05	1.00 | 1.07	0.97 | 1.05	1.00 | 1.04
36	Dorsey 230	1.02 | 1.06	1.02 | 1.06	1.01 | 1.07	1.01 | 1.07	1.03 | 1.06
37	Forbes 230	0.97 | 1.01	0.97 | 1.01	0.96 | 1.03	0.90 | 1.01	0.96 | 1.01
38	Riverton 230	0.96 | 1.04	0.96 | 1.04	0.88 | 1.06	0.84 | 1.05	0.92 | 1.05
39	Coal Creek 230	0.96 | 1.12	0.96 | 1.12	1.00 | 1.10	1.00 | 1.12	0.97 | 1.16
40	Jamestown 345	0.94 | 1.06	0.93 | 1.06	0.75 | 1.10	0.85 | 1.07	0.89 | 1.07
41	Drayton 230	0.99 | 1.09	0.99 | 1.09	0.96 | 1.12	0.94 | 1.10	1.01 | 1.08
42	Groton 345	0.82 | 1.02	0.83 | 1.02	0.76 | 1.08	0.84 | 1.05	0.88 | 1.05
43	Minong 161	0.99 | 1.04	0.99 | 1.04	0.97 | 1.05	0.97 | 1.07	1.00 | 1.06
44	Wahpeton 115	0.93 | 1.07	0.92 | 1.07	(0.58)0.79 | 1.11	0.81 | 1.09	0.88 | 1.08
45	Watertown 345	0.92 | 1.03	0.92 | 1.03	0.83 | 1.08	0.86 | 1.06	0.91 | 1.05
46	**Dynamic Voltage Warnings**					
47		none	none		none	none
48						
49						
50						
51						
52						
53						
54	Worst Case Angle Damping					
55	Dorsey SUVP / UdHold			/ 0.150		
56	Forbes DC Red (DCAR)	410%	390%	226%	507%	507%
57	K22W (max +dP @ t, d-ang)	2.1@(0.13344,-0.1)	6.5@(0.14595,0.0)	32.2@(2.99820,-2.3)	70.7@(2.88561,-31.5)	40.9@(2.00159,-20.8)
58	K22W (max -dP @ t, d-ang)	22.7@(0.84651,5.9)	21.5@(0.80481,6.4)	34.0@(1.07169,7.8)	19.7@(0.71724,3.7)	11.6@(0.65052,1.4)
59	K22W (max d-ang @ t, dP)	8.4@(1.12590,-10.0)	8.4@(1.06335,-11.8)	12.3@(1.38443,-16.7)	-34.5@(2.45611,66.3)	-20.8@(2.00159,40.9)
60	**OS Rel Trip / Marg**					
61	MH - OH					
62	D602F at Forbes/Dorsey	136% / 205%	135% / 204%	137% / 207%	85% / 124%	130% / 197%
63	82R at Rugby/L20D at Drayton	999% / 748%	999% / 748%	999% / 518%	244% / 567%	999% / 624%
64	R50M / F3M	580% / 266%	577% / 267%	579% / 249%	499% / 209%	609% / 245%
65	B10T	190%	188%	94%	80%	115%
66	**FSCAPS (SS/Unav/Final)**					
67	Balta 230	(0 | 1 | 0)	(0 | 1 | 0)	(0 | 2 | 0)	(0 | 1 | 0)	(0 | 2 | 0)
68	Eau Cl 345 / Park Lk 115	(3 | 3 | 3) / (0 | 0 | 0)	(3 | 3 | 3) / (0 | 0 | 0)	(3 | 3 | 3) / (0 | 0 | 0)	(3 | 3 | 2) / (0 | 0 | 0)	(3 | 3 | 3) / (0 | 0 | 0)
69	Prairie 115 / Ramsey 230	(1 | 4 | 1) / (0 | 1 | 1)	(1 | 4 | 1) / (0 | 2 | 1)	(1 |10 | 1) / (0 | 2 | 0)	(1 | 6 | 1) / (0 | 2 | 1)	(1 | 4 | 1) / (0 | 1 | 1)
70	Roseau 230 / Running 230	(0 | 1 | 1) / (1 | 2 | 2)	(0 | 1 | 1) / (1 | 2 | 2)	(0 | 1 | 0) / (1 | 2 | 1)	(0 | 2 | 1) / (1 | 3 | 2)	(0 | 1 | 1) / (1 | 2 | 2)
71	Shey 115 / Split Rock 115	(2 | 5 | 3) / (1 | 1 | 1)	(2 | 5 | 3) / (1 | 1 | 1)	(2 | 5 | 1) / (1 | 2 | 2)	(2 | 5 | 2) / (1 | 2 | 2)	(2 | 5 | 3) / (1 | 2 | 2)
72	**Damping Performance**	N/A	N/A	N/A	N/A	N/A

Appendix E.9 - Simulation Summary Tables With GI-0616 and GI-0707A, Without GI-0619, NDEX=2447 (Case b44)

1	**Case No.**	6	7	8	9	10
2	**Case Name**	b44-so11aa-fds	b44-so11aa-ha3	b44-so11aa-hb3	b44-so11aa-hc3	b44-so11aa-nmz
3	**Disturbance**	fds	ha3	hb3	hc3	nmz
4	**Prior Outage**	None	None	None	None	None
5	**Date/Time**	DEC 08 2008 11:30	DEC 08 2008 11:33	DEC 08 2008 11:36	DEC 08 2008 11:39	DEC 08 2008 11:45
6	**Comments**					
7						
8	**Steady State Flows**					
9	NDEX / EAST BIAS	2447 / 411	2447 / 411	2447 / 411	2447 / 411	2447 / 411
10	MHEX / L20D	2173 / 212	2173 / 212	2173 / 212	2173 / 212	2173 / 212
11	ECL-ARP / PRI-BYN	545 / 686	545 / 686	545 / 686	545 / 686	545 / 686
12	MWEX / AHD-SLK	1524 / 669	1524 / 669	1524 / 669	1524 / 669	1524 / 669
13	D602F / F601C	1851 / 1611	1851 / 1611	1851 / 1611	1851 / 1611	1851 / 1611
14	B10T / MH>SPC	166 / 62	166 / 62	166 / 62	166 / 62	166 / 62
15	OH E-W / OH>MH	189 / -196	189 / -196	189 / -196	189 / -196	189 / -196
16	R50M / OH>MP	162 / 150	162 / 150	162 / 150	162 / 150	162 / 150
17	G82R	-52	-52	-52	-52	-52
18	Dorsey bipole / CU bipole	3244 / 1103	3244 / 1103	3244 / 1103	3244 / 1103	3244 / 1103
19	Dorsey Reserve / Wtrtn SVC	95 / 101	95 / 101	95 / 101	95 / 101	95 / 101
20	Forbes SVC / MSC	43 / 600	43 / 600	43 / 600	43 / 600	43 / 600
21	RCDC	0	0	0	0	0
22	**Steady State Vltgs**					
23	Dorsey 500/Dorsey 230	1.002 / 1.045	1.002 / 1.045	1.002 / 1.045	1.002 / 1.045	1.002 / 1.045
24	Roseau 500/Forbes 500	1.019 / 0.985	1.019 / 0.985	1.019 / 0.985	1.019 / 0.985	1.019 / 0.985
25	Chisago 500/EauClaire 345	0.994 / 1.000	0.994 / 1.000	0.994 / 1.000	0.994 / 1.000	0.994 / 1.000
26	Int Falls 115/Badoura 115	1.020 / 1.007	1.020 / 1.007	1.020 / 1.007	1.020 / 1.007	1.020 / 1.007
27	Drayton 230/Groton 345	1.021 / 0.995	1.021 / 0.995	1.021 / 0.995	1.021 / 0.995	1.021 / 0.995
28	**SS OS Relay Margins**					
29	D602F at Forbes/Dorsey	191% / 297%	191% / 297%	191% / 297%	191% / 297%	191% / 297%
30	82R at Rugby/L20D at Drayton	999% / 994%	999% / 994%	999% / 994%	999% / 994%	999% / 994%
31	R50M/F3M	739% / 324%	739% / 324%	739% / 324%	739% / 324%	739% / 324%
32	B10T	328%	328%	328%	328%	328%
33	**Min/MaxTransientVltg**					
34	Arrowhd 230	0.93 | 1.01	0.98 | 0.99	0.96 | 1.00	0.97 | 0.98	0.89 | 1.04
35	Boise 115	1.01 | 1.06	1.01 | 1.02	0.99 | 1.05	1.01 | 1.02	0.93 | 1.04
36	Dorsey 230	1.03 | 1.06	1.04 | 1.05	1.03 | 1.06	1.04 | 1.05	1.04 | 1.20
37	Forbes 230	0.97 | 1.02	0.99 | 1.00	0.97 | 1.01	0.98 | 1.00	0.96 | 1.02
38	Riverton 230	0.92 | 1.05	1.00 | 1.01	0.97 | 1.04	0.99 | 1.00	0.85 | 1.04
39	Coal Creek 230	0.96 | 1.13	1.02 | 1.05	0.96 | 1.12	0.99 | 1.05	0.93 | 1.10
40	Jamestown 345	0.82 | 1.08	0.99 | 1.00	0.94 | 1.07	0.98 | 1.00	0.87 | 1.05
41	Drayton 230	0.99 | 1.11	1.01 | 1.02	0.99 | 1.09	0.99 | 1.03	0.98 | 1.09
42	Groton 345	0.89 | 1.04	1.01 | 1.08	1.00 | 1.06	1.03 | 1.05	0.86 | 1.03
43	Minong 161	0.98 | 1.04	1.02 | 1.03	1.00 | 1.04	1.01 | 1.03	0.96 | 1.09
44	Wahpeton 115	0.87 | 1.09	1.00 | 1.02	0.94 | 1.08	0.97 | 1.01	0.83 | 1.06
45	Watertown 345	0.92 | 1.05	1.02 | 1.04	1.00 | 1.05	1.02 | 1.04	0.87 | 1.05
46	**Dynamic Voltage Warnings**					
47		none	none	none	none	none
48						
49						
50						
51						
52						
53						
54	Worst Case Angle Damping					
55	Dorsey SUVP / UdHold	/ 0.162				/ 0.133
56	Forbes DC Red (DCAR)	346%	494%	397%	503%	507%
57	K22W (max +dP @ t, d-ang)	17.6@(2.64376,-3.1)	1.4@(0.12927,0.0)	7.2@(2.51032,0.3)	1.4@(0.12927,0.0)	136.5@(2.69380,-57.6)
58	K22W (max -dP @ t, d-ang)	22.2@(0.69639,2.6)	7.0@(2.92314,1.2)	16.5@(0.75060,4.4)	14.5@(2.10166,3.0)	94.4@(0.23352,7.5)
59	K22W (max d-ang @ t, dP)	6.3@(1.09254,-14.3)	1.6@(3.36099,-3.9)	5.9@(1.01331,-7.8)	3.9@(1.35941,-8.5)	-59.7@(2.41858,126.9)
60	**OS Rel Trip / Marg**					
61	MH - OH					
62	D602F at Forbes/Dorsey	147% / 224%	178% / 276%	148% / 227%	158% / 241%	0.18348 sec / 0.18348 sec
63	82R at Rugby/L20D at Drayton	999% / 725%	999% / 957%	999% / 759%	999% / 954%	999% / 563%
64	R50M / F3M	577% / 263%	702% / 313%	615% / 276%	640% / 301%	317% / 147%
65	B10T	160%	324%	189%	328%	134%
66	**FSCAPS (SS/Unav/Final)**					
67	Balta 230	(0 | 1 | 0)	(0 | 0 | 0)	(0 | 0 | 0)	(0 | 0 | 0)	(0 | 2 | 0)
68	Eau Cl 345 / Park Lk 115	(3 | 3 | 3) / (0 | 0 | 0)	(3 | 3 | 3) / (0 | 0 | 0)	(3 | 3 | 3) / (0 | 0 | 0)	(3 | 3 | 3) / (0 | 0 | 0)	(3 | 3 | 1) / (0 | 0 | 0)
69	Prairie 115 / Ramsey 230	(1 | 5 | 1) / (0 | 2 | 1)	(1 | 1 | 1) / (0 | 0 | 0)	(1 | 3 | 1) / (0 | 2 | 1)	(1 | 2 | 2) / (0 | 1 | 1)	(1 | 5 | 1) / (0 | 1 | 1)
70	Roseau 230 / Running 230	(0 | 1 | 1) / (1 | 2 | 2)	(0 | 0 | 0) / (1 | 1 | 1)	(0 | 1 | 1) / (1 | 2 | 2)	(0 | 0 | 0) / (1 | 1 | 1)	(0 | 2 | 0) / (1 | 4 | 2)
71	Shey 115 / Split Rock 115	(2 | 5 | 3) / (1 | 2 | 2)	(2 | 2 | 2) / (1 | 1 | 1)	(2 | 4 | 2) / (1 | 1 | 1)	(2 | 3 | 3) / (1 | 1 | 1)	(2 | 5 | 4) / (1 | 2 | 2)
72	**Damping Performance**	N/A	N/A	N/A	N/A	N/A

Appendix E.9 - Simulation Summary Tables With GI-0616 and GI-0707A, Without GI-0619, NDEX=2447 (Case b44)

1	**Case No.**	With 10 MVAr Switched
2	**Case Name**	Shunt at Wahpeton 115
3	**Disturbance**	ef3
4	**Prior Outage**	None
5	**Date/Time**	DEC 10 2008 11:11
6	**Comments**	
7		
8	**Steady State Flows**	
9	NDEX / EAST BIAS	2447 / 411
10	MHEX / L20D	2174 / 212
11	ECL-ARP / PRI-BYN	545 / 686
12	MWEX / AHD-SLK	1524 / 669
13	D602F / F601C	1851 / 1611
14	B10T / MH>SPC	166 / 62
15	OH E-W / OH>MH	189 / -196
16	R50M / OH>MP	162 / 150
17	G82R	-51
18	Dorsey bipole / CU bipole	3245 / 1104
19	Dorsey Reserve / Wtrtn SVC	94 / 101
20	Forbes SVC / MSC	43 / 600
21	RCDC	0
22	**Steady State Vltgs**	
23	Dorsey 500/Dorsey 230	1.002 / 1.045
24	Roseau 500/Forbes 500	1.020 / 0.985
25	Chisago 500/EauClaire 345	0.994 / 1.000
26	Int Falls 115/Badoura 115	1.020 / 1.008
27	Drayton 230/Groton 345	1.021 / 0.995
28	**SS OS Relay Margins**	
29	D602F at Forbes/Dorsey	191% / 297%
30	82R at Rugby/L20D at Drayton	999% / 993%
31	R50M/F3M	739% / 324%
32	B10T	328%
33	**Min/MaxTransientVltg**	
34	Arrowhd 230	0.92 | 1.01
35	Boise 115	0.99 | 1.07
36	Dorsey 230	1.01 | 1.07
37	Forbes 230	0.96 | 1.03
38	Riverton 230	0.88 | 1.06
39	Coal Creek 230	1.00 | 1.10
40	Jamestown 345	0.75 | 1.10
41	Drayton 230	0.96 | 1.12
42	Groton 345	0.76 | 1.08
43	Minong 161	0.98 | 1.05
44	Wahpeton 115	0.80 | 1.12
45	Watertown 345	0.83 | 1.08
46	**Dynamic Voltage Warnings**	
47		none
48		
49		
50		
51		
52		
53		
54	Worst Case Angle Damping	
55	Dorsey SUVP / UdHold	/ 0.150
56	Forbes DC Red (DCAR)	231%
57	K22W (max +dP @ t, d-ang)	32.5@(2.99820,-1.9)
58	K22W (max -dP @ t, d-ang)	33.6@(1.05084,7.2)
59	K22W (max d-ang @ t, dP)	12.3@(1.38860,-12.8)
60	**OS Rel Trip / Marg**	
61	MH - OH	
62	D602F at Forbes/Dorsey	135% / 205%
63	82R at Rugby/L20D at Drayton	999% / 523%
64	R50M / F3M	578% / 249%
65	B10T	97%
66	**FSCAPS (SS/Unav/Final)**	
67	Balta 230	(0 | 2 | 0)
68	Eau Cl 345 / Park Lk 115	(3 | 3 | 3) / (0 | 0 | 0)
69	Prairie 115 / Ramsey 230	(1 |10 | 1) / (0 | 2 | 0)
70	Roseau 230 / Running 230	(0 | 1 | 0) / (1 | 3 | 1)
71	Shey 115 / Split Rock 115	(2 | 5 | 1) / (1 | 2 | 2)
72	**Damping Performance**	N/A

Appendix E.10 - Simulation Summary Tables With GI-0616 and GI-0707A (Case c14)

1	**Case No.**	1	2	3	4
2	**Case Name**	c14-so11aa-ef3			
3	**Disturbance**	ef3			
4	**Prior Outage**	None			
5	**Date/Time**	JAN 22 2009 15:52			
6	**Comments**				
7					
8	**Steady State Flows**				
9	NDEX / EAST BIAS	2079 / 342			
10	MHEX / L20D	2174 / 238			
11	ECL-ARP / PRI-BYN	551 / 693			
12	MWEX / AHD-SLK	1524 / 663			
13	D602F / F601C	1809 / 1560			
14	B10T / MH>SPC	166 / 62			
15	OH E-W / OH>MH	189 / -196			
16	R50M / OH>MP	158 / 150			
17	G82R	-32			
18	Dorsey bipole / CU bipole	3245 / 1104			
19	Dorsey Reserve / Wtrtn SVC	167 / 50			
20	Forbes SVC / MSC	31 / 600			
21	RCDC	0			
22	**Steady State Vltgs**				
23	Dorsey 500/Dorsey 230	0.999 / 1.045			
24	Roseau 500/Forbes 500	1.016 / 0.993			
25	Chisago 500/EauClaire 345	1.002 / 1.002			
26	Int Falls 115/Badoura 115	1.021 / 1.009			
27	Drayton 230/Groton 345	1.013 / 1.002			
28	**SS OS Relay Margins**				
29	D602F at Forbes/Dorsey	204% / 317%			
30	82R at Rugby/L20D at Drayton	999% / 847%			
31	R50M/F3M	776% / 325%			
32	B10T	332%			
33	**Min/MaxTransientVltg**				
34	Arrowhd 230	0.92 | 1.02			
35	Boise 115	0.99 | 1.07			
36	Dorsey 230	1.01 | 1.07			
37	Forbes 230	0.97 | 1.03			
38	Riverton 230	0.89 | 1.05			
39	Coal Creek 230	1.01 | 1.09			
40	Jamestown 345	0.70 | 1.08			
41	Drayton 230	0.95 | 1.12			
42	Groton 345	0.71 | 1.09			
43	Minong 161	0.98 | 1.06			
44	Wahpeton 115	(0.66)0.79 | 1.11			
45	Watertown 345	0.81 | 1.09			
46	**Dynamic Voltage Warnings**				
47		none			
48					
49					
50					
51					
52					
53					
54	Worst Case Angle Damping				
55	Dorsey SUVP / UdHold	/ 0.150			
56	Forbes DC Red (DCAR)	268%			
57	K22W (max +dP @ t, d-ang)	34.4@(3.04998,-2.1)			
58	K22W (max -dP @ t, d-ang)	34.7@(1.00833,6.2)			
59	K22W (max d-ang @ t, dP)	13.8@(1.43333,-14.7)			
60	**OS Rel Trip / Marg**				
61	MH - OH				
62	D602F at Forbes/Dorsey	147% / 224%			
63	82R at Rugby/L20D at Drayton	999% / 423%			
64	R50M / F3M	609% / 252%			
65	B10T	72%			
66	**FSCAPS (SS/Unav/Final)**				
67	Balta 230	(0 | 2 | 0)			
68	Eau Cl 345 / Park Lk 115	(3 | 3 | 3) / (0 | 0 | 0)			
69	Prairie 115 / Ramsey 230	(1 |12 | 2) / (0 | 2 | 0)			
70	Roseau 230 / Running 230	(0 | 1 | 0) / (1 | 3 | 1)			
71	Shey 115 / Split Rock 115	(2 | 5 | 1) / (1 | 2 | 2)			
72	**Damping Performance**	N/A			

Appendix E.11 - Simulation Summary Tables With GI-0616 and GI-0707A (Case c64)

1	**Case No.**	1	2	3	4
2	**Case Name**	c64-so11aa-ef3			
3	**Disturbance**	ef3			
4	**Prior Outage**	None			
5	**Date/Time**	JAN 22 2009 15:23			
6	**Comments**				
7					
8	**Steady State Flows**				
9	NDEX / EAST BIAS	2079 / 346			
10	MHEX / L20D	2174 / 236			
11	ECL-ARP / PRI-BYN	551 / 693			
12	MWEX / AHD-SLK	1525 / 664			
13	D602F / F601C	1807 / 1560			
14	B10T / MH>SPC	166 / 61			
15	OH E-W / OH>MH	189 / -196			
16	R50M / OH>MP	158 / 150			
17	G82R	-27			
18	Dorsey bipole / CU bipole	3244 / 1104			
19	Dorsey Reserve / Wtrtn SVC	177 / 43			
20	Forbes SVC / MSC	30 / 600			
21	RCDC	0			
22	**Steady State Vltgs**				
23	Dorsey 500/Dorsey 230	0.999 / 1.045			
24	Roseau 500/Forbes 500	1.020 / 0.994			
25	Chisago 500/EauClaire 345	1.002 / 1.002			
26	Int Falls 115/Badoura 115	1.021 / 1.012			
27	Drayton 230/Groton 345	1.018 / 1.003			
28	**SS OS Relay Margins**				
29	D602F at Forbes/Dorsey	205% / 319%			
30	82R at Rugby/L20D at Drayton	999% / 865%			
31	R50M/F3M	780% / 325%			
32	B10T	331%			
33	**Min/MaxTransientVltg**				
34	Arrowhd 230	0.93 | 1.01			
35	Boise 115	0.99 | 1.07			
36	Dorsey 230	1.02 | 1.07			
37	Forbes 230	0.97 | 1.03			
38	Riverton 230	0.90 | 1.06			
39	Coal Creek 230	1.01 | 1.10			
40	Jamestown 345	0.74 | 1.08			
41	Drayton 230	0.96 | 1.14			
42	Groton 345	0.80 | 1.09			
43	Minong 161	0.98 | 1.05			
44	Wahpeton 115	0.82 | 1.11			
45	Watertown 345	0.87 | 1.09			
46	**Dynamic Voltage Warnings**				
47					
48					
49					
50					
51					
52					
53					
54	Worst Case Angle Damping				
55	Dorsey SUVP / UdHold	/ 0.150			
56	Forbes DC Red (DCAR)	289%			
57	K22W (max +dP @ t, d-ang)	22.5@(2.91665,0.5)			
58	K22W (max -dP @ t, d-ang)	28.6@(0.94166,4.1)			
59	K22W (max d-ang @ t, dP)	9.1@(1.30833,-7.9)			
60	**OS Rel Trip / Marg**				
61	MH - OH				
62	D602F at Forbes/Dorsey	153% / 234%			
63	82R at Rugby/L20D at Drayton	999% / 504%			
64	R50M / F3M	612% / 253%			
65	B10T	110%			
66	**FSCAPS (SS/Unav/Final)**				
67	Balta 230	(0 | 1 | 0)			
68	Eau Cl 345 / Park Lk 115	(3 | 3 | 3) / (0 | 0 | 0)			
69	Prairie 115 / Ramsey 230	(1 |11 | 2) / (0 | 2 | 0)			
70	Roseau 230 / Running 230	(0 | 1 | 1) / (1 | 2 | 1)			
71	Shey 115 / Split Rock 115	(2 | 5 | 1) / (1 | 2 | 2)			
72	**Damping Performance**	N/A			

APPENDIX F – CONSTRAINED INTERFACE ANALYSIS RESULTS

Appendix F.1: Constrained Interface Analysis – With GI-0619
Case a02 (Without GI-0616 & GI-0707A) vs. a04 (With GI-0616 & GI-0707A)

```
***** BASE CASE:
A02-SP11AA.SAV;SUMMER;PK LD;SYSTEM INTACT           :
ND=1298,MH=1303,MW=842,OHMH=0,OHMP=151,EWTW=-120,BD=167

***** ERROR: GETTING LINE FLOW  67160 TO  67105 CKT 1 IERR= 2

***** CHNG CASE:
A04-SP11AA.SAV;SUMMER;PK LD;SYSTEM INTACT           :
ND=1601,MH=1307,MW=895,OHMH=0,OHMP=150,EWTW=-120,BD=165


***** BASE TRANSACTION AMOUNT FOR DF CALCULATION:   368.000


## PTDF INTERFACES ##

39247 ARCADN3   - 36420 ZION ; B   BASE:   -12.4 CHNG:     2.6 DIFF:  -121.1%

SUBTOTALS FOR: ADNZIO__PTDF        BASE:   -12.4 CHNG:     2.6 DIFF:  -121.1%
                                                 DIFF:    15.0   DF:     4.1%
*******************************************************************************

36407 WEMPL; R  - 39058 PAD 345    BASE:   273.3 CHNG:   269.7 DIFF:    -1.3%

SUBTOTALS FOR: WEMPAD__PTDF        BASE:   273.3 CHNG:   269.7 DIFF:    -1.3%
                                                 DIFF:    -3.5   DF:    -1.0%
*******************************************************************************

60304 EAU CL 3  - 39244 ARP 345    BASE:   363.0 CHNG:   395.4 DIFF:     8.9%

SUBTOTALS FOR: EAUARP__PTDF        BASE:   363.0 CHNG:   395.4 DIFF:     8.9%
                                                 DIFF:    32.4   DF:     8.8%
*******************************************************************************

69503 CASVILL5  - 39010 NED 161    BASE:   114.2 CHNG:   113.6 DIFF:    -0.5%

SUBTOTALS FOR: CSVNED__PTDF        BASE:   114.2 CHNG:   113.6 DIFF:    -0.5%
                                                 DIFF:    -0.6   DF:    -0.2%
*******************************************************************************

36406 WEMPL; B  - 39119 ROE 345    BASE:   510.9 CHNG:   501.1 DIFF:    -1.9%

SUBTOTALS FOR: WEMROE__PTDF        BASE:   510.9 CHNG:   501.1 DIFF:    -1.9%
                                                 DIFF:    -9.9   DF:    -2.7%
*******************************************************************************

31230 MONTGMRY  - 31992 SPENCER    BASE:   352.5 CHNG:   335.3 DIFF:    -4.9%

SUBTOTALS FOR: MTGSPC__PTDF        BASE:   352.5 CHNG:   335.3 DIFF:    -4.9%
                                                 DIFF:   -17.2   DF:    -4.7%
*******************************************************************************

31408 OVERTON   - 59201 SIBLEY 7   BASE:    -5.4 CHNG:   -24.1 DIFF:   348.9%

SUBTOTALS FOR: OVESIB__PTDF        BASE:    -5.4 CHNG:   -24.1 DIFF:   348.9%
                                                 DIFF:   -18.8   DF:    -5.1%
*******************************************************************************

39249 ALBRS-12  - 39410 PARIS WE   BASE:    71.8 CHNG:    68.3 DIFF:    -4.9%

SUBTOTALS FOR: ALBPRS__PTDF        BASE:    71.8 CHNG:    68.3 DIFF:    -4.9%
                                                 DIFF:    -3.5   DF:    -0.9%
*******************************************************************************

39253 ARCADN1   - 39329 GRANVL1    BASE:     3.5 CHNG:   -14.6 DIFF:  -522.6%
```

```
SUBTOTALS FOR: ARCGVL__PTDF        BASE:     3.5 CHNG:   -14.6 DIFF:  -522.6%
                                               DIFF:   -18.1   DF:    -4.9%
*******************************************************************************

38894 N APP 3   - 38928 WERNER W   BASE:   195.3 CHNG:   160.8 DIFF:   -17.7%

SUBTOTALS FOR: NAPRRN__PTDF        BASE:   195.3 CHNG:   160.8 DIFF:   -17.7%
                                               DIFF:   -34.5   DF:    -9.4%
*******************************************************************************

38849 PLS PR2   - 36421 ZION ; R   BASE:   614.6 CHNG:   643.6 DIFF:     4.7%

SUBTOTALS FOR: PLPZION_PTDF        BASE:   614.6 CHNG:   643.6 DIFF:     4.7%
                                               DIFF:    29.0   DF:     7.9%
*******************************************************************************

36420 ZION ; B  - 39247 ARCADN3    BASE:    12.5 CHNG:    -2.5 DIFF:  -120.1%

SUBTOTALS FOR: ZIOARC__PTDF        BASE:    12.5 CHNG:    -2.5 DIFF:  -120.1%
                                               DIFF:   -15.0   DF:    -4.1%
*******************************************************************************

36421 ZION ; R  - 38849 PLS PR2    BASE:  -613.2 CHNG:  -642.0 DIFF:     4.7%

SUBTOTALS FOR: ZIOPLP__PTDF        BASE:  -613.2 CHNG:  -642.0 DIFF:     4.7%
                                               DIFF:   -28.9   DF:    -7.8%
*******************************************************************************

34093 ARNOLD 3  - 34018 HAZLTON3   BASE:   140.1 CHNG:   119.9 DIFF:   -14.4%

SUBTOTALS FOR: ARNHAZ__PTDF        BASE:   140.1 CHNG:   119.9 DIFF:   -14.4%
                                               DIFF:   -20.2   DF:    -5.5%
*******************************************************************************

36382 QUAD ;    - 34036 ROCK CK3   BASE:   609.5 CHNG:   586.7 DIFF:    -3.8%
64400 MECCORD3  - 64403 E MOLIN3   BASE:   314.0 CHNG:   303.1 DIFF:    -3.5%

SUBTOTALS FOR: QUARCKCORMOL        BASE:   923.6 CHNG:   889.7 DIFF:    -3.7%
                                               DIFF:   -33.9   DF:    -9.2%
*******************************************************************************

34036 ROCK CK3  - 34037 ROCK CK5   BASE:   219.8 CHNG:   218.2 DIFF:    -0.7%

SUBTOTALS FOR: RCKXFM__PTDF        BASE:   219.8 CHNG:   218.2 DIFF:    -0.7%
                                               DIFF:    -1.6   DF:    -0.4%
*******************************************************************************

36382 QUAD ;    - 34036 ROCK CK3   BASE:   609.5 CHNG:   586.7 DIFF:    -3.8%

SUBTOTALS FOR: QUARCK__PTDF        BASE:   609.5 CHNG:   586.7 DIFF:    -3.8%
                                               DIFF:   -22.9   DF:    -6.2%
*******************************************************************************

67105 LELANDO3  - 66506 FTTHOMP3   BASE:   246.9 CHNG:   285.9 DIFF:    15.8%
67105 LELANDO3  - 67160 GROTON 3   BASE:     0.0 CHNG:     0.0 DIFF:   999.0%
67615  GI-0619  - 67160 GROTON 3   BASE:   432.4 CHNG:   590.0 DIFF:    36.4%
67101 ANTELOP3  - 67120 BRDLAND3   BASE:   269.0 CHNG:   295.5 DIFF:     9.9%
63314 BIGSTON4  - 66503 BLAIR  4   BASE:   117.7 CHNG:   115.9 DIFF:    -1.6%
66554 MORRIS 4  - 66550 GRANITF4   BASE:   -16.9 CHNG:   -12.2 DIFF:   -27.7%
63336 AUDUBON4  - 63053 HUBBARD4   BASE:   146.1 CHNG:   159.7 DIFF:     9.3%
66521 SULLYBT4  - 66519 OAHE   4   BASE:   -31.4 CHNG:   -18.0 DIFF:   -42.6%
63052 INMAN  4  - 61611 WINGRIV4   BASE:   135.5 CHNG:   148.3 DIFF:     9.4%
66470 BISON  4  - 66497 MAURINE4   BASE:    16.0 CHNG:    29.8 DIFF:    86.3%
66716 LAPORTE7  - 61638 AKELEY7    BASE:    28.3 CHNG:    30.0 DIFF:     6.2%
63222 ALEXAND7  - 60144 DGLASCO7   BASE:    39.9 CHNG:    43.0 DIFF:     7.9%
67327 ELLENDL7  - 67401 ABDNJCT7   BASE:    10.8 CHNG:     5.1 DIFF:   -52.7%
66432 EDGELEY7  - 66534 ORDWAY 7   BASE:   -17.0 CHNG:   -22.5 DIFF:    31.8%
66438 FORMAN 7  - 66522 SUMMIT-7   BASE:   -23.1 CHNG:   -25.2 DIFF:     9.3%
63211 CANBY  7  - 66551 GRANITF7   BASE:    27.3 CHNG:    29.4 DIFF:     7.7%
62006 KERKHO 7  - 62005 KERKHOT7   BASE:    -2.2 CHNG:    -1.1 DIFF:   -51.5%
66752 DRAYTON4  - 67557 LETELER4   BASE:  -146.6 CHNG:  -135.7 DIFF:    -7.4%
```

```
63379 RUGBY  4  - 67523 GLENBOR4   BASE:   115.4 CHNG:   133.9 DIFF:    16.0%
62001 BENSON 7  - 60374 FIBROMN7   BASE:   -50.0 CHNG:   -50.0 DIFF:     0.0%

SUBTOTALS FOR: NDEX                BASE:  1298.2 CHNG:  1601.9 DIFF:    23.4%
                                          DIFF:   303.8   DF:    82.5%
*******************************************************************************

60105 PR ISLD3  - 61950 BYRON  3   BASE:   180.6 CHNG:   217.0 DIFF:    20.1%
60304 EAU CL 3  - 39244 ARP 345    BASE:   363.0 CHNG:   395.4 DIFF:     8.9%

SUBTOTALS FOR: MWSI                BASE:   543.6 CHNG:   612.4 DIFF:    12.7%
                                          DIFF:    68.8   DF:    18.7%
*******************************************************************************

64832 GENTLMN4  - 64909 N.PLATT4   BASE:   177.0 CHNG:   176.8 DIFF:    -0.1%
64832 GENTLMN4  - 64909 N.PLATT4   BASE:   177.5 CHNG:   177.4 DIFF:    -0.1%
64832 GENTLMN4  - 64909 N.PLATT4   BASE:   181.5 CHNG:   181.3 DIFF:    -0.1%
64831 GENTLMN3  - 64984 SWEET W3   BASE:   283.7 CHNG:   282.8 DIFF:    -0.3%
64831 GENTLMN3  - 64984 SWEET W3   BASE:   342.4 CHNG:   341.3 DIFF:    -0.3%
64831 GENTLMN3  - 64943 REDWILO3   BASE:   354.2 CHNG:   369.3 DIFF:     4.3%

SUBTOTALS FOR: GGS                 BASE:  1516.2 CHNG:  1528.9 DIFF:     0.8%
                                          DIFF:    12.7   DF:     3.4%
*******************************************************************************

64831 GENTLMN3  - 64943 REDWILO3   BASE:   354.2 CHNG:   369.3 DIFF:     4.3%

SUBTOTALS FOR: WNE_WKS             BASE:   354.2 CHNG:   369.3 DIFF:     4.3%
                                          DIFF:    15.1   DF:     4.1%
*******************************************************************************

64933 PAULINE3  - 64902 MOORE  3   BASE:    89.5 CHNG:    97.5 DIFF:     9.0%
64839 GR ISLD4  - 64780 COLMB.W4   BASE:    74.9 CHNG:    73.3 DIFF:    -2.0%
66571 GR ISLD3  - 64896 MCCOOL 3   BASE:   231.1 CHNG:   250.3 DIFF:     8.3%

SUBTOTALS FOR: GRIS_LNC            BASE:   395.4 CHNG:   421.2 DIFF:     6.5%
                                          DIFF:    25.8   DF:     7.0%
*******************************************************************************

64786 COOPER 3  - 59393 ST JOE 3   BASE:   207.1 CHNG:   241.7 DIFF:    16.7%
64786 COOPER 3  - 96039 7FAIRPT    BASE:   185.5 CHNG:   209.7 DIFF:    13.1%

SUBTOTALS FOR: COOPER_S            BASE:   392.6 CHNG:   451.4 DIFF:    15.0%
                                          DIFF:    58.8   DF:    16.0%
*******************************************************************************

60105 PR ISLD3  - 61950 BYRON  3   BASE:   180.6 CHNG:   217.0 DIFF:    20.1%

SUBTOTALS FOR: PR_ISL_BYRON        BASE:   180.6 CHNG:   217.0 DIFF:    20.1%
                                          DIFF:    36.4   DF:     9.9%
*******************************************************************************

65351 S3451  3  - 65354 S3454  3   BASE:    82.1 CHNG:    93.8 DIFF:    14.2%
65351 S3451  3  - 65359 S3459  3   BASE:   133.8 CHNG:   152.5 DIFF:    13.9%
65451 S1251  5  - 65497 S1297  5   BASE:    46.2 CHNG:    49.8 DIFF:     7.7%

SUBTOTALS FOR: FTCAL_S             BASE:   262.2 CHNG:   296.1 DIFF:    12.9%
                                          DIFF:    33.8   DF:     9.2%
*******************************************************************************

36382 QUAD ;    - 64405 SUB 91 3   BASE:   447.3 CHNG:   429.5 DIFF:    -4.0%
64400 MECCORD3  - 64403 E MOLIN3   BASE:   314.0 CHNG:   303.1 DIFF:    -3.5%

SUBTOTALS FOR: QUADCITY_W          BASE:   761.3 CHNG:   732.5 DIFF:    -3.8%
                                          DIFF:   -28.8   DF:    -7.8%
*******************************************************************************

64095 MNTZUMA3  - 64064 BONDRNT3   BASE:   -93.1 CHNG:  -127.3 DIFF:    36.8%

SUBTOTALS FOR: MNTZUMA_W           BASE:   -93.1 CHNG:  -127.3 DIFF:    36.8%
                                          DIFF:   -34.3   DF:    -9.3%
```

```
*******************************************************************************

59394 ST JOE 5  - 59392 MIDWAY 5   BASE:    85.7 CHNG:    81.7 DIFF:    -4.7%

SUBTOTALS FOR: SJOMDY__PTDF        BASE:    85.7 CHNG:    81.7 DIFF:    -4.7%
                                                DIFF:    -4.0   DF:    -1.1%
*******************************************************************************

57982 IATAN  7  - 59393 ST JOE 3   BASE:   299.7 CHNG:   276.8 DIFF:    -7.7%

SUBTOTALS FOR: IATSJO__PTDF        BASE:   299.7 CHNG:   276.8 DIFF:    -7.7%
                                                DIFF:   -22.9   DF:    -6.2%
*******************************************************************************

64352 TIFFIN 3  - 34093 ARNOLD 3   BASE:   181.8 CHNG:   160.0 DIFF:   -12.0%

SUBTOTALS FOR: TIFARN__PTDF        BASE:   181.8 CHNG:   160.0 DIFF:   -12.0%
                                                DIFF:   -21.8   DF:    -5.9%
*******************************************************************************

60101 FORBES 2  - 60198 CHIS-N 2   BASE:   901.5 CHNG:   936.7 DIFF:     3.9%

SUBTOTALS FOR: FORCHS_PTDF         BASE:   901.5 CHNG:   936.7 DIFF:     3.9%
                                                DIFF:    35.2   DF:     9.6%
*******************************************************************************

34006 LAKEFLD3  - 60331 LKFLDXL3   BASE:   443.5 CHNG:   455.7 DIFF:     2.8%

SUBTOTALS FOR: LKFLKG__PTDF        BASE:   443.5 CHNG:   455.7 DIFF:     2.8%
                                                DIFF:    12.2   DF:     3.3%
*******************************************************************************


## OTDF INTERFACES ##

36382 QUAD ;    - 36368 H471 ;     *CONTINGENCY* BASE:     0.0 CHNG:     0.0
-------------------------------------------------------------------------------
36284 CORDO; B  - 36362 NELSO; B   BASE:   730.8 CHNG:   774.6 DIFF:     6.0%

SUBTOTALS FOR: CDVNELQUA471        BASE:   730.8 CHNG:   774.6 DIFF:     6.0%
                                                DIFF:    43.8   DF:    11.9%
*******************************************************************************

38849 PLS PR2   - 36421 ZION ; R   *CONTINGENCY* BASE:     0.0 CHNG:     0.0
-------------------------------------------------------------------------------
39247 ARCADN3   - 36420 ZION ; B   BASE:   285.8 CHNG:   315.2 DIFF:    10.3%

SUBTOTALS FOR: ADNZIOPLPZIO        BASE:   285.8 CHNG:   315.2 DIFF:    10.3%
                                                DIFF:    29.4   DF:     8.0%
*******************************************************************************

38849 PLS PR2   - 36421 ZION ; R   *CONTINGENCY* BASE:     0.0 CHNG:     0.0
-------------------------------------------------------------------------------
39362 LAKEVIEW  - 37384 ZION ;     BASE:   134.1 CHNG:   142.2 DIFF:     6.1%

SUBTOTALS FOR: LKVZIOZIOPLP        BASE:   134.1 CHNG:   142.2 DIFF:     6.1%
                                                DIFF:     8.1   DF:     2.2%
*******************************************************************************

36406 WEMPL; B  - 39119 ROE 345    *CONTINGENCY* BASE:     0.0 CHNG:     0.0
-------------------------------------------------------------------------------
60304 EAU CL 3  - 39244 ARP 345    BASE:   396.1 CHNG:   427.9 DIFF:     8.0%

SUBTOTALS FOR: EAUARPWMPPAD        BASE:   396.1 CHNG:   427.9 DIFF:     8.0%
                                                DIFF:    31.8   DF:     8.6%
*******************************************************************************

36406 WEMPL; B  - 39119 ROE 345    *CONTINGENCY* BASE:     0.0 CHNG:     0.0
-------------------------------------------------------------------------------
39058 PAD 345   - 39059 PAD 138    BASE:   474.5 CHNG:   467.3 DIFF:    -1.5%
```

```
SUBTOTALS FOR: PADXFMWEMROE        BASE:   474.5 CHNG:   467.3 DIFF:    -1.5%
                                               DIFF:    -7.2   DF:    -2.0%
*******************************************************************************

36407 WEMPL; R  - 39058 PAD 345    *CONTINGENCY* BASE:     0.0 CHNG:     0.0
-------------------------------------------------------------------------------
39010 NED 161   - 39020 NLD 1      BASE:     0.0 CHNG:     0.0 DIFF:   999.0%

SUBTOTALS FOR: NED_T1WEMPAD        BASE:     0.0 CHNG:     0.0 DIFF:   999.0%
                                               DIFF:     0.0   DF:     0.0%
*******************************************************************************

60304 EAU CL 3  - 39244 ARP 345    *CONTINGENCY* BASE:     0.0 CHNG:     0.0
-------------------------------------------------------------------------------
39010 NED 161   - 39020 NLD 1      BASE:     0.0 CHNG:     0.0 DIFF:   999.0%

SUBTOTALS FOR: NED_T1EARP_G        BASE:     0.0 CHNG:     0.0 DIFF:   999.0%
                                               DIFF:     0.0   DF:     0.0%
*******************************************************************************

60105 PR ISLD3  - 61950 BYRON  3   *CONTINGENCY* BASE:     0.0 CHNG:     0.0
-------------------------------------------------------------------------------
60304 EAU CL 3  - 39244 ARP 345    BASE:   381.3 CHNG:   417.4 DIFF:     9.5%

SUBTOTALS FOR: EAUARPPRIBYR        BASE:   381.3 CHNG:   417.4 DIFF:     9.5%
                                               DIFF:    36.1   DF:     9.8%
*******************************************************************************

39059 PAD 138   - 39141 TOWNLINE   *CONTINGENCY* BASE:     0.0 CHNG:     0.0
-------------------------------------------------------------------------------
39059 PAD 138   - 38057 NWT 138    BASE:   190.3 CHNG:   187.9 DIFF:    -1.3%
38057 NWT 138   - 39048 BLK 138    BASE:   125.7 CHNG:   123.5 DIFF:    -1.7%

SUBTOTALS FOR: PADBLKPADTLR        BASE:   316.0 CHNG:   311.4 DIFF:    -1.4%
                                               DIFF:    -4.6   DF:    -1.2%
*******************************************************************************

39059 PAD 138   - 39141 TOWNLINE   *CONTINGENCY* BASE:     0.0 CHNG:     0.0
-------------------------------------------------------------------------------
39048 BLK 138   - 39060 COR 138    BASE:   147.0 CHNG:   144.9 DIFF:    -1.4%

SUBTOTALS FOR: BLKCORPADTLR        BASE:   147.0 CHNG:   144.9 DIFF:    -1.4%
                                               DIFF:    -2.1   DF:    -0.6%
*******************************************************************************

36406 WEMPL; B  - 39119 ROE 345    *CONTINGENCY* BASE:     0.0 CHNG:     0.0
-------------------------------------------------------------------------------
39090 RSS 138   - 39120 ROE 138    BASE:   231.0 CHNG:   225.9 DIFF:    -2.2%

SUBTOTALS FOR: RSSROEWEMROE        BASE:   231.0 CHNG:   225.9 DIFF:    -2.2%
                                               DIFF:    -5.0   DF:    -1.4%
*******************************************************************************

39676 GARDR PK  - 39785 ROCKY RN   *CONTINGENCY* BASE:     0.0 CHNG:     0.0
-------------------------------------------------------------------------------
39786 ROCKY RN  - 39788 NORTHPT    BASE:     0.0 CHNG:     0.0 DIFF:   999.0%

SUBTOTALS FOR: RRNNPTRRNGPK        BASE:     0.0 CHNG:     0.0 DIFF:   999.0%
                                               DIFF:     0.0   DF:     0.0%
*******************************************************************************

36406 WEMPL; B  - 39119 ROE 345    *CONTINGENCY* BASE:     0.0 CHNG:     0.0
-------------------------------------------------------------------------------
39048 BLK 138   - 39060 COR 138    BASE:   184.4 CHNG:   182.4 DIFF:    -1.1%

SUBTOTALS FOR: BLKCRDWEMROE        BASE:   184.4 CHNG:   182.4 DIFF:    -1.1%
                                               DIFF:    -2.1   DF:    -0.6%
*******************************************************************************

39059 PAD 138   - 38057 NWT 138    *CONTINGENCY* BASE:     0.0 CHNG:     0.0
```

```
-------------------------------------------------------------------------------
39059 PAD 138   - 39141 TOWNLINE   BASE:   156.0 CHNG:   153.3 DIFF:    -1.7%

SUBTOTALS FOR: PADTLRPADBLK        BASE:   156.0 CHNG:   153.3 DIFF:    -1.7%
                                               DIFF:    -2.7   DF:    -0.7%
*******************************************************************************

39119 ROE 345   - 39120 ROE 138    *CONTINGENCY* BASE:     0.0 CHNG:     0.0
-------------------------------------------------------------------------------
39119 ROE 345   - 39120 ROE 138    BASE:   198.8 CHNG:   197.5 DIFF:    -0.6%

SUBTOTALS FOR: ROE_T2ROE_T3        BASE:   198.8 CHNG:   197.5 DIFF:    -0.6%
                                               DIFF:    -1.3   DF:    -0.3%
*******************************************************************************

39058 PAD 345   - 39059 PAD 138    *CONTINGENCY* BASE:     0.0 CHNG:     0.0
-------------------------------------------------------------------------------
39119 ROE 345   - 39120 ROE 138    BASE:   240.5 CHNG:   238.7 DIFF:    -0.8%

SUBTOTALS FOR: RKDLFLOPADDK        BASE:   240.5 CHNG:   238.7 DIFF:    -0.8%
                                               DIFF:    -1.8   DF:    -0.5%
*******************************************************************************

39244 ARP 345   - 39785 ROCKY RN   *CONTINGENCY* BASE:     0.0 CHNG:     0.0
-------------------------------------------------------------------------------
60315 T-CRNRS7  - 39706 WIEN       BASE:   -20.2 CHNG:   -14.1 DIFF:   -30.1%

SUBTOTALS FOR: TCRWIEARPRRN        BASE:   -20.2 CHNG:   -14.1 DIFF:   -30.1%
                                               DIFF:     6.1   DF:     1.7%
*******************************************************************************

60304 EAU CL 3  - 39244 ARP 345    *CONTINGENCY* BASE:     0.0 CHNG:     0.0
-------------------------------------------------------------------------------
60315 T-CRNRS7  - 39706 WIEN       BASE:    26.3 CHNG:    35.1 DIFF:    33.5%

SUBTOTALS FOR: TCRWIEEARP_G        BASE:    26.3 CHNG:    35.1 DIFF:    33.5%
                                               DIFF:     8.8   DF:     2.4%
*******************************************************************************

36406 WEMPL; B  - 39119 ROE 345    *CONTINGENCY* BASE:     0.0 CHNG:     0.0
-------------------------------------------------------------------------------
39059 PAD 138   - 39141 TOWNLINE   BASE:   165.4 CHNG:   161.2 DIFF:    -2.5%

SUBTOTALS FOR: PADTLRWEMROE        BASE:   165.4 CHNG:   161.2 DIFF:    -2.5%
                                               DIFF:    -4.1   DF:    -1.1%
*******************************************************************************

30395 COFFEEN   - 31445 PANA       *CONTINGENCY* BASE:     0.0 CHNG:     0.0
31445 PANA      - 36343 KINCA; R   *CONTINGENCY* BASE:     0.0 CHNG:     0.0
-------------------------------------------------------------------------------
31230 MONTGMRY  - 31992 SPENCER    BASE:   376.8 CHNG:   359.5 DIFF:    -4.6%

SUBTOTALS FOR: MTGSPCCOFPAN        BASE:   376.8 CHNG:   359.5 DIFF:    -4.6%
                                               DIFF:   -17.3   DF:    -4.7%
*******************************************************************************

30154 BLAND     - 96041 7FRANKS    *CONTINGENCY* BASE:     0.0 CHNG:     0.0
-------------------------------------------------------------------------------
31088 MCCREDIE  - 31408 OVERTON    BASE:   224.5 CHNG:   207.9 DIFF:    -7.4%

SUBTOTALS FOR: MCROVEBLAF_G        BASE:   224.5 CHNG:   207.9 DIFF:    -7.4%
                                               DIFF:   -16.6   DF:    -4.5%
*******************************************************************************

31088 MCCREDIE  - 31408 OVERTON    *CONTINGENCY* BASE:     0.0 CHNG:     0.0
-------------------------------------------------------------------------------
30154 BLAND     - 96041 7FRANKS    BASE:   369.6 CHNG:   367.2 DIFF:    -0.6%

SUBTOTALS FOR: BLAFRAMCROVE        BASE:   369.6 CHNG:   367.2 DIFF:    -0.6%
                                               DIFF:    -2.4   DF:    -0.6%
*******************************************************************************
```

```
36281 BYRON; R  - 36289 CHERR; R   *CONTINGENCY* BASE:     0.0 CHNG:     0.0
-------------------------------------------------------------------------------
36280 BYRON; B  - 36288 CHERR; B   BASE:  1312.9 CHNG:  1325.3 DIFF:     0.9%

SUBTOTALS FOR: BYNCHEBYNCHE        BASE:  1312.9 CHNG:  1325.3 DIFF:     0.9%
                                                 DIFF:    12.4   DF:     3.4%
*******************************************************************************

36281 BYRON; R  - 36406 WEMPL; B   *CONTINGENCY* BASE:     0.0 CHNG:     0.0
-------------------------------------------------------------------------------
36280 BYRON; B  - 36288 CHERR; B   BASE:  1157.4 CHNG:  1164.2 DIFF:     0.6%

SUBTOTALS FOR: BYCH_BBYNWEM        BASE:  1157.4 CHNG:  1164.2 DIFF:     0.6%
                                                 DIFF:     6.8   DF:     1.8%
*******************************************************************************

36280 BYRON; B  - 36288 CHERR; B   *CONTINGENCY* BASE:     0.0 CHNG:     0.0
-------------------------------------------------------------------------------
36281 BYRON; R  - 36289 CHERR; R   BASE:  1373.4 CHNG:  1386.5 DIFF:     1.0%

SUBTOTALS FOR: BYRCHEBYRCHE        BASE:  1373.4 CHNG:  1386.5 DIFF:     1.0%
                                                 DIFF:    13.1   DF:     3.6%
*******************************************************************************

36281 BYRON; R  - 36406 WEMPL; B   *CONTINGENCY* BASE:     0.0 CHNG:     0.0
-------------------------------------------------------------------------------
36281 BYRON; R  - 36289 CHERR; R   BASE:  1287.1 CHNG:  1294.8 DIFF:     0.6%

SUBTOTALS FOR: BYCH_RBYNWEM        BASE:  1287.1 CHNG:  1294.8 DIFF:     0.6%
                                                 DIFF:     7.7   DF:     2.1%
*******************************************************************************

36284 CORDO; B  - 36362 NELSO; B   *CONTINGENCY* BASE:     0.0 CHNG:     0.0
-------------------------------------------------------------------------------
36382 QUAD ;    - 36368 H471 ;     BASE:   734.7 CHNG:   778.7 DIFF:     6.0%

SUBTOTALS FOR: QUA471CDVNEL        BASE:   734.7 CHNG:   778.7 DIFF:     6.0%
                                                 DIFF:    44.0   DF:    12.0%
*******************************************************************************

36382 QUAD ;    - 36368 H471 ;     *CONTINGENCY* BASE:     0.0 CHNG:     0.0
-------------------------------------------------------------------------------
36382 QUAD ;    - 36284 CORDO; B   BASE:   284.5 CHNG:   302.4 DIFF:     6.3%
36284 CORDO; B  - 36362 NELSO; B   BASE:   730.8 CHNG:   774.6 DIFF:     6.0%

SUBTOTALS FOR: QUACDVQUA471        BASE:  1015.3 CHNG:  1077.0 DIFF:     6.1%
                                                 DIFF:    61.7   DF:    16.8%
*******************************************************************************

36420 ZION ; B  - 39247 ARCADN3    *CONTINGENCY* BASE:     0.0 CHNG:     0.0
-------------------------------------------------------------------------------
36407 WEMPL; R  - 39058 PAD 345    BASE:   274.1 CHNG:   269.9 DIFF:    -1.5%

SUBTOTALS FOR: WEMPADZIOARC        BASE:   274.1 CHNG:   269.9 DIFF:    -1.5%
                                                 DIFF:    -4.2   DF:    -1.1%
*******************************************************************************

36421 ZION ; R  - 38849 PLS PR2    *CONTINGENCY* BASE:     0.0 CHNG:     0.0
-------------------------------------------------------------------------------
36407 WEMPL; R  - 39058 PAD 345    BASE:   218.8 CHNG:   212.6 DIFF:    -2.8%

SUBTOTALS FOR: WEMPADZIOPLP        BASE:   218.8 CHNG:   212.6 DIFF:    -2.8%
                                                 DIFF:    -6.2   DF:    -1.7%
*******************************************************************************

36289 CHERR; R  - 36389 SILVE; R   *CONTINGENCY* BASE:     0.0 CHNG:     0.0
-------------------------------------------------------------------------------
36407 WEMPL; R  - 39058 PAD 345    BASE:   356.0 CHNG:   354.6 DIFF:    -0.4%

SUBTOTALS FOR: WEMPADCHVSLA        BASE:   356.0 CHNG:   354.6 DIFF:    -0.4%
```

```
                                                DIFF:    -1.4   DF:    -0.4%
*******************************************************************************

36420 ZION ; B  - 39247 ARCADN3    *CONTINGENCY* BASE:     0.0 CHNG:     0.0
-------------------------------------------------------------------------------
36421 ZION ; R  - 38849 PLS PR2    BASE:  -604.0 CHNG:  -643.9 DIFF:     6.6%

SUBTOTALS FOR: ZIOPLPZIOARC        BASE:  -604.0 CHNG:  -643.9 DIFF:     6.6%
                                                DIFF:   -39.9   DF:   -10.8%
*******************************************************************************

36407 WEMPL; R  - 39058 PAD 345    *CONTINGENCY* BASE:     0.0 CHNG:     0.0
-------------------------------------------------------------------------------
36421 ZION ; R  - 38849 PLS PR2    BASE:  -548.6 CHNG:  -578.3 DIFF:     5.4%

SUBTOTALS FOR: ZIOPLPWEMPAD        BASE:  -548.6 CHNG:  -578.3 DIFF:     5.4%
                                                DIFF:   -29.7   DF:    -8.1%
*******************************************************************************

36421 ZION ; R  - 38849 PLS PR2    *CONTINGENCY* BASE:     0.0 CHNG:     0.0
-------------------------------------------------------------------------------
36420 ZION ; B  - 39247 ARCADN3    BASE:  -283.8 CHNG:  -312.8 DIFF:    10.2%

SUBTOTALS FOR: ZIOARCZIOPLP        BASE:  -283.8 CHNG:  -312.8 DIFF:    10.2%
                                                DIFF:   -29.0   DF:    -7.9%
*******************************************************************************

36362 NELSO; B  - 36310 ELECT; B   *CONTINGENCY* BASE:     0.0 CHNG:     0.0
-------------------------------------------------------------------------------
36289 CHERR; R  - 36389 SILVE; R   BASE:  1000.0 CHNG:  1028.2 DIFF:     2.8%

SUBTOTALS FOR: CHESILNELELC        BASE:  1000.0 CHNG:  1028.2 DIFF:     2.8%
                                                DIFF:    28.1   DF:     7.6%
*******************************************************************************

36289 CHERR; R  - 36389 SILVE; R   *CONTINGENCY* BASE:     0.0 CHNG:     0.0
-------------------------------------------------------------------------------
36362 NELSO; B  - 36310 ELECT; B   BASE:   845.5 CHNG:   879.6 DIFF:     4.0%

SUBTOTALS FOR: NELELCCHESIL        BASE:   845.5 CHNG:   879.6 DIFF:     4.0%
                                                DIFF:    34.1   DF:     9.3%
*******************************************************************************

36407 WEMPL; R  - 39058 PAD 345    *CONTINGENCY* BASE:     0.0 CHNG:     0.0
-------------------------------------------------------------------------------
37632 LEECO;BP  - 36362 NELSO; B   BASE:   393.0 CHNG:   378.3 DIFF:    -3.8%

SUBTOTALS FOR: LCONELWEMPAD        BASE:   393.0 CHNG:   378.3 DIFF:    -3.8%
                                                DIFF:   -14.7   DF:    -4.0%
*******************************************************************************

39253 ARCADN1   - 39329 GRANVL1    *CONTINGENCY* BASE:     0.0 CHNG:     0.0
-------------------------------------------------------------------------------
39268 BUTLER    - 39327 GRANVL 5   BASE:  -102.9 CHNG:  -112.4 DIFF:     9.2%

SUBTOTALS FOR: BTRGVLARCGVL        BASE:  -102.9 CHNG:  -112.4 DIFF:     9.2%
                                                DIFF:    -9.5   DF:    -2.6%
*******************************************************************************

36407 WEMPL; R  - 39058 PAD 345    *CONTINGENCY* BASE:     0.0 CHNG:     0.0
-------------------------------------------------------------------------------
38850 PLS PR3   - 39471 RACINE1    BASE:    36.3 CHNG:    19.4 DIFF:   -46.7%

SUBTOTALS FOR: PLPRACWEMPAD        BASE:    36.3 CHNG:    19.4 DIFF:   -46.7%
                                                DIFF:   -17.0   DF:    -4.6%
*******************************************************************************

38894 N APP 3   - 38928 WERNER W   *CONTINGENCY* BASE:     0.0 CHNG:     0.0
38928 WERNER W  - 39785 ROCKY RN   *CONTINGENCY* BASE:     0.0 CHNG:     0.0
-------------------------------------------------------------------------------
38892 ELLNGTN3  - 39534 HINTZ      BASE:    50.0 CHNG:    36.1 DIFF:   -27.7%
```

```
SUBTOTALS FOR: ELNHNZNAPRRN        BASE:    50.0 CHNG:    36.1 DIFF:   -27.7%
                                                DIFF:   -13.9   DF:    -3.8%
*******************************************************************************

38849 PLS PR2   - 36421 ZION ; R   *CONTINGENCY* BASE:     0.0 CHNG:     0.0
-------------------------------------------------------------------------------
39345 KENOSH45  - 39362 LAKEVIEW   BASE:   181.1 CHNG:   189.3 DIFF:     4.6%

SUBTOTALS FOR: KSHLKVPLPZIO        BASE:   181.1 CHNG:   189.3 DIFF:     4.6%
                                                DIFF:     8.3   DF:     2.3%
*******************************************************************************

38850 PLS PR3   - 39471 RACINE1    *CONTINGENCY* BASE:     0.0 CHNG:     0.0
-------------------------------------------------------------------------------
39432 PLS PR1   - 39253 ARCADN1    BASE:   155.7 CHNG:   137.0 DIFF:   -12.1%

SUBTOTALS FOR: PLPARCPLRRAC        BASE:   155.7 CHNG:   137.0 DIFF:   -12.1%
                                                DIFF:   -18.8   DF:    -5.1%
*******************************************************************************

36420 ZION ; B  - 39247 ARCADN3    *CONTINGENCY* BASE:     0.0 CHNG:     0.0
-------------------------------------------------------------------------------
39432 PLS PR1   - 39253 ARCADN1    BASE:   157.2 CHNG:   140.2 DIFF:   -10.8%

SUBTOTALS FOR: PLPARCZIOARC        BASE:   157.2 CHNG:   140.2 DIFF:   -10.8%
                                                DIFF:   -17.0   DF:    -4.6%
*******************************************************************************

36289 CHERR; R  - 36389 SILVE; R   *CONTINGENCY* BASE:     0.0 CHNG:     0.0
-------------------------------------------------------------------------------
38883 WHTWTR5   - 39357 MUKWONGO   BASE:     0.0 CHNG:     0.0 DIFF:   999.0%

SUBTOTALS FOR: WHIMUKCHESIL        BASE:     0.0 CHNG:     0.0 DIFF:   999.0%
                                                DIFF:     0.0   DF:     0.0%
*******************************************************************************

36289 CHERR; R  - 36389 SILVE; R   *CONTINGENCY* BASE:     0.0 CHNG:     0.0
-------------------------------------------------------------------------------
38849 PLS PR2   - 36421 ZION ; R   BASE:   732.6 CHNG:   764.6 DIFF:     4.4%

SUBTOTALS FOR: PLPZIOCHESIL        BASE:   732.6 CHNG:   764.6 DIFF:     4.4%
                                                DIFF:    32.0   DF:     8.7%
*******************************************************************************

36420 ZION ; B  - 39247 ARCADN3    *CONTINGENCY* BASE:     0.0 CHNG:     0.0
-------------------------------------------------------------------------------
38849 PLS PR2   - 36421 ZION ; R   BASE:   605.4 CHNG:   645.5 DIFF:     6.6%

SUBTOTALS FOR: PLPZIOZIOARC        BASE:   605.4 CHNG:   645.5 DIFF:     6.6%
                                                DIFF:    40.1   DF:    10.9%
*******************************************************************************

38850 PLS PR3   - 39471 RACINE1    *CONTINGENCY* BASE:     0.0 CHNG:     0.0
-------------------------------------------------------------------------------
39249 ALBRS-12  - 39410 PARIS WE   BASE:    73.3 CHNG:    68.0 DIFF:    -7.3%

SUBTOTALS FOR: ALBPARPLPRAC        BASE:    73.3 CHNG:    68.0 DIFF:    -7.3%
                                                DIFF:    -5.4   DF:    -1.5%
*******************************************************************************

39432 PLS PR1   - 39253 ARCADN1    *CONTINGENCY* BASE:     0.0 CHNG:     0.0
-------------------------------------------------------------------------------
38850 PLS PR3   - 39471 RACINE1    BASE:    83.4 CHNG:    60.9 DIFF:   -27.0%

SUBTOTALS FOR: PLPRACPLPADN        BASE:    83.4 CHNG:    60.9 DIFF:   -27.0%
                                                DIFF:   -22.5   DF:    -6.1%
*******************************************************************************

38894 N APP 3   - 38928 WERNER W   *CONTINGENCY* BASE:     0.0 CHNG:     0.0
38928 WERNER W  - 39785 ROCKY RN   *CONTINGENCY* BASE:     0.0 CHNG:     0.0
```

```
-------------------------------------------------------------------------------
39786 ROCKY RN  - 39790 WHITNG A   BASE:   202.5 CHNG:   206.9 DIFF:     2.2%

SUBTOTALS FOR: RRNWAVRRNNAP        BASE:   202.5 CHNG:   206.9 DIFF:     2.2%
                                               DIFF:     4.4   DF:     1.2%
*******************************************************************************

39785 ROCKY RN  - 39676 GARDR PK   *CONTINGENCY* BASE:     0.0 CHNG:     0.0
-------------------------------------------------------------------------------
39210 CW8 115   - 39686 WESTON     BASE:   -98.2 CHNG:   -99.4 DIFF:     1.2%

SUBTOTALS FOR: RRNWESRRNGPK        BASE:   -98.2 CHNG:   -99.4 DIFF:     1.2%
                                               DIFF:    -1.2   DF:    -0.3%
*******************************************************************************

36407 WEMPL; R  - 39058 PAD 345    *CONTINGENCY* BASE:     0.0 CHNG:     0.0
-------------------------------------------------------------------------------
34093 ARNOLD 3  - 34018 HAZLTON3   BASE:   147.8 CHNG:   127.6 DIFF:   -13.7%

SUBTOTALS FOR: ARNHAZWEMPAD        BASE:   147.8 CHNG:   127.6 DIFF:   -13.7%
                                               DIFF:   -20.2   DF:    -5.5%
*******************************************************************************

36407 WEMPL; R  - 39058 PAD 345    *CONTINGENCY* BASE:     0.0 CHNG:     0.0
-------------------------------------------------------------------------------
34028 LORE   5  - 34033 TRK RIV5   BASE:   160.3 CHNG:   158.6 DIFF:    -1.1%

SUBTOTALS FOR: LORTRKWEMPAD        BASE:   160.3 CHNG:   158.6 DIFF:    -1.1%
                                               DIFF:    -1.8   DF:    -0.5%
*******************************************************************************

34093 ARNOLD 3  - 34018 HAZLTON3   *CONTINGENCY* BASE:     0.0 CHNG:     0.0
-------------------------------------------------------------------------------
34007 LAKEFLD5  - 34008 FOX LK 5   BASE:    39.3 CHNG:    41.6 DIFF:     5.8%

SUBTOTALS FOR: LKJFOXARNHAZ        BASE:    39.3 CHNG:    41.6 DIFF:     5.8%
                                               DIFF:     2.3   DF:     0.6%
*******************************************************************************

36382 QUAD ;    - 64405 SUB 91 3   *CONTINGENCY* BASE:     0.0 CHNG:     0.0
-------------------------------------------------------------------------------
34036 ROCK CK3  - 34037 ROCK CK5   BASE:   269.7 CHNG:   266.1 DIFF:    -1.3%

SUBTOTALS FOR: RCKXFMQUADAV        BASE:   269.7 CHNG:   266.1 DIFF:    -1.3%
                                               DIFF:    -3.6   DF:    -1.0%
*******************************************************************************

36382 QUAD ;    - 64405 SUB 91 3   *CONTINGENCY* BASE:     0.0 CHNG:     0.0
-------------------------------------------------------------------------------
34035 ROCKCKW5  - 34124 DEWITT 5   BASE:    79.5 CHNG:    75.1 DIFF:    -5.5%

SUBTOTALS FOR: RCKDWTQUAS91        BASE:    79.5 CHNG:    75.1 DIFF:    -5.5%
                                               DIFF:    -4.4   DF:    -1.2%
*******************************************************************************

36382 QUAD ;    - 64405 SUB 91 3   *CONTINGENCY* BASE:     0.0 CHNG:     0.0
-------------------------------------------------------------------------------
34029 SALEM  3  - 34030 SALEM N5   BASE:   212.9 CHNG:   210.4 DIFF:    -1.2%

SUBTOTALS FOR: SALXFMQUAS91        BASE:   212.9 CHNG:   210.4 DIFF:    -1.2%
                                               DIFF:    -2.5   DF:    -0.7%
*******************************************************************************

64400 MECCORD3  - 64403 E MOLIN3   *CONTINGENCY* BASE:     0.0 CHNG:     0.0
-------------------------------------------------------------------------------
34029 SALEM  3  - 34030 SALEM N5   BASE:   203.7 CHNG:   201.6 DIFF:    -1.1%

SUBTOTALS FOR: SALXFMCORMOL        BASE:   203.7 CHNG:   201.6 DIFF:    -1.1%
                                               DIFF:    -2.1   DF:    -0.6%
*******************************************************************************
```

```
36382 QUAD ;    - 64405 SUB 91 3   *CONTINGENCY* BASE:     0.0 CHNG:     0.0
-------------------------------------------------------------------------------
34029 SALEM  3  - 34030 SALEM N5   BASE:   212.9 CHNG:   210.4 DIFF:    -1.2%

SUBTOTALS FOR: SALXFMQUADAV        BASE:   212.9 CHNG:   210.4 DIFF:    -1.2%
                                                 DIFF:    -2.5   DF:    -0.7%
*******************************************************************************

64350 HILLS  3  - 64095 MNTZUMA3   *CONTINGENCY* BASE:     0.0 CHNG:     0.0
-------------------------------------------------------------------------------
64352 TIFFIN 3  - 34093 ARNOLD 3   BASE:   140.6 CHNG:   111.9 DIFF:   -20.4%

SUBTOTALS FOR: TIFARNHILMON        BASE:   140.6 CHNG:   111.9 DIFF:   -20.4%
                                                 DIFF:   -28.6   DF:    -7.8%
*******************************************************************************

34093 ARNOLD 3  - 34018 HAZLTON3   *CONTINGENCY* BASE:     0.0 CHNG:     0.0
-------------------------------------------------------------------------------
34091 ARNOLD 5  - 34089 VINTON 5   BASE:    94.3 CHNG:    85.4 DIFF:    -9.4%

SUBTOTALS FOR: ARNVINARNHAZ        BASE:    94.3 CHNG:    85.4 DIFF:    -9.4%
                                                 DIFF:    -8.8   DF:    -2.4%
*******************************************************************************

36382 QUAD ;    - 34036 ROCK CK3   *CONTINGENCY* BASE:     0.0 CHNG:     0.0
-------------------------------------------------------------------------------
64425 DAVNPRT5  - 34122 E CALMS5   BASE:     0.0 CHNG:     0.0 DIFF:   999.0%

SUBTOTALS FOR: DAVCALQUARCK        BASE:     0.0 CHNG:     0.0 DIFF:   999.0%
                                                 DIFF:     0.0   DF:     0.0%
*******************************************************************************

64095 MNTZUMA3  - 64064 BONDRNT3   *CONTINGENCY* BASE:     0.0 CHNG:     0.0
-------------------------------------------------------------------------------
34052 AMES   7  - 34076 BNE JCT7   BASE:   -24.2 CHNG:   -26.0 DIFF:     7.3%

SUBTOTALS FOR: AMEBJCMTZBON        BASE:   -24.2 CHNG:   -26.0 DIFF:     7.3%
                                                 DIFF:    -1.8   DF:    -0.5%
*******************************************************************************

34006 LAKEFLD3  - 60331 LKFLDXL3   *CONTINGENCY* BASE:     0.0 CHNG:     0.0
-------------------------------------------------------------------------------
34007 LAKEFLD5  - 34008 FOX LK 5   BASE:    82.6 CHNG:    86.5 DIFF:     4.7%

SUBTOTALS FOR: LAKFOXLAKLKF        BASE:    82.6 CHNG:    86.5 DIFF:     4.7%
                                                 DIFF:     3.9   DF:     1.1%
*******************************************************************************

34093 ARNOLD 3  - 34018 HAZLTON3   *CONTINGENCY* BASE:     0.0 CHNG:     0.0
-------------------------------------------------------------------------------
34087 DYSART 5  - 64269 WASHBRN5   BASE:   130.6 CHNG:   124.4 DIFF:    -4.8%

SUBTOTALS FOR: DYSWASARNHAZ        BASE:   130.6 CHNG:   124.4 DIFF:    -4.8%
                                                 DIFF:    -6.2   DF:    -1.7%
*******************************************************************************

64080 SYCAMOR3  - 64198 GRIMES 3   *CONTINGENCY* BASE:     0.0 CHNG:     0.0
-------------------------------------------------------------------------------
64067 BONDRNT5  - 34529 HUXLEYT5   BASE:    55.4 CHNG:    53.7 DIFF:    -3.0%

SUBTOTALS FOR: BONBJCSYCLEH        BASE:    55.4 CHNG:    53.7 DIFF:    -3.0%
                                                 DIFF:    -1.7   DF:    -0.5%
*******************************************************************************

64202 LEHIGH 3  - 64200 WEBSTER3   *CONTINGENCY* BASE:     0.0 CHNG:     0.0
-------------------------------------------------------------------------------
64067 BONDRNT5  - 34529 HUXLEYT5   BASE:   106.5 CHNG:   105.0 DIFF:    -1.4%

SUBTOTALS FOR: BONBJCLEHWBS        BASE:   106.5 CHNG:   105.0 DIFF:    -1.4%
                                                 DIFF:    -1.5   DF:    -0.4%
*******************************************************************************
```

```
34007 LAKEFLD5  - 34137 TRIBOJI5   *CONTINGENCY* BASE:     0.0 CHNG:     0.0
-------------------------------------------------------------------------------
34007 LAKEFLD5  - 34008 FOX LK 5   BASE:    47.0 CHNG:    49.9 DIFF:     6.1%

SUBTOTALS FOR: LKJFOXLKJTRI        BASE:    47.0 CHNG:    49.9 DIFF:     6.1%
                                                DIFF:     2.9   DF:     0.8%
*******************************************************************************

60304 EAU CL 3  - 39244 ARP 345    *CONTINGENCY* BASE:     0.0 CHNG:     0.0
-------------------------------------------------------------------------------
34020 HAZL S 5  - 34135 DUNDEE 5   BASE:    68.0 CHNG:    73.3 DIFF:     7.8%

SUBTOTALS FOR: HAZDUNEAUARP        BASE:    68.0 CHNG:    73.3 DIFF:     7.8%
                                                DIFF:     5.3   DF:     1.4%
*******************************************************************************

63875 RAUN   3  - 34006 LAKEFLD3   *CONTINGENCY* BASE:     0.0 CHNG:     0.0
-------------------------------------------------------------------------------
66563 SPENCER5  - 34137 TRIBOJI5   BASE:   -87.0 CHNG:   -94.9 DIFF:     9.1%

SUBTOTALS FOR: SPETRILAKRAU        BASE:   -87.0 CHNG:   -94.9 DIFF:     9.1%
                                                DIFF:    -7.9   DF:    -2.1%
*******************************************************************************

36407 WEMPL; R  - 39058 PAD 345    *CONTINGENCY* BASE:     0.0 CHNG:     0.0
-------------------------------------------------------------------------------
34029 SALEM  3  - 34030 SALEM N5   BASE:   198.0 CHNG:   196.1 DIFF:    -0.9%

SUBTOTALS FOR: SALXFMWEMPAD        BASE:   198.0 CHNG:   196.1 DIFF:    -0.9%
                                                DIFF:    -1.8   DF:    -0.5%
*******************************************************************************

64352 TIFFIN 3  - 34093 ARNOLD 3   *CONTINGENCY* BASE:     0.0 CHNG:     0.0
-------------------------------------------------------------------------------
64350 HILLS  3  - 34110 HILLSIE5   BASE:   108.7 CHNG:   103.4 DIFF:    -4.9%

SUBTOTALS FOR: HILXFMTIFARN        BASE:   108.7 CHNG:   103.4 DIFF:    -4.9%
                                                DIFF:    -5.3   DF:    -1.4%
*******************************************************************************

36407 WEMPL; R  - 39058 PAD 345    *CONTINGENCY* BASE:     0.0 CHNG:     0.0
-------------------------------------------------------------------------------
34032 8TH ST.5  - 34028 LORE   5   BASE:     0.0 CHNG:     0.0 DIFF:   999.0%

SUBTOTALS FOR: 8STKERWEMPAD        BASE:     0.0 CHNG:     0.0 DIFF:   999.0%
                                                DIFF:     0.0   DF:     0.0%
*******************************************************************************

34093 ARNOLD 3  - 34018 HAZLTON3   *CONTINGENCY* BASE:     0.0 CHNG:     0.0
-------------------------------------------------------------------------------
34032 8TH ST.5  - 34028 LORE   5   BASE:     0.0 CHNG:     0.0 DIFF:   999.0%

SUBTOTALS FOR: 8STKERARNHAZ        BASE:     0.0 CHNG:     0.0 DIFF:   999.0%
                                                DIFF:     0.0   DF:     0.0%
*******************************************************************************

36382 QUAD ;    - 36368 H471 ;     *CONTINGENCY* BASE:     0.0 CHNG:     0.0
-------------------------------------------------------------------------------
34045 ALBANY 6  - 36773 GARDE;     BASE:    56.4 CHNG:    62.1 DIFF:    10.1%

SUBTOTALS FOR: ALBGARQUAST         BASE:    56.4 CHNG:    62.1 DIFF:    10.1%
                                                DIFF:     5.7   DF:     1.5%
*******************************************************************************

64095 MNTZUMA3  - 64064 BONDRNT3   *CONTINGENCY* BASE:     0.0 CHNG:     0.0
-------------------------------------------------------------------------------
34066 M-TOWN 7  - 34071 FERNALD7   BASE:    17.2 CHNG:    14.6 DIFF:   -15.3%

SUBTOTALS FOR: MRTFERMTZBON        BASE:    17.2 CHNG:    14.6 DIFF:   -15.3%
                                                DIFF:    -2.6   DF:    -0.7%
```

```
*******************************************************************************

64202 LEHIGH 3  - 64200 WEBSTER3   *CONTINGENCY* BASE:     0.0 CHNG:     0.0
-------------------------------------------------------------------------------
34015 LIME CK5  - 34016 EMERY  5   BASE:   -43.3 CHNG:   -41.4 DIFF:    -4.5%

SUBTOTALS FOR: LIMEMELEHWEB        BASE:   -43.3 CHNG:   -41.4 DIFF:    -4.5%
                                                DIFF:     1.9   DF:     0.5%
*******************************************************************************

36407 WEMPL; R  - 39058 PAD 345    *CONTINGENCY* BASE:     0.0 CHNG:     0.0
-------------------------------------------------------------------------------
34028 LORE   5  - 34033 TRK RIV5   BASE:   160.3 CHNG:   158.6 DIFF:    -1.1%

SUBTOTALS FOR: LORTRKWPAD_G        BASE:   160.3 CHNG:   158.6 DIFF:    -1.1%
                                                DIFF:    -1.8   DF:    -0.5%
*******************************************************************************

34093 ARNOLD 3  - 34018 HAZLTON3   *CONTINGENCY* BASE:     0.0 CHNG:     0.0
-------------------------------------------------------------------------------
34089 VINTON 5  - 34087 DYSART 5   BASE:    89.6 CHNG:    80.9 DIFF:    -9.8%

SUBTOTALS FOR: VINDYSARNHAZ        BASE:    89.6 CHNG:    80.9 DIFF:    -9.8%
                                                DIFF:    -8.7   DF:    -2.4%
*******************************************************************************

60102 ADAMS  3  - 34018 HAZLTON3   *CONTINGENCY* BASE:     0.0 CHNG:     0.0
-------------------------------------------------------------------------------
34015 LIME CK5  - 34016 EMERY  5   BASE:   -49.5 CHNG:   -43.7 DIFF:   -11.6%

SUBTOTALS FOR: LIMEMEADAHAZ        BASE:   -49.5 CHNG:   -43.7 DIFF:   -11.6%
                                                DIFF:     5.8   DF:     1.6%
*******************************************************************************

36407 WEMPL; R  - 39058 PAD 345    *CONTINGENCY* BASE:     0.0 CHNG:     0.0
-------------------------------------------------------------------------------
34030 SALEM N5  - 34508 JULIAN 5   BASE:    77.4 CHNG:    74.7 DIFF:    -3.5%

SUBTOTALS FOR: SALJCRWEMPAD        BASE:    77.4 CHNG:    74.7 DIFF:    -3.5%
                                                DIFF:    -2.7   DF:    -0.7%
*******************************************************************************

60331 LKFLDXL3  - 60364 FIELD_N3   *CONTINGENCY* BASE:     0.0 CHNG:     0.0
-------------------------------------------------------------------------------
34007 LAKEFLD5  - 34008 FOX LK 5   BASE:   111.2 CHNG:   115.8 DIFF:     4.1%

SUBTOTALS FOR: LKFFOXLKFWLM        BASE:   111.2 CHNG:   115.8 DIFF:     4.1%
                                                DIFF:     4.6   DF:     1.3%
*******************************************************************************

64095 MNTZUMA3  - 64064 BONDRNT3   *CONTINGENCY* BASE:     0.0 CHNG:     0.0
-------------------------------------------------------------------------------
34093 ARNOLD 3  - 34018 HAZLTON3   BASE:   125.9 CHNG:   100.6 DIFF:   -20.1%

SUBTOTALS FOR: ARNHAZMTZBON        BASE:   125.9 CHNG:   100.6 DIFF:   -20.1%
                                                DIFF:   -25.3   DF:    -6.9%
*******************************************************************************

64352 TIFFIN 3  - 34093 ARNOLD 3   *CONTINGENCY* BASE:     0.0 CHNG:     0.0
-------------------------------------------------------------------------------
34029 SALEM  3  - 34030 SALEM N5   BASE:   195.0 CHNG:   193.0 DIFF:    -1.0%

SUBTOTALS FOR: SALXFMTIFARN        BASE:   195.0 CHNG:   193.0 DIFF:    -1.0%
                                                DIFF:    -2.0   DF:    -0.6%
*******************************************************************************

64350 HILLS  3  - 64352 TIFFIN 3   *CONTINGENCY* BASE:     0.0 CHNG:     0.0
-------------------------------------------------------------------------------
34029 SALEM  3  - 34030 SALEM N5   BASE:   195.1 CHNG:   193.2 DIFF:    -1.0%

SUBTOTALS FOR: SALXFMHL3TIF        BASE:   195.1 CHNG:   193.2 DIFF:    -1.0%
```

```
                                                DIFF:    -1.9   DF:    -0.5%
*******************************************************************************

64095 MNTZUMA3  - 64064 BONDRNT3   *CONTINGENCY* BASE:     0.0 CHNG:     0.0
-------------------------------------------------------------------------------
64352 TIFFIN 3  - 34093 ARNOLD 3   BASE:   161.2 CHNG:   131.9 DIFF:   -18.1%

SUBTOTALS FOR: TIFARNMTZBON        BASE:   161.2 CHNG:   131.9 DIFF:   -18.1%
                                                DIFF:   -29.2   DF:    -7.9%
*******************************************************************************

34091 ARNOLD 5  - 34090 ARNOLD1G   *CONTINGENCY* BASE:     0.0 CHNG:     0.0
-------------------------------------------------------------------------------
64350 HILLS  3  - 34110 HILLSIE5   BASE:   120.5 CHNG:   118.7 DIFF:    -1.5%

SUBTOTALS FOR: HILXFMARNXFM        BASE:   120.5 CHNG:   118.7 DIFF:    -1.5%
                                                DIFF:    -1.8   DF:    -0.5%
*******************************************************************************

34016 EMERY  5  - 64252 FLOYD  5   *CONTINGENCY* BASE:     0.0 CHNG:     0.0
-------------------------------------------------------------------------------
34016 EMERY  5  - 34015 LIME CK5   BASE:   101.7 CHNG:   100.7 DIFF:    -0.9%

SUBTOTALS FOR: EMELIMEMEFYD        BASE:   101.7 CHNG:   100.7 DIFF:    -0.9%
                                                DIFF:    -0.9   DF:    -0.3%
*******************************************************************************

56769 LANG   7  - 56796 WICHITA7   *CONTINGENCY* BASE:     0.0 CHNG:     0.0
-------------------------------------------------------------------------------
57981 LACYGNE7  - 56793 NEOSHO 7   BASE:   312.2 CHNG:   329.2 DIFF:     5.4%

SUBTOTALS FOR: LACNEOLANWIC        BASE:   312.2 CHNG:   329.2 DIFF:     5.4%
                                                DIFF:    17.0   DF:     4.6%
*******************************************************************************

59396 LAKE RD5  - 58028 NASHUA-5   *CONTINGENCY* BASE:     0.0 CHNG:     0.0
57982 IATAN  7  - 56772 STRANGR7   *CONTINGENCY* BASE:     0.0 CHNG:     0.0
-------------------------------------------------------------------------------
59393 ST JOE 3  - 57972 HAWTH  7   BASE:   468.2 CHNG:   510.5 DIFF:     9.0%

SUBTOTALS FOR: SJOHTHIATSTC        BASE:   468.2 CHNG:   510.5 DIFF:     9.0%
                                                DIFF:    42.3   DF:    11.5%
*******************************************************************************

57981 LACYGNE7  - 57968 STILWEL7   *CONTINGENCY* BASE:     0.0 CHNG:     0.0
-------------------------------------------------------------------------------
57981 LACYGNE7  - 57965 W.GRDNR7   BASE:   989.9 CHNG:   973.1 DIFF:    -1.7%

SUBTOTALS FOR: LACWGRLACSTI        BASE:   989.9 CHNG:   973.1 DIFF:    -1.7%
                                                DIFF:   -16.9   DF:    -4.6%
*******************************************************************************

56873 SUMMIT 6  - 56872 EMCPHER6   *CONTINGENCY* BASE:     0.0 CHNG:     0.0
-------------------------------------------------------------------------------
57374 SPHILPJ3  - 57438 WMCPHER3   BASE:    -8.0 CHNG:    -8.7 DIFF:    10.0%
57374 SPHILPJ3  - 57438 WMCPHER3   BASE:    -9.0 CHNG:    -9.9 DIFF:    10.7%

SUBTOTALS FOR: SPHWMCSUMEMC        BASE:   -16.9 CHNG:   -18.7 DIFF:    10.4%
                                                DIFF:    -1.8   DF:    -0.5%
*******************************************************************************

59396 LAKE RD5  - 58028 NASHUA-5   *CONTINGENCY* BASE:     0.0 CHNG:     0.0
59393 ST JOE 3  - 57972 HAWTH  7   *CONTINGENCY* BASE:     0.0 CHNG:     0.0
-------------------------------------------------------------------------------
57982 IATAN  7  - 56772 STRANGR7   BASE:   530.7 CHNG:   571.4 DIFF:     7.7%

SUBTOTALS FOR: IATSTRLRDNUA        BASE:   530.7 CHNG:   571.4 DIFF:     7.7%
                                                DIFF:    40.7   DF:    11.1%
*******************************************************************************

65351 S3451  3  - 63875 RAUN   3   *CONTINGENCY* BASE:     0.0 CHNG:     0.0
```

```
-------------------------------------------------------------------------------
65426 S1226  5  - 64987 TEKAMAH5   BASE:   -43.2 CHNG:   -54.9 DIFF:    27.0%

SUBTOTALS FOR: S12TEKS34RAU        BASE:   -43.2 CHNG:   -54.9 DIFF:    27.0%
                                                 DIFF:   -11.6   DF:    -3.2%
*******************************************************************************

36382 QUAD ;    - 34036 ROCK CK3   *CONTINGENCY* BASE:     0.0 CHNG:     0.0
-------------------------------------------------------------------------------
36382 QUAD ;    - 64405 SUB 91 3   BASE:   676.0 CHNG:   649.7 DIFF:    -3.9%

SUBTOTALS FOR: QUAS91QUARCK        BASE:   676.0 CHNG:   649.7 DIFF:    -3.9%
                                                 DIFF:   -26.4   DF:    -7.2%
*******************************************************************************

34018 HAZLTON3  - 60102 ADAMS  3   *CONTINGENCY* BASE:     0.0 CHNG:     0.0
-------------------------------------------------------------------------------
60102 ADAMS  3  - 34014 ADAMS  5   BASE:   137.2 CHNG:   147.8 DIFF:     7.7%

SUBTOTALS FOR: ADMXFMHAZADM        BASE:   137.2 CHNG:   147.8 DIFF:     7.7%
                                                 DIFF:    10.6   DF:     2.9%
*******************************************************************************

96039 7FAIRPT   - 64786 COOPER 3   *CONTINGENCY* BASE:     0.0 CHNG:     0.0
96039 7FAIRPT   - 59393 ST JOE 3   *CONTINGENCY* BASE:     0.0 CHNG:     0.0
-------------------------------------------------------------------------------
59394 ST JOE 5  - 59392 MIDWAY 5   BASE:   120.4 CHNG:   116.9 DIFF:    -2.9%

SUBTOTALS FOR: STJMIDSTJFRC        BASE:   120.4 CHNG:   116.9 DIFF:    -2.9%
                                                 DIFF:    -3.5   DF:    -1.0%
*******************************************************************************

64350 HILLS  3  - 64095 MNTZUMA3   *CONTINGENCY* BASE:     0.0 CHNG:     0.0
-------------------------------------------------------------------------------
34110 HILLSIE5  - 34109 BERTRAM5   BASE:    73.4 CHNG:    70.4 DIFF:    -4.1%

SUBTOTALS FOR: HL5PRLHL3MTZ        BASE:    73.4 CHNG:    70.4 DIFF:    -4.1%
                                                 DIFF:    -3.0   DF:    -0.8%
*******************************************************************************

63041 COAL CR4  - 63042 COAL TP4   *CONTINGENCY* BASE:     0.0 CHNG:     0.0
-------------------------------------------------------------------------------
63049 STANTON4  - 63041 COAL CR4   BASE:   178.5 CHNG:   191.1 DIFF:     7.0%

SUBTOTALS FOR: SONCOCCOCCCT        BASE:   178.5 CHNG:   191.1 DIFF:     7.0%
                                                 DIFF:    12.6   DF:     3.4%
*******************************************************************************

63041 COAL CR4  - 63049 STANTON4   *CONTINGENCY* BASE:     0.0 CHNG:     0.0
-------------------------------------------------------------------------------
63041 COAL CR4  - 63042 COAL TP4   BASE:  -169.5 CHNG:  -181.4 DIFF:     7.0%

SUBTOTALS FOR: SONCCTCOCSON        BASE:  -169.5 CHNG:  -181.4 DIFF:     7.0%
                                                 DIFF:   -11.9   DF:    -3.2%
*******************************************************************************

64095 MNTZUMA3  - 64064 BONDRNT3   *CONTINGENCY* BASE:     0.0 CHNG:     0.0
-------------------------------------------------------------------------------
34191 REASNOR5  - 64062 DMOINES5   BASE:   -60.6 CHNG:   -71.0 DIFF:    17.3%

SUBTOTALS FOR: READEMMTZBON        BASE:   -60.6 CHNG:   -71.0 DIFF:    17.3%
                                                 DIFF:   -10.5   DF:    -2.8%
*******************************************************************************
```

Appendix F.2: Constrained Interface Analysis – Without GI-0619
Case a12 (Without GI-0616 & GI-0707A) vs. a14 (With GI-0616 & GI-0707A)

```
***** BASE CASE:
A12-SP11AA.SAV;SUMMER;PK LD;SYSTEM INTACT           :
ND=1029,MH=1304,MW=797,OHMH=0,OHMP=151,EWTW=-119,BD=166

***** ERROR: GETTING LINE FLOW  67160 TO  67105 CKT 1 IERR= 2

***** CHNG CASE:
A14-SP11AA.SAV;SUMMER;PK LD;SYSTEM INTACT           :
ND=1341,MH=1304,MW=851,OHMH=0,OHMP=150,EWTW=-120,BD=167


***** BASE TRANSACTION AMOUNT FOR DF CALCULATION:   368.000


## PTDF INTERFACES ##

39247 ARCADN3   - 36420 ZION ; B   BASE:   -25.3 CHNG:    -9.9 DIFF:   -60.9%

SUBTOTALS FOR: ADNZIO__PTDF        BASE:   -25.3 CHNG:    -9.9 DIFF:   -60.9%
                                                 DIFF:    15.4   DF:     4.2%
*******************************************************************************

36407 WEMPL; R  - 39058 PAD 345    BASE:   276.2 CHNG:   272.6 DIFF:    -1.3%

SUBTOTALS FOR: WEMPAD__PTDF        BASE:   276.2 CHNG:   272.6 DIFF:    -1.3%
                                                 DIFF:    -3.6   DF:    -1.0%
*******************************************************************************

60304 EAU CL 3  - 39244 ARP 345    BASE:   335.3 CHNG:   368.2 DIFF:     9.8%

SUBTOTALS FOR: EAUARP__PTDF        BASE:   335.3 CHNG:   368.2 DIFF:     9.8%
                                                 DIFF:    33.0   DF:     9.0%
*******************************************************************************

69503 CASVILL5  - 39010 NED 161    BASE:   114.6 CHNG:   114.1 DIFF:    -0.4%

SUBTOTALS FOR: CSVNED__PTDF        BASE:   114.6 CHNG:   114.1 DIFF:    -0.4%
                                                 DIFF:    -0.5   DF:    -0.1%
*******************************************************************************

36406 WEMPL; B  - 39119 ROE 345    BASE:   519.3 CHNG:   509.2 DIFF:    -1.9%

SUBTOTALS FOR: WEMROE__PTDF        BASE:   519.3 CHNG:   509.2 DIFF:    -1.9%
                                                 DIFF:   -10.1   DF:    -2.7%
*******************************************************************************

31230 MONTGMRY  - 31992 SPENCER    BASE:   368.1 CHNG:   350.0 DIFF:    -4.9%

SUBTOTALS FOR: MTGSPC__PTDF        BASE:   368.1 CHNG:   350.0 DIFF:    -4.9%
                                                 DIFF:   -18.1   DF:    -4.9%
*******************************************************************************

31408 OVERTON   - 59201 SIBLEY 7   BASE:    11.5 CHNG:    -8.3 DIFF:  -171.6%

SUBTOTALS FOR: OVESIB__PTDF        BASE:    11.5 CHNG:    -8.3 DIFF:  -171.6%
                                                 DIFF:   -19.8   DF:    -5.4%
*******************************************************************************

39249 ALBRS-12  - 39410 PARIS WE   BASE:    74.8 CHNG:    71.2 DIFF:    -4.8%

SUBTOTALS FOR: ALBPRS__PTDF        BASE:    74.8 CHNG:    71.2 DIFF:    -4.8%
                                                 DIFF:    -3.6   DF:    -1.0%
*******************************************************************************

39253 ARCADN1   - 39329 GRANVL1    BASE:    18.9 CHNG:     0.4 DIFF:   -97.6%
```

```
SUBTOTALS FOR: ARCGVL__PTDF        BASE:    18.9 CHNG:     0.4 DIFF:   -97.6%
                                                DIFF:   -18.5   DF:    -5.0%
*******************************************************************************

38894 N APP 3   - 38928 WERNER W   BASE:   224.7 CHNG:   189.5 DIFF:   -15.7%

SUBTOTALS FOR: NAPRRN__PTDF        BASE:   224.7 CHNG:   189.5 DIFF:   -15.7%
                                                DIFF:   -35.2   DF:    -9.6%
*******************************************************************************

38849 PLS PR2   - 36421 ZION ; R   BASE:   589.7 CHNG:   619.4 DIFF:     5.0%

SUBTOTALS FOR: PLPZION_PTDF        BASE:   589.7 CHNG:   619.4 DIFF:     5.0%
                                                DIFF:    29.8   DF:     8.1%
*******************************************************************************

36420 ZION ; B  - 39247 ARCADN3    BASE:    25.4 CHNG:    10.0 DIFF:   -60.6%

SUBTOTALS FOR: ZIOARC__PTDF        BASE:    25.4 CHNG:    10.0 DIFF:   -60.6%
                                                DIFF:   -15.4   DF:    -4.2%
*******************************************************************************

36421 ZION ; R  - 38849 PLS PR2    BASE:  -588.3 CHNG:  -618.0 DIFF:     5.0%

SUBTOTALS FOR: ZIOPLP__PTDF        BASE:  -588.3 CHNG:  -618.0 DIFF:     5.0%
                                                DIFF:   -29.6   DF:    -8.1%
*******************************************************************************

34093 ARNOLD 3  - 34018 HAZLTON3   BASE:   157.0 CHNG:   136.6 DIFF:   -13.0%

SUBTOTALS FOR: ARNHAZ__PTDF        BASE:   157.0 CHNG:   136.6 DIFF:   -13.0%
                                                DIFF:   -20.4   DF:    -5.5%
*******************************************************************************

36382 QUAD ;    - 34036 ROCK CK3   BASE:   629.5 CHNG:   605.9 DIFF:    -3.7%
64400 MECCORD3  - 64403 E MOLIN3   BASE:   323.8 CHNG:   312.4 DIFF:    -3.5%

SUBTOTALS FOR: QUARCKCORMOL        BASE:   953.3 CHNG:   918.2 DIFF:    -3.7%
                                                DIFF:   -35.1   DF:    -9.5%
*******************************************************************************

34036 ROCK CK3  - 34037 ROCK CK5   BASE:   221.2 CHNG:   219.5 DIFF:    -0.8%

SUBTOTALS FOR: RCKXFM__PTDF        BASE:   221.2 CHNG:   219.5 DIFF:    -0.8%
                                                DIFF:    -1.7   DF:    -0.5%
*******************************************************************************

36382 QUAD ;    - 34036 ROCK CK3   BASE:   629.5 CHNG:   605.9 DIFF:    -3.7%

SUBTOTALS FOR: QUARCK__PTDF        BASE:   629.5 CHNG:   605.9 DIFF:    -3.7%
                                                DIFF:   -23.6   DF:    -6.4%
*******************************************************************************

67105 LELANDO3  - 66506 FTTHOMP3   BASE:   217.3 CHNG:   258.9 DIFF:    19.2%
67105 LELANDO3  - 67160 GROTON 3   BASE:     0.0 CHNG:     0.0 DIFF:   999.0%
67615  GI-0619  - 67160 GROTON 3   BASE:   261.1 CHNG:   423.2 DIFF:    62.1%
67101 ANTELOP3  - 67120 BRDLAND3   BASE:   251.1 CHNG:   279.1 DIFF:    11.1%
63314 BIGSTON4  - 66503 BLAIR  4   BASE:   122.3 CHNG:   119.6 DIFF:    -2.2%
66554 MORRIS 4  - 66550 GRANITF4   BASE:   -18.1 CHNG:   -14.4 DIFF:   -20.5%
63336 AUDUBON4  - 63053 HUBBARD4   BASE:   137.2 CHNG:   150.5 DIFF:     9.7%
66521 SULLYBT4  - 66519 OAHE   4   BASE:   -42.2 CHNG:   -27.8 DIFF:   -34.0%
63052 INMAN  4  - 61611 WINGRIV4   BASE:   125.8 CHNG:   138.6 DIFF:    10.2%
66470 BISON  4  - 66497 MAURINE4   BASE:     4.9 CHNG:    19.5 DIFF:   295.9%
66716 LAPORTE7  - 61638 AKELEY7    BASE:    27.5 CHNG:    28.5 DIFF:     3.7%
63222 ALEXAND7  - 60144 DGLASCO7   BASE:    36.5 CHNG:    41.0 DIFF:    12.4%
67327 ELLENDL7  - 67401 ABDNJCT7   BASE:    18.2 CHNG:    12.2 DIFF:   -33.0%
66432 EDGELEY7  - 66534 ORDWAY 7   BASE:   -10.2 CHNG:   -15.8 DIFF:    54.9%
66438 FORMAN 7  - 66522 SUMMIT-7   BASE:   -19.8 CHNG:   -22.2 DIFF:    12.4%
63211 CANBY  7  - 66551 GRANITF7   BASE:    25.5 CHNG:    27.6 DIFF:     8.3%
62006 KERKHO 7  - 62005 KERKHOT7   BASE:    -2.7 CHNG:    -1.6 DIFF:   -38.3%
66752 DRAYTON4  - 67557 LETELER4   BASE:  -156.6 CHNG:  -144.3 DIFF:    -7.8%
```

```
63379 RUGBY  4  - 67523 GLENBOR4   BASE:   101.6 CHNG:   118.9 DIFF:    17.0%
62001 BENSON 7  - 60374 FIBROMN7   BASE:   -50.0 CHNG:   -50.0 DIFF:     0.0%

SUBTOTALS FOR: NDEX                BASE:  1029.5 CHNG:  1341.5 DIFF:    30.3%
                                          DIFF:   312.0   DF:    84.8%
*******************************************************************************

60105 PR ISLD3  - 61950 BYRON  3   BASE:   150.6 CHNG:   187.0 DIFF:    24.1%
60304 EAU CL 3  - 39244 ARP 345    BASE:   335.3 CHNG:   368.2 DIFF:     9.8%

SUBTOTALS FOR: MWSI                BASE:   485.9 CHNG:   555.2 DIFF:    14.3%
                                          DIFF:    69.3   DF:    18.8%
*******************************************************************************

64832 GENTLMN4  - 64909 N.PLATT4   BASE:   177.1 CHNG:   176.9 DIFF:    -0.1%
64832 GENTLMN4  - 64909 N.PLATT4   BASE:   177.7 CHNG:   177.5 DIFF:    -0.1%
64832 GENTLMN4  - 64909 N.PLATT4   BASE:   181.6 CHNG:   181.4 DIFF:    -0.1%
64831 GENTLMN3  - 64984 SWEET W3   BASE:   284.9 CHNG:   283.9 DIFF:    -0.3%
64831 GENTLMN3  - 64984 SWEET W3   BASE:   343.7 CHNG:   342.6 DIFF:    -0.3%
64831 GENTLMN3  - 64943 REDWILO3   BASE:   340.4 CHNG:   356.2 DIFF:     4.7%

SUBTOTALS FOR: GGS                 BASE:  1505.4 CHNG:  1518.5 DIFF:     0.9%
                                          DIFF:    13.1   DF:     3.6%
*******************************************************************************

64831 GENTLMN3  - 64943 REDWILO3   BASE:   340.4 CHNG:   356.2 DIFF:     4.7%

SUBTOTALS FOR: WNE_WKS             BASE:   340.4 CHNG:   356.2 DIFF:     4.7%
                                          DIFF:    15.9   DF:     4.3%
*******************************************************************************

64933 PAULINE3  - 64902 MOORE  3   BASE:    82.6 CHNG:    91.1 DIFF:    10.4%
64839 GR ISLD4  - 64780 COLMB.W4   BASE:    76.9 CHNG:    75.2 DIFF:    -2.1%
66571 GR ISLD3  - 64896 MCCOOL 3   BASE:   214.5 CHNG:   235.0 DIFF:     9.6%

SUBTOTALS FOR: GRIS_LNC            BASE:   373.9 CHNG:   401.4 DIFF:     7.3%
                                          DIFF:    27.4   DF:     7.5%
*******************************************************************************

64786 COOPER 3  - 59393 ST JOE 3   BASE:   175.6 CHNG:   212.1 DIFF:    20.8%
64786 COOPER 3  - 96039 7FAIRPT    BASE:   163.5 CHNG:   189.0 DIFF:    15.6%

SUBTOTALS FOR: COOPER_S            BASE:   339.1 CHNG:   401.1 DIFF:    18.3%
                                          DIFF:    62.0   DF:    16.9%
*******************************************************************************

60105 PR ISLD3  - 61950 BYRON  3   BASE:   150.6 CHNG:   187.0 DIFF:    24.1%

SUBTOTALS FOR: PR_ISL_BYRON        BASE:   150.6 CHNG:   187.0 DIFF:    24.1%
                                          DIFF:    36.4   DF:     9.9%
*******************************************************************************

65351 S3451  3  - 65354 S3454  3   BASE:    71.6 CHNG:    83.6 DIFF:    16.7%
65351 S3451  3  - 65359 S3459  3   BASE:   117.0 CHNG:   136.3 DIFF:    16.5%
65451 S1251  5  - 65497 S1297  5   BASE:    43.1 CHNG:    46.7 DIFF:     8.5%

SUBTOTALS FOR: FTCAL_S             BASE:   231.7 CHNG:   266.6 DIFF:    15.1%
                                          DIFF:    34.9   DF:     9.5%
*******************************************************************************

36382 QUAD ;    - 64405 SUB 91 3   BASE:   463.1 CHNG:   444.5 DIFF:    -4.0%
64400 MECCORD3  - 64403 E MOLIN3   BASE:   323.8 CHNG:   312.4 DIFF:    -3.5%

SUBTOTALS FOR: QUADCITY_W          BASE:   787.0 CHNG:   756.9 DIFF:    -3.8%
                                          DIFF:   -30.1   DF:    -8.2%
*******************************************************************************

64095 MNTZUMA3  - 64064 BONDRNT3   BASE:   -61.9 CHNG:   -98.0 DIFF:    58.3%

SUBTOTALS FOR: MNTZUMA_W           BASE:   -61.9 CHNG:   -98.0 DIFF:    58.3%
                                          DIFF:   -36.1   DF:    -9.8%
```

```
*******************************************************************************

59394 ST JOE 5  - 59392 MIDWAY 5   BASE:    89.4 CHNG:    85.2 DIFF:    -4.7%

SUBTOTALS FOR: SJOMDY__PTDF        BASE:    89.4 CHNG:    85.2 DIFF:    -4.7%
                                                DIFF:    -4.2   DF:    -1.1%
*******************************************************************************

57982 IATAN  7  - 59393 ST JOE 3   BASE:   320.7 CHNG:   296.4 DIFF:    -7.6%

SUBTOTALS FOR: IATSJO__PTDF        BASE:   320.7 CHNG:   296.4 DIFF:    -7.6%
                                                DIFF:   -24.2   DF:    -6.6%
*******************************************************************************

64352 TIFFIN 3  - 34093 ARNOLD 3   BASE:   200.4 CHNG:   178.2 DIFF:   -11.1%

SUBTOTALS FOR: TIFARN__PTDF        BASE:   200.4 CHNG:   178.2 DIFF:   -11.1%
                                                DIFF:   -22.3   DF:    -6.1%
*******************************************************************************

60101 FORBES 2  - 60198 CHIS-N 2   BASE:   877.9 CHNG:   909.4 DIFF:     3.6%

SUBTOTALS FOR: FORCHS_PTDF         BASE:   877.9 CHNG:   909.4 DIFF:     3.6%
                                                DIFF:    31.5   DF:     8.6%
*******************************************************************************

34006 LAKEFLD3  - 60331 LKFLDXL3   BASE:   428.7 CHNG:   443.2 DIFF:     3.4%

SUBTOTALS FOR: LKFLKG__PTDF        BASE:   428.7 CHNG:   443.2 DIFF:     3.4%
                                                DIFF:    14.4   DF:     3.9%
*******************************************************************************


## OTDF INTERFACES ##

36382 QUAD ;    - 36368 H471 ;     *CONTINGENCY* BASE:     0.0 CHNG:     0.0
-------------------------------------------------------------------------------
36284 CORDO; B  - 36362 NELSO; B   BASE:   692.1 CHNG:   737.6 DIFF:     6.6%

SUBTOTALS FOR: CDVNELQUA471        BASE:   692.1 CHNG:   737.6 DIFF:     6.6%
                                                DIFF:    45.5   DF:    12.4%
*******************************************************************************

38849 PLS PR2   - 36421 ZION ; R   *CONTINGENCY* BASE:     0.0 CHNG:     0.0
-------------------------------------------------------------------------------
39247 ARCADN3   - 36420 ZION ; B   BASE:   260.5 CHNG:   290.7 DIFF:    11.6%

SUBTOTALS FOR: ADNZIOPLPZIO        BASE:   260.5 CHNG:   290.7 DIFF:    11.6%
                                                DIFF:    30.1   DF:     8.2%
*******************************************************************************

38849 PLS PR2   - 36421 ZION ; R   *CONTINGENCY* BASE:     0.0 CHNG:     0.0
-------------------------------------------------------------------------------
39362 LAKEVIEW  - 37384 ZION ;     BASE:   127.1 CHNG:   135.4 DIFF:     6.6%

SUBTOTALS FOR: LKVZIOZIOPLP        BASE:   127.1 CHNG:   135.4 DIFF:     6.6%
                                                DIFF:     8.3   DF:     2.3%
*******************************************************************************

36406 WEMPL; B  - 39119 ROE 345    *CONTINGENCY* BASE:     0.0 CHNG:     0.0
-------------------------------------------------------------------------------
60304 EAU CL 3  - 39244 ARP 345    BASE:   369.0 CHNG:   401.3 DIFF:     8.8%

SUBTOTALS FOR: EAUARPWMPPAD        BASE:   369.0 CHNG:   401.3 DIFF:     8.8%
                                                DIFF:    32.3   DF:     8.8%
*******************************************************************************

36406 WEMPL; B  - 39119 ROE 345    *CONTINGENCY* BASE:     0.0 CHNG:     0.0
-------------------------------------------------------------------------------
39058 PAD 345   - 39059 PAD 138    BASE:   480.6 CHNG:   473.2 DIFF:    -1.5%
```

```
SUBTOTALS FOR: PADXFMWEMROE        BASE:   480.6 CHNG:   473.2 DIFF:    -1.5%
                                               DIFF:    -7.4   DF:    -2.0%
*******************************************************************************

36407 WEMPL; R  - 39058 PAD 345    *CONTINGENCY* BASE:     0.0 CHNG:     0.0
-------------------------------------------------------------------------------
39010 NED 161   - 39020 NLD 1      BASE:     0.0 CHNG:     0.0 DIFF:   999.0%

SUBTOTALS FOR: NED_T1WEMPAD        BASE:     0.0 CHNG:     0.0 DIFF:   999.0%
                                               DIFF:     0.0   DF:     0.0%
*******************************************************************************

60304 EAU CL 3  - 39244 ARP 345    *CONTINGENCY* BASE:     0.0 CHNG:     0.0
-------------------------------------------------------------------------------
39010 NED 161   - 39020 NLD 1      BASE:     0.0 CHNG:     0.0 DIFF:   999.0%

SUBTOTALS FOR: NED_T1EARP_G        BASE:     0.0 CHNG:     0.0 DIFF:   999.0%
                                               DIFF:     0.0   DF:     0.0%
*******************************************************************************

60105 PR ISLD3  - 61950 BYRON  3   *CONTINGENCY* BASE:     0.0 CHNG:     0.0
-------------------------------------------------------------------------------
60304 EAU CL 3  - 39244 ARP 345    BASE:   350.5 CHNG:   387.1 DIFF:    10.4%

SUBTOTALS FOR: EAUARPPRIBYR        BASE:   350.5 CHNG:   387.1 DIFF:    10.4%
                                               DIFF:    36.6   DF:     9.9%
*******************************************************************************

39059 PAD 138   - 39141 TOWNLINE   *CONTINGENCY* BASE:     0.0 CHNG:     0.0
-------------------------------------------------------------------------------
39059 PAD 138   - 38057 NWT 138    BASE:   192.3 CHNG:   189.9 DIFF:    -1.3%
38057 NWT 138   - 39048 BLK 138    BASE:   127.5 CHNG:   125.3 DIFF:    -1.7%

SUBTOTALS FOR: PADBLKPADTLR        BASE:   319.8 CHNG:   315.1 DIFF:    -1.5%
                                               DIFF:    -4.7   DF:    -1.3%
*******************************************************************************

39059 PAD 138   - 39141 TOWNLINE   *CONTINGENCY* BASE:     0.0 CHNG:     0.0
-------------------------------------------------------------------------------
39048 BLK 138   - 39060 COR 138    BASE:   148.7 CHNG:   146.6 DIFF:    -1.4%

SUBTOTALS FOR: BLKCORPADTLR        BASE:   148.7 CHNG:   146.6 DIFF:    -1.4%
                                               DIFF:    -2.1   DF:    -0.6%
*******************************************************************************

36406 WEMPL; B  - 39119 ROE 345    *CONTINGENCY* BASE:     0.0 CHNG:     0.0
-------------------------------------------------------------------------------
39090 RSS 138   - 39120 ROE 138    BASE:   235.3 CHNG:   230.1 DIFF:    -2.2%

SUBTOTALS FOR: RSSROEWEMROE        BASE:   235.3 CHNG:   230.1 DIFF:    -2.2%
                                               DIFF:    -5.2   DF:    -1.4%
*******************************************************************************

39676 GARDR PK  - 39785 ROCKY RN   *CONTINGENCY* BASE:     0.0 CHNG:     0.0
-------------------------------------------------------------------------------
39786 ROCKY RN  - 39788 NORTHPT    BASE:     0.0 CHNG:     0.0 DIFF:   999.0%

SUBTOTALS FOR: RRNNPTRRNGPK        BASE:     0.0 CHNG:     0.0 DIFF:   999.0%
                                               DIFF:     0.0   DF:     0.0%
*******************************************************************************

36406 WEMPL; B  - 39119 ROE 345    *CONTINGENCY* BASE:     0.0 CHNG:     0.0
-------------------------------------------------------------------------------
39048 BLK 138   - 39060 COR 138    BASE:   186.2 CHNG:   184.1 DIFF:    -1.1%

SUBTOTALS FOR: BLKCRDWEMROE        BASE:   186.2 CHNG:   184.1 DIFF:    -1.1%
                                               DIFF:    -2.1   DF:    -0.6%
*******************************************************************************

39059 PAD 138   - 38057 NWT 138    *CONTINGENCY* BASE:     0.0 CHNG:     0.0
```

```
-------------------------------------------------------------------------------
39059 PAD 138   - 39141 TOWNLINE   BASE:   158.3 CHNG:   155.5 DIFF:    -1.8%

SUBTOTALS FOR: PADTLRPADBLK        BASE:   158.3 CHNG:   155.5 DIFF:    -1.8%
                                               DIFF:    -2.8   DF:    -0.8%
*******************************************************************************

39119 ROE 345   - 39120 ROE 138    *CONTINGENCY* BASE:     0.0 CHNG:     0.0
-------------------------------------------------------------------------------
39119 ROE 345   - 39120 ROE 138    BASE:   199.9 CHNG:   198.6 DIFF:    -0.7%

SUBTOTALS FOR: ROE_T2ROE_T3        BASE:   199.9 CHNG:   198.6 DIFF:    -0.7%
                                               DIFF:    -1.3   DF:    -0.4%
*******************************************************************************

39058 PAD 345   - 39059 PAD 138    *CONTINGENCY* BASE:     0.0 CHNG:     0.0
-------------------------------------------------------------------------------
39119 ROE 345   - 39120 ROE 138    BASE:   242.0 CHNG:   240.2 DIFF:    -0.8%

SUBTOTALS FOR: RKDLFLOPADDK        BASE:   242.0 CHNG:   240.2 DIFF:    -0.8%
                                               DIFF:    -1.9   DF:    -0.5%
*******************************************************************************

39244 ARP 345   - 39785 ROCKY RN   *CONTINGENCY* BASE:     0.0 CHNG:     0.0
-------------------------------------------------------------------------------
60315 T-CRNRS7  - 39706 WIEN       BASE:   -25.4 CHNG:   -19.2 DIFF:   -24.2%

SUBTOTALS FOR: TCRWIEARPRRN        BASE:   -25.4 CHNG:   -19.2 DIFF:   -24.2%
                                               DIFF:     6.1   DF:     1.7%
*******************************************************************************

60304 EAU CL 3  - 39244 ARP 345    *CONTINGENCY* BASE:     0.0 CHNG:     0.0
-------------------------------------------------------------------------------
60315 T-CRNRS7  - 39706 WIEN       BASE:    18.7 CHNG:    27.7 DIFF:    48.1%

SUBTOTALS FOR: TCRWIEEARP_G        BASE:    18.7 CHNG:    27.7 DIFF:    48.1%
                                               DIFF:     9.0   DF:     2.4%
*******************************************************************************

36406 WEMPL; B  - 39119 ROE 345    *CONTINGENCY* BASE:     0.0 CHNG:     0.0
-------------------------------------------------------------------------------
39059 PAD 138   - 39141 TOWNLINE   BASE:   168.9 CHNG:   164.6 DIFF:    -2.5%

SUBTOTALS FOR: PADTLRWEMROE        BASE:   168.9 CHNG:   164.6 DIFF:    -2.5%
                                               DIFF:    -4.2   DF:    -1.2%
*******************************************************************************

30395 COFFEEN   - 31445 PANA       *CONTINGENCY* BASE:     0.0 CHNG:     0.0
31445 PANA      - 36343 KINCA; R   *CONTINGENCY* BASE:     0.0 CHNG:     0.0
-------------------------------------------------------------------------------
31230 MONTGMRY  - 31992 SPENCER    BASE:   392.5 CHNG:   374.2 DIFF:    -4.7%

SUBTOTALS FOR: MTGSPCCOFPAN        BASE:   392.5 CHNG:   374.2 DIFF:    -4.7%
                                               DIFF:   -18.3   DF:    -5.0%
*******************************************************************************

30154 BLAND     - 96041 7FRANKS    *CONTINGENCY* BASE:     0.0 CHNG:     0.0
-------------------------------------------------------------------------------
31088 MCCREDIE  - 31408 OVERTON    BASE:   239.3 CHNG:   221.9 DIFF:    -7.3%

SUBTOTALS FOR: MCROVEBLAF_G        BASE:   239.3 CHNG:   221.9 DIFF:    -7.3%
                                               DIFF:   -17.4   DF:    -4.7%
*******************************************************************************

31088 MCCREDIE  - 31408 OVERTON    *CONTINGENCY* BASE:     0.0 CHNG:     0.0
-------------------------------------------------------------------------------
30154 BLAND     - 96041 7FRANKS    BASE:   371.1 CHNG:   369.0 DIFF:    -0.6%

SUBTOTALS FOR: BLAFRAMCROVE        BASE:   371.1 CHNG:   369.0 DIFF:    -0.6%
                                               DIFF:    -2.1   DF:    -0.6%
*******************************************************************************
```

```
36281 BYRON; R  - 36289 CHERR; R   *CONTINGENCY* BASE:     0.0 CHNG:     0.0
-------------------------------------------------------------------------------
36280 BYRON; B  - 36288 CHERR; B   BASE:  1301.9 CHNG:  1314.8 DIFF:     1.0%

SUBTOTALS FOR: BYNCHEBYNCHE        BASE:  1301.9 CHNG:  1314.8 DIFF:     1.0%
                                                 DIFF:    12.9   DF:     3.5%
*******************************************************************************

36281 BYRON; R  - 36406 WEMPL; B   *CONTINGENCY* BASE:     0.0 CHNG:     0.0
-------------------------------------------------------------------------------
36280 BYRON; B  - 36288 CHERR; B   BASE:  1151.4 CHNG:  1158.4 DIFF:     0.6%

SUBTOTALS FOR: BYCH_BBYNWEM        BASE:  1151.4 CHNG:  1158.4 DIFF:     0.6%
                                                 DIFF:     7.0   DF:     1.9%
*******************************************************************************

36280 BYRON; B  - 36288 CHERR; B   *CONTINGENCY* BASE:     0.0 CHNG:     0.0
-------------------------------------------------------------------------------
36281 BYRON; R  - 36289 CHERR; R   BASE:  1361.9 CHNG:  1375.5 DIFF:     1.0%

SUBTOTALS FOR: BYRCHEBYRCHE        BASE:  1361.9 CHNG:  1375.5 DIFF:     1.0%
                                                 DIFF:    13.6   DF:     3.7%
*******************************************************************************

36281 BYRON; R  - 36406 WEMPL; B   *CONTINGENCY* BASE:     0.0 CHNG:     0.0
-------------------------------------------------------------------------------
36281 BYRON; R  - 36289 CHERR; R   BASE:  1280.2 CHNG:  1288.2 DIFF:     0.6%

SUBTOTALS FOR: BYCH_RBYNWEM        BASE:  1280.2 CHNG:  1288.2 DIFF:     0.6%
                                                 DIFF:     8.0   DF:     2.2%
*******************************************************************************

36284 CORDO; B  - 36362 NELSO; B   *CONTINGENCY* BASE:     0.0 CHNG:     0.0
-------------------------------------------------------------------------------
36382 QUAD ;    - 36368 H471 ;     BASE:   695.8 CHNG:   741.6 DIFF:     6.6%

SUBTOTALS FOR: QUA471CDVNEL        BASE:   695.8 CHNG:   741.6 DIFF:     6.6%
                                                 DIFF:    45.8   DF:    12.4%
*******************************************************************************

36382 QUAD ;    - 36368 H471 ;     *CONTINGENCY* BASE:     0.0 CHNG:     0.0
-------------------------------------------------------------------------------
36382 QUAD ;    - 36284 CORDO; B   BASE:   268.7 CHNG:   287.3 DIFF:     6.9%
36284 CORDO; B  - 36362 NELSO; B   BASE:   692.1 CHNG:   737.6 DIFF:     6.6%

SUBTOTALS FOR: QUACDVQUA471        BASE:   960.8 CHNG:  1024.9 DIFF:     6.7%
                                                 DIFF:    64.1   DF:    17.4%
*******************************************************************************

36420 ZION ; B  - 39247 ARCADN3    *CONTINGENCY* BASE:     0.0 CHNG:     0.0
-------------------------------------------------------------------------------
36407 WEMPL; R  - 39058 PAD 345    BASE:   277.7 CHNG:   273.4 DIFF:    -1.5%

SUBTOTALS FOR: WEMPADZIOARC        BASE:   277.7 CHNG:   273.4 DIFF:    -1.5%
                                                 DIFF:    -4.3   DF:    -1.2%
*******************************************************************************

36421 ZION ; R  - 38849 PLS PR2    *CONTINGENCY* BASE:     0.0 CHNG:     0.0
-------------------------------------------------------------------------------
36407 WEMPL; R  - 39058 PAD 345    BASE:   224.0 CHNG:   217.7 DIFF:    -2.8%

SUBTOTALS FOR: WEMPADZIOPLP        BASE:   224.0 CHNG:   217.7 DIFF:    -2.8%
                                                 DIFF:    -6.3   DF:    -1.7%
*******************************************************************************

36289 CHERR; R  - 36389 SILVE; R   *CONTINGENCY* BASE:     0.0 CHNG:     0.0
-------------------------------------------------------------------------------
36407 WEMPL; R  - 39058 PAD 345    BASE:   357.1 CHNG:   355.7 DIFF:    -0.4%

SUBTOTALS FOR: WEMPADCHVSLA        BASE:   357.1 CHNG:   355.7 DIFF:    -0.4%
```

```
                                                DIFF:    -1.4   DF:    -0.4%
*******************************************************************************

36420 ZION ; B  - 39247 ARCADN3    *CONTINGENCY* BASE:     0.0 CHNG:     0.0
-------------------------------------------------------------------------------
36421 ZION ; R  - 38849 PLS PR2    BASE:  -569.7 CHNG:  -610.6 DIFF:     7.2%

SUBTOTALS FOR: ZIOPLPZIOARC        BASE:  -569.7 CHNG:  -610.6 DIFF:     7.2%
                                                DIFF:   -40.9   DF:   -11.1%
*******************************************************************************

36407 WEMPL; R  - 39058 PAD 345    *CONTINGENCY* BASE:     0.0 CHNG:     0.0
-------------------------------------------------------------------------------
36421 ZION ; R  - 38849 PLS PR2    BASE:  -523.1 CHNG:  -553.6 DIFF:     5.8%

SUBTOTALS FOR: ZIOPLPWEMPAD        BASE:  -523.1 CHNG:  -553.6 DIFF:     5.8%
                                                DIFF:   -30.5   DF:    -8.3%
*******************************************************************************

36421 ZION ; R  - 38849 PLS PR2    *CONTINGENCY* BASE:     0.0 CHNG:     0.0
-------------------------------------------------------------------------------
36420 ZION ; B  - 39247 ARCADN3    BASE:  -258.8 CHNG:  -288.6 DIFF:    11.5%

SUBTOTALS FOR: ZIOARCZIOPLP        BASE:  -258.8 CHNG:  -288.6 DIFF:    11.5%
                                                DIFF:   -29.7   DF:    -8.1%
*******************************************************************************

36362 NELSO; B  - 36310 ELECT; B   *CONTINGENCY* BASE:     0.0 CHNG:     0.0
-------------------------------------------------------------------------------
36289 CHERR; R  - 36389 SILVE; R   BASE:   975.4 CHNG:  1004.5 DIFF:     3.0%

SUBTOTALS FOR: CHESILNELELC        BASE:   975.4 CHNG:  1004.5 DIFF:     3.0%
                                                DIFF:    29.2   DF:     7.9%
*******************************************************************************

36289 CHERR; R  - 36389 SILVE; R   *CONTINGENCY* BASE:     0.0 CHNG:     0.0
-------------------------------------------------------------------------------
36362 NELSO; B  - 36310 ELECT; B   BASE:   815.6 CHNG:   851.0 DIFF:     4.3%

SUBTOTALS FOR: NELELCCHESIL        BASE:   815.6 CHNG:   851.0 DIFF:     4.3%
                                                DIFF:    35.4   DF:     9.6%
*******************************************************************************

36407 WEMPL; R  - 39058 PAD 345    *CONTINGENCY* BASE:     0.0 CHNG:     0.0
-------------------------------------------------------------------------------
37632 LEECO;BP  - 36362 NELSO; B   BASE:   406.2 CHNG:   390.8 DIFF:    -3.8%

SUBTOTALS FOR: LCONELWEMPAD        BASE:   406.2 CHNG:   390.8 DIFF:    -3.8%
                                                DIFF:   -15.4   DF:    -4.2%
*******************************************************************************

39253 ARCADN1   - 39329 GRANVL1    *CONTINGENCY* BASE:     0.0 CHNG:     0.0
-------------------------------------------------------------------------------
39268 BUTLER    - 39327 GRANVL 5   BASE:   -94.7 CHNG:  -104.5 DIFF:    10.3%

SUBTOTALS FOR: BTRGVLARCGVL        BASE:   -94.7 CHNG:  -104.5 DIFF:    10.3%
                                                DIFF:    -9.7   DF:    -2.6%
*******************************************************************************

36407 WEMPL; R  - 39058 PAD 345    *CONTINGENCY* BASE:     0.0 CHNG:     0.0
-------------------------------------------------------------------------------
38850 PLS PR3   - 39471 RACINE1    BASE:    50.9 CHNG:    33.5 DIFF:   -34.2%

SUBTOTALS FOR: PLPRACWEMPAD        BASE:    50.9 CHNG:    33.5 DIFF:   -34.2%
                                                DIFF:   -17.4   DF:    -4.7%
*******************************************************************************

38894 N APP 3   - 38928 WERNER W   *CONTINGENCY* BASE:     0.0 CHNG:     0.0
38928 WERNER W  - 39785 ROCKY RN   *CONTINGENCY* BASE:     0.0 CHNG:     0.0
-------------------------------------------------------------------------------
38892 ELLNGTN3  - 39534 HINTZ      BASE:    61.8 CHNG:    47.6 DIFF:   -22.9%
```

```
SUBTOTALS FOR: ELNHNZNAPRRN        BASE:    61.8 CHNG:    47.6 DIFF:   -22.9%
                                                DIFF:   -14.1   DF:    -3.8%
*******************************************************************************

38849 PLS PR2   - 36421 ZION ; R   *CONTINGENCY* BASE:     0.0 CHNG:     0.0
-------------------------------------------------------------------------------
39345 KENOSH45  - 39362 LAKEVIEW   BASE:   173.9 CHNG:   182.4 DIFF:     4.9%

SUBTOTALS FOR: KSHLKVPLPZIO        BASE:   173.9 CHNG:   182.4 DIFF:     4.9%
                                                DIFF:     8.5   DF:     2.3%
*******************************************************************************

38850 PLS PR3   - 39471 RACINE1    *CONTINGENCY* BASE:     0.0 CHNG:     0.0
-------------------------------------------------------------------------------
39432 PLS PR1   - 39253 ARCADN1    BASE:   171.9 CHNG:   152.6 DIFF:   -11.2%

SUBTOTALS FOR: PLPARCPLRRAC        BASE:   171.9 CHNG:   152.6 DIFF:   -11.2%
                                                DIFF:   -19.3   DF:    -5.2%
*******************************************************************************

36420 ZION ; B  - 39247 ARCADN3    *CONTINGENCY* BASE:     0.0 CHNG:     0.0
-------------------------------------------------------------------------------
39432 PLS PR1   - 39253 ARCADN1    BASE:   171.8 CHNG:   154.3 DIFF:   -10.2%

SUBTOTALS FOR: PLPARCZIOARC        BASE:   171.8 CHNG:   154.3 DIFF:   -10.2%
                                                DIFF:   -17.5   DF:    -4.7%
*******************************************************************************

36289 CHERR; R  - 36389 SILVE; R   *CONTINGENCY* BASE:     0.0 CHNG:     0.0
-------------------------------------------------------------------------------
38883 WHTWTR5   - 39357 MUKWONGO   BASE:     0.0 CHNG:     0.0 DIFF:   999.0%

SUBTOTALS FOR: WHIMUKCHESIL        BASE:     0.0 CHNG:     0.0 DIFF:   999.0%
                                                DIFF:     0.0   DF:     0.0%
*******************************************************************************

36289 CHERR; R  - 36389 SILVE; R   *CONTINGENCY* BASE:     0.0 CHNG:     0.0
-------------------------------------------------------------------------------
38849 PLS PR2   - 36421 ZION ; R   BASE:   705.0 CHNG:   737.9 DIFF:     4.7%

SUBTOTALS FOR: PLPZIOCHESIL        BASE:   705.0 CHNG:   737.9 DIFF:     4.7%
                                                DIFF:    32.9   DF:     8.9%
*******************************************************************************

36420 ZION ; B  - 39247 ARCADN3    *CONTINGENCY* BASE:     0.0 CHNG:     0.0
-------------------------------------------------------------------------------
38849 PLS PR2   - 36421 ZION ; R   BASE:   570.9 CHNG:   612.1 DIFF:     7.2%

SUBTOTALS FOR: PLPZIOZIOARC        BASE:   570.9 CHNG:   612.1 DIFF:     7.2%
                                                DIFF:    41.1   DF:    11.2%
*******************************************************************************

38850 PLS PR3   - 39471 RACINE1    *CONTINGENCY* BASE:     0.0 CHNG:     0.0
-------------------------------------------------------------------------------
39249 ALBRS-12  - 39410 PARIS WE   BASE:    78.0 CHNG:    72.5 DIFF:    -7.1%

SUBTOTALS FOR: ALBPARPLPRAC        BASE:    78.0 CHNG:    72.5 DIFF:    -7.1%
                                                DIFF:    -5.5   DF:    -1.5%
*******************************************************************************

39432 PLS PR1   - 39253 ARCADN1    *CONTINGENCY* BASE:     0.0 CHNG:     0.0
-------------------------------------------------------------------------------
38850 PLS PR3   - 39471 RACINE1    BASE:   102.8 CHNG:    79.7 DIFF:   -22.5%

SUBTOTALS FOR: PLPRACPLPADN        BASE:   102.8 CHNG:    79.7 DIFF:   -22.5%
                                                DIFF:   -23.1   DF:    -6.3%
*******************************************************************************

38894 N APP 3   - 38928 WERNER W   *CONTINGENCY* BASE:     0.0 CHNG:     0.0
38928 WERNER W  - 39785 ROCKY RN   *CONTINGENCY* BASE:     0.0 CHNG:     0.0
```

```
-------------------------------------------------------------------------------
39786 ROCKY RN  - 39790 WHITNG A   BASE:   198.8 CHNG:   203.3 DIFF:     2.3%

SUBTOTALS FOR: RRNWAVRRNNAP        BASE:   198.8 CHNG:   203.3 DIFF:     2.3%
                                           DIFF:     4.5   DF:     1.2%
*******************************************************************************

39785 ROCKY RN  - 39676 GARDR PK   *CONTINGENCY* BASE:     0.0 CHNG:     0.0
-------------------------------------------------------------------------------
39210 CW8 115   - 39686 WESTON     BASE:   -97.3 CHNG:   -98.5 DIFF:     1.2%

SUBTOTALS FOR: RRNWESRRNGPK        BASE:   -97.3 CHNG:   -98.5 DIFF:     1.2%
                                           DIFF:    -1.2   DF:    -0.3%
*******************************************************************************

36407 WEMPL; R  - 39058 PAD 345    *CONTINGENCY* BASE:     0.0 CHNG:     0.0
-------------------------------------------------------------------------------
34093 ARNOLD 3  - 34018 HAZLTON3   BASE:   164.8 CHNG:   144.4 DIFF:   -12.4%

SUBTOTALS FOR: ARNHAZWEMPAD        BASE:   164.8 CHNG:   144.4 DIFF:   -12.4%
                                           DIFF:   -20.5   DF:    -5.6%
*******************************************************************************

36407 WEMPL; R  - 39058 PAD 345    *CONTINGENCY* BASE:     0.0 CHNG:     0.0
-------------------------------------------------------------------------------
34028 LORE   5  - 34033 TRK RIV5   BASE:   161.7 CHNG:   160.0 DIFF:    -1.1%

SUBTOTALS FOR: LORTRKWEMPAD        BASE:   161.7 CHNG:   160.0 DIFF:    -1.1%
                                           DIFF:    -1.7   DF:    -0.5%
*******************************************************************************

34093 ARNOLD 3  - 34018 HAZLTON3   *CONTINGENCY* BASE:     0.0 CHNG:     0.0
-------------------------------------------------------------------------------
34007 LAKEFLD5  - 34008 FOX LK 5   BASE:    37.1 CHNG:    39.6 DIFF:     6.6%

SUBTOTALS FOR: LKJFOXARNHAZ        BASE:    37.1 CHNG:    39.6 DIFF:     6.6%
                                           DIFF:     2.4   DF:     0.7%
*******************************************************************************

36382 QUAD ;    - 64405 SUB 91 3   *CONTINGENCY* BASE:     0.0 CHNG:     0.0
-------------------------------------------------------------------------------
34036 ROCK CK3  - 34037 ROCK CK5   BASE:   272.9 CHNG:   269.2 DIFF:    -1.4%

SUBTOTALS FOR: RCKXFMQUADAV        BASE:   272.9 CHNG:   269.2 DIFF:    -1.4%
                                           DIFF:    -3.8   DF:    -1.0%
*******************************************************************************

36382 QUAD ;    - 64405 SUB 91 3   *CONTINGENCY* BASE:     0.0 CHNG:     0.0
-------------------------------------------------------------------------------
34035 ROCKCKW5  - 34124 DEWITT 5   BASE:    83.4 CHNG:    78.8 DIFF:    -5.5%

SUBTOTALS FOR: RCKDWTQUAS91        BASE:    83.4 CHNG:    78.8 DIFF:    -5.5%
                                           DIFF:    -4.5   DF:    -1.2%
*******************************************************************************

36382 QUAD ;    - 64405 SUB 91 3   *CONTINGENCY* BASE:     0.0 CHNG:     0.0
-------------------------------------------------------------------------------
34029 SALEM  3  - 34030 SALEM N5   BASE:   215.2 CHNG:   212.5 DIFF:    -1.2%

SUBTOTALS FOR: SALXFMQUAS91        BASE:   215.2 CHNG:   212.5 DIFF:    -1.2%
                                           DIFF:    -2.6   DF:    -0.7%
*******************************************************************************

64400 MECCORD3  - 64403 E MOLIN3   *CONTINGENCY* BASE:     0.0 CHNG:     0.0
-------------------------------------------------------------------------------
34029 SALEM  3  - 34030 SALEM N5   BASE:   205.6 CHNG:   203.4 DIFF:    -1.1%

SUBTOTALS FOR: SALXFMCORMOL        BASE:   205.6 CHNG:   203.4 DIFF:    -1.1%
                                           DIFF:    -2.2   DF:    -0.6%
*******************************************************************************
```

```
36382 QUAD ;    - 64405 SUB 91 3   *CONTINGENCY* BASE:     0.0 CHNG:     0.0
-------------------------------------------------------------------------------
34029 SALEM  3  - 34030 SALEM N5   BASE:   215.2 CHNG:   212.5 DIFF:    -1.2%

SUBTOTALS FOR: SALXFMQUADAV        BASE:   215.2 CHNG:   212.5 DIFF:    -1.2%
                                                 DIFF:    -2.6   DF:    -0.7%
*******************************************************************************

64350 HILLS  3  - 64095 MNTZUMA3   *CONTINGENCY* BASE:     0.0 CHNG:     0.0
-------------------------------------------------------------------------------
64352 TIFFIN 3  - 34093 ARNOLD 3   BASE:   165.5 CHNG:   135.9 DIFF:   -17.9%

SUBTOTALS FOR: TIFARNHILMON        BASE:   165.5 CHNG:   135.9 DIFF:   -17.9%
                                                 DIFF:   -29.6   DF:    -8.0%
*******************************************************************************

34093 ARNOLD 3  - 34018 HAZLTON3   *CONTINGENCY* BASE:     0.0 CHNG:     0.0
-------------------------------------------------------------------------------
34091 ARNOLD 5  - 34089 VINTON 5   BASE:   102.0 CHNG:    92.9 DIFF:    -9.0%

SUBTOTALS FOR: ARNVINARNHAZ        BASE:   102.0 CHNG:    92.9 DIFF:    -9.0%
                                                 DIFF:    -9.1   DF:    -2.5%
*******************************************************************************

36382 QUAD ;    - 34036 ROCK CK3   *CONTINGENCY* BASE:     0.0 CHNG:     0.0
-------------------------------------------------------------------------------
64425 DAVNPRT5  - 34122 E CALMS5   BASE:     0.0 CHNG:     0.0 DIFF:   999.0%

SUBTOTALS FOR: DAVCALQUARCK        BASE:     0.0 CHNG:     0.0 DIFF:   999.0%
                                                 DIFF:     0.0   DF:     0.0%
*******************************************************************************

64095 MNTZUMA3  - 64064 BONDRNT3   *CONTINGENCY* BASE:     0.0 CHNG:     0.0
-------------------------------------------------------------------------------
34052 AMES   7  - 34076 BNE JCT7   BASE:   -22.6 CHNG:   -24.5 DIFF:     8.3%

SUBTOTALS FOR: AMEBJCMTZBON        BASE:   -22.6 CHNG:   -24.5 DIFF:     8.3%
                                                 DIFF:    -1.9   DF:    -0.5%
*******************************************************************************

34006 LAKEFLD3  - 60331 LKFLDXL3   *CONTINGENCY* BASE:     0.0 CHNG:     0.0
-------------------------------------------------------------------------------
34007 LAKEFLD5  - 34008 FOX LK 5   BASE:    78.7 CHNG:    82.9 DIFF:     5.3%

SUBTOTALS FOR: LAKFOXLAKLKF        BASE:    78.7 CHNG:    82.9 DIFF:     5.3%
                                                 DIFF:     4.2   DF:     1.1%
*******************************************************************************

34093 ARNOLD 3  - 34018 HAZLTON3   *CONTINGENCY* BASE:     0.0 CHNG:     0.0
-------------------------------------------------------------------------------
34087 DYSART 5  - 64269 WASHBRN5   BASE:   135.8 CHNG:   129.6 DIFF:    -4.6%

SUBTOTALS FOR: DYSWASARNHAZ        BASE:   135.8 CHNG:   129.6 DIFF:    -4.6%
                                                 DIFF:    -6.3   DF:    -1.7%
*******************************************************************************

64080 SYCAMOR3  - 64198 GRIMES 3   *CONTINGENCY* BASE:     0.0 CHNG:     0.0
-------------------------------------------------------------------------------
64067 BONDRNT5  - 34529 HUXLEYT5   BASE:    56.9 CHNG:    55.2 DIFF:    -3.1%

SUBTOTALS FOR: BONBJCSYCLEH        BASE:    56.9 CHNG:    55.2 DIFF:    -3.1%
                                                 DIFF:    -1.7   DF:    -0.5%
*******************************************************************************

64202 LEHIGH 3  - 64200 WEBSTER3   *CONTINGENCY* BASE:     0.0 CHNG:     0.0
-------------------------------------------------------------------------------
64067 BONDRNT5  - 34529 HUXLEYT5   BASE:   107.8 CHNG:   106.2 DIFF:    -1.4%

SUBTOTALS FOR: BONBJCLEHWBS        BASE:   107.8 CHNG:   106.2 DIFF:    -1.4%
                                                 DIFF:    -1.6   DF:    -0.4%
*******************************************************************************
```

```
34007 LAKEFLD5  - 34137 TRIBOJI5   *CONTINGENCY* BASE:     0.0 CHNG:     0.0
-------------------------------------------------------------------------------
34007 LAKEFLD5  - 34008 FOX LK 5   BASE:    44.4 CHNG:    47.4 DIFF:     6.8%

SUBTOTALS FOR: LKJFOXLKJTRI        BASE:    44.4 CHNG:    47.4 DIFF:     6.8%
                                                DIFF:     3.0   DF:     0.8%
*******************************************************************************

60304 EAU CL 3  - 39244 ARP 345    *CONTINGENCY* BASE:     0.0 CHNG:     0.0
-------------------------------------------------------------------------------
34020 HAZL S 5  - 34135 DUNDEE 5   BASE:    63.4 CHNG:    68.9 DIFF:     8.6%

SUBTOTALS FOR: HAZDUNEAUARP        BASE:    63.4 CHNG:    68.9 DIFF:     8.6%
                                                DIFF:     5.4   DF:     1.5%
*******************************************************************************

63875 RAUN   3  - 34006 LAKEFLD3   *CONTINGENCY* BASE:     0.0 CHNG:     0.0
-------------------------------------------------------------------------------
66563 SPENCER5  - 34137 TRIBOJI5   BASE:   -80.5 CHNG:   -88.2 DIFF:     9.6%

SUBTOTALS FOR: SPETRILAKRAU        BASE:   -80.5 CHNG:   -88.2 DIFF:     9.6%
                                                DIFF:    -7.7   DF:    -2.1%
*******************************************************************************

36407 WEMPL; R  - 39058 PAD 345    *CONTINGENCY* BASE:     0.0 CHNG:     0.0
-------------------------------------------------------------------------------
34029 SALEM  3  - 34030 SALEM N5   BASE:   199.6 CHNG:   197.7 DIFF:    -0.9%

SUBTOTALS FOR: SALXFMWEMPAD        BASE:   199.6 CHNG:   197.7 DIFF:    -0.9%
                                                DIFF:    -1.9   DF:    -0.5%
*******************************************************************************

64352 TIFFIN 3  - 34093 ARNOLD 3   *CONTINGENCY* BASE:     0.0 CHNG:     0.0
-------------------------------------------------------------------------------
64350 HILLS  3  - 34110 HILLSIE5   BASE:   113.2 CHNG:   107.8 DIFF:    -4.8%

SUBTOTALS FOR: HILXFMTIFARN        BASE:   113.2 CHNG:   107.8 DIFF:    -4.8%
                                                DIFF:    -5.4   DF:    -1.5%
*******************************************************************************

36407 WEMPL; R  - 39058 PAD 345    *CONTINGENCY* BASE:     0.0 CHNG:     0.0
-------------------------------------------------------------------------------
34032 8TH ST.5  - 34028 LORE   5   BASE:     0.0 CHNG:     0.0 DIFF:   999.0%

SUBTOTALS FOR: 8STKERWEMPAD        BASE:     0.0 CHNG:     0.0 DIFF:   999.0%
                                                DIFF:     0.0   DF:     0.0%
*******************************************************************************

34093 ARNOLD 3  - 34018 HAZLTON3   *CONTINGENCY* BASE:     0.0 CHNG:     0.0
-------------------------------------------------------------------------------
34032 8TH ST.5  - 34028 LORE   5   BASE:     0.0 CHNG:     0.0 DIFF:   999.0%

SUBTOTALS FOR: 8STKERARNHAZ        BASE:     0.0 CHNG:     0.0 DIFF:   999.0%
                                                DIFF:     0.0   DF:     0.0%
*******************************************************************************

36382 QUAD ;    - 36368 H471 ;     *CONTINGENCY* BASE:     0.0 CHNG:     0.0
-------------------------------------------------------------------------------
34045 ALBANY 6  - 36773 GARDE;     BASE:    51.4 CHNG:    57.3 DIFF:    11.5%

SUBTOTALS FOR: ALBGARQUAST         BASE:    51.4 CHNG:    57.3 DIFF:    11.5%
                                                DIFF:     5.9   DF:     1.6%
*******************************************************************************

64095 MNTZUMA3  - 64064 BONDRNT3   *CONTINGENCY* BASE:     0.0 CHNG:     0.0
-------------------------------------------------------------------------------
34066 M-TOWN 7  - 34071 FERNALD7   BASE:    19.7 CHNG:    16.9 DIFF:   -14.2%

SUBTOTALS FOR: MRTFERMTZBON        BASE:    19.7 CHNG:    16.9 DIFF:   -14.2%
                                                DIFF:    -2.8   DF:    -0.8%
```

```
*******************************************************************************

64202 LEHIGH 3  - 64200 WEBSTER3   *CONTINGENCY* BASE:     0.0 CHNG:     0.0
-------------------------------------------------------------------------------
34015 LIME CK5  - 34016 EMERY  5   BASE:   -44.8 CHNG:   -43.0 DIFF:    -4.0%

SUBTOTALS FOR: LIMEMELEHWEB        BASE:   -44.8 CHNG:   -43.0 DIFF:    -4.0%
                                                 DIFF:     1.8   DF:     0.5%
*******************************************************************************

36407 WEMPL; R  - 39058 PAD 345    *CONTINGENCY* BASE:     0.0 CHNG:     0.0
-------------------------------------------------------------------------------
34028 LORE   5  - 34033 TRK RIV5   BASE:   161.7 CHNG:   160.0 DIFF:    -1.1%

SUBTOTALS FOR: LORTRKWPAD_G        BASE:   161.7 CHNG:   160.0 DIFF:    -1.1%
                                                 DIFF:    -1.7   DF:    -0.5%
*******************************************************************************

34093 ARNOLD 3  - 34018 HAZLTON3   *CONTINGENCY* BASE:     0.0 CHNG:     0.0
-------------------------------------------------------------------------------
34089 VINTON 5  - 34087 DYSART 5   BASE:    97.3 CHNG:    88.2 DIFF:    -9.3%

SUBTOTALS FOR: VINDYSARNHAZ        BASE:    97.3 CHNG:    88.2 DIFF:    -9.3%
                                                 DIFF:    -9.0   DF:    -2.5%
*******************************************************************************

60102 ADAMS  3  - 34018 HAZLTON3   *CONTINGENCY* BASE:     0.0 CHNG:     0.0
-------------------------------------------------------------------------------
34015 LIME CK5  - 34016 EMERY  5   BASE:   -54.1 CHNG:   -48.5 DIFF:   -10.4%

SUBTOTALS FOR: LIMEMEADAHAZ        BASE:   -54.1 CHNG:   -48.5 DIFF:   -10.4%
                                                 DIFF:     5.6   DF:     1.5%
*******************************************************************************

36407 WEMPL; R  - 39058 PAD 345    *CONTINGENCY* BASE:     0.0 CHNG:     0.0
-------------------------------------------------------------------------------
34030 SALEM N5  - 34508 JULIAN 5   BASE:    79.7 CHNG:    76.9 DIFF:    -3.4%

SUBTOTALS FOR: SALJCRWEMPAD        BASE:    79.7 CHNG:    76.9 DIFF:    -3.4%
                                                 DIFF:    -2.7   DF:    -0.7%
*******************************************************************************

60331 LKFLDXL3  - 60364 FIELD_N3   *CONTINGENCY* BASE:     0.0 CHNG:     0.0
-------------------------------------------------------------------------------
34007 LAKEFLD5  - 34008 FOX LK 5   BASE:   107.0 CHNG:   111.4 DIFF:     4.1%

SUBTOTALS FOR: LKFFOXLKFWLM        BASE:   107.0 CHNG:   111.4 DIFF:     4.1%
                                                 DIFF:     4.4   DF:     1.2%
*******************************************************************************

64095 MNTZUMA3  - 64064 BONDRNT3   *CONTINGENCY* BASE:     0.0 CHNG:     0.0
-------------------------------------------------------------------------------
34093 ARNOLD 3  - 34018 HAZLTON3   BASE:   147.5 CHNG:   121.7 DIFF:   -17.5%

SUBTOTALS FOR: ARNHAZMTZBON        BASE:   147.5 CHNG:   121.7 DIFF:   -17.5%
                                                 DIFF:   -25.9   DF:    -7.0%
*******************************************************************************

64352 TIFFIN 3  - 34093 ARNOLD 3   *CONTINGENCY* BASE:     0.0 CHNG:     0.0
-------------------------------------------------------------------------------
34029 SALEM  3  - 34030 SALEM N5   BASE:   196.8 CHNG:   194.7 DIFF:    -1.1%

SUBTOTALS FOR: SALXFMTIFARN        BASE:   196.8 CHNG:   194.7 DIFF:    -1.1%
                                                 DIFF:    -2.1   DF:    -0.6%
*******************************************************************************

64350 HILLS  3  - 64352 TIFFIN 3   *CONTINGENCY* BASE:     0.0 CHNG:     0.0
-------------------------------------------------------------------------------
34029 SALEM  3  - 34030 SALEM N5   BASE:   196.8 CHNG:   194.8 DIFF:    -1.0%

SUBTOTALS FOR: SALXFMHL3TIF        BASE:   196.8 CHNG:   194.8 DIFF:    -1.0%
```

```
                                                DIFF:    -2.0   DF:    -0.5%
*******************************************************************************

64095 MNTZUMA3  - 64064 BONDRNT3   *CONTINGENCY* BASE:     0.0 CHNG:     0.0
-------------------------------------------------------------------------------
64352 TIFFIN 3  - 34093 ARNOLD 3   BASE:   186.6 CHNG:   156.4 DIFF:   -16.2%

SUBTOTALS FOR: TIFARNMTZBON        BASE:   186.6 CHNG:   156.4 DIFF:   -16.2%
                                                DIFF:   -30.2   DF:    -8.2%
*******************************************************************************

34091 ARNOLD 5  - 34090 ARNOLD1G   *CONTINGENCY* BASE:     0.0 CHNG:     0.0
-------------------------------------------------------------------------------
64350 HILLS  3  - 34110 HILLSIE5   BASE:   122.1 CHNG:   120.2 DIFF:    -1.5%

SUBTOTALS FOR: HILXFMARNXFM        BASE:   122.1 CHNG:   120.2 DIFF:    -1.5%
                                                DIFF:    -1.9   DF:    -0.5%
*******************************************************************************

34016 EMERY  5  - 64252 FLOYD  5   *CONTINGENCY* BASE:     0.0 CHNG:     0.0
-------------------------------------------------------------------------------
34016 EMERY  5  - 34015 LIME CK5   BASE:   102.2 CHNG:   101.4 DIFF:    -0.7%

SUBTOTALS FOR: EMELIMEMEFYD        BASE:   102.2 CHNG:   101.4 DIFF:    -0.7%
                                                DIFF:    -0.8   DF:    -0.2%
*******************************************************************************

56769 LANG   7  - 56796 WICHITA7   *CONTINGENCY* BASE:     0.0 CHNG:     0.0
-------------------------------------------------------------------------------
57981 LACYGNE7  - 56793 NEOSHO 7   BASE:   296.6 CHNG:   314.7 DIFF:     6.1%

SUBTOTALS FOR: LACNEOLANWIC        BASE:   296.6 CHNG:   314.7 DIFF:     6.1%
                                                DIFF:    18.1   DF:     4.9%
*******************************************************************************

59396 LAKE RD5  - 58028 NASHUA-5   *CONTINGENCY* BASE:     0.0 CHNG:     0.0
57982 IATAN  7  - 56772 STRANGR7   *CONTINGENCY* BASE:     0.0 CHNG:     0.0
-------------------------------------------------------------------------------
59393 ST JOE 3  - 57972 HAWTH  7   BASE:   429.6 CHNG:   474.3 DIFF:    10.4%

SUBTOTALS FOR: SJOHTHIATSTC        BASE:   429.6 CHNG:   474.3 DIFF:    10.4%
                                                DIFF:    44.7   DF:    12.1%
*******************************************************************************

57981 LACYGNE7  - 57968 STILWEL7   *CONTINGENCY* BASE:     0.0 CHNG:     0.0
-------------------------------------------------------------------------------
57981 LACYGNE7  - 57965 W.GRDNR7   BASE:  1005.5 CHNG:   987.6 DIFF:    -1.8%

SUBTOTALS FOR: LACWGRLACSTI        BASE:  1005.5 CHNG:   987.6 DIFF:    -1.8%
                                                DIFF:   -18.0   DF:    -4.9%
*******************************************************************************

56873 SUMMIT 6  - 56872 EMCPHER6   *CONTINGENCY* BASE:     0.0 CHNG:     0.0
-------------------------------------------------------------------------------
57374 SPHILPJ3  - 57438 WMCPHER3   BASE:    -7.2 CHNG:    -8.1 DIFF:    11.7%
57374 SPHILPJ3  - 57438 WMCPHER3   BASE:    -8.1 CHNG:    -9.1 DIFF:    12.5%

SUBTOTALS FOR: SPHWMCSUMEMC        BASE:   -15.4 CHNG:   -17.2 DIFF:    12.1%
                                                DIFF:    -1.9   DF:    -0.5%
*******************************************************************************

59396 LAKE RD5  - 58028 NASHUA-5   *CONTINGENCY* BASE:     0.0 CHNG:     0.0
59393 ST JOE 3  - 57972 HAWTH  7   *CONTINGENCY* BASE:     0.0 CHNG:     0.0
-------------------------------------------------------------------------------
57982 IATAN  7  - 56772 STRANGR7   BASE:   493.5 CHNG:   536.6 DIFF:     8.7%

SUBTOTALS FOR: IATSTRLRDNUA        BASE:   493.5 CHNG:   536.6 DIFF:     8.7%
                                                DIFF:    43.0   DF:    11.7%
*******************************************************************************

65351 S3451  3  - 63875 RAUN   3   *CONTINGENCY* BASE:     0.0 CHNG:     0.0
```

```
-------------------------------------------------------------------------------
65426 S1226  5  - 64987 TEKAMAH5   BASE:   -32.9 CHNG:   -45.1 DIFF:    37.0%

SUBTOTALS FOR: S12TEKS34RAU        BASE:   -32.9 CHNG:   -45.1 DIFF:    37.0%
                                                 DIFF:   -12.2   DF:    -3.3%
*******************************************************************************

36382 QUAD ;    - 34036 ROCK CK3   *CONTINGENCY* BASE:     0.0 CHNG:     0.0
-------------------------------------------------------------------------------
36382 QUAD ;    - 64405 SUB 91 3   BASE:   699.4 CHNG:   671.9 DIFF:    -3.9%

SUBTOTALS FOR: QUAS91QUARCK        BASE:   699.4 CHNG:   671.9 DIFF:    -3.9%
                                                 DIFF:   -27.4   DF:    -7.5%
*******************************************************************************

34018 HAZLTON3  - 60102 ADAMS  3   *CONTINGENCY* BASE:     0.0 CHNG:     0.0
-------------------------------------------------------------------------------
60102 ADAMS  3  - 34014 ADAMS  5   BASE:   127.8 CHNG:   138.3 DIFF:     8.2%

SUBTOTALS FOR: ADMXFMHAZADM        BASE:   127.8 CHNG:   138.3 DIFF:     8.2%
                                                 DIFF:    10.5   DF:     2.9%
*******************************************************************************

96039 7FAIRPT   - 64786 COOPER 3   *CONTINGENCY* BASE:     0.0 CHNG:     0.0
96039 7FAIRPT   - 59393 ST JOE 3   *CONTINGENCY* BASE:     0.0 CHNG:     0.0
-------------------------------------------------------------------------------
59394 ST JOE 5  - 59392 MIDWAY 5   BASE:   123.7 CHNG:   120.0 DIFF:    -3.0%

SUBTOTALS FOR: STJMIDSTJFRC        BASE:   123.7 CHNG:   120.0 DIFF:    -3.0%
                                                 DIFF:    -3.7   DF:    -1.0%
*******************************************************************************

64350 HILLS  3  - 64095 MNTZUMA3   *CONTINGENCY* BASE:     0.0 CHNG:     0.0
-------------------------------------------------------------------------------
34110 HILLSIE5  - 34109 BERTRAM5   BASE:    76.1 CHNG:    73.0 DIFF:    -4.2%

SUBTOTALS FOR: HL5PRLHL3MTZ        BASE:    76.1 CHNG:    73.0 DIFF:    -4.2%
                                                 DIFF:    -3.2   DF:    -0.9%
*******************************************************************************

63041 COAL CR4  - 63042 COAL TP4   *CONTINGENCY* BASE:     0.0 CHNG:     0.0
-------------------------------------------------------------------------------
63049 STANTON4  - 63041 COAL CR4   BASE:   170.8 CHNG:   180.7 DIFF:     5.8%

SUBTOTALS FOR: SONCOCCOCCCT        BASE:   170.8 CHNG:   180.7 DIFF:     5.8%
                                                 DIFF:     9.9   DF:     2.7%
*******************************************************************************

63041 COAL CR4  - 63049 STANTON4   *CONTINGENCY* BASE:     0.0 CHNG:     0.0
-------------------------------------------------------------------------------
63041 COAL CR4  - 63042 COAL TP4   BASE:  -162.2 CHNG:  -171.6 DIFF:     5.8%

SUBTOTALS FOR: SONCCTCOCSON        BASE:  -162.2 CHNG:  -171.6 DIFF:     5.8%
                                                 DIFF:    -9.4   DF:    -2.6%
*******************************************************************************

64095 MNTZUMA3  - 64064 BONDRNT3   *CONTINGENCY* BASE:     0.0 CHNG:     0.0
-------------------------------------------------------------------------------
34191 REASNOR5  - 64062 DMOINES5   BASE:   -51.0 CHNG:   -62.0 DIFF:    21.6%

SUBTOTALS FOR: READEMMTZBON        BASE:   -51.0 CHNG:   -62.0 DIFF:    21.6%
                                                 DIFF:   -11.0   DF:    -3.0%
*******************************************************************************
```