Final Report

System Impact Study - Project # GI-0503
100 MW Wind Farm in Ward County, ND
Queue #: 38380-03

March 27, 2008

Prepared for:
Western Area Power Administration

Prepared by:
ABB Inc.

940 Main Campus Drive, Suite 300
Raleigh, NC 27606

12 Cornell Road
Latham, NY 12110

ESC Report No. 2007-11624-013-1.R2

Authors: S. Liu

Reviewed by: S. Pillutla

Approved by:

Executive Summary

Western Area Power Administration (WAPA) commissioned ABB Inc., to perform a System Impact Study for the interconnection of Project # GI-0503, a 100 MW Wind Farm to be located in Ward County, ND. The proposed wind farm (also known as Minot Wind Farm) has requested interconnection on the Max-Mallard 115 kV line at a distance of approximately 10 miles north of Max (for study purposes, it is assumed that there will be a three-breaker ring bus at the point of interconnection). The proposed in-service date is October 1, 2009.

This system impact study evaluated the impact of the proposed wind farm on transmission system performance and comprised stability, steady-state, constrained interface and short-circuit analysis.

The scope of the system impact study is limited to identifying and resolving possible criteria violations that may limit the ability of the generator to interconnect. In accordance with WAPA system impact study practices, an interconnection request is required to mitigate stability impacts, short-circuit impacts and injection related steady-state impacts (local area thermal and voltage impacts under system intact and contingency conditions). Any results related to the delivery of power from this project are for informational purposes only. A separate Delivery Study will be performed to identify delivery related impacts and associated system upgrades, if any.

During the course of the study, WAPA indicated that the generation developer submitted a subsequent request (GI-0720) for an additional 25 MW at this same location. Therefore, additional sensitivities were performed with the wind farm output increased to 125 MW.

The following is a summary of study results:

Stability Analysis:
The impact of the proposed wind farm on local area and regional stability performance was evaluated. Results indicate that the proposed wind farm (whether at 100 MW or at 125 MW) would not adversely impact local area stability.

For regional contingencies, transient voltage violations were observed at Jamestown 345 following fault *fd3* (5 cycle 3-phase fault on Square Butte-Stanton 230 kV line) both without and with the proposed wind farm. The impact of the proposed wind farm on the minimum transient voltages at Jamestown is 1% (i.e., there is a 1% degradation in the transient voltages). The pre-project *fd3* violations are a known issue. One possible solution that has been proposed by area transmission owners is to reduce the *fd3* fault clearing time from 5 cycles to 4 cycles by replacing the existing breakers at Square Butte 230 on the Stanton line with faster two-cycle breakers. Fault *fd3* was tested with the 4 cycle fault clearing time and no pre- and post-project criteria violations were found.

Fault *nmz* (fault on Chisago - Forbes 500 kV line) resulted in transient voltage violations at Arrowhead 230 kV, both before and after the addition of the proposed wind farm. The impact of the proposed wind farm on the transient voltages following these faults is insignificant (less than 0.01 pu). Sensitivity analysis shows transient voltage violations resulted by fault *nmz* are sensitive to flows on the F601C line. With F601C at 1765 MW, post-project *nmz* fault performance is acceptable and meets NMORWG stability criteria.

<u>Steady-State Analysis</u>:
The interconnection of the proposed GI-503 wind farm impacted several transmission facilities and resulted in steady-state criteria violations based upon the modeled delivery of the generator's output. A separate Delivery Study will be performed to identify delivery related impacts and associated system upgrades, if any.

Worst case steady-state analysis was done with B10T at 165 MW North and Minot Wind at 125 MW. Analysis was performed both for a near-term case (2009 timeframe) and an out-year case (2015 timeframe). The following conclusions are drawn:

- Results of the near-term and out-year analyses show that terminal equipment replacements / adjustments would be required on the Max-Minot Wind-Mallard 115 kV line to allow this line to be increased to its conductor loading limit of 187 MVA.

- Post-contingency overloads were observed on the Minot Wind – Mallard 115 kV line following the Leland Olds – Logan 230 kV outage both in the near-term and out-year cases at the ultimate 125 MW output level (post-contingency loadings above the aforementioned 187 MVA thermal rating).

  For the near-term scenario, these overloads are mitigated by existing B10T operation and through the implementation of the existing B10T Operating Guide (B10T reduced to 75 MW North) to reduce the loading below 187 MVA at the ultimate 125 MW output level.

  In addition, for the out-year scenario at 100 MW Minot wind output, overloads on the Minot Wind – Mallard 115 kV line above the 187 MVA thermal level are mitigated by existing B10T operations and the existing B10T Operating Guide.

For the out-year scenario with the wind at the ultimate 125 MW output level however, additional operating procedures (over and above the B10T Operating Guide) will be needed to reduce the loading below 187 MVA at the ultimate 125 MW output level. This will need to be addressed and may likely involve generation runback at Minot Wind. Remedial Action Scheme (RAS) with local sensing may be considered to drop the wind farm if loading on the Max-Mallard line approaches the thermal limit. The RAS may be needed to reduce the loading on this line below the thermal limit for loss of Leland Olds-Logan 230 kV in the 2015 out year timeframe at the ultimate 125 MW output level.

- One other potential loading concern that was identified in under B10T South scenarios was the loading on the Garrison-Beulah 115 kV line (see Section 4.4). A new overload was observed on this line following contingency '105 1' (loss of Bismark-Garrison, Bismark-Washburn and Garrison-Leland Olds 230 kV lines). The worst case post-contingency loading was observed in the near-term analysis on this line at 131.5 MW which is 104.9% of Rate A (120 MVA). Rate C of this line is 132 MVA. No overload was seen in the out-year analysis. Existing operating procedures such as the Garrison Unit Tripping Scheme may be utilized to reduce loading to acceptable levels, if necessary.

Constrained Interface Analysis:

The study also evaluated the impact of the proposed project on constrained interfaces in the MAPP system. These results are for informational purposes only to identify potential third party flowgate issues for the requested delivery component of the transmission. Results indicate that the proposed project does not adversely impact the MAPP interfaces.

Short-Circuit Analysis:

The addition of the proposed GI-0503 project increases fault currents in the study area. Breaker ratings were not available for the impacted substations. When this information does become available, the calculated fault currents should be compared against the breaker ratings in order to determine whether existing breakers at these substations could become overstressed and whether breaker replacements may be required.

The results of this study are based on available data and assumptions made at the time of conducting this study. If any of the data and/or assumptions made in developing the study models change, the results provided in this report may not apply.

Conceptual Cost Estimate

The following conceptual cost estimate is provided for system improvements associated with the interconnection of GI-0503. This is only a conceptual cost estimate for planning purposes. Detailed budgetary costing will be made available upon completion of the Facility Studies.

Facility Addition	Quanity	Unit Cost	Total
115 kV Terminal POI			
Planning & Design	1	$ 130,000	$ 130,000
Site Prep	1	$ 50,000	$ 50,000
Circuit Switchers	3	$ 45,000	$ 135,000
Disconnect Switches	6	$ 10,000	$ 60,000
Control	1	$ 115,000	$ 115,000
Construction Contract	1	$ 751,000	$ 751,000
Upgrades to Increase Garrison-Max-Mallard 115 to 187 MVA			
Uprates to Garrison Terminal (Breaker 1262)			
GA breaker bushing CT uprate from 600:5 to 1000:5	1	$ 1,000	$ 1,000
Uprates to Max Tap			
MX line disconnects upgrade from 600 amps to 1000 amps	2	$ 18,000	$ 36,000
MX bus work capable of minimum of 1000 amps	1	$ 50,000	$ 50,000
Uprates to Mallard Terminal (Breaker 5T9)			
ML replace CT a Mallard with new 1200/5 CT	1	$ 11,000	$ 11,000
ML replace disconnect switches A & B (min 1000 amps)	2	$ 18,000	$ 36,000
ML replace bus sections to 5T9 & switch 5T15 (1000 amps)	1	$ 75,000	$ 75,000
Uprates to Line			
Structure replace for clearance violations	30	$ 5,000	$ 150,000
Total GI-0503 Conceptual Cost Estimate			$ 1,600,000

LEGAL NOTICE

This document, prepared by ABB Inc., is an account of work sponsored by Western Area Power Administration (WAPA). Neither ABB Inc., nor any person or persons acting on behalf of either party: (i) makes any warranty or representation, expressed or implied, with respect to the use of any information contained in this report, or that the use of any information, apparatus, method, or process disclosed in this report may not infringe privately owned rights, or (ii) assumes any liabilities with respect to the use of or for damages resulting from the use of any information, apparatus, method, or process disclosed in this document.

Table of Contents

1. INTRODUCTION 1
2. STUDY METHODOLOGY AND ASSUMPTIONS 2
   2.1 Stability Analysis 2
   2.2 Steady-State Analysis 2
   2.3 Constrained Interface Analysis 4
   2.4 Short-Circuit Analysis 4
   2.5 Modeling of Proposed Wind Farm 4
3. STABILITY ANALYSIS 5
   3.1 Model Development 5
   3.2 Baseline Performance (i.e., Without the GI-0503 Wind Farm) 6
   3.3 Performance with GI-0503 Wind Farm (100 MW) 7
   3.4 Sensitivity Analysis with GI-0503 Modeled at 125 MW 8
   3.5 NMZ Sensitivity 8
   3.6 Sensitivity Analysis with Big Stone II Included 9
   3.7 Conclusions 11
4. STEADY-STATE ANALYSIS 21
   4.1 Model Development 21
   4.2 System Intact Analysis 22
   4.3 Contingency Analysis 22
   4.4 Sensitivity Analysis with GI-0503 Modeled at 125 MW 25
   4.5 Sensitivity Analysis with B10T @ 165 MW North 26
   4.6 Out-Year Sensitivity Analysis 28
   4.7 Sensitivity Analysis With Williston – Tioga 230 kV Line Added 31
   4.8 Conclusions 32

Table 4.14 60

Table 4.15 61

5. CONSTRAINED INTERFACE ANALYSIS 62
6. SHORT CIRCUIT ANALYSIS 66
   6.1 Base Case Development 66
   6.2 Short-Circuit Calculations 66
7. CONCLUSIONS 68
8. REFERENCES 71

APPENDIX A – STABILITY ANALYSIS RESULTS – ORIGINAL CASES 72

APPENDIX B – STEADY-STATE ANALYSIS – CASE SUMMARIES 116

APPENDIX C – DATA FILES FOR STEADY-STATE ANALYSIS 133

APPENDIX D – POWER FLOW & STABILITY DATA FOR GI-0503 UNIT 175

APPENDIX E – CONSTRAINED INTERFACE ANALYSIS 180

APPENDIX F – NEAR-TERM STEADY-STATE ANALYSIS RESULTS WITH B10T AT 165 MW NORTH 185

1. INTRODUCTION

Western Area Power Administration (WAPA) commissioned ABB Inc., to perform a System Impact Study for the interconnection of Project # GI-0503, a 100MW Wind Farm project to be located in Ward County, ND. The proposed wind farm (also known as Minot Wind Farm) has requested interconnection on the Max-Mallard 115 kV line at a distance of approximately 10 miles north of Max (for study purposes, it is assumed that there will be a three-breaker ring bus at the point of interconnection). The proposed in-service date is October 1, 2009.

This system impact study includes system performance evaluation based on stability, steady-state, and short-circuit analyses. WAPA has indicated that the scope of the system impact studies is limited to identifying and resolving possible criteria violations that may limit the ability of the generator to interconnect, and that the results of the studies do not, in any way, imply deliverability.

Section 2 describes the study methodology and criteria used for the analyses. Results of the stability and steady-state analysis are presented in Sections 3 and 4 respectively. Constrained interface analysis and short-circuit analysis results are presented in Sections 5 and 6 respectively.

2. STUDY METHODOLOGY AND ASSUMPTIONS

2.1 Stability Analysis

The purpose of the stability analysis is to determine whether the MAPP system would meet stability criteria following commissioning of the proposed GI-0503 Wind Farm. To that end, faults were simulated in Northern MAPP to assess the impact of the proposed project on transmission system stability. Preliminary solutions were identified and tested for faults that resulted in stability criteria violations.

2.2 Steady-State Analysis

The purpose of steady-state analysis is to analyze the impact of the proposed project on transmission system facilities under steady-state conditions. It involves two distinct analyses: thermal analysis and voltage analysis. Steady-state performance was examined both under system intact and N-1 contingency conditions. Full ac power flow solutions were used. The PSS/E program was used in these analyses.

2.2.1 System Intact Analysis

The incremental impact of the GI-0503 project on thermal loading of transmission facilities under system intact conditions was evaluated by comparing transmission system power flows with and without the proposed project. For this purpose, full ac power flow solutions were used.

All transmission facilities rated 110 kV and above were monitored in the WAPA, OTP, GRE, MP, XEL and MH control areas. The criterion used to flag thermal overloads is 100% of continuous facility rating (Rate A in PSS/E).

Significantly Affected Facilities (SAF) were identified based on MAPP Screening Guidelines (see reference [2]). According to these guidelines, all overloaded facilities that have a TDF (Transfer Distribution Factor) greater than 5% of the generation addition and an increase in flow greater than 1 MW (without Wind Farm vs. with Wind Farm) are flagged as significantly affected facilities.

In order to compute the % TDF on a given transmission facility, the following formula was used. The pre- and post-project MVA flows were obtained directly from PSS/E.

$$\text{TDF}(\%) = 100 \times \frac{\text{MVA Flow (with proposed project) - MVA Flow (without proposed project)}}{\text{MW injection of proposed project}}$$

Northern MAPP buses rated 110 kV and above were monitored for possible voltage violations. Voltages that were outside the values shown in Table 2.1 were flagged as violations. Those buses that have a voltage change of more than 0.01 p.u. (without Wind Farm vs. with Wind Farm) are included in the SAF list.

2.2.2 Contingency Analysis

Contingency analyses include single branch and selected multi-element contingencies on facilities rated 110 kV and above. Single branch as well as multi-terminal outages in WAPA, and single branch contingencies in GRE, MH, MP, OTP, and XEL were considered. Select multi-terminal outages were also considered in Northern MN. All facilities rated 110 kV and above were monitored in the WAPA, OTP, GRE, MP, XEL and MH control areas.

Contingencies were solved using activity ACCC of PSS/E. Phase shifters and transformer taps were enabled. Non-convergent contingencies from these analyses (primarily due to switching back and forth of transformer taps and switched shunts) were solved manually and their violations were appended to the ACCC results.

Thermal violations were flagged based on continuous facility rating (Rate A in PSS/E). Post-contingency power flows in excess of 90% of Rate A were recorded. Facility loadings with and without the GI-0503 Wind Farm were tabulated and compared. The criteria used to flag thermal overloads is 100% of Rate A. Significantly Affected Facilities (SAF) were identified based on the MAPP Screening Guidelines [2]. According to these guidelines, all overloaded facilities that have a TDF (Transfer Distribution Factor) greater than 3% of the generation addition and an increase in flow greater than 1 MW (without Wind Farm vs. with Wind Farm) are flagged as significantly affected facilities.

If several contingencies overload a given transmission facility, only the worst fifteen contingencies are reported. Overloads on generator step up transformers are not reported.

As in the system intact analysis, Northern MAPP buses rated 110 kV and above were monitored for possible post-contingency voltage violations. Voltages that were outside the values shown in Table 2.1 were flagged as violations. Those buses that have a voltage change of more than 0.01 p.u. (without Wind Farm vs. with Wind Farm) are included in the SAF list.

Table 2.1: Voltage Criteria for Steady-State Analysis

System	Base kV	System Intact Conditions		N-1 Contingency Conditions	
		Max (pu)	Min (pu)	Max (pu)	Min (pu)
Northern MAPP	110-500 kV	1.05	0.95	1.10	0.90
MP (Area 608)	110-500 kV	1.05	1.00	1.05	0.95
MP Western Division (Area 610)	115-230 kV	1.05	0.96	1.05	0.92
OTP (Area 626)	230-345 kV	1.05	0.97	1.10	0.92
	110-115 kV	1.07	0.97	1.10	0.92

The corresponding .sub, .mon, and .con files utilized in these analyses are attached in Appendix C.

2.3 Constrained Interface Analysis

The purpose of the constrained interface analysis is to calculate the impact of the proposed project on specified interfaces in the MAPP transmission system. The MAPP DFCALC constrained interface analysis program was used for this purpose.

2.4 Short-Circuit Analysis

The purpose of the short-circuit analysis is to identify breakers in the transmission system that will not be able to handle the increased fault current due to the addition of the proposed GI-0503 project. Three-phase and single-line-to-ground faults were simulated and the impact of the proposed project the fault currents was determined.

2.5 Modeling of Proposed Wind Farm

Power flow and stability data for modeling the proposed wind farm was provided by Basin Electric Power Cooperative. Based on the available information, the proposed wind farm will comprise GE 1.5 MW wind turbine-generators based on doubly-fed induction generator (DFIG) technology.

For study purposes, the wind farm is modeled as shown in Figure 2.1. Such a model is typical for bulk power system studies and consists of a single equivalent wind turbine-generator behind a lumped generator step-up transformer (GSU). The substation transformer is also modeled. Collector system impedances were not modeled, as this information was not available at the time of conducting the studies. The generator is assumed to regulate the voltage at the 115 kV collector bus (see Figure 2.1) to a value of 1.03 pu.

The power flow and stability data for the proposed wind farm is shown in Appendix D.

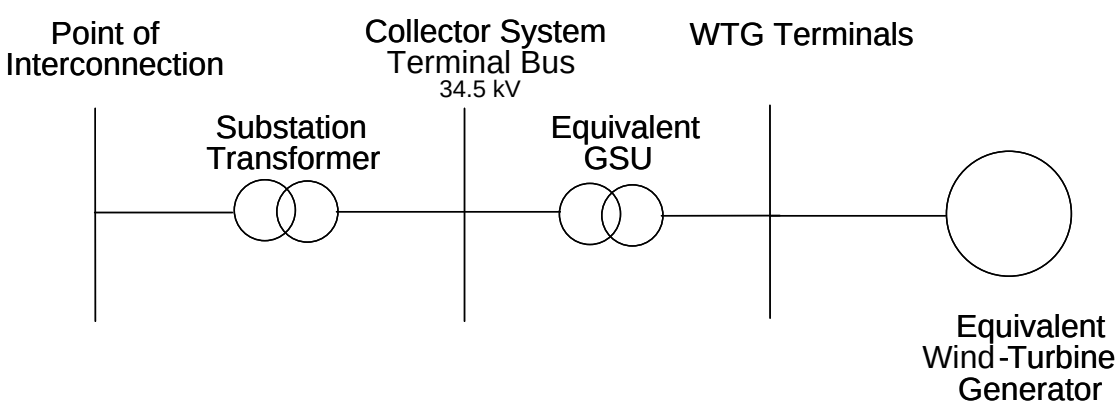

Figure 2.1: Wind Farm Model

3. STABILITY ANALYSIS

3.1 Model Development

The pre-project model for this analysis was developed starting from the models used in the MISO North Dakota Group Study (NORDAGS). The NORDAGS study models were derived from the NMORWG 2006 study package. This package utilizes PTI PSS/E™ Rev 29.4 and Version 6.6B of the Digital FORTRAN Compiler.

The starting point for the development of the pre-project model (i.e., without the proposed GI-0503 Wind Farm) was case *c5f-so15aa.sav* included in the NORDAGS package. This is a Pre-NORDAGS 2015 summer off-peak base case with Northern MAPP load (i.e., North Dakota, Manitoba Hydro and NSP load) at 70% of the corresponding summer peak load. The case includes the following:

- North Dakota Coal Fields generation at URGE
- Arrowhead-Gardner Park 345 (AHD-GPK) in-service
- Series compensation modeled on the LGS-Wilmarth 345 kV line
- SW MN Wind at ~ 825 MW along with associated transmission upgrades
- No CAPX 2020 projects are modeled in the case
- Several prior-queued generating projects

An initial model of GI-0503 wind farm was already included in case *c5f-so15aa.sav*. Several changes were made to this case with input from WAPA. Some of the more significant changes included the following:

- Purge the initial model of GI-0503 wind farm and associated connections
- Turn off project G132 (prior-queued wind farm on Ellendale-Wishek 230 kV line – recent studies have shown that this project improves Northern MAPP stability performance)
- Turn off project GI-0508 (this project is queued after GI-0503)
- Purge the second 345 kV line from White (#66537) to Brooking (#60501)
- Purge Big Stone II (#66666) and associated reinforcements (this project is excluded in the initial analysis as its in-service date is in the 2011-2012 timeframe). A sensitivity analysis was performed later with Big Stone II included. See Section 3.6.

Table 3.1 shows a list of the prior-queued projects included in the pre-project stability model.

Export levels in the pre-project case were set to the following levels using the *setexports* program included in the NMORWG Study Package. MHEX was set to 2175 MW. MWSI was loaded to its existing 1480 MW limit with Arrowhead-Gardner Park 345 kV open and then Arrowhead-Gardner Park was closed. NDEX was set to 2080 MW.

The pre-project case is named *b00-so09aa.sav.* A case summary is given in Appendix A.

After establishing the pre-project case, the proposed GI-0503 Wind Farm was added in order to create the post-project stability case (*b01-so09aa.sav*).

It is important to note that in both cases, NDEX levels are on the order of 2080 MW. In other words, the output of the GI-0503 Wind Farm was assumed consumed within NDEX boundaries. This was accomplished by increasing North Dakota loads from 61.9% of 2009 Summer Peak load levels in the pre-project case to 65.0% in the post-project case. The MHEX and MWSI levels were set as described above.

The case titles for the pre- and post-project cases are presented below. Please refer to Appendices A.1 and A.2 for more detailed case summaries.

Pre-project stability case (i.e., without GI-0503):

```
B00-SO09AA.SAV;SUMMER;OP LD;SYSTEM INTACT           :
ND=2080,MH=2175,MW=1249,OHMH=-195,OHMP=150,EWTW=99,BD=164
```

Post-project stability case (i.e., with GI-0503 at 100 MW):

```
B01-SO09AA.SAV;SUMMER;OP LD;SYSTEM INTACT           :
ND=2080,MH=2175,MW=1249,OHMH=-195,OHMP=150,EWTW=99,BD=164
```

Corresponding North Dakota one-line diagrams without and with the GI-0503 Wind Farm are depicted in Figures 3.1 and 3.2 respectively.

3.2 Baseline Performance (i.e., Without the GI-0503 Wind Farm)

This section summarizes the results from simulations conducted to test Northern MAPP dynamic performance under baseline conditions (i.e., prior-to commissioning of the proposed GI-0503 Wind Farm). The analyses was conducted on case *b00-so09aa.sav (b00)* described in the previous section.

The disturbance scenarios listed in Table 3.2 were examined on the *b00* Case. The results from the studies are summarized in Appendix_A.4. The following transient voltage violations are reported in that Appendix:

- Contingency *fd1*: 69% voltages at Jamestown 345
- Contingency *fd3*: 65% voltages at Jamestown 345
- Contingency *fd4*: 67% voltages at Jamestown 345
- Contingency *nmz*: 80% voltages at Arrowhead 230

As mentioned in [1], the violations following *fd1* and *fd4* are not a concern because their *fdk* and *fdl* counterparts with tripping of Young 2 exhibit no violations.

The violation for *fd3* on the other hand is indeed a criteria violation, as was the case for simulations with 2080 NDEX reported in [1]. Fault *fd3* is a 5 cycle 3-phase fault on Square Butte-Stanton 230 kV line. The *fd3* violations are a known issue. One possible solution that has been studied by area transmission owners is to reduce the *fd3* fault clearing time from 5 cycles to 4 cycles by replacing the existing breakers at Square Butte 230 on the Stanton line with faster two-cycle breakers. Fault *fd3* was tested with the 4 cycle fault clearing time and no criteria violations were found (see fault fd9).

The violations for *nmz* are consistent with previous studies. This is a consequence of overloads on the MH-US 500 kV lines. i.e. Dorsey-Forbes 500 kV (D602F) and Forbes-Chisago 500 kV (F601C). These lines have series capacitors at Dorsey and Chisago that limit the normal rating to 1732 MVA. As shown below, the proposed wind farm has no significant impact on the 500 kV line flows:

D602F: 1826 MW (pre-project) and 1826 MW (post-project)

F601C: 1898 MW (pre-project) and 1895 MW (post-project)

Based on information provided by the Midwest Independent System Operator (MISO) in previous studies, there is presently an operating procedure that limits the flow on the F601C line to 1765 MW. Recent studies of large generation developments in Northern MAPP have shown that the *nmz* violations can be mitigated by reducing the F601C flow to this level. A sensitivity analysis was performed to confirm this. Results are shown in Section 3.5.

3.3 Performance with GI-0503 Wind Farm (100 MW)

The same contingencies that were tested in the baseline analyses (Table 3.2) were tested on case *b01-so09aa.sav* (Case *b01*) with the 100 MW GI-0503 Wind Farm in service. The results are summarized in Appendix_A.5. The following transient voltage violations are observed:

- Contingency *fd1*: 69% voltages at Jamestown 345
- Contingency *fd3*: 64% voltages at Jamestown 345
- Contingency *fd4*: 67% voltages at Jamestown 345
- Contingency *nmz*: 80% voltages at Arrowhead 230
- Contingency *yas*: 121% voltages at Arrowhead 230

Disregarding for the aforementioned reasons the *fd1* and *fd4* results, the one detrimental impact of the 100 MW GI-0503 Wind Farm is observed for contingency *fd3*, which leads to a deterioration in transient voltage violations in the Jamestown area from 65% to 64%. Fault *fd9* (4 cycle version of *fd3*) was run and no violation was detected.

Fault *yas* (SLG fault at Arrowhead 230 kV) resulted in high voltage violation at Arrowhead 345 kV bus. As suggested by Minnesota Power in a previous study, this violation is not an issue as the fault would, in reality, also disconnect the Arrowhead 345 kV bus.

The above results suggest that with the exception of fault *fd3,* there is not a significant impact of the 100 MW GI-0503 Wind Farm on regional-type contingencies.

The local impact of the proposed GI-0503 Wind Farm was simulated by running faults *ha3* and *hb3*. See Table 3.2. In both these faults, the proposed GI-0503 wind farm tripped on undervoltages but there were no criteria violations. These faults were repeated with wind farm undervoltage relays disabled (faults *ha3-nt* and *hb3-nt* in Appendix_A.5) to prevent the wind farm from tripping on undervoltages. No criteria violations were observed. Simulation results suggest there is no significant impact of the GI-0503 wind farm in the local area.

3.4 Sensitivity Analysis with GI-0503 Modeled at 125 MW

At the request of WAPA, a sensitivity analysis was performed with the output of the proposed wind farm increased to 125 MW. A post-project sensitivity case was developed with GI-0503 modeled at 125 MW (case *b02-so09aa.sav*). Figure 3.3 shows a one-line diagram. See Appendix_A.3 for a case summary.

All faults listed in Table 3.2 were tested on case *b02-so09aa.sav* (Case *b02*). Results are summarized in Appendix_A.6. In general, the results are similar to those presented in Section 3.3. It is concluded that there is no additional degradation in stability performance if wind farm output is increased to 125 MW.

3.5 NMZ Sensitivity

Previous results showed that fault *nmz* resulted in transient voltage violations both with and without the proposed GI-0503 wind farm. This disturbance involves a fault on the Chisago – Forbes 500 kV line (F601C) followed by cross-tripping of the Dorsey – Forbes 500 kV line (D602F) and Manitoba Hydro DC reduction. The Forbes SVC is retained on-line.

It was proposed that the violations following fault *nmz* are questionable considering the heavy flows on the D602F and F601C lines and the resulting overloads on the Roseau and Chisago series capacitors. In this section, a sensitivity analysis was performed to determine whether the *nmz* violations are still present with reduced 500 kV line flows. Based on information provided by MISO in previous studies, there is presently an operating procedure that limits the flow on the F601C line to 1765 MW (it is assumed that the flow is measured at Forbes). Simulations were performed to determine *nmz* fault performance with F601C line flow limited to 1765 MW.

In order to investigate *nmz* fault performance with reduced F601C flows, pre- and post-project sensitivity cases (cases bs0 and bs1 respectively) were created from

the previously developed pre- and post-project cases (cases b00 and b01 respectively). For the purposes of this analysis, selected generators in Northern MN were scaled down to achieve the F601C flow reduction. More specifically, generators at Syl Laskin (bus 61702), Tac Harbor (61693) and Silver Bay (buses 61763 and 61766) were scaled down by approximately 260 MW while scaling down the Twin Cities (Zone 01) load. These generators were selected because they have the most impact on F601C line flow (high TDF in relation to other generators).

Note: In reality, it is unlikely that only generation in Northern MN would be reduced to curtail the F601C flow. All schedules impacting the flow on this line could probably be curtailed in a similar manner to reduce the flow to within acceptable levels. Such readjustments would probably come from all over Northern MAPP including Minnesota, North Dakota, and Manitoba.

Table_3.3 summarizes the 500 kV line flows on the two original cases and two sensitivity cases. In both sensitivity cases, MHEX was set to approx. 2175 MW and NDEX was set to 2080 MW. MWSI was loaded to its existing 1480 MW limit with Arrowhead – Gardner Park open and then Arrowhead – Gardner Park was closed. The F601C line flow is 1765 MW.

Fault *nmz* was repeated on the sensitivity cases and no transient voltage violations were observed. The results from the studies are summarized in Appendix_A.7.

In summary, the results of this analysis confirm that the *nmz* violations are sensitive to the F601C line. Results show that with F601C at 1765 MW, post-project *nmz* fault performance is acceptable and meets NMORWG stability criteria.

3.6 Sensitivity Analysis with Big Stone II Included

3.6.1 Model Development

The pre-project model for this analysis was derived from case *c5f-so15aa.sav* described in Section 3.1. The modeling changes described in that Section were repeated with the exception that the Big Stone II plant was retained.

Export levels in the pre-project case were set to the following levels using the *setexports* program included in the NMORWG Study Package. MHEX was set to 2175 MW. MWSI was loaded to its existing 1480 MW limit with Arrowhead-Gardner Park 345 kV open and then Arrowhead-Gardner Park was closed. NDEX was set to 2450 MW.

The pre-project case is named *g00-so09aa.sav.* A case summary is given in Appendix A.8.

After establishing the pre-project case, the proposed Minot Wind Farm was added in order to create the post-project stability case (*g02-so09aa.sav*). For the purposes of this analysis, Minot Wind was modeled at 125 MW. Simultaneous transfers across the MHEX, MWSI and NDEX interfaces were adjusted as in the pre-project case. A case summary is given in Appendix A.9.

The case titles for the pre- and post-project cases are presented below. Please refer to Appendices A.8 and A.9 for more detailed case summaries.

Pre-project stability case (i.e., without GI-0503):

```
G00-SO09AA.SAV;SUMMER;OP LD;SYSTEM INTACT           :
ND=2449,MH=2175,MW=1250,OHMH=-197,OHMP=150,EWTW=97,BD=165
```

Post-project stability case (i.e., with GI-0503 at 125 MW):

```
G02-SO09AA.SAV;SUMMER;OP LD;SYSTEM INTACT           :
ND=2450,MH=2175,MW=1249,OHMH=-196,OHMP=150,EWTW=97,BD=165
```

Corresponding North Dakota one-line diagrams without and with the GI-0503 Wind Farm are depicted in Figure 3.4 and 3.5 respectively.

3.6.2 Simulation Results

The same contingencies that were tested in the baseline analyses (Table 3.2) were tested on case *g02-so09aa.sav* (Case *g02*) with the 125 MW GI-0503 Wind Farm in service. The results are summarized in Appendix A.11. The following transient voltage violations are observed:

- Contingency *fd3*: 66% voltages at Jamestown 345
- Contingency *fd4*: 68% voltages at Jamestown 345
- Contingency *nmz*: 79% voltages at Arrowhead 230
- Contingency *yas*: 121% voltages at Arrowhead 230

As described previously, the *fd4* and *yas* transient voltage violations are not a concern and are therefore disregarded.

Faults *fd3* and *nmz* were repeated on the pre-project case and resulted in similar violations. As before, Minot Wind has a 1% impact on the minimum transient voltages following fault *fd3*. Fault *fd9* (4 cycle version of *fd3*) was run and no violations were detected. Impact on *nmz* is insignificant.

These results suggest that with the exception of fault *fd3,* there is not a significant impact of the 125 MW GI-0503 Wind Farm on regional-type contingencies.

Local impacts were evaluated by running faults *ha3* and *hb3*. See Table 3.2. As before, results suggest there is no significant impact of the GI-0503 wind farm in the local area.

3.7 Conclusions

Based on the results of the stability analysis, the following conclusions can be drawn:

- The interconnection of the proposed GI-0503 Wind Farm would not adversely impact local stability performance.

- For regional contingencies, transient voltage violations were observed at Jamestown 345 following fault *fd3* both without and with the proposed wind farm. The impact of the proposed wind farm on the minimum transient voltages at Jamestown is 1% (i.e., there is a 1% degradation in the transient voltages). The pre-project *fd3* violations are a known issue. One possible solution that has been proposed by area transmission owners is to reduce the *fd3* fault clearing time from 5 cycles to 4 cycles by replacing the existing breakers at Square Butte 230 on the Stanton line with faster two-cycle breakers. Fault *fd3* was tested with the 4 cycle fault clearing time and no pre- and post-project criteria violations were found. Provided the *fd3* violations are resolved, no other adverse impacts are noted.

- Transient voltage violations resulted by fault *nmz* are sensitive to the F601C line. With F601C at 1765 MW, post-project *nmz* fault performance is acceptable and meets NMORWG stability criteria. As documented above, the proposed wind farm has no signficant impact on the F601C steady state line flow.

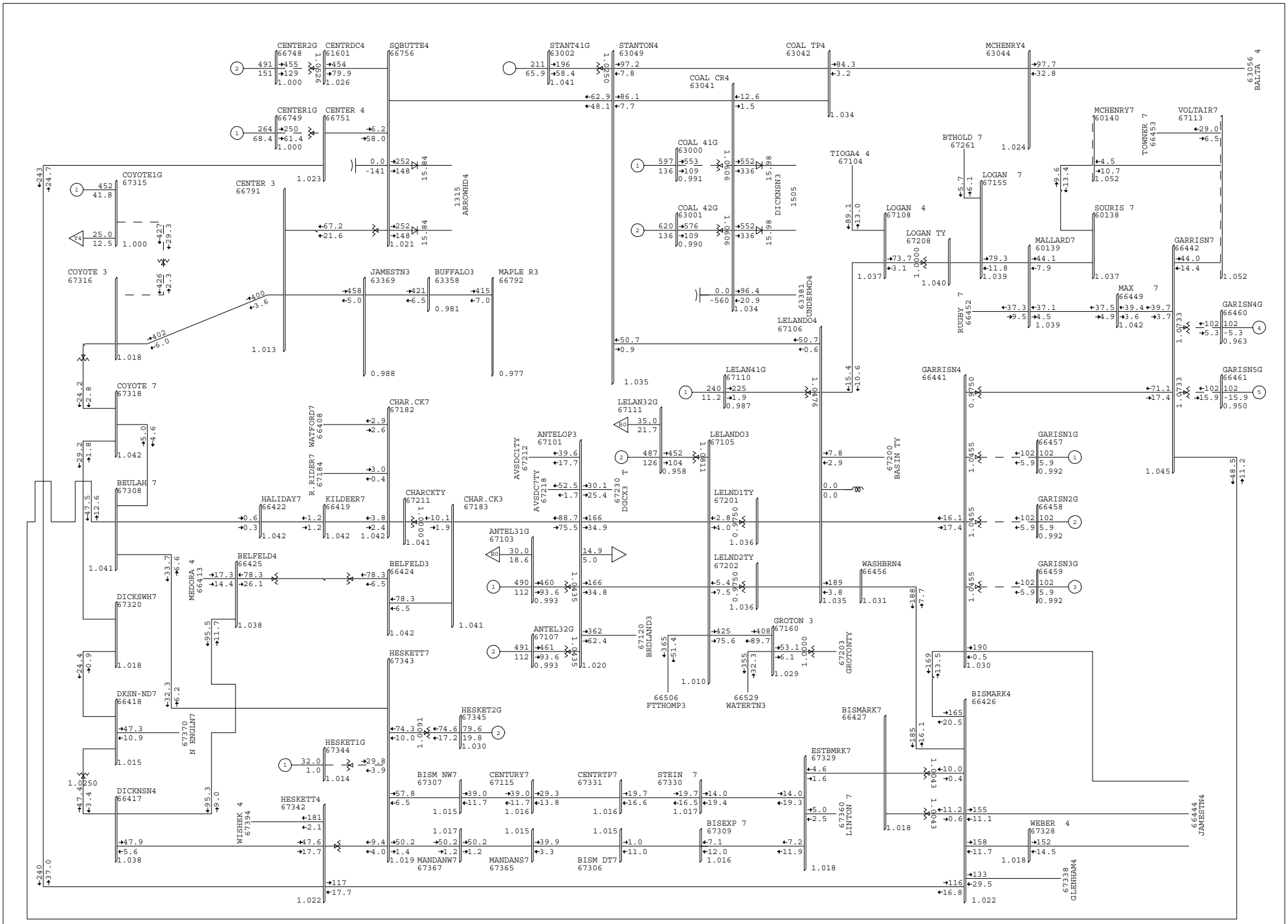

B00-SO09AA.SAV;SUMMER;OP LD;SYSTEM INTACT :
ND=2080,MH=2175,MW=1249,OHMH=-195,OHMP=150,EWTW=99,BD=164
TUE, DEC 04 2007 15:29

100% RATEA
0.950 UV 1.050 OV

BUS -VOLTAGE(PU)
BRANCH -MW/MVAR
EQUIPMENT -MW/MVAR

Figure 3.1: North Dakota - Without GI-0503 - 2080 MW NDEX (Case b00)

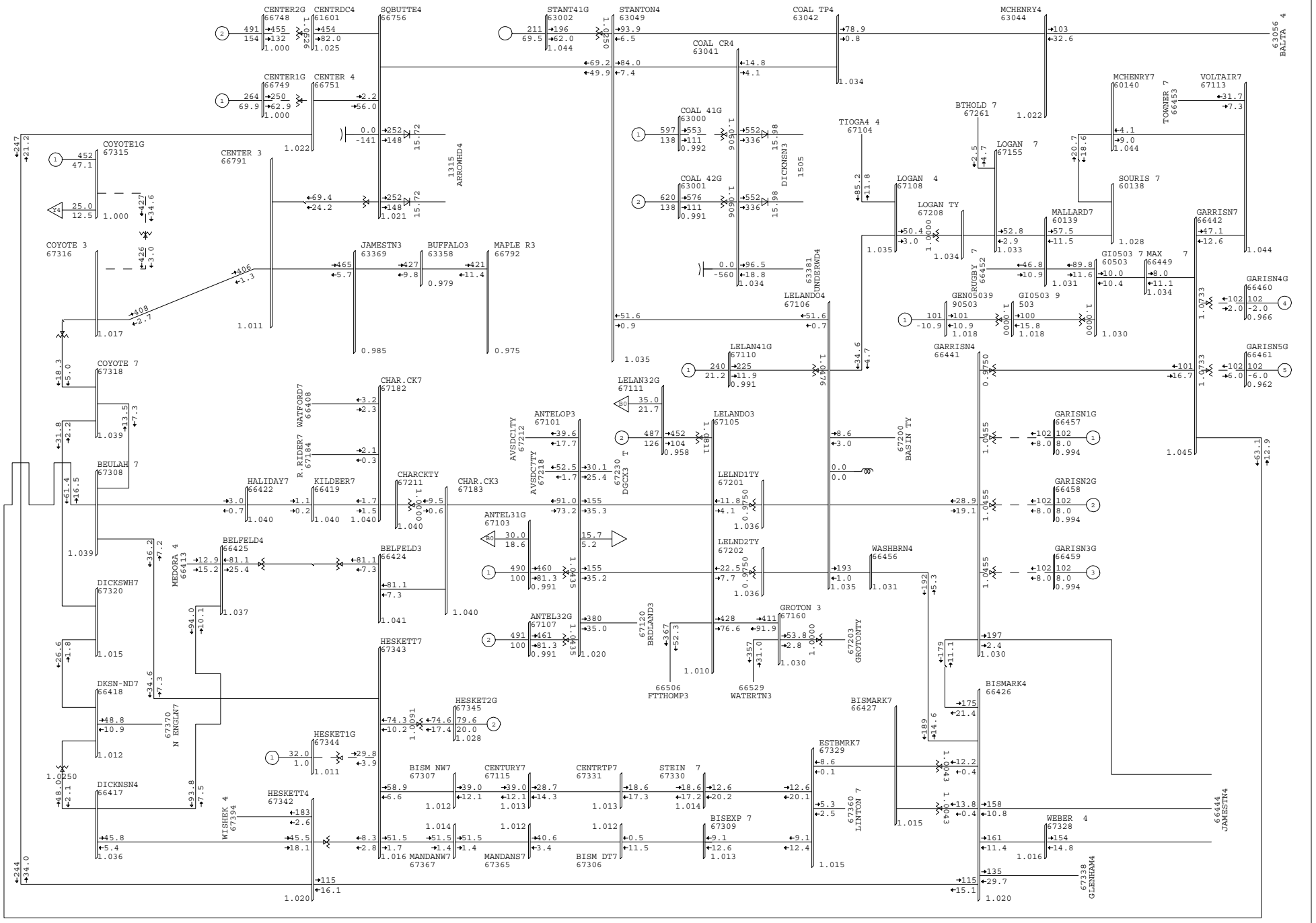

B01-SO09AA.SAV;SUMMER;OP LD;SYSTEM INTACT :
ND=2080,MH=2175,MW=1249,OHMH=-195,OHMP=150,EWTW=99,BD=164
TUE, DEC 04 2007 15:33

100% RATEA
0.950 UV 1.050 OV

BUS -VOLTAGE(PU)
BRANCH -MW/MVAR
EQUIPMENT -MW/MVAR

Figure 3.2: North Dakota - With 100 MW GI-0503 - 2080 MW NDEX (Case b01)

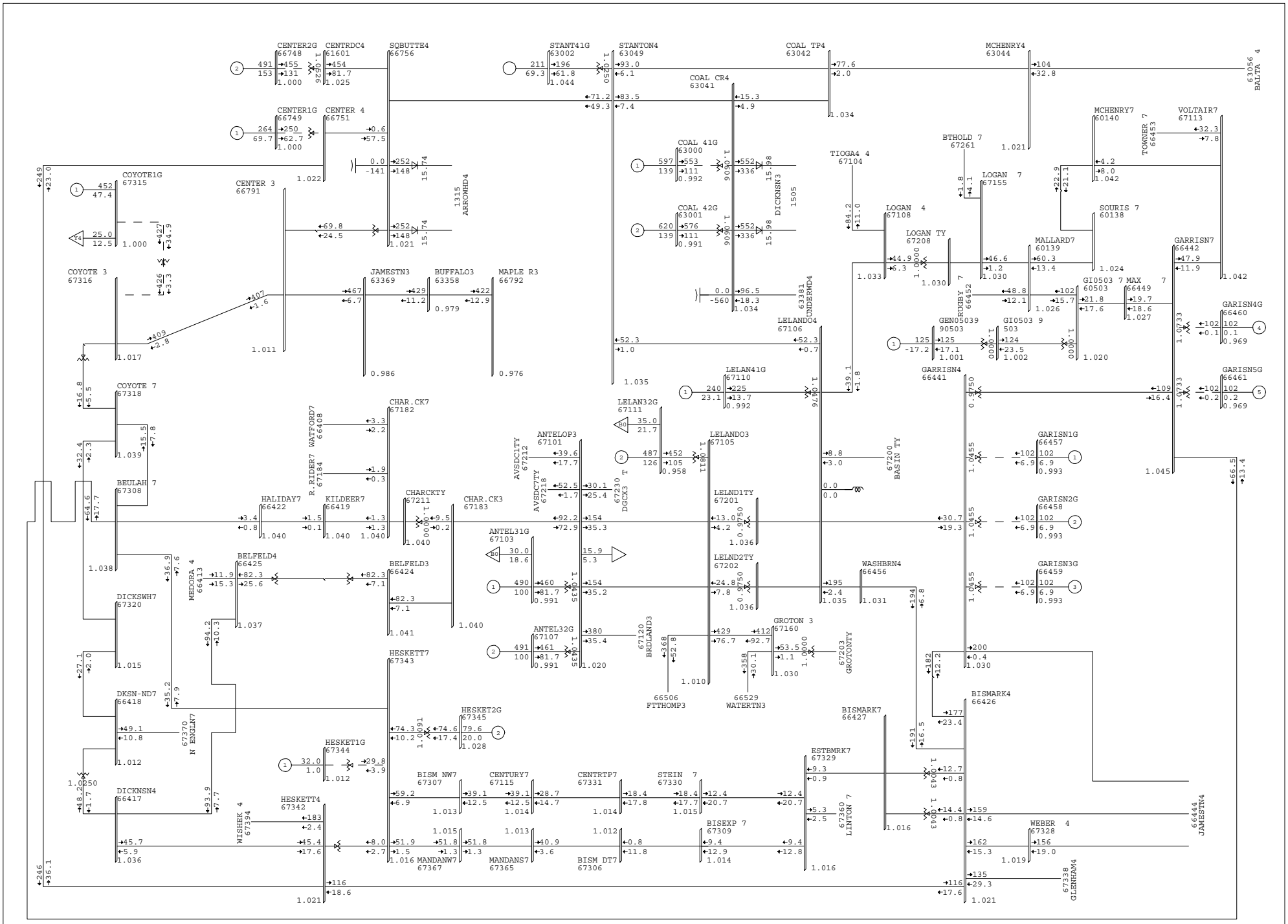

B02-SO09AA.SAV;SUMMER;OP LD;SYSTEM INTACT :
ND=2080,MH=2175,MW=1249,OHMH=-195,OHMP=150,EWTW=99,BD=164
TUE, DEC 04 2007 15:37

100% RATEA
0.950 UV 1.050 OV

BUS -VOLTAGE(PU)
BRANCH -MW/MVAR
EQUIPMENT -MW/MVAR

Figure 3.3: North Dakota - With 125 MW GI-0503 - 2080 MW NDEX (Case b02)

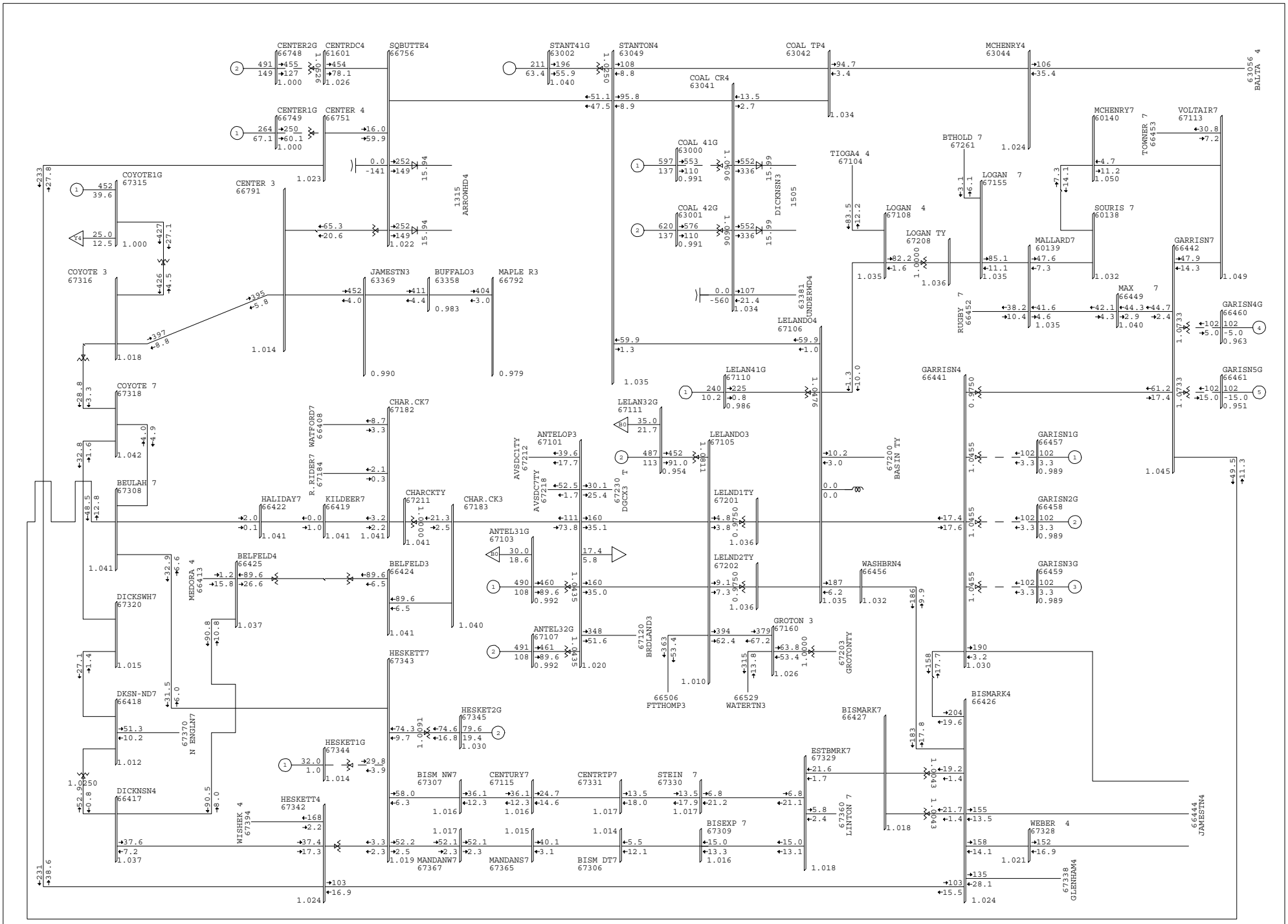

G00-SO09AA.SAV;SUMMER;OP LD;SYSTEM INTACT :
ND=2449,MH=2175,MW=1250,OHMH=-197,OHMP=150,EWTW=97,BD=165
WED, MAR 19 2008 14:46

100% RATEA
0.950 UV 1.050 OV

BUS -VOLTAGE(PU)
BRANCH -MW/MVAR
EQUIPMENT -MW/MVAR

Figure 3.4: North Dakota - Without GI-0503 - 2450 MW NDEX (Case g00)

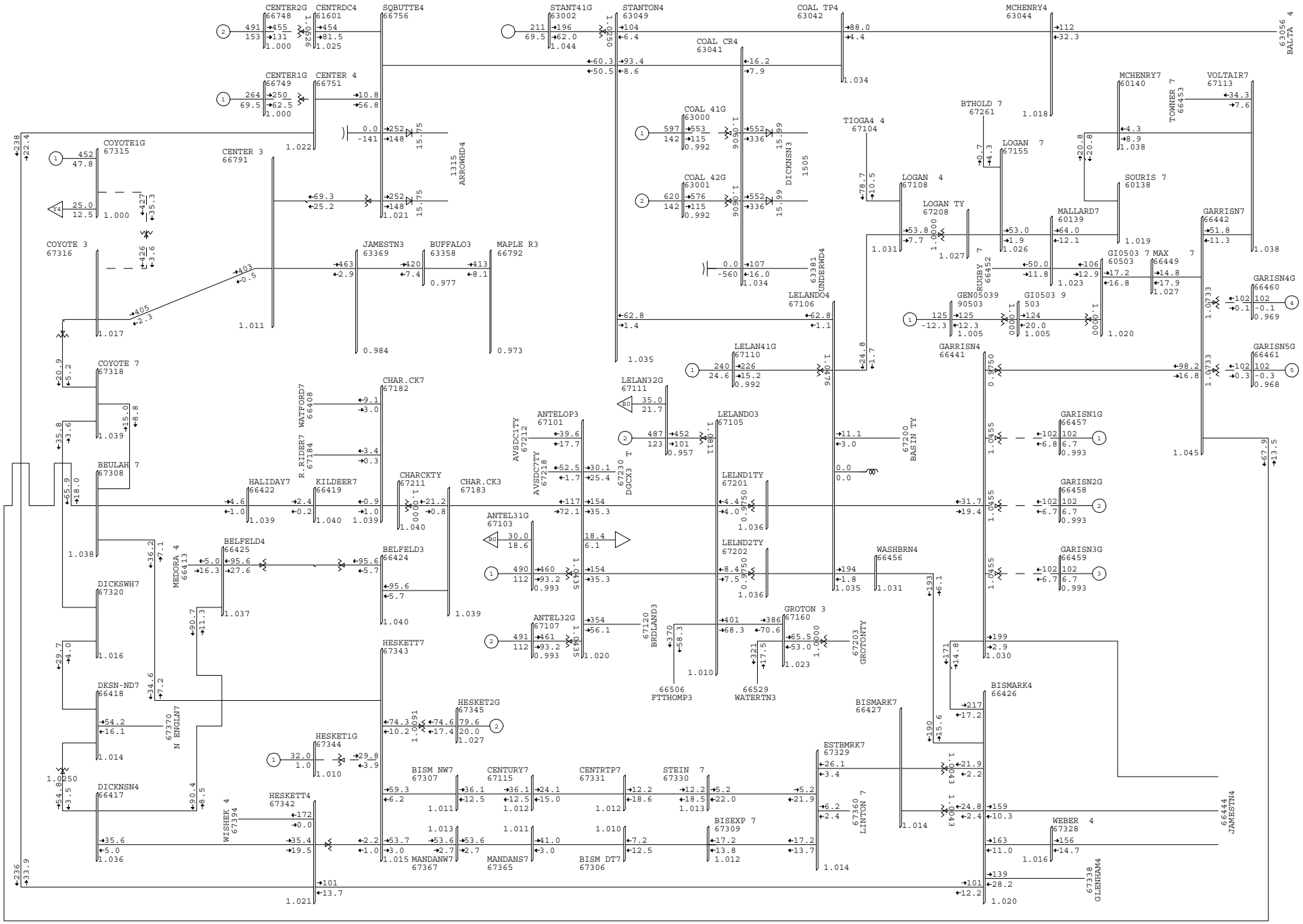

Figure 3.5: North Dakota - With 125 MW GI-0503 - 2450 MW NDEX (Case g02)

Table 3.1: Prior-Queued Projects Modeled in the Pre-Project Stability Case (Case b00-so09aa.sav)

Project	Name	Prime Mover	Net MW	Status (ON/OFF)
GI-0101a	RCDC	-	200	OFF
GI-0208	Edgeley (BEPC)	Wind	40	OFF
GI-0209	Ft. Thompson	Wind	40	ON
GI-0316	Groton CT	Gas	120	OFF
G256	Glendive #2	Gas	45	OFF
G291	Edgeley	Wind	19	OFF
G248	Dickey	Wind	19	OFF (Suspended)
G370	Anson #4	Gas	205	ON
G359	Dickey	Wind	150	OFF
G438	Marshall	Wind	19.5	OFF
G408	McHenry	Wind	12	OFF
G132	Ellendale	Wind	180	OFF
G297	Glenham	Wind	39	OFF
G380	Rugby	Wind	150	OFF
TI-0301	Brookings Co. - White Interconnection	-	-	ON
G255	Yankee	Wind	200	ON
G311	Gascoyne	Wind	19	OFF
GI-0108	White	Wind	200	ON
G392	Big Stone 2	Coal	600	OFF
GI-0217	Belfield	Coal	500	OFF (Withdrawn)
GI-0402	Big Stone / Grant	Coal	200	OFF
GI-0403	Big Stone / Grant	Coal	75	OFF
GI-0303	Brookings (White 115)	Wind	170	OFF
GI-0321	Leland Olds 3	Coal	500	OFF
GI-0503	Minot	Wind	100	OFF

Table 3.2: List of Contingencies Studied

Code	Description	System
	Regional Faults	
ac3	4 cycle 3 phase fault at antelope valley 345 clear the antelope valley-broadland 345 kv line	N. Dakota
ad3	4 cycle 3 phase fault at antelope valley 345 clear the antelope valley-charlie creek 345 kv line	N. Dakota
ag1	Single line to ground fault with breaker fail at Leland Olds on the Ft. Thompson 345 kV line	N. Dakota
ag3	Three phase fault at Leland Olds on the Ft. Thompson 345 kV line.	N. Dakota
bl3	5 cycle 3 phase fault at stanton 230 clear the stanton-leland olds 230 kv line	N. Dakota
eb3	4.5 cy 3 ph flt @ center 345 on jamestown line clr center-jamestown 345 kv line	N. Dakota
ec3	5 cy 3 ph flt @ center 230 on heskett line clr center-heskett 230 kv line	N. Dakota
ef3	5 cycle 3 phase fault at stanton 230 clear the stanton-coal creek-mchenry 230 kv line	N. Dakota
el3	5 cy 3 ph flt @ center 230 on square butte line clr center-square butte 230 kv line	N. Dakota
ei2	Permanent bipole fault on the CUDC line. Both Coal Creek units tripped at 0.28 sec.	N. Dakota
eq1	4.5 cy slgf @ coal creek on pole 1, brkr 61rb1 stk clr @ 11 cy by tripping fltd pole & bus 1,cross trip ccs 2	N. Dakota
ev0	4 cycle 3 phase fault at sqbt230p1 clr tripping sbdc p1, ramp sbdc p2 > 1100 amps @ 17 cy	N. Dakota
fd1	5 cycle slgf @ Square Butte-Stanton, breaker 18 stuck, Square Butte dc bipole blocked @ 1 cycle. Clear @ 11 cycles by tripping Square Butte-Stanton, ramp Square Butte dc pole 1 > 275 @ 17 cycles.	N. Dakota
fdk	Same as fd1 but with addition of Young 2 unit trip @ 11 cycles	N. Dakota
fd3	5 cycle 3 phase fault @ Square Butte 230 on Stanton line. Clear Square Butte-Stanton 230 kV line.	N. Dakota
fd4	5 cycle slgf @ Square Butte-Stanton, breaker 17 stuck, Square Butte dc bipole blocked @ 1 cycle. Clear @ 12 cycles by tripping Square Butte-Stanton, ramp Square Butte dc back @ 17 cycles.	N. Dakota
fdl	Same as fd4 but with addition of Young 2 unit trip @ 12 cycles	N. Dakota
nbz	Three-phase fault at Chisago on Chisago County-Forbes 500 kV line. Trip F601C, transfer trip D602F. 100% reduction initiated from Chisago. Forbes SVC trips.	500 kV
nmz	Three-phase fault at Chisago on Chisago County-Forbes 500 kV line. Trip F601C, transfer trip D602F. 100% reduction initiated from Chisago. Leave Forbes SVC on MP System following disturbance.	500 kV
pcs	Single line to ground fault with breaker fail at King with 8P6 stuck.	Prony
pct	Eau-Claire - Arpin 345 kV line trip without a fault.	Prony
pys	Single line to ground fault with breaker fail at Prairie Island with 8H9 stuck.	Prony
pyt	Prairie Island-Byron 345 kV line trip without a fault.	Prony
ya3	4 cycle 3 phase fault at Arrowhead 345 kV clear the Arrowhead - Gardner park 345 kv line	North Minn.
yas	4 CY SLG fault at Arrowhead 230 on AHD-GDP ckt #1 AHD brkr stk, clear at 17 cycles by tripping AHD-GDP bus section	North Minn.
	Local Faults	
ha3	6 cycle 3 phase fault at Minot Wind 115 kV Ring Bus Clear the Minot Wind-Max 115 kv line	N. Dakota
hb3	6 cycle 3 phase fault at Minot Wind 115 kV Ring Bus Clear the Minot Wind-Mallard 115 kv line	N. Dakota

Table 3.3: NMZ Sensitivity Cases - 500 kV Line Flows

Case	Description	NDEX	ND Load Level		D602F	F601C	Chisago Series Caps		Dorsey Sync. Condenser		
		MW	MW	%	MW	MW	MVA	% of Rate A	Total MVAr	Total QMAX	Margin
b00	Pre-project case with F601C line flow at 1895 MW	2080.0	1811.2	61.9	1826.0	1898.0	1835.4	106.0	1363.0	1560.0	197.0
bs0	Case b00 with F601C line flow reduced to 1765 MW	2080.0	1814.8	62.0	1839.0	1765.0	1712.4	98.9	1334.0	1560.0	226.0
b01	Post-project case with F601C line flow at 1895 MW	2080.0	1901.7	65.0	1826.0	1895.0	1833.3	105.8	1362.0	1560.0	198.0
bs1	Case b01 with F601C line flow reduced to 1765 MW	2080.0	1902.8	65.1	1839.0	1765.0	1712.1	98.9	1333.0	1560.0	227.0

Table 3.4: Prior-Queued Projects Modeled in the Pre-Project Stability Case (Sensitivity Case g00-so09aa.sav)

Project	Name	Prime Mover	Net MW	Status (ON/OFF)
GI-0101a	RCDC	-	200	OFF
GI-0208	Edgeley (BEPC)	Wind	40	OFF
GI-0209	Ft. Thompson	Wind	40	ON
GI-0316	Groton CT	Gas	120	OFF
G256	Glendive #2	Gas	45	OFF
G291	Edgeley	Wind	19	OFF
G248	Dickey	Wind	19	OFF (Suspended)
G370	Anson #4	Gas	205	ON
G359	Dickey	Wind	150	OFF
G438	Marshall	Wind	19.5	OFF
G408	McHenry	Wind	12	OFF
G132	Ellendale	Wind	180	OFF
G297	Glenham	Wind	39	OFF
G380	Rugby	Wind	150	OFF
TI-0301	Brookings Co. - White Interconnection	-	-	ON
G255	Yankee	Wind	200	ON
G311	Gascoyne	Wind	19	OFF
GI-0108	White	Wind	200	ON
G392	Big Stone 2	Coal	600	ON
GI-0217	Belfield	Coal	500	OFF (Withdrawn)
GI-0402	Big Stone / Grant	Coal	200	OFF
GI-0403	Big Stone / Grant	Coal	75	OFF
GI-0303	Brookings (White 115)	Wind	170	ON
GI-0321	Leland Olds 3	Coal	500	OFF
GI-0503	Minot	Wind	100	OFF

4. STEADY-STATE ANALYSIS

4.1 Model Development

The starting point for the development of the pre-project model (i.e., without the proposed GI-0503 Wind Farm) was case *p1e-sp15aa.sav* from the recently completed GI-0217 System Impact Study. See reference [3]. This is a MAPP 2006 Series 2011 Post-Belfield Summer Peak case with the proposed GI-0217 plant in service. In order to develop the pre-project case, several changes were made to this case with input from the study ad hoc group. Some of the more significant changes included the following:

- Purge GI-0217 plant and associated reinforcements (this project has withdrawn from the queue)
- Purge the second 345 kV line from White (#66537) to Brooking (#60501).
- Scale MH, ND and TC loads down to 2009 summer peak levels based on *peakload.data* file.
- Model load growth in Western ND for 2009 summer peak.
- Add capacitor banks scheduled for Little Missouri and Dawson County.
- Model miscellaneous rating changes.
- Add the following prior-queued generation projects and dispatched them to the MISO footprint east of the Twin Cities:
    - G256 (45 MW gas turbine at Glendive 115 kV)
    - G291 (19 MW wind farm at Edgeley 41.6 kV)
    - G248 (19 MW wind farm at Ellendale 115 kV)
    - G359 (150 MW wind farm at Ellendale 230 kV)
    - G438 (19.5 MW wind farm at Brownsville 41.6 kV)
    - G408 (12 MW wind farm at Velva Tap 115 kV)
    - G132 (180 MW wind farm on Ellendale-Wishek 230 kV line)
    - G297 (39 MW wind farm on Bowdle - Glenham 115 kV line)
    - G380 (150 MW wind farm at Rugby 230 kV)
    - G311 (19 MW wind farm at Gascoyne 115 kV)
    - GI-0303 (170 MW wind farm at White 115 kV)

Table 4.1 shows a list of the prior-queued projects included in the pre-project steady-state model.

As in the summer off-peak cases, the Arrowhead-Gardner Park 345 kV line is included in the peak model. Also, no CAPX 2020 projects are modeled in the case.

The resulting pre-project summer peak case is named *e00-sp09aa.sav*. The North Dakota load is at 108.7% of the 2009 peak load level of 2925 MW. (Note: The load level is 108.7% because of the load growth in Western ND; it is assumed that the projected peak load of 2925 MW did not factor in the load growth).

After establishing the pre-project case, the proposed GI-0503 Wind Farm was added with an output of 100 MW in order to create the post-project summer peak case *e01-sp09aa.sav*. For the purposes of this study, the GI-0503 Wind Farm was dispatched by scaling up load in MAIN.

Detailed case summaries are given in Appendix B. Corresponding North Dakota Coalfields one-line diagrams without and with the GI-0503 Wind Farm are depicted in Figures 4.1 and 4.2 respectively.

The impact of the GI-0503 Wind Farm was studied both under system intact and N-1 contingency conditions. Full ac power flow solutions were used. Results are described in the following sections.

4.2 System Intact Analysis

The incremental impact of the GI-0503 Wind Farm on thermal loading of transmission facilities under system intact conditions was evaluated by comparing transmission system power flows with and without the GI-0503 project.

All transmission facilities rated 110 kV and above were monitored in the WAPA, OTP, GRE, MP, XEL and MH control areas. The criterion used to flag thermal overloads is 100% of continuous facility rating (Rate A in PSS/E). All overloaded facilities that have a TDF (Transfer Distribution Factor) greater than 5% of the generation addition and an increase in flow greater than 1 MW (without wind farm vs. with wind farm) are flagged as significantly affected facilities (SAF).

Northern MAPP buses rated 110 kV and above were monitored for possible voltage violations. Voltages that were outside the values shown in Table 2.1 were flagged as violations. Those buses that have a voltage change of more than 0.01 p.u. (without Wind Farm vs. with Wind Farm) are included in the SAF list.

Significantly affected facility loadings are presented in Table 4.2. Newly overloaded facilities (if any) are marked in red. The Table 4.2 results show that following the interconnection of the proposed wind farm, the 230 kV line between Ellendale the G132 wind farm is significantly affected. Without GI-0503 Wind Farm, the loading on this facility is 130.3% based on the 239 MVA normal rating. With GI-0503, the loading on this facility is 132.6% based on the normal rating.

The incremental impact of the proposed GI-0503 project on bus voltages is insignificant.

4.3 Contingency Analysis

Contingency analyses include single branch and selected multi-element contingencies on facilities rated 110 kV and above. Single branch as well as multi-terminal outages in WAPA, and single branch contingencies in GRE, MH,

MP, OTP, and XEL were considered. Select multi-terminal outages were also considered in Northern MN. All facilities rated 110 kV and above were monitored in the WAPA, OTP, GRE, MP, XEL and MH control areas.

Contingencies were solved using activity ACCC of PSS/E. Phase shifters and transformer taps were enabled. Non-convergent contingencies from these analyses (primarily due to switching back and forth of transformer taps and switched shunts) were solved manually and their violations were appended to the ACCC results.

Thermal violations were flagged based on continuous facility rating (Rate A in PSS/E). Post-contingency power flows in excess of 90% of the Rate A were recorded. Facility loadings with and without the GI-0503 Wind Farm were tabulated and compared. The criteria used to flag thermal overloads is 100% of Rate A. Significantly Affected Facilities (SAF) were identified based on the following criteria: All overloaded facilities that have a TDF (Transfer Distribution Factor) greater than 3% of the generation addition and an increase in flow greater than 1 MW (without Wind Farm vs. with Wind Farm) are flagged as significantly affected facilities.

If several contingencies overload a given transmission facility, only the worst fifteen contingencies are reported. Overloads on generator step up transformers are not reported.

As in the system intact analysis, Northern MAPP buses rated 110 kV and above were monitored for possible post-contingency voltage violations. Voltages that were outside the values shown in Table 2.1 were flagged as violations. Those buses that have a voltage change of more than 0.01 p.u. (without Wind Farm vs. with Wind Farm) are included in the SAF list.

The following contingencies failed to converge, both with and without the proposed wind farm. Since these contingencies are remote from the study area, no attempt was made to solve them.

- Loss of 115/41.6 kV Transformer at Jamestown Peaker Substation (OTP): There are two peaking units at this 41.6 kV substation (bus 63172). The total output is approx. 40 MW. Following the loss of the 115/41.6 kV transformer, the only available transmission outlet is the Jamestown-Edgeley-Oakes 41.6 kV line connecting to the Oakes 41.6/230 kV substation. The 41.6 kV path is rated 24 MVA and is unable to support the full output of the peakers. Voltage collapse is a result of increased loadings on the 41.6 kV lines. This contingency may be resolved by tripping one or both peaking units.

- Loss of 115/92 kV Transformer at Bay Front (XEL): The Bay Front Generating Station is located in Northern MN (bus 60657). There are four

units at this substation and the total output is 55 MW. The loss of the 115/92 kV transformer results in the loss of a strong transmission outlet at Bay Front. This contingency may be solved by tripping one or more units at Bay Front.

- Loss of Dawson County – Miles City 230 kV Line: This contingency leads to voltage instability due to a reactive deficiency at the Miles City 230 kV substation. WAPA indicated that the Miles City DC Tie is ramped down to 60 MW following this contingency.

- Loss of Stegall 345/230 kV Transformer: This contingency leads to voltage instability due to a reactive deficiency at the Stegall 230 kV substation.

- Loss of Radisson - Kettle 138 kV Line or Kettle Generating Unit

Table 4.3 lists the significantly affected facility loadings for contingency conditions for without and with the GI-0503 Wind Farm. The table lists the limiting facilities and associated contingencies that cause overloads, along with a comparison of facility loadings expressed both in MVA and in percent on Rate A without and with the GI-0503 Wind Farm.

The Table 4.3 violations were screened to identify overloads on facilities that are in the immediate vicinity of the Max and Mallard 115 kV substations. These facilities include the following:

- Garrison 230/115 kV Transformer: A new overload was observed on this transformer following the loss of the Coyote – Center 345 kV line. This violation is not legitimate since there is a special protection scheme (SPS) associated with this contingency to trip the Coyote unit (the loading on the Coyote unit is 427 MW net). With Coyote SPS action, the overload is mitigated.

- Garrison – Beulah 115 kV Line: A new overload was observed on this line following the contingency '105 1'. With GI-0503 modeled, the loading on this line under contingency condition is 126.2 MW which is 100.6% of Rate A (120 MVA). The loading is well within the emergency rating (Rate C = 132 MVA) and is not considered an issue.

- Coyote – Dickinson 115 kV and Beulah – Heskett 115 kV Lines: Loss of Coyote – Center 345 kV line caused overloads on these elements with and without proposed GI-0503 Wind Farm. With Coyote SPS action, the loadings of these elements were reduced to acceptable level.

It is also important to note that the proposed GI-0503 Wind Farm also aggravated the flows on several other transmission facilities that are remote from the point of interconnection. See Table 4.3. These overloads have not been addressed in this

study. It is assumed that mitigation of these overloads outside of the scope of the present ER interconnection studies. Additional analysis will be required to determine if mitigation is required to resolve these overloads.

Analysis of post-contingency voltages showed voltage violations at several remote buses, both with and without the proposed project. Table 4.4 lists the significantly affected bus voltages. The table lists only those buses that are adversely impacted by the addition of the proposed project. These buses are remote from the study area and are not addressed in this study.

In Sections 4.4 through 4.6, several sensitivities are performed. In all these sensitivities, the Minot Wind Farm is modeled at 125 MW in the post-project cases.

4.4 Sensitivity Analysis with GI-0503 Modeled at 125 MW

At the request of WAPA, a sensitivity analysis was performed with the output of the proposed wind farm increased to 125 MW. A post-project sensitivity case was developed with GI-0503 modeled at 125 MW (case *e02-sp09aa.sav*). Figure 4.3 shows a one-line diagram. See Appendix_B.3 for a case summary.

System intact and contingency analyses were repeated on case *e02-sp09aa.sav.* As before, the results were compared against the pre-project case (case e00-sp09aa.sav) and the significantly affected facilities were identified and presented in Table 4.5 and Table_4.6.

As described in Section 4.3, system intact analysis results show that the flow on the 230 kV line between Ellendale the G132 wind farm is significantly affected. Without GI-0503 Wind Farm, the loading on this facility is 130.3% based on the 239 MVA normal rating. With GI-0503 modeled at 125 MW, the loading on this facility is 133.1% based on the normal rating.

Table 4.6 shows significantly affected facilities for N-1 contingency conditions. This table was screened to identify overloads on facilities that are in the immediate vicinity of the Max and Mallard 115 kV substations.

- GI-0503 - Mallard 115 kV Line: A new overload was observed for multi-terminal contingency '105 2' (loss of the Bismarck – Garrison and Garrison – Leland Olds 230 kV lines). The post-contingency loading on the Mallard – GI-0503 line is 110.2% based on the 120 MVA continuous rating and 100.2% based on the 132 MVA emergency rating. This overload was discussed with WAPA and was found to be due to terminal equipment limitations on the existing Max-Mallard 115 kV line. WAPA indicated that terminal equipment replacements / adjustments will be needed to bring the thermal rating of the line to 187 MVA. This will mitigate the overload.

- GI-0503 – Max 115 kV Line: Loss of the GI-0503 – Mallard 115 kV line overloaded this facility to 102.2% based on the 120 MVA continuous rating. As in the previous bullet item, this line has a conductor rating of 187 MVA. Therefore, terminal equipment replacements / adjustments will likely resolve this overload.

- Garrison – Beulah 115 kV Line: A new overload was observed on this line following contingency '105 1' (loss of Bismark-Garrison, Bismark-Washburn and Garrison-Leland Olds 230 kV lines). With GI-0503 Wind Farm modeled, the loading on this line under contingency condition is 131.5 MW which is 104.9% of Rate A (120 MVA). Rate C of this line is 132 MVA. Generation run back may help to reduce loading to acceptable level.

- As before, several facilities became overloaded following the loss of the Coyote-Center 345 kV line. This contingency was repeated by simulating the SPS action at Coyote and the overloads were mitigated.

As shown in Table 4.6, the GI-0503 Wind Farm also aggravated the flows on several other transmission facilities that are remote from the point of interconnection. These overloads have not been addressed in this study.

Table 4.7 lists the significantly affected bus voltages. These buses are remote from the study area and the voltage violations are not addressed in this study.

4.5 Sensitivity Analysis with B10T @ 165 MW North

In the analysis performed thus far, B10T is at 165 MW South. WAPA indicated that the transmission system in the Max-Mallard vicinity can be stressed further by reversing the B10T flow to 165 MW North. WAPA ran a sensitivity analysis to check the impact of the proposed plant with B10T flow set to 165 MW North.

For the purposes of this analysis, Minot Wind is modeled at 125 MW.

Pre- and post-project case summaries are shown in Appendix F.

Steady-state analysis was performed by WAPA using the GRE Contingency Program. Thermal results are shown in Appendix F. These results were screened to show impacts in the Max / Mallard vicinity and are presented in Table 4.8.

Based on the Table 4.8 results, the following observations are made:

- Several contingencies overload the Max – Minot Wind – Mallard 115 kV line. These overloads can be mitigated with terminal equipment replacements that will increase the thermal rating to 187 MVA.

- Table 4.8 also shows a post-contingency overload on the Minot Wind – Mallard 115 kV line following the Leland Olds – Logan 230 kV outage. The post-contingency loading is approx. 190 MVA. This overload can be mitigated by reducing the B10T flow to 75 MW North post-contingency in accordance with the B10T Operating Guide. See reference [4]. Implementing the B10T operating guide reduces the post-contingency flow to 169 MVA (which is below the previously mentioned 187 MVA thermal rating).

- The Mallard – Logan 115 kV line (159 MVA normal) becomes overloaded in the pre- and post-project cases following the loss of the Leland Olds – Logan 230 kV line. The overloads can be mitigated by reducing the B10T flow to 75 MW North post-contingency in accordance with the B10T Operating Guide.

- The Garrison 230/115 kV transformer becomes overloaded in the post-project case following the loss of the Coyote-Center 345 kV line. As noted previously, Coyote SPS action will likely resolve this overload.

Voltage results are shown in Table 4.9 and show no injection related issues.

4.6 Out-Year Sensitivity Analysis

WAPA requested an out-year sensitivity analysis to check the impact of the proposed wind farm under 2015 summer peak conditions. This section discusses the results of this analysis.

4.6.1 Model Development

The starting point for the development of the pre-project model (i.e., without the proposed GI-0503 Wind Farm) was case *p1e-sp15aa.sav* from the recently completed GI-0217 System Impact Study. See reference [3]. This is a MAPP 2006 Series 2011 Post-Belfield Summer Peak case with the proposed GI-0217 plant in service. In order to develop the pre-project case, several changes were made to this case with input from the study ad hoc group. Some of the more significant changes included the following:

- Set B10T flow as 165 MW North
- Purge the second 345 kV line from White (#66537) to Brooking (#60501).
- Purge GI-0217 plant and associated reinforcements (this project has withdrawn from the queue)
- Scale MH, ND and TC loads to 2015 summer peak levels based on *peakload.data* file
- Add Rhame 230 kV substation and Belfield – Rhame 230 kV line
- Add capacitor banks scheduled for Little Missouri and Dawson County
- Add Charlie Creek-Williston 230 kV line and new 115 kV line from Tioga Jct. – Tioga 115
- Add 10 MVAr of capacitors at Tioga Jct. 115 kV bus
- Update MDU's Tioga-Tioga Jct. line to 159 MVA
- Add Keystone project
- Add the following prior-queued projects
    - G132 (180 MW wind on Ellendale – Wishek 230 kV line)
    - G291 (19 MW wind at Edgeley)
    - G297 (29 MW wind on Bowdle – Glenham 115 kV line)
    - GI-0303 (170 MW at WAPA at White 115 kV)
    - G248 (19 MW at Ellendale 115 kV)
    - G256 (45 MW at Glendive 115 kV)
    - GI-0508 (50 MW Wilton wind)
- Add Big Stone II and associated reinforcement (655 MW generation and 55 MW load). Dispatch generation to the following units:
    - OTP (159 MW)
    - MDU (159 MW)
    - MRES (206 MW)
    - CMMPA (41 MW)
    - HCPD (35 MW)

- Update Alexandria area transmission

- Reduce load on the Little Missouri and Rhame 115 kV buses per WAPA's comments
- Miscellaneous rating changes

Table 4.10 shows a list of the prior-queued projects included in the pre-project steady-state model.

As in the summer off-peak cases, the Arrowhead-Gardner Park 345 kV line is included in the peak model. Also, no CAPX 2020 projects are modeled in the case.

The resulting pre-project summer peak case is named *k00-sp15aa.sav*. The North Dakota load is at 109.3% of the 2015 peak load level of 3251 MW. (Note: The load level is 109.3% because of the load growth in Western ND; it is assumed that the projected peak load of 3251 MW did not factor in the load growth).

After establishing the pre-project case, the proposed GI-0503 Wind Farm was added with an output of 125 MW in order to create the post-project summer peak case *k02-sp15aa.sav*. For the purposes of this study, the GI-0503 Wind Farm was dispatched by scaling up load in MAIN.

Detailed case summaries are given in Appendix B. Corresponding North Dakota Coalfields one-line diagrams without and with the GI-0503 Wind Farm are depicted in Figure 4.4 and 4.5 respectively.

The impact of the GI-0503 Wind Farm was studied both under system intact and N-1 contingency conditions. Full ac power flow solutions were used. Results are described in the following sections.

4.6.2 System Intact Analysis

Significantly affected facility loadings are presented in Table 4.11. As discussed previously, the system intact overloads on the Minot Wind – Mallard 115 kV line can be mitigated with terminal equipment replacements to bring the thermal rating to 187 MVA.

The incremental impact of the proposed GI-0503 project on bus voltages is insignificant.

4.6.3 Contingency Analysis

Table 4.12 lists the significantly affected facility loadings for contingency conditions for without and with the GI-0503 Wind Farm. The table lists the limiting facilities and associated contingencies that cause overloads, along with a comparison of facility loadings expressed both in MVA and in percent on Rate A without and with the GI-0503 Wind Farm.

Note: The B10T Operating Guide was applied for the following two contingencies:

Leland Olds – Logan 230 kV outage: B10T set to 75 MW North

Logan-Tioga 230 kV outage: B10T set to 50 MW North

An examination of the Table 4.12 violations showed the following injection related constraints:

- Max-Minot Wind 115 kV line: As discussed previously, the post-contingency overload on this line can be mitigated by terminal equipment replacements.

- Minot Wind – Mallard 115 kV line: The worst case loading on this line for loss of the Leland Olds-Logan 230 kV line is 193 MVA (with B10T N limited to 75 MW N for this contingency). This will need to be addressed and may likely involve generation runback at Minot Wind. Analysis shows that running back Minot Wind to 100 MW will mitigate this overload.

- Mallard – Logan 115 kV line: This line becomes overloaded for the loss of the Leland Olds – Logan 230 kV line (with B10T N limited to 75 MW N for this contingency). The post-contingency loading is approx. 171 MVA (the line has a normal and emergency rating of 159 MVA; the conductor rating is 215 MVA).

  Additional analysis showed that the loading on the Mallard-Logan 115 kV line is sensitive to the load in the Stanley area (50 MW of load is modeled at the Stanley 115 kV in the out-year cases). WAPA indicated that the load may be more than the existing transmission can accommodate without transmission improvements to serve this increase load. With a more realistic Tioga/Stanley load projection (20 MW at Stanley 115), the post-contingency loading on the Mallard-Logan 115 kV line reduces to 155 MW. This therefore, may not be a constraint.

  Note: The Stanley area load level does not impact the loading on the Minot Wind – Mallard 115 kV line.

Analysis of post-contingency voltages showed voltage violations at several remote buses, both with and without the proposed project. Table 4.13 lists the significantly affected bus voltages. Several buses in the Stanley/Tioga area showed post-contingency voltage violations following the Logan-Tioga 230 kV outage (with B10T limited to 50 MW North). These violations are sensitive to the load level at Stanley 115. With a more realistic Tioga/Stanley load projection (20 MW at Stanley 115), the voltage violations are resolved.

4.7 Sensitivity Analysis With Williston – Tioga 230 kV Line Added

WAPA requested a limited out-year sensitivity analysis with Williston – Tioga 230 kV line added to check the impact of the proposed wind farm under this system condition. This section discusses the results of this analysis.

4.7.1 Model Development

The starting point for the development of the pre-project model (i.e., without the proposed GI-0503 Wind Farm) was case *k00-sp15aa.sav* which is pre-project 2015 summer peak case described in Section 4.6. The Williston – Tioga 230 kV line was added to develop the pre-project sensitivity case which is named *k60-sp15aa.sav*.

After establishing the pre-project case, the proposed GI-0503 Wind Farm was added with an output of 125 MW in order to create the post-project sensitivity case *k62-sp15aa.sav*. A post-project sensitivity case *k61-sp15aa.sav* with output of the proposed GI-0503 Wind Farm at 100 MW was also developed for this analysis. As before, the GI-0503 Wind Farm was dispatched by scaling up load in MAIN.

Detailed case summaries are given in Appendix B. Corresponding North Dakota Coalfields one-line diagrams without and with the GI-0503 Wind Farm at 100 MW and 125 MW are depicted in Figure 4.6, 4.7, and 4.8 respectively.

4.7.2 Contingency Analysis

The impact of the GI-0503 Wind Farm was studied for the following two contingencies:

- Loss of Tioga – Logan 230 kV line
- Loss of Leland Olds – Logan 230 kV line

The following facilities were monitored:

- Mallard – Minot Wind 115 kV line
- Mallard – Logan 115 kV line

As described previously, the loss of the Leland Olds – Logan and Tioga – Logan 230 kV lines would trigger B10T reduction (75 MW reduction and 50 MW reduction respectively). WAPA indicated that for both these outages, the B10T phase shifter would block due to greater than 40 MW of immediate power change through the phase shifter following the contingency. For this scenario, the phase shifter would not be allowed to immediately restore the pre-contingent schedule.

Therefore, for the purposes of this analysis, the contingencies were run first with the B10T phase shifter locked at 165 MW North (see Table 4.14) and then with the corresponding B10T reduction modeled (see Table 4.15).

Table 4.14 shows the loading conditions for the GI-503 to Mallard 115 kV line during the initial block of the B10T Phase Shifter. During this condition, maximum loading seen on the GI-503 to Mallard 115 kV line would be 194.1 MVA (with 125 MW on GI-0503). Reducing the wind to 100 MW, the loading would be reduced to 182 MVA which is below the 187 MVA rating if the line clearances are sufficient to operate at 176°F.

Table 4.15 shows that once B10T is reduced to the 75 MW schedule as allowed in the existing B10T guide for an outage of the Leland Olds-Logan 230 kV line, post-contingency loadings will be below the 187 MVA level for all conditions studied (185 MVA at 125 MW wind output). Therefore, additional operating procedures such as a Remedial Action Scheme (RAS) with local sensing that would drop the wind farm if loading on the Max-Mallard line approaches the thermal limit may only be needed at the ultimate output level of 125 MW. The RAS may be needed to reduce the loading on this line below the thermal limit for loss of Leland Olds-Logan 230 kV in the 2015 out year timeframe.

4.8 Conclusions

The interconnection of the proposed GI-503 wind farm impacted several transmission facilities and resulted in steady-state criteria violations based upon the modeled delivery of the generator's output.

Worst case steady-state analysis was done with B10T at 165 MW North and Minot Wind at 125 MW. Analysis was performed both for a near-term case (2009 timeframe) and an out-year case (2015 timeframe). The following conclusions are drawn:

- Results of the near-term and out-year analyses show that terminal equipment replacements / adjustments would be required on the Max-Minot Wind-Mallard 115 kV line to allow this line to be increased to its conductor loading limit of 187 MVA.

- Post-contingency overloads were observed on the Minot Wind – Mallard 115 kV line following the Leland Olds – Logan 230 kV outage both in the near-term and out-year cases.

  For the near-term scenario, these overloads are mitigated by existing B10T operation and through the implementation of the existing B10T Operating Guide (B10T reduced to 75 MW North) to reduce the loading below 187 MVA with Minot Wind at its maximum requested output of 125 MW.

  In addition, for the out-year scenario at 100 MW Minot wind output, overloads on the Minot Wind-Mallard 115 kV line above the 187 MVA thermal level are mitigated by existing B10T operations and the existing B10T Operating Guide.

For the out-year scenario with the wind at the ultimate 125 MW output level, however, additional operating procedures (over and above the B10T Operating Guide) will be needed to reduce the loading below 187 MVA. This will need to be addressed and may likely involve generation runback at Minot Wind. Remedial Action Scheme (RAS) with local sensing may be considered to drop the wind farm if loading on the Max-Mallard line approaches the thermal limit. The RAS may be needed to reduce the loading on this line below the thermal limit for loss of Leland Olds-Logan 230 kV in the 2015 out year timeframe at the ultimate 125 MW output level.

- One other potential loading concern that was identified in under B10T South scenarios was the loading on the Garrison-Beulah 115 kV line (see Section 4.4). A new overload was observed on this line following contingency '105 1' (loss of Bismark-Garrison, Bismark-Washburn and Garrison-Leland Olds 230 kV lines). The worst case post-contingency loading was observed in the near-term analysis on this line at 131.5 MW which is 104.9% of Rate A (120 MVA). Rate C of this line is 132 MVA. No overload was seen in the out-year analysis. Existing operating procedures such as the Garrison Unit Tripping Scheme may be utilized to reduce loading to acceptable levels, if necessary.

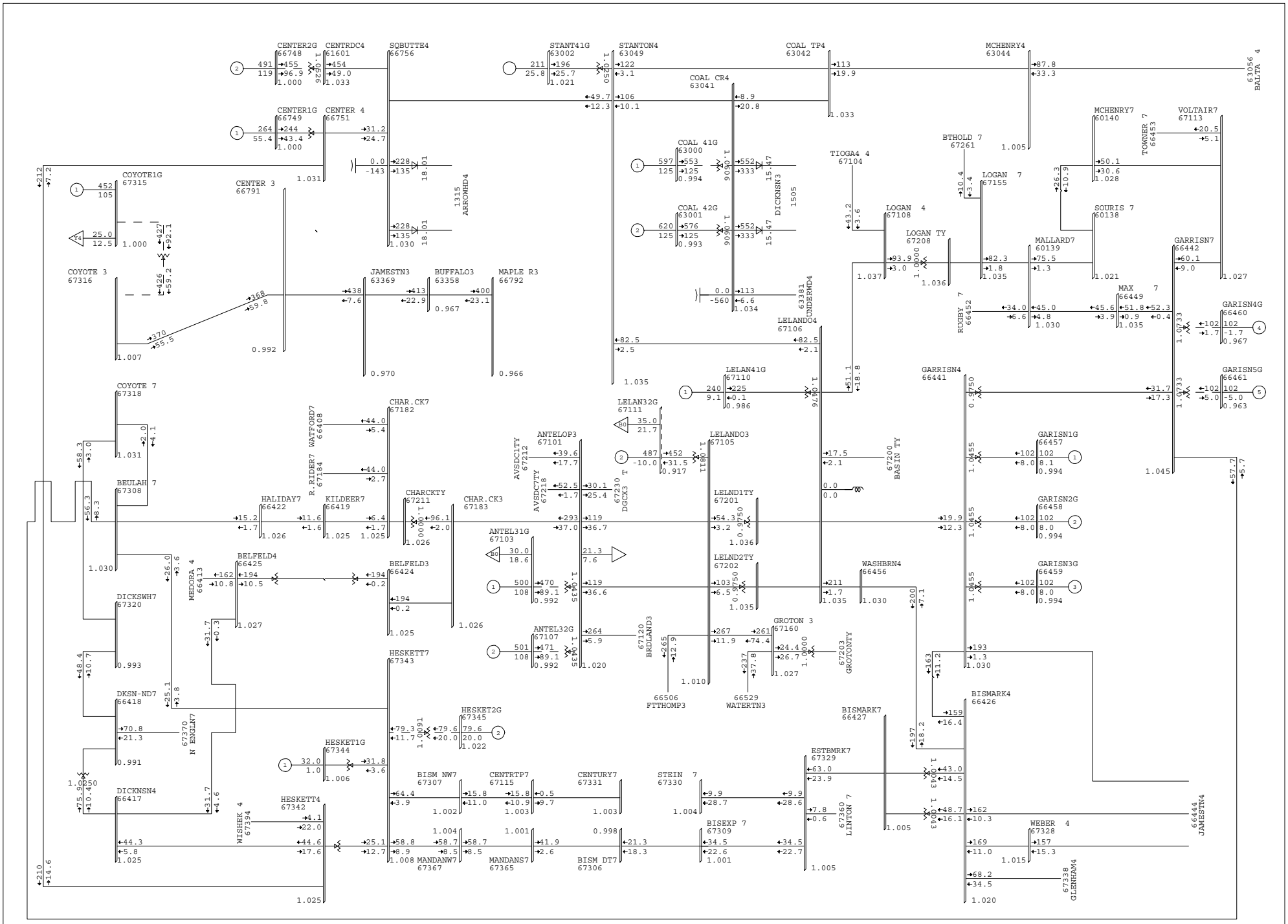

E00-SP09AA.SAV;SUMMER;PK LD;SYSTEM INTACT : ND=1259,MH=1380,MW=871,OHMH=0,OHMP=150,EWTW=-121,BD=167 THU, DEC 06 2007 11:42	100% RATEA 0.950 UV 1.050 OV	BUS -VOLTAGE(PU) BRANCH -MW/MVAR EQUIPMENT -MW/MVAR

Figure 4.1: North Dakota - Without GI-0503 (Case e00)

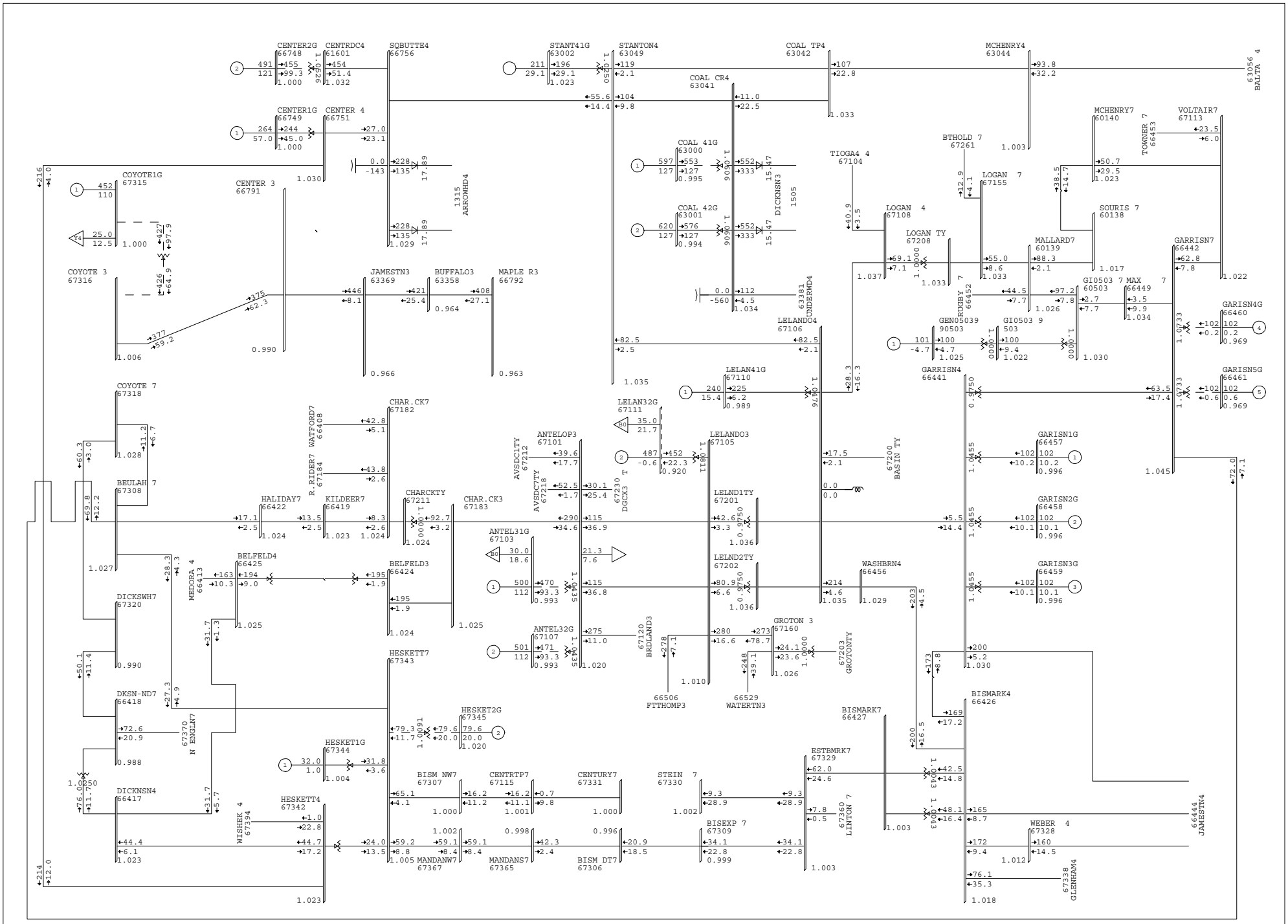

E01-SP09AA.SAV;SUMMER;PK LD;SYSTEM INTACT :
ND=1345,MH=1382,MW=892,OHMH=0,OHMP=150,EWTW=-120,BD=167
THU, DEC 06 2007 11:43

100% RATEA
0.950 UV 1.050 OV

BUS -VOLTAGE(PU)
BRANCH -MW/MVAR
EQUIPMENT -MW/MVAR

Figure 4.2: North Dakota - With 100 MW GI-0503 (Case e01)

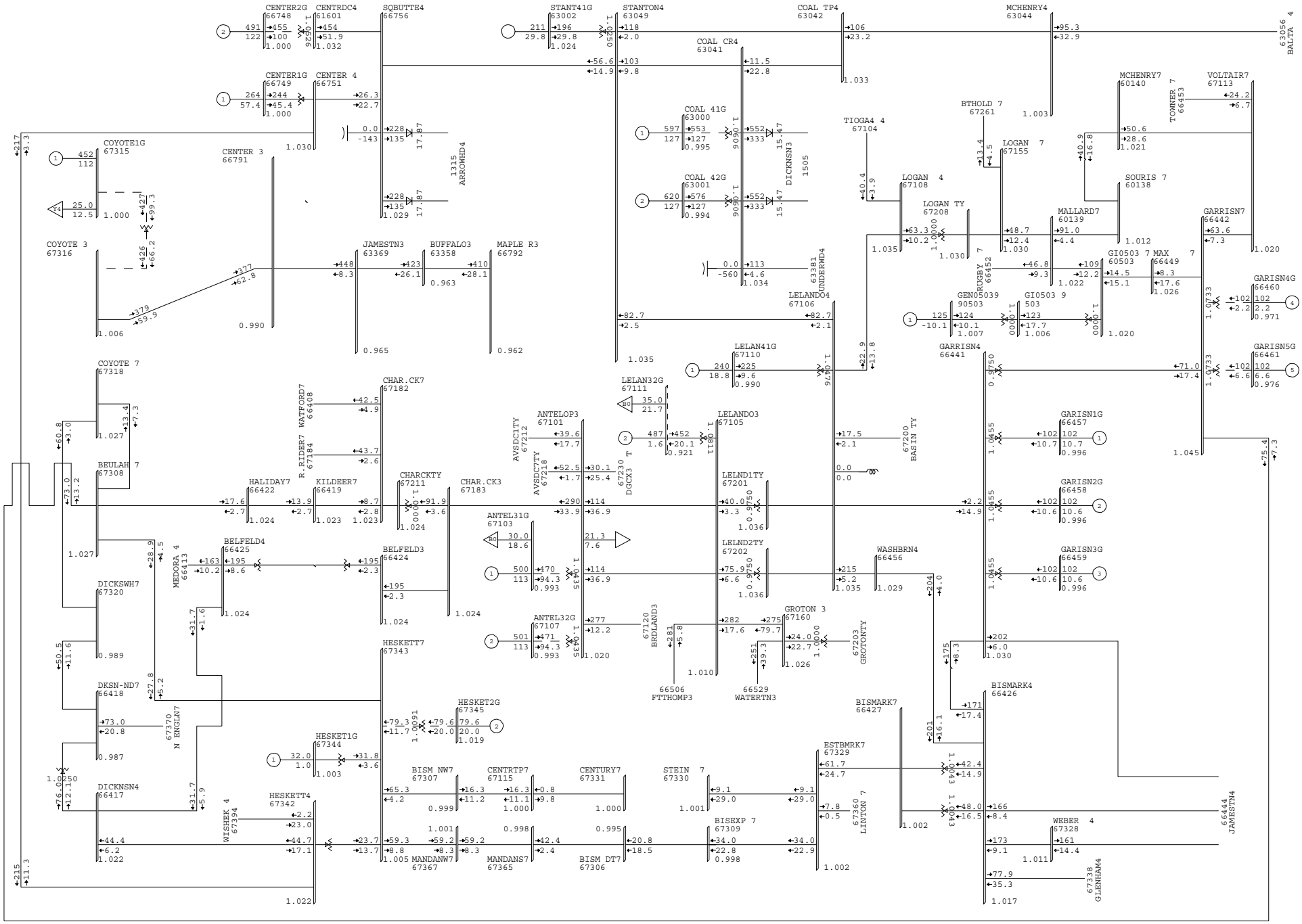

E02-SP09AA.SAV;SUMMER;PK LD;SYSTEM INTACT :
ND=1365,MH=1382,MW=897,OHMH=0,OHMP=150,EWTW=-120,BD=166
THU, DEC 06 2007 11:47

100% RATEA
0.950 UV 1.050 OV

BUS -VOLTAGE(PU)
BRANCH -MW/MVAR
EQUIPMENT -MW/MVAR

Figure 4.3: North Dakota - With 125 MW GI-0503 (Case e02)

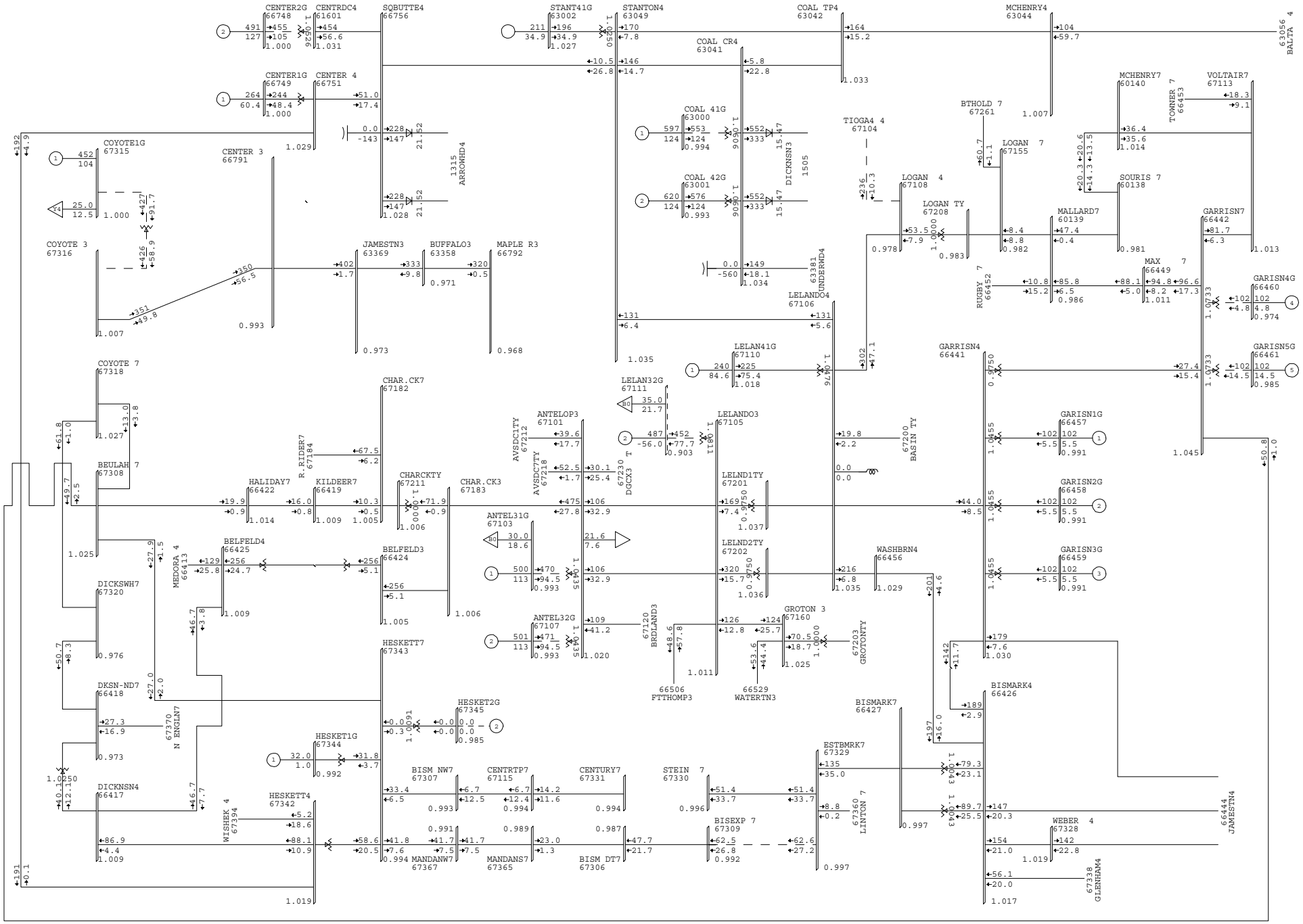

K00-SP15AA.SAV;SUMMER;PK LD;SYSTEM INTACT :
ND=353,MH=1260,MW=-338,OHMH=0,OHMP=150,EWTW=-120,BD=-167
MON, MAR 17 2008 16:35

100% RATEA
0.950 UV 1.050 OV

BUS -VOLTAGE(PU)
BRANCH -MW/MVAR
EQUIPMENT -MW/MVAR

Figure 4.4: North Dakota - Without GI-0503 (Case k00)

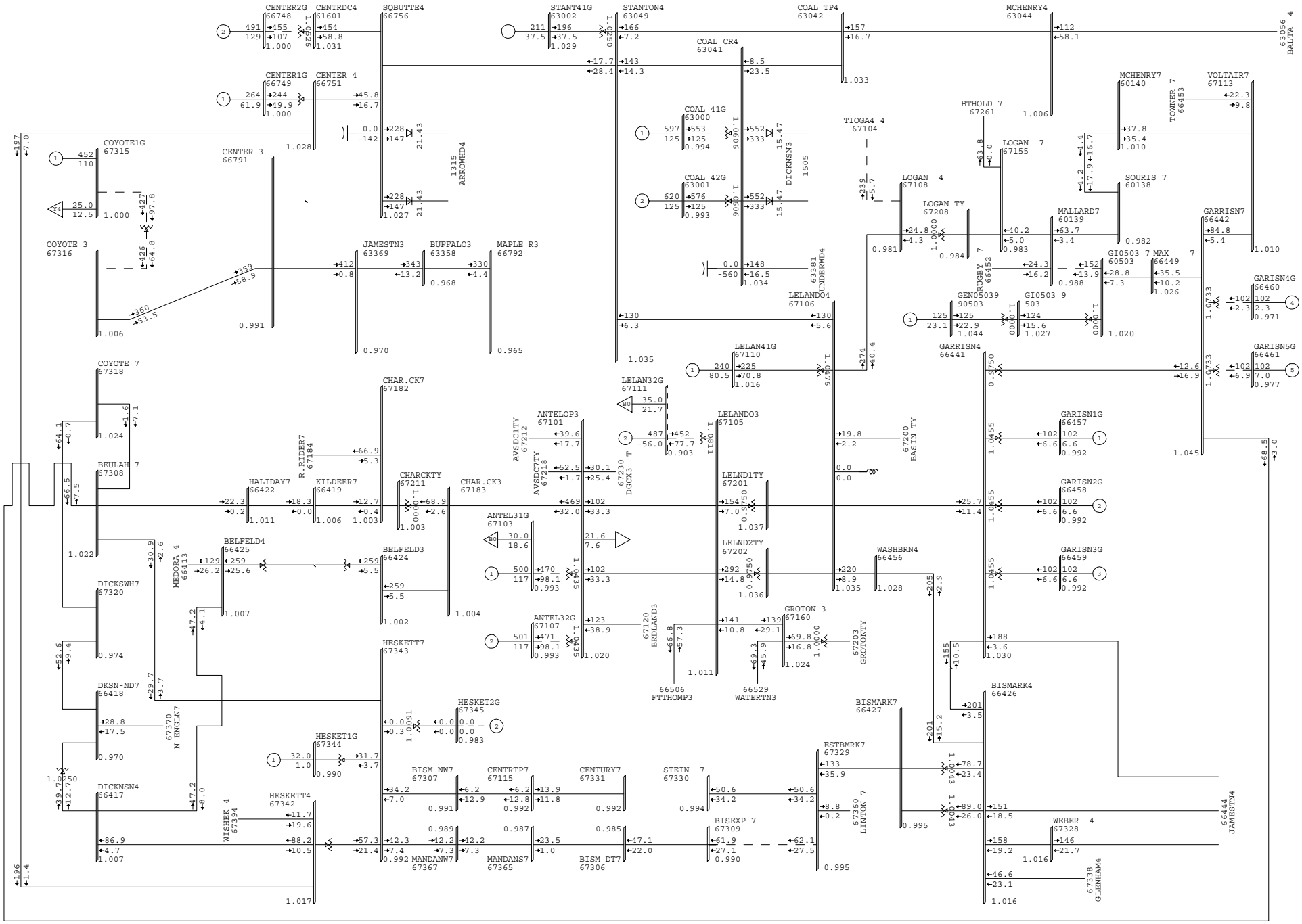

K02-SP15AA.SAV;SUMMER;PK LD;SYSTEM INTACT :
ND=471,MH=1261,MW=-308,OHMH=0,OHMP=150,EWTW=-120,BD=-167
MON, MAR 17 2008 16:39

100% RATEA
0.950 UV 1.050 OV

BUS -VOLTAGE(PU)
BRANCH -MW/MVAR
EQUIPMENT -MW/MVAR

Figure 4.5: North Dakota - With 125 MW GI-0503 (Case k02)

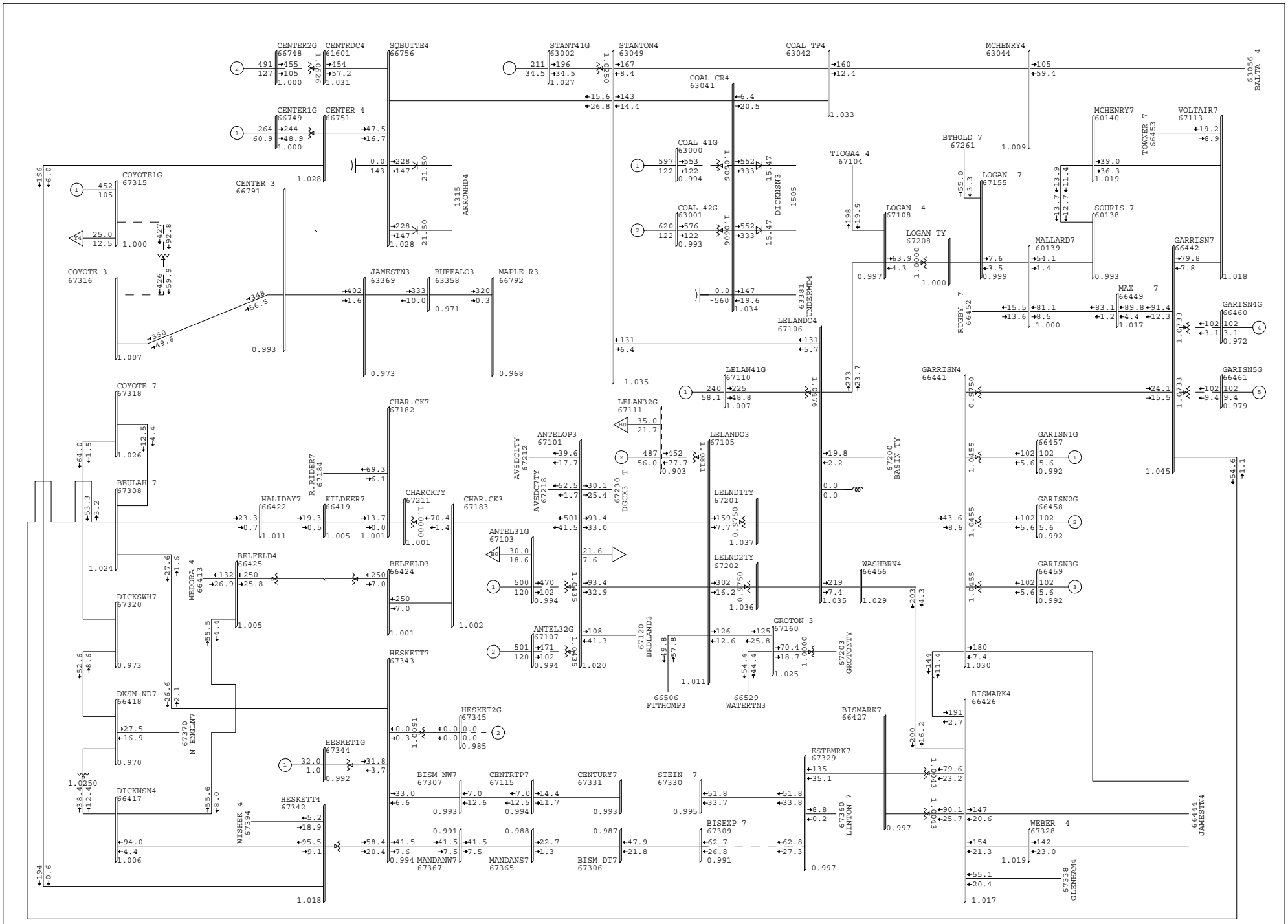

K60-SP15AA.SAV;SUMMER;PK LD;SYSTEM INTACT :
ND=358,MH=1262,MW=-336,OHMH=0,OHMP=150,EWTW=-120,BD=-168
WED, MAR 26 2008 10:10

100% RATEA
0.950 UV 1.050 OV

BUS -VOLTAGE(PU)
BRANCH -MW/MVAR
EQUIPMENT -MW/MVAR

Figure 4.6: North Dakota - Without GI-0503 (Case k60)

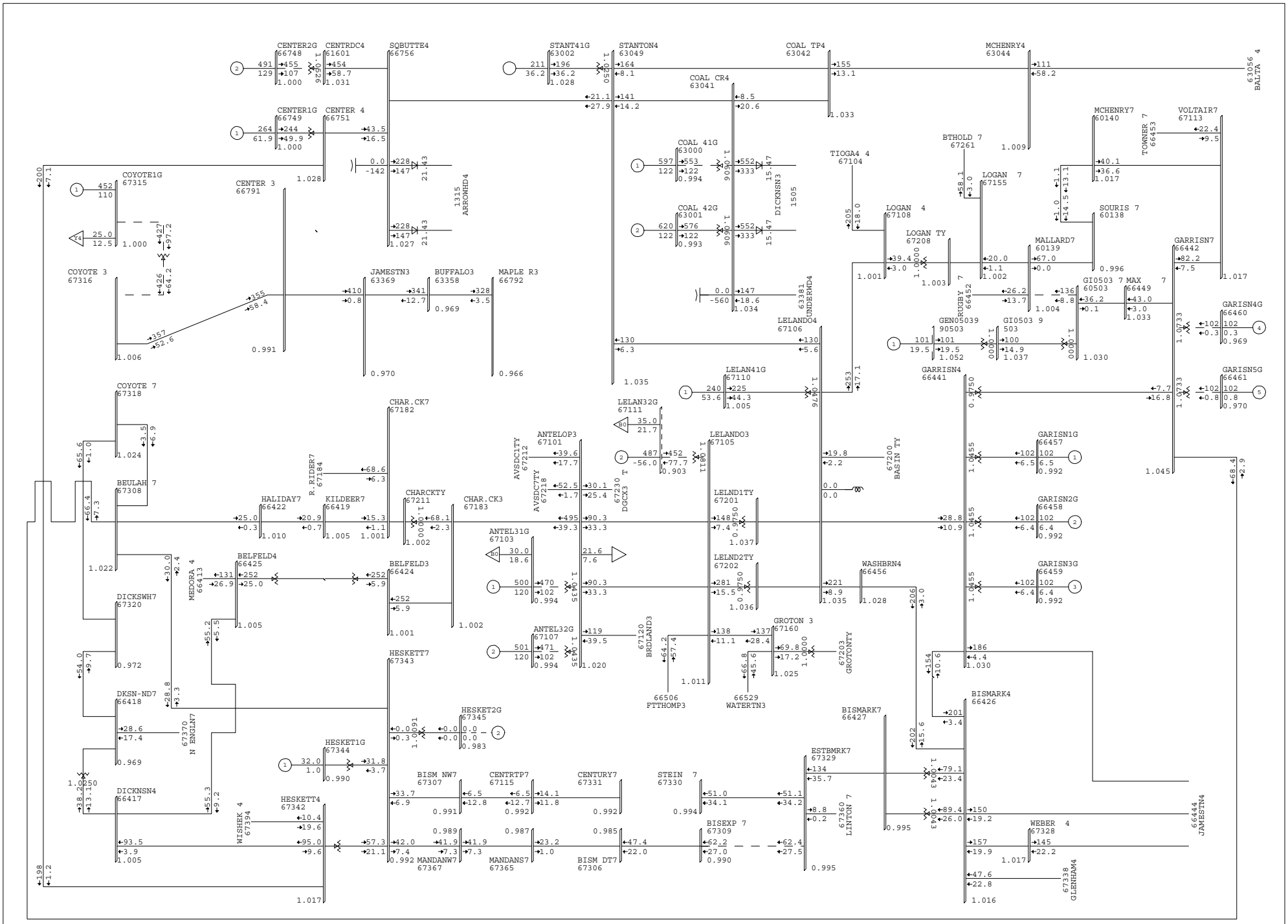

K61-SP15AA.SAV;SUMMER;PK LD;SYSTEM INTACT :
ND=451,MH=1264,MW=-311,OHMH=0,OHMP=150,EWTW=-120,BD=-170
WED, MAR 26 2008 10:11

100% RATEA
0.950 UV 1.050 OV

BUS -VOLTAGE(PU)
BRANCH -MW/MVAR
EQUIPMENT -MW/MVAR

Figure 4.7: North Dakota - With 100 MW GI-0503 (Case k61)

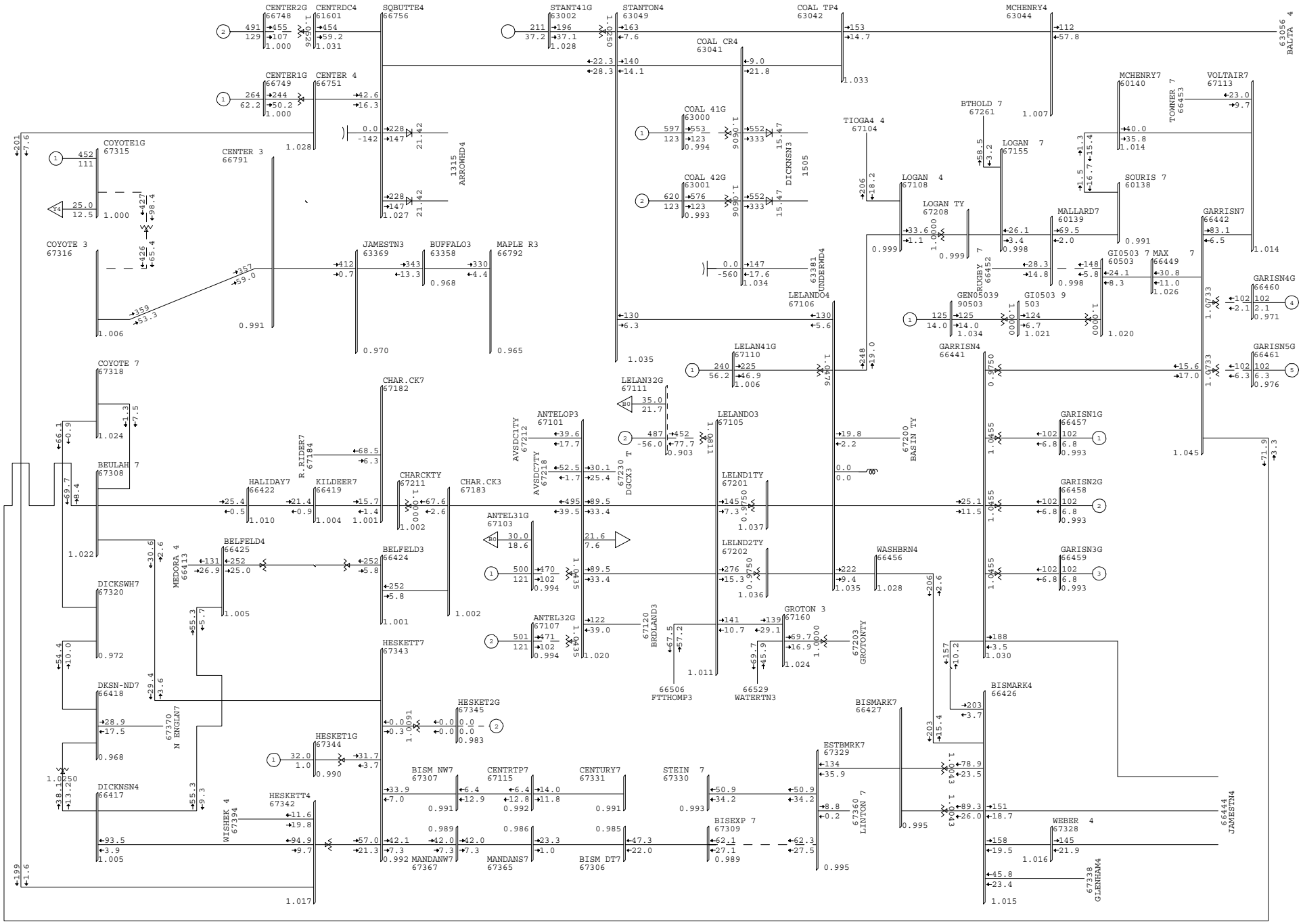

K62-SP15AA.SAV;SUMMER;PK LD;SYSTEM INTACT :
ND=472,MH=1264,MW=-306,OHMH=0,OHMP=150,EWTW=-120,BD=-170
WED, MAR 26 2008 10:12

100% RATEA
0.950 UV 1.050 OV

BUS -VOLTAGE(PU)
BRANCH -MW/MVAR
EQUIPMENT -MW/MVAR

Figure 4.8: North Dakota - With 125 MW GI-0503 (Case k62)

Table 4.1: Prior-Queued Projects Modeled in the Pre-Project Power Flow Case (Case e00-sp09aa.sav)

Project	Name	Prime Mover	Net MW	Status (ON/OFF)
GI-0101a	RCDC	-	200	ON
GI-0208	Edgeley (BEPC)	Wind	40	ON
GI-0209	Ft. Thompson	Wind	40	ON
GI-0316	Groton CT	Gas	120	ON
G256	Glendive #2	Gas	45	ON
G291	Edgeley	Wind	19	ON
G248	Dickey	Wind	19	ON
G370	Anson #4	Gas	205	ON
G359	Dickey	Wind	150	ON
G438	Marshall	Wind	19.5	ON
G408	McHenry	Wind	12	ON
G132	Ellendale	Wind	180	ON
G297	Glenham	Wind	39	ON
G380	Rugby	Wind	150	ON
TI-0301	Brookings Co. - White Interconnection	-	-	ON
G255	Yankee	Wind	200	ON
G311	Gascoyne	Wind	19	ON
GI-0108	White	Wind	200	ON
G392	Big Stone 2	Coal	600	OFF
GI-0217	Belfield	Coal	500	OFF (Withdrawn)
GI-0402	Big Stone / Grant	Coal	200	OFF
GI-0403	Big Stone / Grant	Coal	75	OFF
GI-0303	Brookings (White 115)	Wind	170	ON
GI-0321	Leland Olds 3	Coal	500	OFF
GI-0503	Minot	Wind	100	OFF

Table 4.2: Significantly Affected Facilities - System Intact Conditions
(Without and with 100 MW GI-0503)

MONITORED ELEMENT	RATEA	WITHOUT GI-0503		WITH 100MW GI-0503		CHANGE		TDF
		LOADING	CURRENT	LOADING	CURRENT	LOADING	CURRENT	
	MVA	%	MVA	%	MVA	%	MVA	
67326 ELLENDL4 230 67390 G132 230 1	239.0	130.3	314.2	132.6	319.2	2.3	5.0	5.0%

Table 4.3: Significantly Affected Facilities - N-1 Contingency Conditions
(Without and with 100 MW GI-0503)

MONITORED ELEMENT	RATEA	RATE C	WITHOUT GI-0503		WITH 100 MW GI-0503		CHANGE		TDF	CONTINGENCY
	MVA	MVA	%*	MVA	%*	MVA	%*	MVA		
61948 BYRON 5 161 61906 MAPLE LF 161 1	279.0	307.0	104.3	299.8	105.5	303.3	1.2	3.5	3.50%	60102 ADAMS 3 345 - 63032 PL VLLY3 345 ckt 1
	279.0	307.0	100.2	288.0	101.3	291.1	1.1	3.1	3.10%	825 2
63189 MAPLER1Y 345 66754 MAPLE R4 230 1	336.0	420.0	114.8	385.6	117.0	393.2	2.2	7.6	7.60%	63190 MAPLER2Y 345 - 66792 MAPLE R3 345 ckt 1
	336.0	420.0	114.8	385.6	117.0	393.2	2.2	7.6	7.60%	MAPLER2Y
	336.0	420.0	114.7	385.6	117.0	393.1	2.3	7.5	7.50%	63190 MAPLER2Y 345 - 66754 MAPLE R4 230 ckt 1
63189 MAPLER1Y 345 66792 MAPLE R3 345 1	336.0	420.0	114.8	385.6	117.0	393.2	2.2	7.6	7.60%	63190 MAPLER2Y 345 - 66792 MAPLE R3 345 ckt 1
	336.0	420.0	114.8	385.6	117.0	393.2	2.2	7.6	7.60%	MAPLER2Y
	336.0	420.0	114.7	385.6	117.0	393.1	2.3	7.5	7.50%	63190 MAPLER2Y 345 - 66754 MAPLE R4 230 ckt 1
63190 MAPLER2Y 345 66754 MAPLE R4 230 1	336.0	420.0	114.8	385.6	117.0	393.2	2.2	7.6	7.60%	63189 MAPLER1Y 345 - 66792 MAPLE R3 345 ckt 1
	336.0	420.0	114.8	385.6	117.0	393.2	2.2	7.6	7.60%	MAPLER1Y
	336.0	420.0	114.7	385.6	117.0	393.1	2.3	7.5	7.50%	63189 MAPLER1Y 345 - 66754 MAPLE R4 230 ckt 1
63190 MAPLER2Y 345 66792 MAPLE R3 345 1	336.0	420.0	114.8	385.6	117.0	393.2	2.2	7.6	7.60%	63189 MAPLER1Y 345 - 66792 MAPLE R3 345 ckt 1
	336.0	420.0	114.8	385.6	117.0	393.2	2.2	7.6	7.60%	MAPLER1Y
	336.0	420.0	114.7	385.6	117.0	393.1	2.3	7.5	7.50%	63189 MAPLER1Y 345 - 66754 MAPLE R4 230 ckt 1
63362 OAKES 4 230 67326 ELLENDL4 230 1	240.0	264.0	--	--	108.2	262.1	--	--	--	60503 GI0503 7 115 - 503 GI0503 9 34.5 ckt 1
	240.0	264.0	116.2	275.8	117.2	282.8	1.0	7.0	7.00%	63325 BROWNSV4 230 - 63327 HANKSON4 230 ckt 1
	240.0	264.0	116.2	275.8	117.2	282.8	1.0	7.0	7.00%	545
	240.0	264.0	119.5	290.5	121.6	295.1	2.1	4.6	4.60%	67326 ELLENDL4 230 - 67327 ELLENDL7 115 ckt 1
	240.0	264.0	128.6	308.5	130.8	312.9	2.2	4.4	4.40%	63369 JAMESTN3 345 - 66791 CENTER 3 345 ckt 1
	240.0	264.0	122.8	296.8	124.9	301.2	2.1	4.4	4.40%	67327 ELLENDL7 115 - 67401 ABDNJCT7 115 ckt 1
	240.0	264.0	110.1	266.3	112.2	270.7	2.1	4.4	4.40%	67401 ABDNJCT7 115 - 67402 ABDNSBT7 115 ckt 1
	240.0	264.0	125.6	300.8	127.8	305.0	2.2	4.2	4.20%	220
	240.0	264.0	115.8	280.2	117.8	284.4	2.0	4.2	4.20%	66529 WATERTN3 345 - 67160 GROTON 3 345 ckt 1
	240.0	264.0	125.4	300.4	127.5	304.5	2.1	4.1	4.10%	63358 BUFFALO3 345 - 66792 MAPLE R3 345 ckt 1
	240.0	264.0	125.9	301.6	128.0	305.7	2.1	4.1	4.10%	63358 BUFFALO3 345 - 63369 JAMESTN3 345 ckt 1
	240.0	264.0	111.6	269.6	113.6	273.7	2.0	4.1	4.10%	250
	240.0	264.0	109.2	264.3	111.1	268.4	1.9	4.1	4.10%	66521 SULLYBT4 230 - 66527 WHITLOK4 230 ckt 1
	240.0	264.0	110.9	268.0	112.8	272.0	1.9	4.0	4.00%	66445 JAMESTN7 115 - 66454 VALLEYC7 115 ckt 1
	240.0	264.0	110.0	265.8	111.7	269.8	1.7	4.0	4.00%	63379 RUGBY 4 230 - 67523 GLENBOR4 230 ckt 1
66236 WATERT1T 345 66529 WATERTN3 345 1	400.0	500.0	105.4	421.4	106.3	425.2	0.9	3.8	3.80%	60130 SPLTRTA3 345 - 66537 WHITE 3 345 ckt 1
	400.0	500.0	105.9	423.8	106.9	427.4	1.0	3.6	3.60%	60126 SPLT RK3 345 - 60130 SPLTRTA3 345 ckt 1
66236 WATERT1T 345 66530 WATERTN4 230 1	400.0	500.0	105.4	421.4	106.3	425.2	0.9	3.8	3.80%	60130 SPLTRTA3 345 - 66537 WHITE 3 345 ckt 1
	400.0	500.0	105.9	423.8	106.9	427.4	1.0	3.6	3.60%	60126 SPLT RK3 345 - 60130 SPLTRTA3 345 ckt 1
66418 DKSN-ND7 115 67320 DICKSWH7 115 1	101.4	101.4	127.4	120.9	131.2	123.9	3.8	3.0	3.00%	66791 CENTER 3 345 - 67316 COYOTE 3 345 ckt 1
66421 WILISTN7 115 67386 TIOGA7 7 115 1	79.7	99.6	108.2	88.1	113.9	92.5	5.7	4.4	4.40%	66403 DAWSONC4 230 - 66413 MEDORA 4 230 ckt 1
	79.7	99.6	112.4	91.2	118.0	95.5	5.6	4.3	4.30%	66413 MEDORA 4 230 - 66425 BELFELD4 230 ckt 1
	79.7	99.6	130.4	105.8	135.7	109.9	5.3	4.1	4.10%	67101 ANTELOP3 345 - 67183 CHAR.CK3 345 ckt 1
	79.7	99.6	100.0	82.1	104.9	85.9	4.9	3.8	3.80%	66408 WATFORD7 115 - 67182 CHAR.CK7 115 ckt 1

%: Percentage of continuous facility rating (Rate A).

Table 4.3 (Cont.): Significantly Affected Facilities - N-1 Contingency Conditions (Without and with 100 MW GI-0503)

MONITORED ELEMENT	RATEA	RATE C	WITHOUT GI-0503		WITH 100 MW GI-0503		CHANGE		TDF	CONTINGENCY
	MVA	MVA	%*	MVA	%*	MVA	%*	MVA		
66421 WILISTN7 115 67386 TIOGA7 7 115 1	79.7	99.6	103.3	84.4	107.6	87.8	4.3	3.4	3.40%	CHARCKTY
	79.7	99.6	103.3	84.4	107.6	87.8	4.3	3.4	3.40%	67183 CHAR.CK3 345 - 67211 CHARCKTY 345 ckt 1
	79.7	99.6	103.3	84.4	107.6	87.8	4.3	3.4	3.40%	67211 CHARCKTY 345 - 67182 CHAR.CK7 115 ckt 1
	79.7	99.6	108.5	87.2	112.4	90.4	3.9	3.2	3.20%	67104 TIOGA4 4 230 - 67108 LOGAN 4 230 ckt 1
66426 BISMARK4 230 67296 WARD 4 230 1	320.0	352.0	98.4	319.9	100.1	325.6	1.7	5.7	5.70%	105 1
66441 GARRISN4 230 66442 GARRISN7 115 1	133.0	166.0	93.9	124.9	119.6	159.1	25.7	34.2	34.20%	66791 CENTER 3 345 - 67316 COYOTE 3 345 ckt 1
66442 GARRISN7 115 67308 BEULAH 7 115 1	120.0	132.0	83.7	105.0	100.6	126.2	16.9	21.2	21.20%	105 1
66791 CENTER 3 345 66756 SQBUTTE4 230 1	336.0	352.0	103.1	346.5	104.9	352.6	1.8	6.1	6.10%	66791 CENTER 3 345 - 67316 COYOTE 3 345 ckt 1
67104 TIOGA4 4 230 67385 TIOGA4 7 115 1	100.0	125.0	--	--	120.7	120.7	--	--	--	60503 GI0503 7 115 - 503 GI0503 9 34.5 ckt 1
	100.0	125.0	--	--	119.8	119.8	--	--	--	60139 MALLARD7 115 - 60503 GI0503 7 115 ckt 1
	100.0	125.0	109.1	109.1	116.1	116.1	7.0	7.0	7.00%	67106 LELANDO4 230 - 67108 LOGAN 4 230 ckt 1
	100.0	125.0	116.2	116.2	120.1	120.1	3.9	3.9	3.90%	67352 KENMARE7 115 - 67380 STANLEY7 115 ckt 1
	100.0	125.0	104.5	104.5	108.2	108.2	3.7	3.7	3.70%	67380 STANLEY7 115 - 67385 TIOGA4 7 115 ckt 1
	100.0	125.0	128.8	128.8	132.5	132.5	3.7	3.7	3.70%	67155 LOGAN 7 115 - 67261 BTHOLD 7 115 ckt 1
	100.0	125.0	128.0	128.0	131.7	131.7	3.7	3.7	3.70%	67261 BTHOLD 7 115 - 67352 KENMARE7 115 ckt 1
	100.0	125.0	120.6	120.6	124.1	124.1	3.5	3.5	3.50%	67101 ANTELOP3 345 - 67120 BRDLAND3 345 ckt 1
	100.0	125.0	120.5	120.5	124.0	124.0	3.5	3.5	3.50%	250
	100.0	125.0	123.0	123.0	126.4	126.4	3.4	3.4	3.40%	66506 FTTHOMP3 345 - 67105 LELANDO3 345 ckt 1
	100.0	125.0	120.6	120.6	124.0	124.0	3.4	3.4	3.40%	67526 ST.LEON4 230 - 67575 STANLEY4 230 ckt 1
	100.0	125.0	120.6	120.6	124.0	124.0	3.4	3.4	3.40%	67541 STVITAL7 110 - 67783 ILEDESC7 110 ckt 1
	100.0	125.0	121.7	121.7	125.1	125.1	3.4	3.4	3.40%	105 3
	100.0	125.0	120.4	120.4	123.8	123.8	3.4	3.4	3.40%	67343 HESKETT7 115 - 67345 HESKET2G 13.8 ckt 1
	100.0	125.0	126.2	126.2	129.4	129.4	3.2	3.2	3.20%	210
67296 WARD 4 230 67342 HESKETT4 230 1	320.0	352.0	100.9	328.8	102.6	334.4	1.7	5.6	5.60%	105 1
67308 BEULAH 7 115 67343 HESKETT7 115 1	88.0	88.0	121.6	107.2	126.4	111.2	4.8	4.0	4.00%	66791 CENTER 3 345 - 67316 COYOTE 3 345 ckt 1
67318 COYOTE 7 115 67320 DICKSWH7 115 1	101.4	101.4	133.9	137.0	137.7	140.6	3.8	3.6	3.60%	66791 CENTER 3 345 - 67316 COYOTE 3 345 ckt 1
67326 ELLENDL4 230 67390 G132 230 1	239.0	294.6	--	--	130.3	314.2	--	--	--	60503 GI0503 7 115 - 503 GI0503 9 34.5 ckt 1
	239.0	294.6	140.4	338.7	142.9	344.4	2.5	5.7	5.70%	67105 LELANDO3 345 - 67160 GROTON 3 345 ckt 1
	239.0	294.6	149.4	357.0	152.1	362.6	2.7	5.6	5.60%	63369 JAMESTN3 345 - 66791 CENTER 3 345 ckt 1
	239.0	294.6	131.9	318.0	134.6	323.6	2.7	5.6	5.60%	66521 SULLYBT4 230 - 66527 WHITLOK4 230 ckt 1
	239.0	294.6	131.5	317.0	134.1	322.6	2.6	5.6	5.60%	66519 OAHE 4 230 - 66521 SULLYBT4 230 ckt 1
	239.0	294.6	147.3	351.3	150.1	356.9	2.8	5.6	5.60%	220
	239.0	294.6	147.4	351.7	150.2	357.1	2.8	5.4	5.40%	63358 BUFFALO3 345 - 63369 JAMESTN3 345 ckt 1
	239.0	294.6	147.1	350.7	149.7	356.1	2.6	5.4	5.40%	63358 BUFFALO3 345 - 66792 MAPLE R3 345 ckt 1
	239.0	294.6	132.2	318.5	134.7	323.9	2.5	5.4	5.40%	66527 WHITLOK4 230 - 67338 GLENHAM4 230 ckt 1
	239.0	294.6	133.4	321.0	136.0	326.3	2.6	5.3	5.30%	250
	239.0	294.6	132.9	319.8	135.4	325.1	2.5	5.3	5.30%	66426 BISMARK4 230 - 67338 GLENHAM4 230 ckt 1
	239.0	294.6	130.8	315.3	133.2	320.6	2.4	5.3	5.30%	66470 BISON 4 230 - 67347 HETINGR4 230 ckt 1

%: Percentage of continuous facility rating (Rate A).

Table 4.3 (Cont.): Significantly Affected Facilities - N-1 Contingency Conditions (Without and with 100 MW GI-0503)

MONITORED ELEMENT	RATEA	RATE C	WITHOUT GI-0503		WITH 100 MW GI-0503		CHANGE		TDF	CONTINGENCY
	MVA	MVA	%*	MVA	%*	MVA	%*	MVA		
67326 ELLENDL4 230 67390 G132 230 1	239.0	294.6	135.4	325.6	137.9	330.9	2.5	5.3	5.30%	66506 FTTHOMP3 345 - 67105 LELANDO3 345 ckt 1
	239.0	294.6	129.3	312.1	131.8	317.4	2.5	5.3	5.30%	67310 BOWMAN 4 230 - 67347 HETINGR4 230 ckt 1
	239.0	294.6	133.1	320.3	135.5	325.5	2.4	5.2	5.20%	63047 RAMSEY 4 230 - 66755 PRAIRIE4 230 ckt 1
67385 TIOGA4 7 115 67386 TIOGA7 7 115 1	120.0	132.0	103.0	126.4	106.9	130.8	3.9	4.4	4.40%	66413 MEDORA 4 230 - 66425 BELFELD4 230 ckt 1
	120.0	132.0	100.2	123.3	104.0	127.7	3.8	4.4	4.40%	66403 DAWSONC4 230 - 66413 MEDORA 4 230 ckt 1
	120.0	132.0	115.0	141.1	118.5	145.2	3.5	4.1	4.10%	67101 ANTELOP3 345 - 67183 CHAR.CK3 345 ckt 1
	120.0	132.0	100.6	122.1	103.1	125.3	2.5	3.2	3.20%	67104 TIOGA4 4 230 - 67108 LOGAN 4 230 ckt 1

%: Percentage of continuous facility rating (Rate A).

Table 4.4: Significantly Affected Bus Voltages - N-1 Contingency Conditions (Without and with 100 GI-0503)

SUBSTATION			CONTINGENCY	WITHOUT GI-0503	WITH 100 MW GI-0503	CHAN
NUM	NAM	KV		PU	PU	PU
61690	TWO HBR7	115.0	61690 TWO HBR7 115 - 62170 WALDO 7 115 ckt 1	1.0020	1.0591	0.0571
62445	4CORNRS7	115.0	61673 ARROWHD7 115 - 62445 4CORNRS7 115 ckt 1	0.9012	0.8895	-0.0117

Table 4.5: Significantly Affected Facilities - System Intact Conditions
(Without and with 125 MW GI-0503)

MONITORED ELEMENT	RATEA	WITHOUT GI-0503		WITH 125MW GI-0503		CHANGE		TDF
		LOADING	CURRENT	LOADING	CURRENT	LOADING	CURRENT	
	MVA	%	MVA	%	MVA	%	MVA	
67326 ELLENDL4 230 67390 G132 230 1	239.0	130.3	314.2	133.1	320.3	2.8	6.1	4.88%

Table 4.6: Significantly Affected Facilities - N-1 Contingency Conditions
(Without and with 125 MW GI-0503)

MONITORED ELEMENT	RATE A	RATE C	WITHOUT GI-0503		WITH 125 MW GI-0503		CHANGE		TDF	CONTINGENCY
	MVA	MVA	%*	MVA	%*	MVA	%*	MVA		
60139 MALLARD7 115 60503 GI0503 7 115 1	120.0	132.0	--	--	110.2	134.9	--	--	--	105 2
	120.0	132.0	--	--	108.0	132.2	--	--	--	66791 CENTER 3 345 - 67316 COYOTE 3 345 ckt 1
	120.0	132.0	--	--	105.0	128.5	--	--	--	66441 GARRISN4 230 - 66442 GARRISN7 115 ckt 1
	120.0	132.0	--	--	102.8	125.8	--	--	--	67108 LOGAN 4 230 - 67208 LOGAN TY 230 ckt 1
	120.0	132.0	--	--	102.8	125.8	--	--	--	67208 LOGAN TY 230 - 67155 LOGAN 7 115 ckt 1
	120.0	132.0	--	--	102.8	125.8	--	--	--	LOGAN TY
	120.0	132.0	--	--	102.7	125.8	--	--	--	60139 MALLARD7 115 - 67155 LOGAN 7 115 ckt 1
	120.0	132.0	--	--	102.6	125.5	--	--	--	66442 GARRISN7 115 - 67113 VOLTAIR7 115 ckt 1
	120.0	132.0	--	--	102.4	125.3	--	--	--	105 1
	120.0	132.0	--	--	101.5	124.2	--	--	--	60503 GI0503 7 115 - 66449 MAX 7 115 ckt 1
60503 GI0503 7 115 66449 MAX 7 115 1	120.0	132.0	--	--	102.2	125.1	--	--	--	60139 MALLARD7 115 - 60503 GI0503 7 115 ckt 1
61948 BYRON 5 161 61906 MAPLE LF 161 1	279.0	307.0	104.3	299.8	105.8	304.1	1.5	4.3	3.44%	60102 ADAMS 3 345 - 63032 PL VLLY3 345 ckt 1
	279.0	307.0	100.2	288.0	101.5	291.9	1.3	3.9	3.12%	825 2
63189 MAPLER1Y 345 66754 MAPLE R4 230 1	336.0	420.0	114.8	385.6	117.6	395.0	2.8	9.4	7.52%	63190 MAPLER2Y 345 - 66792 MAPLE R3 345 ckt 1
	336.0	420.0	114.8	385.6	117.6	395.0	2.8	9.4	7.52%	MAPLER2Y
63189 MAPLER1Y 345 66754 MAPLE R4 230 1	336.0	420.0	114.7	385.6	117.5	394.9	2.8	9.3	7.44%	63190 MAPLER2Y 345 - 66754 MAPLE R4 230 ckt 1
63189 MAPLER1Y 345 66792 MAPLE R3 345 1	336.0	420.0	114.8	385.6	117.6	395.0	2.8	9.4	7.52%	MAPLER2Y
	336.0	420.0	114.8	385.6	117.6	395.0	2.8	9.4	7.52%	63190 MAPLER2Y 345 - 66792 MAPLE R3 345 ckt 1
	336.0	420.0	114.7	385.6	117.5	395.0	2.8	9.4	7.52%	63190 MAPLER2Y 345 - 66754 MAPLE R4 230 ckt 1
63190 MAPLER2Y 345 66754 MAPLE R4 230 1	336.0	420.0	114.8	385.6	117.6	395.0	2.8	9.4	7.52%	63189 MAPLER1Y 345 - 66792 MAPLE R3 345 ckt 1
	336.0	420.0	114.8	385.6	117.6	395.0	2.8	9.4	7.52%	MAPLER1Y
	336.0	420.0	114.7	385.6	117.5	394.9	2.8	9.3	7.44%	63189 MAPLER1Y 345 - 66754 MAPLE R4 230 ckt 1
63190 MAPLER2Y 345 66792 MAPLE R3 345 1	336.0	420.0	114.8	385.6	117.6	395.0	2.8	9.4	7.52%	MAPLER1Y
	336.0	420.0	114.8	385.6	117.6	395.0	2.8	9.4	7.52%	63189 MAPLER1Y 345 - 66792 MAPLE R3 345 ckt 1
	336.0	420.0	114.7	385.6	117.5	395.0	2.8	9.4	7.52%	63189 MAPLER1Y 345 - 66754 MAPLE R4 230 ckt 1
63362 OAKES 4 230 67326 ELLENDL4 230 1	240.0	264.0	--	--	108.2	262.1	--	--	--	60503 GI0503 7 115 - 503 GI0503 9 34.5 ckt 1
	240.0	264.0	116.2	275.8	117.4	283.2	1.2	7.4	5.92%	63325 BROWNSV4 230 - 63327 HANKSON4 230 ckt 1
	240.0	264.0	116.2	275.8	117.4	283.2	1.2	7.4	5.92%	545
	240.0	264.0	107.8	258.8	109.8	265.4	2.0	6.6	5.28%	61611 WINGRIV4 230 - 61612 RIVERTN4 230 ckt 1
	240.0	264.0	128.6	308.5	131.4	314.2	2.8	5.7	4.56%	63369 JAMESTN3 345 - 66791 CENTER 3 345 ckt 1
	240.0	264.0	119.5	290.5	122.0	296.1	2.5	5.6	4.48%	67326 ELLENDL4 230 - 67327 ELLENDL7 115 ckt 1
	240.0	264.0	122.8	296.8	125.4	302.2	2.6	5.4	4.32%	67327 ELLENDL7 115 - 67401 ABDNJCT7 115 ckt 1
	240.0	264.0	110.1	266.3	112.6	271.7	2.5	5.4	4.32%	67401 ABDNJCT7 115 - 67402 ABDNSBT7 115 ckt 1
	240.0	264.0	115.8	280.2	118.3	285.4	2.5	5.2	4.16%	66529 WATERTN3 345 - 67160 GROTON 3 345 ckt 1
	240.0	264.0	125.4	300.4	128.1	305.5	2.7	5.1	4.08%	63358 BUFFALO3 345 - 66792 MAPLE R3 345 ckt 1
	240.0	264.0	125.9	301.6	128.5	306.7	2.6	5.1	4.08%	63358 BUFFALO3 345 - 63369 JAMESTN3 345 ckt 1
	240.0	264.0	125.6	300.8	128.4	305.9	2.8	5.1	4.08%	220
	240.0	264.0	111.6	269.6	114.0	274.5	2.4	4.9	3.92%	250
	240.0	264.0	110.0	265.8	112.1	270.6	2.1	4.8	3.84%	63379 RUGBY 4 230 - 67523 GLENBOR4 230 ckt 1
	240.0	264.0	107.4	259.7	109.6	264.5	2.2	4.8	3.84%	66438 FORMAN 7 115 - 66454 VALLEYC7 115 ckt 1

%: Percentage of continuous facility rating (Rate A).

Table 4.6 (Cont.): Significantly Affected Facilities - N-1 Contingency Conditions (Without and with 125 MW GI-0503)

MONITORED ELEMENT	RATE A	RATE C	WITHOUT GI-0503		WITH 125 MW GI-0503		CHANGE		TDF	CONTINGENCY
	MVA	MVA	%*	MVA	%*	MVA	%*	MVA		
66236 WATERT1T 345 66529 WATERTN3 345 1	400.0	500.0	105.4	421.4	106.5	426.2	1.1	4.8	3.84%	60130 SPLTRTA3 345 - 66537 WHITE 3 345 ckt 1
	400.0	500.0	105.9	423.8	107.1	428.4	1.2	4.6	3.68%	60126 SPLT RK3 345 - 60130 SPLTRTA3 345 ckt 1
66236 WATERT1T 345 66530 WATERTN4 230 1	400.0	500.0	105.4	421.4	106.5	426.2	1.1	4.8	3.84%	60130 SPLTRTA3 345 - 66537 WHITE 3 345 ckt 1
	400.0	500.0	105.9	423.8	107.1	428.4	1.2	4.6	3.68%	60126 SPLT RK3 345 - 60130 SPLTRTA3 345 ckt 1
66421 WILISTN7 115 67386 TIOGA7 7 115 1	79.7	99.6	112.4	91.2	119.6	97.0	7.2	5.8	4.64%	66413 MEDORA 4 230 - 66425 BELFELD4 230 ckt 1
	79.7	99.6	108.2	88.1	115.2	93.4	7.0	5.3	4.24%	66403 DAWSONC4 230 - 66413 MEDORA 4 230 ckt 1
	79.7	99.6	130.4	105.8	136.9	110.6	6.5	4.8	3.84%	67101 ANTELOP3 345 - 67183 CHAR.CK3 345 ckt 1
	79.7	99.6	100.0	82.1	106.1	86.8	6.1	4.7	3.76%	66408 WATFORD7 115 - 67182 CHAR.CK7 115 ckt 1
	79.7	99.6	103.3	84.4	108.8	88.7	5.5	4.3	3.44%	CHARCKTY
	79.7	99.6	103.3	84.4	108.8	88.7	5.5	4.3	3.44%	67183 CHAR.CK3 345 - 67211 CHARCKTY 345 ckt 1
	79.7	99.6	103.3	84.4	108.8	88.7	5.5	4.3	3.44%	67211 CHARCKTY 345 - 67182 CHAR.CK7 115 ckt 1
	79.7	99.6	108.5	87.2	113.2	91.0	4.7	3.8	3.04%	67104 TIOGA4 4 230 - 67108 LOGAN 4 230 ckt 1
66426 BISMARK4 230 67296 WARD 4 230 1	320.0	352.0	98.4	319.9	100.4	326.6	2.0	6.7	5.36%	105 1
66441 GARRISN4 230 66442 GARRISN7 115 1	133.0	166.0	93.9	124.9	126.0	167.5	32.1	42.6	34.08%	66791 CENTER 3 345 - 67316 COYOTE 3 345 ckt 1
66442 GARRISN7 115 67308 BEULAH 7 115 1	120.0	132.0	83.7	100.5	104.9	131.5	21.2	31.0	24.80%	105 1
	120.0	132.0	80.4	100.9	101.5	127.3	21.1	26.4	21.12%	105 2
66791 CENTER 3 345 66756 SQBUTTE4 230 1	336.0	352.0	103.1	346.5	105.4	354.3	2.3	7.8	6.24%	66791 CENTER 3 345 - 67316 COYOTE 3 345 ckt 1
67104 TIOGA4 4 230 67385 TIOGA4 7 115 1	100.0	125.0	--	--	120.7	120.7	--	--	--	60503 GI0503 7 115 - 503 GI0503 9 34.5 ckt 1
	100.0	125.0	--	--	119.9	119.9	--	--	--	60139 MALLARD7 115 - 60503 GI0503 7 115 ckt 1
	100.0	125.0	109.1	109.1	117.6	117.6	8.5	8.5	6.80%	67106 LELANDO4 230 - 67108 LOGAN 4 230 ckt 1
	100.0	125.0	121.7	121.7	126.9	126.9	5.2	5.2	4.16%	105 3
	100.0	125.0	116.2	116.2	120.9	120.9	4.7	4.7	3.76%	67352 KENMARE7 115 - 67380 STANLEY7 115 ckt 1
	100.0	125.0	128.8	128.8	133.4	133.4	4.6	4.6	3.68%	67155 LOGAN 7 115 - 67261 BTHOLD 7 115 ckt 1
	100.0	125.0	104.5	104.5	109.1	109.1	4.6	4.6	3.68%	67380 STANLEY7 115 - 67385 TIOGA4 7 115 ckt 1
	100.0	125.0	128.0	128.0	132.5	132.5	4.5	4.5	3.60%	67261 BTHOLD 7 115 - 67352 KENMARE7 115 ckt 1
	100.0	125.0	122.8	122.8	126.7	126.7	3.9	3.9	3.12%	60138 SOURIS 7 115 - 60139 MALLARD7 115 ckt 1
	100.0	125.0	120.6	120.6	124.5	124.5	3.9	3.9	3.12%	67541 STVITAL7 110 - 67783 ILEDESC7 110 ckt 1
	100.0	125.0	120.5	120.5	124.4	124.4	3.9	3.9	3.12%	250
	100.0	125.0	120.3	120.3	124.2	124.2	3.9	3.9	3.12%	63369 JAMESTN3 345 - 66791 CENTER 3 345 ckt 1
	100.0	125.0	123.0	123.0	126.8	126.8	3.8	3.8	3.04%	66506 FTTHOMP3 345 - 67105 LELANDO3 345 ckt 1
	100.0	125.0	120.4	120.4	124.2	124.2	3.8	3.8	3.04%	67343 HESKETT7 115 - 67345 HESKET2G 13.8 ckt 1
67296 WARD 4 230 67342 HESKETT4 230 1	320.0	352.0	100.9	328.8	103.0	335.4	2.1	6.6	5.28%	105 1
67308 BEULAH 7 115 67343 HESKETT7 115 1	88.0	88.0	121.6	107.2	127.6	112.2	6.0	5.0	4.00%	66791 CENTER 3 345 - 67316 COYOTE 3 345 ckt 1
67318 COYOTE 7 115 67320 DICKSWH7 115 1	101.4	101.4	133.9	137.0	138.6	141.5	4.7	4.5	3.60%	66791 CENTER 3 345 - 67316 COYOTE 3 345 ckt 1
67326 ELLENDL4 230 67390 G132 230 1	239.0	294.6	--	--	130.3	314.2	--	--	--	60503 GI0503 7 115 - 503 GI0503 9 34.5 ckt 1
	239.0	294.6	129.9	310.5	132.5	318.9	2.6	8.4	6.72%	120
	239.0	294.6	149.4	357.0	152.8	364.0	3.4	7.0	5.60%	63369 JAMESTN3 345 - 66791 CENTER 3 345 ckt 1
	239.0	294.6	140.4	338.7	143.6	345.7	3.2	7.0	5.60%	67105 LELANDO3 345 - 67160 GROTON 3 345 ckt 1
	239.0	294.6	147.3	351.3	150.9	358.1	3.6	6.8	5.44%	220
	239.0	294.6	147.1	350.7	150.5	357.5	3.4	6.8	5.44%	63358 BUFFALO3 345 - 66792 MAPLE R3 345 ckt 1

%: Percentage of continuous facility rating (Rate A).

Table 4.6 (Cont.): Significantly Affected Facilities - N-1 Contingency Conditions (Without and with 125 MW GI-0503)

MONITORED ELEMENT	RATE A	RATE C	WITHOUT GI-0503		WITH 125 MW GI-0503		CHANGE		TDF	CONTINGENCY
	MVA	MVA	%*	MVA	%*	MVA	%*	MVA		
67326 ELLENDL4 230 67390 G132 230 1	239.0	294.6	147.4	351.7	150.8	358.4	3.4	6.7	5.36%	63358 BUFFALO3 345 - 63369 JAMESTN3 345 ckt 1
	239.0	294.6	132.2	318.5	135.3	325.2	3.1	6.7	5.36%	66527 WHITLOK4 230 - 67338 GLENHAM4 230 ckt 1
	239.0	294.6	131.9	318.0	135.0	324.6	3.1	6.6	5.28%	66521 SULLYBT4 230 - 66527 WHITLOK4 230 ckt 1
	239.0	294.6	131.5	317.0	134.5	323.6	3.0	6.6	5.28%	66519 OAHE 4 230 - 66521 SULLYBT4 230 ckt 1
	239.0	294.6	135.4	325.6	138.5	332.2	3.1	6.6	5.28%	66506 FTTHOMP3 345 - 67105 LELANDO3 345 ckt 1
	239.0	294.6	137.1	329.2	140.0	335.7	2.9	6.5	5.20%	67120 BRDLAND3 345 - 67204 BRDLNDTY 345 ckt 1
	239.0	294.6	137.1	329.2	140.0	335.7	2.9	6.5	5.20%	67101 ANTELOP3 345 - 67120 BRDLAND3 345 ckt 1
	239.0	294.6	137.1	329.2	140.0	335.7	2.9	6.5	5.20%	66514 HURON 4 230 - 67205 BRDLAND4 230 ckt 1
	239.0	294.6	137.1	329.2	140.0	335.7	2.9	6.5	5.20%	BRDLNDTY
67327 ELLENDL7 115 67401 ABDNJCT7 115 1	80.0	128.0	171.4	139.0	175.3	144.2	3.9	5.2	4.16%	63362 OAKES 4 230 - 63363 FORMAN 4 230 ckt 1
67385 TIOGA4 7 115 67386 TIOGA7 7 115 1	120.0	132.0	103.0	126.4	107.9	132.3	4.9	5.9	4.72%	66413 MEDORA 4 230 - 66425 BELFELD4 230 ckt 1
	120.0	132.0	100.2	123.3	104.9	128.7	4.7	5.4	4.32%	66403 DAWSONC4 230 - 66413 MEDORA 4 230 ckt 1
	120.0	132.0	115.0	141.1	119.4	146.0	4.4	4.9	3.92%	67101 ANTELOP3 345 - 67183 CHAR.CK3 345 ckt 1
	120.0	132.0	96.8	119.5	100.5	123.8	3.7	4.3	3.44%	67211 CHARCKTY 345 - 67182 CHAR.CK7 115 ckt 1
	120.0	132.0	96.8	119.5	100.5	123.8	3.7	4.3	3.44%	67183 CHAR.CK3 345 - 67211 CHARCKTY 345 ckt 1
	120.0	132.0	96.8	119.5	100.5	123.8	3.7	4.3	3.44%	CHARCKTY

%: Percentage of continuous facility rating (Rate A).

Table 4.7: Significantly Affected Bus Voltages - N-1 Contingency Conditions
(Without and with 125 MW GI-0503)

SUBSTATION			CONTINGENCY	WITHOUT GI-0503	WITH 125 MW GI-0503	CHAN
NUM	NAM	KV		PU	PU	PU
61690	TWO HBR7	115.0	61690 TWO HBR7 115 - 62170 WALDO 7 115 ckt 1	1.0020	1.0589	--
62445	4CORNRS7	115.0	61673 ARROWHD7 115 - 62445 4CORNRS7 115 ckt 1	0.9012	0.8874	-0.0138

Table 4.8: Steady-State Analysis Results with B10T @ 165 MW S>N

Note: Results were screened to show impacts in Max / Mallard Vicinity only. See Appendix F for full results.

CIRCUIT FROM: CIRCUIT TO: CKT	CONTINGENCY		RATEA	WITHOUT GI-0503		WITH GI-0503	
# NAME # NAME	FROM TO CKT	SWITCH	MVA	%	MVA	%	MVA
60139 MALLARD7 115 66449 MAX 7 115 1	SYSTEM INTACT		120.0	60.1	72.2		
	67106 LELANDO4 230 67108 LOGAN 4 230 1			112.6	135.1		
	LELANDO-LOGAN 230 W/ B10T LIMITED TO 75 N			94.4	113.3		
60139 MALLARD7 115 60503 GI0503 7 115 1	SYSTEM INTACT		120.0			112.3	134.7
	67106 LELANDO4 230 67108 LOGAN 4 230 1					158.7	190.5
	LELANDO-LOGAN 230 W/ B10T LIMITED TO 75 N					140.6	168.7
	66441 GARRISN4 230 67106 LELANDO4 230 1	SW107				132.4	158.9
	66791 CENTER 3 345 67316 COYOTE 3 345 1					130.1	156.1
	66442 GARRISN7 115 67113 VOLTAIR7 115 1					125.8	150.9
	66441 GARRISN4 230 66442 GARRISN7 115 1					122.9	147.5
	66442 GARRISN7 115 67308 BEULAH 7 115 1					120.4	144.5
	66441 GARRISN4 230 66444 JAMESTN4 230 1					118.8	142.6
	66426 BISMARK4 230 67283 WILTTAP4 230 1					118.1	141.7
	66441 GARRISN4 230 67283 WILTTAP4 230 1					118.1	141.7
	63369 JAMESTN3 345 66791 CENTER 3 345 1					117.2	140.6
	66426 BISMARK4 230 66456 WASHBRN4 230 1	SW106				117.0	140.4
	66456 WASHBRN4 230 67106 LELANDO4 230 1	SW106				117.0	140.4
	63358 BUFFALO3 345 63369 JAMESTN3 345 1					116.9	140.3
	63044 MCHENRY4 230 63056 BALTA 4 230 1	SW117				116.8	140.2
	63358 BUFFALO3 345 66792 MAPLE R3 345 1					116.8	140.2
60503 GI0503 7 115 66449 MAX 7 115 1	SYSTEM INTACT		120.0			14.2	17.0
	60139 MALLARD7 115 60503 GI0503 7 115 1					102.2	122.7
60139 MALLARD7 115 67155 LOGAN 7 115 1	SYSTEM INTACT		159.0	9.2	14.7	30.0	47.7
	67106 LELANDO4 230 67108 LOGAN 4 230 1			121.2	192.8	126.9	201.8
	LELANDO-LOGAN 230 W/ B10T LIMITED TO 75 N			74.5	118.5	82.3	130.8
66441 GARRISN4 230 66442 GARRISN7 115 1	SYSTEM INTACT		133.0			38.7	51.5
	60139 MALLARD7 115 60503 GI0503 7 115 1					90.1	119.9
	66791 CENTER 3 345 67316 COYOTE 3 345 1					103.2	137.3
66442 GARRISN7 115 66449 MAX 7 115 1	SYSTEM INTACT		120.0	65.2	78.2	19.4	23.3
	60139 MALLARD7 115 60503 GI0503 7 115 1					97.8	117.3
	67106 LELANDO4 230 67108 LOGAN 4 230 1			118.1	141.7		
66442 GARRISN7 115 67308 BEULAH 7 115 1	SYSTEM INTACT		120.0			51.3	61.6
	66441 GARRISN4 230 67106 LELANDO4 230 1	SW107				91.7	110.0

Table 4.9: Voltage Results with B10T @ 165 MW S>N

UNDERVOLTAGE						
			WITHOUT GI-0503		WITH GI-0503	
SUBSTATION	CONTINGENCY PERFORMED		VOLTAGE	DROP	VOLTAGE	DROP
# NAME	FROM TO CKT	SWITCH	%	%	%	%
63044 MCHENRY4 230	SYSTEM INTACT		100.6		100.5	
	63044 MCHENRY4 230 63056 BALTA 4 230 1	SW117	87.5	13.1	87.4	13.1
66408 WATFORD7 115	SYSTEM INTACT		100.7		100.8	
	67104 TIOGA4 4 230 67108 LOGAN 4 230 1		89.0	11.7	88.8	12.0
66421 WILISTN7 115	SYSTEM INTACT		101.0		101.1	
	67104 TIOGA4 4 230 67108 LOGAN 4 230 1		85.1	15.9	84.7	16.4
67104 TIOGA4 4 230	SYSTEM INTACT				101.9	
	67104 TIOGA4 4 230 67108 LOGAN 4 230 1				89.7	12.2
67145 GRENORA7 115	SYSTEM INTACT		98.9		99.0	
	67104 TIOGA4 4 230 67108 LOGAN 4 230 1		85.1	13.7	84.7	14.2
67146 PLNTYWD7 115	SYSTEM INTACT		98.2		98.3	
	67104 TIOGA4 4 230 67108 LOGAN 4 230 1		85.4	12.8	85.0	13.4
67189 INDNHLS7 115	SYSTEM INTACT		100.6		100.7	
	67104 TIOGA4 4 230 67108 LOGAN 4 230 1		85.3	15.3	85.0	15.7
67261 BTHOLD 7 115	SYSTEM INTACT		100.9		100.7	
	67104 TIOGA4 4 230 67108 LOGAN 4 230 1		82.5	18.4	81.2	19.5
67312 CLBRTSN7 115	SYSTEM INTACT		99.9		100.0	
	67104 TIOGA4 4 230 67108 LOGAN 4 230 1		87.8	12.1	87.7	12.3
67352 KENMARE7 115	SYSTEM INTACT		100.8		100.7	
	67104 TIOGA4 4 230 67108 LOGAN 4 230 1		76.3	24.5	74.3	26.4
67380 STANLEY7 115	SYSTEM INTACT		100.9		100.9	
	67104 TIOGA4 4 230 67108 LOGAN 4 230 1		76.4	24.5	74.5	26.4
67385 TIOGA4 7 115	SYSTEM INTACT		102.1		102.2	
	67104 TIOGA4 4 230 67108 LOGAN 4 230 1		81.0	21.1	79.6	22.6
67386 TIOGA7 7 115	SYSTEM INTACT		102.0		102.1	
	67104 TIOGA4 4 230 67108 LOGAN 4 230 1		80.6	21.4	79.3	22.8
OVERVOLTAGE						
			WITHOUT GI-0503		WITH GI-0503	
SUBSTATION	CONTINGENCY PERFORMED		VOLTAGE	RISE	VOLTAGE	RISE
# NAME	FROM TO CKT	SWITCH	%	%	%	%
60172 SHYSWCP7 115	SYSTEM INTACT		106.55		106.28	
63216 ORTONVL7 115	SYSTEM INTACT		105.02		105	
63222 ALEXAND7 115	SYSTEM INTACT		105.34		105.19	
66705 DRAYTON7 115	SYSTEM INTACT		105.59		105.44	
66788 DRAYTO2T 230	SYSTEM INTACT		105.92		105.76	
67452 ALEXSS 7 115	SYSTEM INTACT		105.7		105.54	
	62752 MLTN TP7 115 67454 ALEXPLDM 115 1		110.04	4.35		
	63222 ALEXAND7 115 67452 ALEXSS 7 115 1		113	7.3	112.9	7.36
67453 ALEXSWM7 115	SYSTEM INTACT		105.7		105.55	
	62752 MLTN TP7 115 67454 ALEXPLDM 115 1		110.11	4.41		
	63222 ALEXAND7 115 67452 ALEXSS 7 115 1		112.97	7.27	112.87	7.33
67454 ALEXPLDM 115	SYSTEM INTACT		105.89		105.73	
	62752 MLTN TP7 115 67454 ALEXPLDM 115 1		111.11	5.23	110.96	5.23
	63222 ALEXAND7 115 67452 ALEXSS 7 115 1		112.75	6.86	112.65	6.93
67461 ALEXNOKO 115	SYSTEM INTACT		105.23		105.08	

Table 4.10: Prior-Queued Projects Modeled in the Pre-Project Power Flow Case (Case k00-sp15aa.sav)

Project	Name	Prime Mover	Net MW	Status (ON/OFF)
GI-0101a	RCDC	-	200	ON
GI-0208	Edgeley (BEPC)	Wind	40	ON
GI-0209	Ft. Thompson	Wind	40	ON
GI-0316	Groton CT	Gas	120	ON
G256	Glendive #2	Gas	45	ON
G291	Edgeley	Wind	19	ON
G248	Dickey	Wind	19	ON
G370	Anson #4	Gas	205	ON
G359	Dickey	Wind	150	ON
G438	Marshall	Wind	19.5	ON
G408	McHenry	Wind	12	ON
G132	Ellendale	Wind	180	ON
G297	Glenham	Wind	39	ON
G380	Rugby	Wind	150	ON
TI-0301	Brookings Co. - White Interconnection	-	-	ON
G255	Yankee	Wind	200	ON
G311	Gascoyne	Wind	19	ON
GI-0108	White	Wind	200	ON
G392	Big Stone 2	Coal	600	ON
GI-0217	Belfield	Coal	500	OFF (Withdrawn)
GI-0402	Big Stone / Grant	Coal	200	OFF
GI-0403	Big Stone / Grant	Coal	75	OFF
GI-0303	Brookings (White 115)	Wind	170	ON
GI-0321	Leland Olds 3	Coal	500	OFF
GI-0508	Wilton	Wind	50	ON
GI-0503	Minot	Wind	100	OFF

Table 4.11: Significantly Affected Facilities - System Intact Conditions
(Out-Year Analysis Without and with 125 MW GI-0503)

MONITORED ELEMENT	RATE A	WITHOUT GI-0503		WITH 125 MW GI-0503		CHANGE		TDF
	MVA	%	MVA	%	MVA	%	MVA	
60139 MALLARD7 115 60503 GI0503 7 115 1	120	--	--	124.9	148.1	--	--	--

Table 4.12: Significantly Affected Facilities - N-1 Contingency Conditions
(Out-Year Analysis Without and with 125 MW GI-0503)

MONITORED ELEMENT	RATE A	RATE C	WITHOUT GI-0503		WITH GI-0503		CHANGE		TDF	CONTINGENCY
	MVA	MVA	%	MVA	%	MVA	%	MVA		
60133 SHEYNNE4 230 66435 FARGO 4 230 1	391.0	391.0	97.7	369.7	100.7	375.8	3.0	6.1	4.88%	63358 BUFFALO3 345 - 63369 JAMESTN3 345 ckt 1
	391.0	391.0	107.2	392.2	110.6	396.1	3.4	3.9	3.12%	63369 JAMESTN3 345 - 66791 CENTER 3 345 ckt 1
60139 MALLARD7 115 60503 GI0503 7 115 1	120.0	132.0	--	--	167.9	192.9	--	--	--	67106 LELANDO4 230 - 67108 LOGAN 4 230 ckt 1
	120.0	132.0	--	--	142.6	174.5	--	--	--	66791 CENTER 3 345 - 67316 COYOTE 3 345 ckt 1
	120.0	132.0	--	--	141.4	173.1	--	--	--	66442 GARRISN7 115 - 67113 VOLTAIR7 115 ckt 1
	120.0	132.0	--	--	139.3	170.5	--	--	--	105 2
	120.0	132.0	--	--	133.7	158.1	--	--	--	66442 GARRISN7 115 - 67308 BEULAH 7 115 ckt 1
	120.0	132.0	--	--	133.0	154.7	--	--	--	63369 JAMESTN3 345 - 66791 CENTER 3 345 ckt 1
	120.0	132.0	--	--	132.7	154.2	--	--	--	260
	120.0	132.0	--	--	132.5	156.8	--	--	--	66426 BISMARK4 230 - 67283 WILTTAP4 230 ckt 1
	120.0	132.0	--	--	132.1	154.2	--	--	--	67990 CHAR.CK4 230 - 67991 WATFORD4 230 ckt 1
	120.0	132.0	--	--	132.0	154.3	--	--	--	67183 CHAR.CK3 345 - 67990 CHAR.CK4 230 ckt 1
	120.0	132.0	--	--	131.7	155.7	--	--	--	105 1
	120.0	132.0	--	--	131.7	154.9	--	--	--	180 1
	120.0	132.0	--	--	131.4	155.6	--	--	--	66441 GARRISN4 230 - 66444 JAMESTN4 230 ckt 1
	120.0	132.0	--	--	131.4	153.5	--	--	--	220
	120.0	132.0	--	--	131.3	153.5	--	--	--	67991 WATFORD4 230 - 67992 INDNHLS4 230 ckt 1
60503 GI0503 7 115 66449 MAX 7 115 1	120.0	132.0	--	--	102.2	125.1	--	--	--	60139 MALLARD7 115 - 60503 GI0503 7 115 ckt 1
60139 MALLARD7 115 67155 LOGAN 7 115 1	159.0	159.0	106.4	158.6	112.1	170.7	5.7	12.1	9.68%	67106 LELANDO4 230 - 67108 LOGAN 4 230 ckt 1
60150 MNVLTAP4 230 66550 GRANITF4 230 1	336.0	370.0	101.0	339.4	103.4	347.3	2.4	7.9	6.32%	500
	336.0	370.0	98.5	325.7	100.1	333.3	1.6	7.6	6.08%	60108 WILMART3 345 - 60331 LKFLDXL3 345 ckt 1
	336.0	370.0	100.9	338.9	103.2	346.4	2.3	7.5	6.00%	63050 WILLMAR4 230 - 66550 GRANITF4 230 ckt 1
60156 PYNSVIL7 115 60760 PAYNES 8 69 1	47.0	61.1	122.6	57.6	135.6	63.7	13.0	6.1	4.88%	60156 PYNSVIL7 115 - 60760 PAYNES 8 69 ckt 2
60156 PYNSVIL7 115 60760 PAYNES 8 69 2	47.0	61.1	122.1	57.4	135.1	63.5	13.0	6.1	4.88%	60156 PYNSVIL7 115 - 60760 PAYNES 8 69 ckt 1
66442 GARRISN7 115 66461 GARISN5G 13.8 1	104.0	125.0	98.3	102.3	104.2	108.3	5.9	6.0	4.80%	60139 MALLARD7 115 - 60503 GI0503 7 115 ckt 1
66442 GARRISN7 115 67113 VOLTAIR7 115 1	109.0	109.0	90.3	102.9	105.0	119.7	14.7	16.8	13.44%	60139 MALLARD7 115 - 60503 GI0503 7 115 ckt 1
66442 GARRISN7 115 67308 BEULAH 7 115 1	120.0	132.0	89.9	106.4	102.7	121.5	12.8	15.1	12.08%	67101 ANTELOP3 345 - 67183 CHAR.CK3 345 ckt 1
66560 CRESTON5 161 66569 CRESTON8 69 1	56.0	70.0	96.6	54.1	106.1	59.4	9.5	5.3	4.24%	60160 SHERCO 3 345 - 60000 SHERC31G 24 ckt 1
67104 TIOGA4 4 230 67108 LOGAN 4 230 1	240.0	264.0	100.2	229.5	101.5	234.9	1.3	5.4	4.32%	67380 STANLEY7 115 - 67385 TIOGA4 7 115 ckt 1
	240.0	264.0	100.5	231.2	100.2	236.4	-0.3	5.2	4.16%	66442 GARRISN7 115 - 66449 MAX 7 115 ckt 1
	240.0	264.0	114.2	266.6	115.8	271.8	1.6	5.2	4.16%	67352 KENMARE7 115 - 67380 STANLEY7 115 ckt 1
	240.0	264.0	121.4	281.6	123.0	286.7	1.6	5.1	4.08%	67155 LOGAN 7 115 - 67261 BTHOLD 7 115 ckt 1
	240.0	264.0	120.9	280.8	122.5	285.9	1.6	5.1	4.08%	67261 BTHOLD 7 115 - 67352 KENMARE7 115 ckt 1
	240.0	264.0	100.5	235.6	102.1	240.6	1.6	5.0	4.00%	63379 RUGBY 4 230 - 67523 GLENBOR4 230 ckt 1
	240.0	264.0	100.8	232.2	101.8	237.1	1.0	4.9	3.92%	260

Table 4.12 (Cont.): Significantly Affected Facilities - N-1 Contingency Conditions
(Out-Year Analysis Without and with 125 MW GI-0503)

MONITORED ELEMENT	RATE A	RATE C	WITHOUT GI-0503		WITH GI-0503		CHANGE		TDF	CONTINGENCY
	MVA	MVA	%	MVA	%	MVA	%	MVA		
67104 TIOGA4 4 230 67108 LOGAN 4 230 1	240.0	264.0	101.2	236.5	102.5	241.3	1.3	4.8	3.84%	60139 MALLARD7 115 - 66452 RUGBY 7 115 ckt 1
	240.0	264.0	137.4	302.1	137.4	306.9	0.0	4.8	3.84%	67101 ANTELOP3 345 - 67183 CHAR.CK3 345 ckt 1
	240.0	264.0	105.7	243.7	107.2	248.4	1.5	4.7	3.76%	63369 JAMESTN3 345 - 66791 CENTER 3 345 ckt 1
	240.0	264.0	99.7	231.0	100.8	235.7	1.1	4.7	3.76%	MCHENRY T1
	240.0	264.0	99.8	231.0	100.8	235.7	1.0	4.7	3.76%	60140 MCHENRY7 115 - 63082 MCHENRYY 1 ckt 1
	240.0	264.0	100.5	237.7	102.2	242.2	1.7	4.5	3.60%	60138 SOURIS 7 115 - 60139 MALLARD7 115 ckt 1
	240.0	264.0	100.7	236.2	102.1	240.7	1.4	4.5	3.60%	67510 GR.RPDS4 230 - 67677 GRAMPG#4 13.8 ckt 1
	240.0	264.0	100.7	236.2	102.1	240.7	1.4	4.5	3.60%	67510 GR.RPDS4 230 - 67691 GRSTCG#2 13.8 ckt 1
67155 LOGAN 7 115 67261 BTHOLD 7 115 1	80.0	88.0	166.2	114.3	175.7	118.6	9.5	4.3	3.44%	67104 TIOGA4 4 230 - 67108 LOGAN 4 230 ckt 1
67261 BTHOLD 7 115 67352 KENMARE7 115 1	80.0	88.0	164.8	113.3	174.3	117.6	9.5	4.3	3.44%	67104 TIOGA4 4 230 - 67108 LOGAN 4 230 ckt 1
67308 BEULAH 7 115 67343 HESKETT7 115 1	88.0	88.0	119.1	104.3	125.2	109.5	6.1	5.2	4.16%	66791 CENTER 3 345 - 67316 COYOTE 3 345 ckt 1
67318 COYOTE 7 115 67320 DICKSWH7 115 1	101.4	101.4	115.4	103.1	116.0	116.8	0.6	13.7	10.96%	67101 ANTELOP3 345 - 67183 CHAR.CK3 345 ckt 1
	101.4	101.4	134.0	136.3	138.4	140.6	4.4	4.3	3.44%	66791 CENTER 3 345 - 67316 COYOTE 3 345 ckt 1

Table 4.13: Significantly Affected Bus Voltages - N-1 Contingency Conditions
(Out-Year Analysis Without and with 125 MW GI-0503)

High Voltage Violations

SUBSTATION			CONTINGENCY	WITHOUT GI-0503	WITH GI-0503	CHANGE
NUM	NAM	KV		PU	PU	PU
67556	WHTSL1 4	220	726L	1.0952	1.1053	0.0101
67556	WHTSL1 4	220	61752 I.FALLS7 118 - 61784 INTPHAS7 118 ckt 1	1.0953	1.1054	0.0101
67589	WHTSL2 4	220	726L	1.0952	1.1053	0.0101
67589	WHTSL2 4	220	61752 I.FALLS7 118 - 61784 INTPHAS7 118 ckt 1	1.0952	1.1054	0.0102

Low Voltage Violations

SUBSTATION			CONTINGENCY	WITHOUT GI-0503	WITH GI-0503	CHANGE
NUM	NAM	KV		PU	PU	PU
67755	SHBK-PH7	110	67580 SHERBK 7 110 - 67755 SHBK-PH7 110 ckt 1	0.9106	0.8991	-0.0115
67261	BTHOLD 7	115	67104 TIOGA4 4 230 - 67108 LOGAN 4 230 ckt 1	0.8593	0.8437	-0.0156
67352	KENMARE7	115	67104 TIOGA4 4 230 - 67108 LOGAN 4 230 ckt 1	0.8191	0.7965	-0.0226
67380	STANLEY7	115	67104 TIOGA4 4 230 - 67108 LOGAN 4 230 ckt 1	0.8299	0.8086	-0.0213
67385	TIOGA4 7	115	67104 TIOGA4 4 230 - 67108 LOGAN 4 230 ckt 1	0.9048	0.8892	-0.0156
67386	TIOGA7 7	115	67104 TIOGA4 4 230 - 67108 LOGAN 4 230 ckt 1	0.8999	0.8844	-0.0155
67995	T3TIOGA7	115	67104 TIOGA4 4 230 - 67108 LOGAN 4 230 ckt 1	0.9048	0.8892	-0.0156

Table 4.14: Significantly Affected Facilities - N-1 Contingency Conditions with B10T Phase Shifter Locked
(Out-Year Williston - Tioga 230 kV Line Sensitivity Analysis without and with 125 MW GI-0503)

Thermal Violations

MONITORED ELEMENT	CONTINGENCY	RATE A	RATE C	WITHOUT GI-0503		WITH 100 MW GI-0503		WITH 125 MW GI-0305	
		MVA	MVA	%	MVA	%	MVA	%	MVA
60139 MALLARD7 115 66449 MAX 7 115 1	67106 LELANDO4 230 - 67108 LOGAN 4 230 ckt 1	120.0	132.0	109.9	130.7	--	--	--	--
60139 MALLARD7 115 60503 GI0503 7 115 1	67106 LELANDO4 230 - 67108 LOGAN 4 230 ckt 1	120.0	132.0	--	--	149.7	182.0	159.1	194.1
60139 MALLARD7 115 67155 LOGAN 7 115 1	67106 LELANDO4 230 - 67108 LOGAN 4 230 ckt 1	159.0	159.0	81.7	125.3	92.6	143.9	95.3	148.1

Note:

1. Overloads percentages are expressed on the Rate A rating.
2. B10T Shifter is locked following

   Contingency on the Leland Olds - Logan 230 kV line

   Contingency on the Tioga - Logan 230 kV line

Table 4.15: Significantly Affected Facilities - N-1 Contingency Conditions with B10T Flow Reduced Based on Operation Guide (Out-Year Williston - Tioga 230 kV Line Sensitivity Analysis without and with 125 MW GI-0503)

Thermal Violations

MONITORED ELEMENT	CONTINGENCY	RATE A	RATE C	WITHOUT GI-0503		WITH 100 MW GI-0503		WITH 125 MW GI-0305	
		MVA	MVA	%	MVA	%	MVA	%	MVA
60139 MALLARD7 115 66449 MAX 7 115 1	67106 LELANDO4 230 - 67108 LOGAN 4 230 ckt 1	120.0	132.0	103.1	123.5	--	--	--	--
60139 MALLARD7 115 60503 GI0503 7 115 1	67106 LELANDO4 230 - 67108 LOGAN 4 230 ckt 1	120.0	132.0	--	--	142.0	174.4	151.5	185.4
60139 MALLARD7 115 67155 LOGAN 7 115 1	67106 LELANDO4 230 - 67108 LOGAN 4 230 ckt 1	159.0	159.0	60.6	96.3	76.8	121.1	79.4	124.7

Note:

1. Overloads percentages are expressed on the Rate A rating.
2. Per the B10T Operating Guide, the following schedules were assumed on the Boundary Dam - Tioga 230 kV line:
   B10T set to 75 MW North for the loss of Leland Olds - Logan 230 kV line
   B10T set to 50 MW North for the loss of Logan - Tioga 230 kV line

5. CONSTRAINED INTERFACE ANALYSIS

Experience with operating the MAPP system indicates there are a number of stability and steady-state limitations that frequently constrain the operation of the system. For convenience purposes, these limitations have been expressed in terms of PTDF (flows are measured under system intact conditions) and OTDF (flows are measured after a specified contingencies) flowgates. Operation of the system is limited so that power flows through these flowgates does not exceed their respective prescribed limits.

The intent of this analysis is to calculate the impact of the proposed GI-0503 Wind Farm on the MAPP flowgates. All PTDF and OTDF flowgates monitored by MAPP were investigated. The emphasis, however, was not on the actual value of flows through those flowgates, but instead on the impact (distribution factor) the proposed GI-0503 Wind Farm would have on those flowgates. Thus the results are less dependent on the assumptions used in developing the base cases, and more a consequence of the network topology between the proposed plant and the assumed sink.

The analysis was performed using the following cases:

1. Case *e00-sp09aa.sav (e00)*: 2009 summer peak case without GI-0503 (see Section 4.1)
2. Case *e03-sp09aa.sav (e03)*: 2009 summer peak case with GI-0503 at 100MW. This case is the same as case *e01-sp09aa.sav* (See Section 4.1) but with GI-0503 dispatched against generation at AVS (instead of MAIN load). In this case, the GI-0503 plant is dispatched as a Network Resource.

The DFCALC IPLAN program included in the NMORWG Study Package was used for this analysis.

Table_5.1 shows the interface flows in the cases without and with the GI-0503 project. The tables also show the transfer distribution factor (in percent) for the 100 MW power transfer from the proposed project to the sink. As new interfaces are regularly added to the MAPP process, this listing may not include any recently added flowgates.

It can be seen that the proposed project doesn't adversely impact[**] any interface.

[**] As per MAPP Design Review Subcommittee criteria (see MAPP DRS document entitled "*Steady-State Facility & Constrained Path Impact Determination Requirements & Screening Guidelines for Study Submissions",* June 2007 version), the minimum PTDF threshold for MAPP PTDF Interfaces is 5% and the minimum MW impact threshold is 1 MW. PTDF Interfaces that have PTDFs >= 5% -and- a MW impact >= minimum MW impact threshold are considered significantly impacted.

The DFCALC outputs are included in Appendix E.

The analysis was repeated for the out-year scenario (2015 summer peak) based on the cases described in Section 4.7:

1. Case *k60-sp15aa.sav (k60):* 2015 summer peak case without GI-0503 (see Section4.7)
2. Case *k64-sp15aa.sav (k64):* 2015 summer peak case with GI-0503 at 125MW. This case is the same as case *k62-sp15aa.sav* (See Section 4.7) but with GI-0503 dispatched against generation at AVS (instead of MAIN load).

Results are shown in Table 5.2. As before, no adverse impacts are noted.

For OTDF Interfaces, the minimum OTDF threshold is 3% and the minimum impact threshold is 1 MW. OTDF Interfaces that have OTDFs >= 3% -and- a MW impact >= minimum MW impact threshold are considered significantly impacted.

Table 5.1: Constrained Interface Analysis Results – Sink to AVS Generation (Without and With GI-0503); Near Term Scenario

INTERFACE	WITHOUT GI-0503	WITH GI-0503	CHANGE	TDF
	(MW)	(MW)	(MW)	(%)
PTDF INTERFACES				
COOPER_S	552.1	551.1	-1.0	-1.0
EAUARP__XCEL	520.2	520.5	0.3	0.3
FORCHS_PTDF	800.2	804.3	4.1	4.1
FTCAL_S	400.3	399.9	-0.4	-0.4
GGS	1381.8	1381.4	-0.4	-0.4
GRIS_LNC	230.3	229.0	-1.3	-1.3
LEECONELS	262.9	263.2	0.3	0.3
MHEX_N+	-1357.3	-1359.6	-2.3	-2.3
MHEX_S+	1380.8	1383.4	2.6	2.6
MH_SPC_E+	-227.1	-224.1	3.0	3.0
MH_SPC_W+	230.2	227.2	-3.0	-3.0
MNTZUMA_W	-137.7	-136.8	0.9	0.9
MWSI	871.1	872.4	1.3	1.3
NDDC	-3.8	-3.8	0.0	0.0
NDEX	1259.5	1254.4	-5.1	-5.1
PR_ISL_BYRON	351.0	351.9	0.9	0.9
QUADCITY_W	647.7	648.2	0.5	0.5
WNE_WKS	353.4	353.1	-0.3	-0.3
Y2DC	-1.7	-1.7	0.0	0.0
AHD_GPK	388.5	389.0	0.5	0.5
OTDF INTERFACES				
ALBGARQUAST	81.2	81.2	0.0	0.0
ARNVINARNHAZ	74.9	74.9	0.0	0.0
BYCHEBYCHE	1439.7	1439.5	-0.2	-0.2
DAVCALQUARCK	0.0	0.0	0.0	0.0
HLSXFMTIFARN	71.2	71.1	-0.1	-0.1
LACWGRLACSTI	966.7	967.0	0.3	0.3
LEEBYREJNEL	769.0	768.6	-0.4	-0.4
LKFFOXLKGWLM	45.0	44.7	-0.3	-0.3
LORTRKWEMPAD	97.3	97.1	-0.2	-0.2
PADXFMPADROE	0.0	0.0	0.0	0.0
POWREAMTZBON	-28.1	-27.8	0.3	0.3
S1226TEKAMAH	-4.2	-3.9	0.3	0.3
SALXFMQUADAV	258.7	258.7	0.0	0.0
SALXFMWEMPAD	241.7	241.6	-0.1	-0.1
SPETRILAKRAU	-98.9	-99.1	-0.2	-0.2
SPHWMCSUMEMC	-13.6	-13.5	0.1	0.1

Table 5.2: Constrained Interface Analysis Results – Sink to AVS Generation (Without and With GI-0503); Out-Year Scenario

INTERFACE	WITHOUT GI-0503 (MW)	WITH GI-0503 (MW)	CHANGE (MW)	TDF (%)
PTDF INTERFACES				
COOPER_S	-198.0	-198.9	-1.0	-0.8
EAUARP__XCEL	-53.7	-53.2	0.5	0.4
FORCHS_PTDF	697.3	702.1	4.8	3.8
FTCAL_S	-60.1	-60.5	-0.3	-0.3
GGS	1280.1	1279.9	-0.3	-0.2
GRIS_LNC	40.6	39.0	-1.7	-1.3
LEECONELS	391.8	392.2	0.4	0.3
MHEX_N+	-1244.6	-1245.9	-1.4	-1.1
MHEX_S+	1262.1	1263.6	1.5	1.2
MH_SPC_E+	-226.8	-225.0	1.8	1.5
MH_SPC_W+	230.3	228.4	-1.9	-1.5
MNTZUMA_W	228.5	229.6	1.1	0.9
MWSI	-336.0	-334.2	1.8	1.5
NDDC	-3.8	-3.8	0.0	0.0
NDEX	358.0	354.5	-3.5	-2.8
PR_ISL_BYRON	-282.3	-281.0	1.3	1.1
QUADCITY_W	1120.8	1121.5	0.7	0.6
WNE_WKS	181.5	181.1	-0.4	-0.3
Y2DC	-1.7	-1.7	0.0	0.0
AHD_GPK	112.7	113.5	0.8	0.6
OTDF INTERFACES				
ALBGARQUAST	5.5	5.4	0.0	0.0
ARNVINARNHAZ	270.6	270.5	-0.1	0.0
BYCHEBYCHE	1269.8	1269.7	-0.1	-0.1
DAVCALQUARCK	0.0	0.0	0.0	0.0
HLSXFMTIFARN	215.0	214.9	-0.1	-0.1
LACWGRLACSTI	1211.0	1211.2	0.2	0.2
LEEBYREJNEL	453.0	452.5	-0.5	-0.4
LKFFOXLKGWLM	76.4	76.0	-0.4	-0.3
LORTRKWEMPAD	171.1	170.9	-0.2	-0.2
PADXFMPADROE	0.0	0.0	0.0	0.0
POWREAMTZBON	123.7	124.0	0.4	0.3
S1226TEKAMAH	171.1	171.3	0.2	0.1
SALXFMQUADAV	402.7	402.6	-0.1	0.0
SALXFMWEMPAD	368.9	368.8	-0.1	-0.1
SPETRILAKRAU	33.1	32.8	-0.3	-0.2
SPHWMCSUMEMC	5.7	5.8	0.1	0.0

6. SHORT CIRCUIT ANALYSIS

6.1 Base Case Development

The pre-project model required for this analysis is short-circuit case *c5Esc-nordags.sav* included in the NORDAGS Study Package.

Starting from this case, post-project case was developed by adding the proposed 100 MW GI-0503 project. Suitable assumptions were made for the sequence data required for the wind farm addition.

6.2 Short-Circuit Calculations

Short-circuit calculations were performed to determine the impact of the proposed project on substation fault current levels. Three-phase and single-line-to-ground (SLG) symmetrical fault current levels were calculated at all study area buses rated 69 kV and above, both without and with the proposed project. In order to calculate fault current levels, classical fault assumptions were used with a pre-fault voltage of 1.0 p.u.

Table 6.1 lists the three-phase and SLG fault current levels at those substations where the fault current levels increase by 100 A or more. The highest of these fault currents was compared against the lowest rated circuit breaker at each of these substations to determine whether or not the circuit breaker may be overstressed.

Breaker ratings were not available for the impacted substations. When this information does become available, the calculated fault currents should be compared against the breaker ratings in order to determine whether existing breakers at these substations could become overstressed and whether breaker replacements may be required.

A sensitivity analysis was performed with the following North Dakota load growth transmission facilities added to the pre- and post-project short-circuit cases to check whether there might be short-circuit concerns:

- Add Rhame 230 kV substation and Belfield – Rhame 230 kV line
- Add Charlie Creek-Williston 230 kV line and new 115 kV line from Tioga Jct. – Tioga 115
- Upgrade MDU's Tioga-Tioga Jct. line to 159 MVA
- Add Williston-Tioga 230 kV line

Results are shown in Table 6.2.

As before, the calculated fault currents should be compared against the minimum breaker ratings when this information becomes available.

Table 6.1: Fault Currents Without and With Proposed 100 MW GI-0503 Wind Farm (Near-Term Scenario)

BUS			MIN. BREAKER	FAULT CURRENT (AMP)					
NO.	NAME	kV	RATING	WITHOUT GI-0503		WITH 100 MW GI-0503		CHANGE	
			AMP	3-PH	SLG	3-PH	SLG	3-PH	SLG
60138	SOURIS 7	115.0		5565.7	3927.7	5745.4	3985.2	179.7	57.5
60139	MALLARD7	115.0		6727.9	4839.1	7046.3	4944.8	318.4	105.7
66442	GARRISN7	115.0		10852.5	12595.1	11124.2	12817.2	271.7	222.1
66449	MAX 7	115.0		4533.4	3050.4	5040.8	3192.4	507.4	142.0
67155	LOGAN 7	115.0		6849.3	5130.7	7030.7	5196.6	181.4	65.9

Table 6.2: Fault Currents Without and With Proposed 125 MW GI-0503 Wind Farm (Sensitivity Analysis with North Dakota Load Growth Transmission Facilities)

BUS			MIN. BREAKER	FAULT CURRENT (AMP)					
NO.	NAME	kV	RATING	WITHOUT GI-0503		WITH 125 MW GI-0503		CHANGE	
			(AMP)	3-PH	SLG	3-PH	SLG	3-PH	SLG
60138	SOURIS 7	115		5611.6	3950.9	5818.6	4016.8	207.0	65.9
60139	MALLARD7	115		6811.4	4885.0	7182.2	5006.9	370.8	121.9
66442	GARRISN7	115		10857.1	12598.9	11170.5	12854.9	313.4	256.0
66449	MAX 7	115		4541.9	3054.1	5136.4	3218.6	594.5	164.5
67155	LOGAN 7	115		7008.3	5229.9	7219.3	5305.8	211.0	75.9
67216	AVSDC5TY	345	40000	32273.3	2907.9	32377.0	2908.5	103.7	0.6

7. CONCLUSIONS

The impact of interconnecting the proposed Minot Wind Farm on the Mallard – Max 115 kV line in Ward County, ND has been evaluated. This system impact study includes system performance evaluation based on stability, steady-state, and short-circuit analyses. Analysis was performed with the proposed wind farm modeled at 100 MW. Additional sensitivities were performed with Minot Wind at 125 MW.

The following is a summary of study results:

Stability Analysis:
The impact of the proposed wind farm on local area and regional stability performance was evaluated. Results indicate that the proposed wind farm (whether at 100 MW or at 125 MW) would not adversely impact local area stability.

For regional contingencies, transient voltage violations were observed at Jamestown 345 following fault *fd3* (5 cycle 3-phase fault on Square Butte-Stanton 230 kV line) both without and with the proposed wind farm. The impact of the proposed wind farm on the minimum transient voltages at Jamestown is 1% (i.e., there is a 1% degradation in the transient voltages). The pre-project *fd3* violations are a known issue. One possible solution that has been proposed by area transmission owners is to reduce the *fd3* fault clearing time from 5 cycles to 4 cycles by replacing the existing breakers at Square Butte 230 on the Stanton line with faster two-cycle breakers. Fault *fd3* was tested with the 4 cycle fault clearing time and no pre- and post-project criteria violations were found.

Fault *nmz* (fault on Chisago - Forbes 500 kV line) resulted in transient voltage violations at Arrowhead 230 kV, both before and after the addition of the proposed wind farm. The impact of the proposed wind farm on the transient voltages following these faults is insignificant (less than 0.01 pu). Sensitivity analysis shows transient voltage violations resulted by fault *nmz* are sensitive to flows on the F601C line. With F601C at 1765 MW, post-project *nmz* fault performance is acceptable and meets NMORWG stability criteria.

Steady-State Analysis:
The interconnection of the proposed GI-503 wind farm impacted several transmission facilities and resulted in steady-state criteria violations based upon the modeled delivery of the generator's output.

Worst case steady-state analysis was done with B10T at 165 MW North and Minot Wind at 125 MW. Analysis was performed both for a near-term case (2009 timeframe) and an out-year case (2015 timeframe). The following conclusions are drawn:

- Results of the near-term and out-year analyses show that terminal equipment replacements / adjustments would be required on the Max-Minot Wind-Mallard 115 kV line to allow this line to be increased to its conductor loading limit of 187 MVA.

- Post-contingency overloads were observed on the Minot Wind – Mallard 115 kV line following the Leland Olds – Logan 230 kV outage both in the near-term and out-year cases (post-contingency loadings above the aforementioned 187 MVA thermal rating).

  For the near-term scenario, these overloads can be mitigated by applying the B10T Operating Guide (B10T reduced to 75 MW North) to reduce the loading below 187 MVA.

  For the out-year scenario however, additional operating procedures (over and above the B10T Operating Guide) will be needed to reduce the loading below 187 MVA. This will need to be addressed and may likely involve generation runback at Minot Wind. Analysis shows that reducing Minot Wind to 100 MW will mitigate this overload. Alternatively, a Remedial Action Scheme (RAS) with local sensing may be considered to drop the wind farm if loading on the Max-Mallard line approaches the thermal limit. The RAS may be needed to reduce the loading on this line below the thermal limit for loss of Leland Olds-Logan 230 kV in the 2015 out year timeframe.

- One other concern that was identified in under B10T South scenarios was the loading on the Garrison-Beulah 115 kV line (see Section 4.4). A new overload was observed on this line following contingency '105 1' (loss of Bismark-Garrison, Bismark-Washburn and Garrison-Leland Olds 230 kV lines). The worst case post-contingency loading was observed in the near-term analysis on this line at 131.5 MW which is 104.9% of Rate A (120 MVA). Rate C of this line is 132 MVA. No overload was seen in the out-year analysis. Operating procedures such as reducing Minot Wind can be utilized to reduce loading to acceptable levels.

Constrained Interface Analysis:

The study also evaluated the impact of the proposed project on constrained interfaces in the MAPP system. These results are for informational purposes only to identify potential third party flowgate issues for the requested delivery component of the transmission. Results indicate that the proposed project does not adversely impact the MAPP interfaces.

Short-Circuit Analysis:

The addition of the proposed GI-0503 project increases fault currents in the study area. Breaker ratings were not available for the impacted substations. When this

information does become available, the calculated fault currents should be compared against the breaker ratings in order to determine whether existing breakers at these substations could become overstressed and whether breaker replacements may be required.

The results of this study are based on available data and assumptions made at the time of conducting this study. If any of the data and/or assumptions made in developing the study models change, the results provided in this report may not apply.

8. REFERENCES

[1] "300 MW Yearly Firm Network Transmission Service Request – Follow-up evaluation of 130 MW NDEX Increase", by WAPA UGPR, September 24, 2004.

[2] Attachment A of MAPP Design Review Subcommittee Policies and Procedure Manual (Version 5.0) - "Steady-State Facility and Flowgate Impact Determination Requirements and Screening Guidelines for Study Submissions", Prepared by Prepared by MAPP Design Review Subcommittee Members, June 2007.

[3] "System Impact Study - Project # GI-0217 500 MW Coal Fired Plant in Stark County, ND – Final Report" Submitted to Western Area Power Administration by ABB Inc. February 26, 2007. Report No. 2007-11274-013-2.R05.

[4] Boundary Dam – Tioga 230 kV line (B10T) Operating Guide. June 28, 2001.

Appendix A – Stability Analysis Results – Original Cases

Appendix A.1: Summary for Case b00-so09aa.sav (Without GI-0503)

```
B00-SO09AA.SAV;SUMMER;OP LD;SYSTEM INTACT           :
ND=2080,MH=2175,MW=1249,OHMH=-195,OHMP=150,EWTW=99,BD=164


                    P O W E R   F L O W   S U M M A R Y
-------------------------------------------------------------------------------
               NDEX:      2080 MW         ECL-ARP:  528 MW
               MHEX:      2175 MW         PRI-BYN:  721 MW
               MWSI:      1249 MW         AHD-GPK:  554 MW
                                          NI-WUMS:  151 MW
               COOPER S:  1066 MW         WNE-WKS:  512 MW
               FTCAL S:    665 MW         GGS:     1504 MW
               GRIS-LNC:   686 MW         QC WEST:  -50 MW

           LOAD LEVELS AS PERCENT OF 2009 SUMMER PEAK:
           NORTH DAKOTA (ZONE 90,990) 1811.2 MW,  61.9% OF  2925.0 MW
           NSP             (AREA 600)  8783.8 MW,  91.2% OF  9632.0 MW
           MAN HYDRO       (AREA 667) 2126.0 MW,  71.7% OF  2964.0 MW

Load/Losses   MW  / MW       Generation        MW       Export            MW
----------- ------ -----     --------------- ------     --------------- ------
Manitoba      2126/ 267      MH total gross    4722     SPARE                0
Ont. total   22150/ 482         Wpg River       534     SPARE                0
     NW        915/  45         7 Sisters       165     SPARE                0
Sask.         1944/  85      OH total gross   21779     East Bias          297
MP            1944/ 213         northwest       816     SPC>WAPA (B10T)    164
NSP           8783/ 547      SPC total gross   2240     MH>SPC  (3-230)     20
N. Dakota     1811/ 288      MP total gross    2805     MH>SPC  (FALLS)    -66
Manitoba       450 MVARS     ND Cfd AC gross   3256     OH>MH  @Kenora    -195
Ont. total   13082 MVARS              net      3085     OH>MP  @Ft Fran    150
     NW        489 MVARS     NSP East gross    1609     OH E>W @Wawa        99
Sask.          453 MVARS              net      1522     OH>East USA          0
MP             493 MVARS         West gross    3010     F601C  @Forbes    1898
NSP           1849 MVARS              net      2848     D602F  @Dorsey    1826
N. Dakota      362 MVARS         Total net     6530     L20D   @Letell     230
                             WAPA SD Hydro     1497     R50M   @Richer     136
                             Pleasant Valley      0     G82R   @Glenboro   -18
                             LGS/Trimont         99
                             SW MN Wind         830
                             Swing Bus         1089

Tfmrs          MVA/ Load     Ph Shifters  Deg/  MW      DC Lines          MW
------------- ---- -----     ------------ --- -----     --------------- ------
Wshell #1 7-7  105/  73%     Stinson       18/  109     CU (1,2)         1104
Wshell #2 7-7  105/  73%     Boundary Dam  17/  164     SQ BU (3,4)       504
Drayton#1 4-7   45/  32%     Whiteshell    75/  199     MH Bipole 1      1514
Drayton#2 4-7   55/  29%     Int Falls     95/  150     MH Bipole 2      1714
Dorsey #1 2-4  883/  73%     St. Lawrence  15/    0     MH (BP1+BP2)     3228
Dorsey #2 2-4  993/  82%                                Miles City E>W    -150
Forbes    2-4   98/  14%                                RCDC (15)           0
                                                        Stegall (10)        0

Dorsey SC's       I/S  MVAR  Qmax/ Qmin    SVC's              MVAR  Qmax/ Qmin
---------------- --- -----  ---- -----    ---------------- -----  ---- -----
MIL 7-9G     17.0  2    518   600/ -330    Forbes        500     5   400/ -450
SCE 1-3G     18.2  3    422   480/ -240    Fargo        13.2   -11    20/ -135
SCA 4-6G     18.2  3    422   480/ -240    Watertown    20.0   -29   125/  -86
                         -----  ---- -----
       Total           1363  1560/ -810    Series Caps       Num In Serv
       Margin           197                ---------------- -----------
                                           Roseau        500   2 of 2
                                           Chisago       500   1 of 1

Caps/Reactors       MVAR   Caps/Reactors       MVAR   Caps/Reactors       MVAR
------------------ -----   ------------------ -----   ------------------ -----
Balta     (FS) 230     0   Arrowhead      230   160   Chisago T  9  34.5    51
```

Drayton	115	0	Blackberry	230	47	Chisago T 10	34.5	51
Drayton	13.8	-20	Minntac	115	45	Forbes	230	70
Eau Claire(FS)	161	267	Riverton	230	47	Forbes	500	600
Kohlman Lake	115	240	Roseau Co.(FS)	230	0			0
Parkers Lk(FS)	115	80	Running (FS)	230	30	Fargo	115	54
Prairie (FS)	115	40	Running react	230	0	Watertown	20	20
Ramsey (FS)	230	0	Shannon	230	72	Watertown	230	76
Red Rock	115	240			0			0
Rugby	13.8	-25	Glenboro	230	0			0
Split Rock(FS)	115	160	Laverendrye	110	98			0
Sheyenne (FS)	115	80	Richer react	230	0			0
Wilton/Bemidji	115	20	St Vital	110	98			0

Bus Voltages		V,pu	Bus Voltages		V,pu	Bus Voltages		V,kV
Adams	345	1.013	Arrowhead	230	0.996	Whiteshell	110	118.9
Alexandria	115	1.009	Badoura	115	1.025	Kenora	220	247.4
Audubon	115	1.037	Blackberry	230	1.026	Dryden	220	252.0
Bemidji	115	1.018	Boise Cascade	13.8	1.052	Fort Frances	220	246.3
Byron	345	1.026	Boise Cascade	115	1.021	Mackenzie	220	256.5
Chisago Co.	345	1.000	ETCO	115	0.992	Lakehead	220	256.2
Chisago Co.	500	0.992	Forbes	230	0.999	Marathon	220	260.7
Drayton	230	1.005	Forbes	500	0.991	Wawa	220	258.2
Eau Claire	345	1.021	Hubbard	115	1.028	Mississagi	220	250.5
WEST FARIBAULT	115	1.006	Intl Falls	115	1.021	Fort Frances	118	119.7
LaPorte	115	1.017	Minntac	115	1.001	Lakehead	118	122.8
Maple River	230	1.030	Moranville	230	1.025	Birch	118	117.5
Marshall Tap	115	1.025	Riverton	230	1.014	Marathon	118	125.2
Owatonna	161	0.991	Running	230	1.023			0.0
Prairie	115	1.018	Shannon	230	1.021			0.0
Prairie	230	1.013			0.000			0.0
Ramsey	230	1.018	Groton	345	1.029			0.0
Roseau County	230	1.024	Watertown	230	1.030			0.0
Roseau County	500	1.069	Watertown	345	1.034			0.0
Sheyenne	230	1.031			0.000			0.0
Thief R Falls	115	1.011	Dorsey	230	1.045			0.0
Tioga	230	1.026	Dorsey	500	1.039			0.0
Wahpeton	230	1.020			0.000			0.0
Winger	115	1.034			0.000			0.0

Steady State Relay Margins (measured from inner blinder)

Relay Location	Manuf/Type	PSS Model	South	North	Em North
1) B10T-Tioga (South)	GE OST	SLLP	336%	N/A	N/A
2) -Tioga (North)	GE OST	SLLP	691%	N/A	N/A
3) -Tioga (Em North)	GE OST	SLLP		N/A	N/A
4) D602F-Dorsey	ATP ???	SLINOS	347%	N/A	N/A
5) -Forbes (Normal)	ATP ???	SLINOS	218%	N/A	N/A
6) -Forbes (Em Nrth)	APT S-PRO	SLINOS		N/A	N/A
8) F3M-Intl Falls	APT S-PRO	SLINOS	327%	N/A	N/A
9) G82R-Rugby	APT	SLINOS	N/A	2053%	
10) L20D-Drayton (Normal)	APT, ASEA	SLINOS	861%	N/A	N/A
11) -Drayton (Em Nrth)	ASEA RXZF2	SLINOS		N/A	N/A
12) R50M-Moranville (Norm)	APT, West	SLINOS	989%	N/A	N/A
13) -Moranville (Em N)	ASEA RXZF2	SLINOS		N/A	N/A

Appendix A.2: Summary for Case b01-so09aa.sav (With 100 MW GI-0503)

```
B01-SO09AA.SAV;SUMMER;OP LD;SYSTEM INTACT          :
ND=2080,MH=2175,MW=1249,OHMH=-195,OHMP=150,EWTW=99,BD=164


                    P O W E R   F L O W   S U M M A R Y
-------------------------------------------------------------------------------
               NDEX:      2080 MW         ECL-ARP:  528 MW
               MHEX:      2175 MW         PRI-BYN:  721 MW
               MWSI:      1249 MW         AHD-GPK:  554 MW
                                          NI-WUMS:  151 MW
               COOPER S:  1069 MW         WNE-WKS:  513 MW
               FTCAL S:    667 MW         GGS:     1504 MW
               GRIS-LNC:   687 MW         QC WEST:  -49 MW

           LOAD LEVELS AS PERCENT OF 2009 SUMMER PEAK:
           NORTH DAKOTA (ZONE 90,990) 1901.7 MW,  65.0% OF  2925.0 MW
           NSP             (AREA 600)  8777.5 MW,  91.1% OF  9632.0 MW
           MAN HYDRO       (AREA 667) 2126.0 MW,  71.7% OF  2964.0 MW

Load/Losses   MW  / MW       Generation        MW       Export            MW
----------- ------ -----     --------------- ------     --------------- ------
Manitoba      2126/ 267      MH total gross    4722     SPARE                0
Ont. total   22150/ 482         Wpg River       534     SPARE                0
     NW        915/  45         7 Sisters       165     SPARE                0
Sask.         1944/  85      OH total gross   21779     East Bias          293
MP            1944/ 212         northwest       816     SPC>WAPA (B10T)    164
NSP           8777/ 546      SPC total gross   2240     MH>SPC  (3-230)     20
N. Dakota     1901/ 298      MP total gross    2805     MH>SPC  (FALLS)    -66
Manitoba       450 MVARS     ND Cfd AC gross   3256     OH>MH  @Kenora    -195
Ont. total   13082 MVARS              net      3085     OH>MP  @Ft Fran    150
     NW        489 MVARS     NSP East gross    1609     OH E>W @Wawa        99
Sask.          453 MVARS              net      1522     OH>East USA          0
MP             493 MVARS         West gross    3010     F601C  @Forbes    1895
NSP           1848 MVARS              net      2848     D602F  @Dorsey    1826
N. Dakota      379 MVARS         Total net     6530     L20D   @Letell     235
                                WAPA SD Hydro     1497     R50M   @Richer     137
                                Pleasant Valley      0     G82R   @Glenboro   -23
                                LGS/Trimont         99
                                SW MN Wind         830
                                Swing Bus         1002


Tfmrs          MVA/ Load     Ph Shifters  Deg/  MW      DC Lines          MW
------------- ---- -----     ------------ --- -----     --------------- ------
Wshell #1 7-7  105/  73%     Stinson       18/  109     CU (1,2)          1104
Wshell #2 7-7  105/  73%     Boundary Dam  18/  164     SQ BU (3,4)        504
Drayton#1 4-7   45/  32%     Whiteshell    75/  199     MH Bipole 1       1514
Drayton#2 4-7   56/  30%     Int Falls     95/  150     MH Bipole 2       1714
Dorsey #1 2-4  883/  73%     St. Lawrence  15/    0     MH (BP1+BP2)      3228
Dorsey #2 2-4  993/  82%                                Miles City E>W    -150
Forbes    2-4   97/  14%                                RCDC (15)            0
                                                        Stegall (10)         0

Dorsey SC's       I/S  MVAR  Qmax/ Qmin    SVC's              MVAR  Qmax/ Qmin
----------------- --- -----  ---- -----    ----------------- -----  ---- -----
MIL 7-9G     17.0  2    517   600/ -330    Forbes        500     5   400/ -450
SCE 1-3G     18.2  3    422   480/ -240    Fargo        13.2    -7    20/ -135
SCA 4-6G     18.2  3    422   480/ -240    Watertown    20.0    17   125/  -86
                        -----  ---- -----
       Total           1362  1560/ -810    Series Caps       Num In Serv
       Margin           198                ----------------- -----------
                                           Roseau        500   2 of 2
                                           Chisago       500   1 of 1


Caps/Reactors       MVAR   Caps/Reactors       MVAR   Caps/Reactors       MVAR
------------------ -----   ------------------ -----   ------------------ -----
Balta     (FS) 230     0   Arrowhead      230   160   Chisago T  9  34.5    51
```

Drayton	115	0	Blackberry	230	47	Chisago T 10	34.5	51
Drayton	13.8	-20	Minntac	115	45	Forbes	230	70
Eau Claire(FS)	161	267	Riverton	230	47	Forbes	500	600
Kohlman Lake	115	240	Roseau Co.(FS)	230	0			0
Parkers Lk(FS)	115	80	Running (FS)	230	30	Fargo	115	54
Prairie (FS)	115	40	Running react	230	0	Watertown	20	20
Ramsey (FS)	230	0	Shannon	230	72	Watertown	230	0
Red Rock	115	240			0			0
Rugby	13.8	-25	Glenboro	230	0			0
Split Rock(FS)	115	160	Laverendrye	110	98			0
Sheyenne (FS)	115	80	Richer react	230	0			0
Wilton/Bemidji	115	20	St Vital	110	98			0

Bus Voltages		V,pu	Bus Voltages		V,pu	Bus Voltages		V,kV
Adams	345	1.013	Arrowhead	230	0.995	Whiteshell	110	118.9
Alexandria	115	1.006	Badoura	115	1.025	Kenora	220	247.4
Audubon	115	1.036	Blackberry	230	1.026	Dryden	220	252.0
Bemidji	115	1.019	Boise Cascade	13.8	1.052	Fort Frances	220	246.3
Byron	345	1.026	Boise Cascade	115	1.021	Mackenzie	220	256.5
Chisago Co.	345	1.000	ETCO	115	0.992	Lakehead	220	256.2
Chisago Co.	500	0.992	Forbes	230	0.999	Marathon	220	260.7
Drayton	230	1.008	Forbes	500	0.991	Wawa	220	258.2
Eau Claire	345	1.020	Hubbard	115	1.027	Mississagi	220	250.5
WEST FARIBAULT	115	1.006	Intl Falls	115	1.021	Fort Frances	118	119.7
LaPorte	115	1.017	Minntac	115	1.001	Lakehead	118	122.8
Maple River	230	1.028	Moranville	230	1.025	Birch	118	117.5
Marshall Tap	115	1.025	Riverton	230	1.014	Marathon	118	125.2
Owatonna	161	0.991	Running	230	1.023			0.0
Prairie	115	1.023	Shannon	230	1.021			0.0
Prairie	230	1.018			0.000			0.0
Ramsey	230	1.016	Groton	345	1.030			0.0
Roseau County	230	1.024	Watertown	230	1.030			0.0
Roseau County	500	1.069	Watertown	345	1.034			0.0
Sheyenne	230	1.029			0.000			0.0
Thief R Falls	115	1.016	Dorsey	230	1.045			0.0
Tioga	230	1.024	Dorsey	500	1.039			0.0
Wahpeton	230	1.018			0.000			0.0
Winger	115	1.036			0.000			0.0

Steady State Relay Margins (measured from inner blinder)

Relay Location	Manuf/Type	PSS Model	South	North	Em North
1) B10T-Tioga (South)	GE OST	SLLP	335%	N/A	N/A
2) -Tioga (North)	GE OST	SLLP	689%	N/A	N/A
3) -Tioga (Em North)	GE OST	SLLP		N/A	N/A
4) D602F-Dorsey	ATP ???	SLINOS	347%	N/A	N/A
5) -Forbes (Normal)	ATP ???	SLINOS	218%	N/A	N/A
6) -Forbes (Em Nrth)	APT S-PRO	SLINOS		N/A	N/A
8) F3M-Intl Falls	APT S-PRO	SLINOS	327%	N/A	N/A
9) G82R-Rugby	APT	SLINOS	N/A	1786%	
10) L20D-Drayton (Normal)	APT, ASEA	SLINOS	847%	N/A	N/A
11) -Drayton (Em Nrth)	ASEA RXZF2	SLINOS		N/A	N/A
12) R50M-Moranville (Norm)	APT, West	SLINOS	988%	N/A	N/A
13) -Moranville (Em N)	ASEA RXZF2	SLINOS		N/A	N/A

Appendix A.3: Summary for Case b02-so09aa.sav (With 125 MW GI-0503)

```
B02-SO09AA.SAV;SUMMER;OP LD;SYSTEM INTACT           :
ND=2080,MH=2175,MW=1249,OHMH=-195,OHMP=150,EWTW=99,BD=164


                    P O W E R   F L O W   S U M M A R Y
-------------------------------------------------------------------------------
               NDEX:      2080 MW         ECL-ARP:  528 MW
               MHEX:      2175 MW         PRI-BYN:  721 MW
               MWSI:      1249 MW         AHD-GPK:  554 MW
                                          NI-WUMS:  151 MW
               COOPER S:  1070 MW         WNE-WKS:  513 MW
               FTCAL S:    667 MW         GGS:     1504 MW
               GRIS-LNC:   687 MW         QC WEST:  -49 MW

           LOAD LEVELS AS PERCENT OF 2009 SUMMER PEAK:
           NORTH DAKOTA (ZONE 90,990) 1922.5 MW,  65.7% OF  2925.0 MW
           NSP             (AREA 600)  8776.6 MW,  91.1% OF  9632.0 MW
           MAN HYDRO       (AREA 667) 2126.0 MW,  71.7% OF  2964.0 MW

Load/Losses   MW  / MW       Generation        MW       Export            MW
----------- ------ -----     --------------- ------     --------------- ------
Manitoba      2126/ 267      MH total gross    4722     SPARE                0
Ont. total   22150/ 482         Wpg River       534     SPARE                0
     NW        915/  45         7 Sisters       165     SPARE                0
Sask.         1944/  85      OH total gross   21779     East Bias          293
MP            1944/ 212         northwest       816     SPC>WAPA (B10T)    164
NSP           8776/ 546      SPC total gross   2240     MH>SPC  (3-230)     20
N. Dakota     1922/ 301      MP total gross    2805     MH>SPC  (FALLS)    -66
Manitoba       450 MVARS     ND Cfd AC gross   3256     OH>MH  @Kenora    -195
Ont. total   13082 MVARS              net      3085     OH>MP  @Ft Fran    150
     NW        489 MVARS     NSP East gross    1609     OH E>W @Wawa        99
Sask.          453 MVARS              net      1522     OH>East USA          0
MP             493 MVARS         West gross    3010     F601C  @Forbes    1895
NSP           1848 MVARS              net      2848     D602F  @Dorsey    1826
N. Dakota      383 MVARS         Total net     6530     L20D   @Letell     236
                             WAPA SD Hydro     1497     R50M   @Richer     137
                             Pleasant Valley      0     G82R   @Glenboro   -24
                             LGS/Trimont         99
                             SW MN Wind         830
                             Swing Bus          981


Tfmrs          MVA/ Load     Ph Shifters  Deg/  MW      DC Lines          MW
------------- ---- -----     ------------ --- -----     --------------- ------
Wshell #1 7-7  105/  73%     Stinson       18/  109     CU (1,2)         1103
Wshell #2 7-7  105/  73%     Boundary Dam  19/  164     SQ BU (3,4)       504
Drayton#1 4-7   46/  32%     Whiteshell    75/  199     MH Bipole 1      1514
Drayton#2 4-7   57/  30%     Int Falls     95/  150     MH Bipole 2      1714
Dorsey #1 2-4  883/  73%     St. Lawrence  15/    0     MH (BP1+BP2)     3228
Dorsey #2 2-4  993/  82%                                Miles City E>W    -150
Forbes    2-4   97/  14%                                RCDC (15)           0
                                                        Stegall (10)        0

Dorsey SC's       I/S  MVAR  Qmax/ Qmin    SVC's              MVAR  Qmax/ Qmin
---------------- --- -----  ---- -----    ---------------- -----  ---- -----
MIL 7-9G     17.0  2    517   600/ -330    Forbes        500     5   400/ -450
SCE 1-3G     18.2  3    422   480/ -240    Fargo        13.2   -13    20/ -135
SCA 4-6G     18.2  3    422   480/ -240    Watertown    20.0    16   125/  -86
                        -----  ---- -----
       Total           1362  1560/ -810    Series Caps       Num In Serv
       Margin           198                ---------------- -----------
                                           Roseau        500   2 of 2
                                           Chisago       500   1 of 1


Caps/Reactors       MVAR   Caps/Reactors       MVAR   Caps/Reactors       MVAR
------------------ -----   ------------------ -----   ------------------ -----
Balta     (FS) 230     0   Arrowhead      230   160   Chisago T  9  34.5    51
```

Drayton	115	0	Blackberry	230	47	Chisago T 10	34.5	51
Drayton	13.8	-20	Minntac	115	45	Forbes	230	70
Eau Claire(FS)	161	267	Riverton	230	47	Forbes	500	600
Kohlman Lake	115	240	Roseau Co.(FS)	230	0			0
Parkers Lk(FS)	115	80	Running (FS)	230	30	Fargo	115	54
Prairie (FS)	115	40	Running react	230	0	Watertown	20	20
Ramsey (FS)	230	0	Shannon	230	72	Watertown	230	0
Red Rock	115	240			0			0
Rugby	13.8	-25	Glenboro	230	0			0
Split Rock(FS)	115	160	Laverendrye	110	98			0
Sheyenne (FS)	115	80	Richer react	230	0			0
Wilton/Bemidji	115	20	St Vital	110	98			0

Bus Voltages		V,pu	Bus Voltages		V,pu	Bus Voltages		V,kV
Adams	345	1.013	Arrowhead	230	0.995	Whiteshell	110	118.9
Alexandria	115	1.006	Badoura	115	1.025	Kenora	220	247.4
Audubon	115	1.036	Blackberry	230	1.026	Dryden	220	252.0
Bemidji	115	1.019	Boise Cascade	13.8	1.052	Fort Frances	220	246.3
Byron	345	1.026	Boise Cascade	115	1.021	Mackenzie	220	256.5
Chisago Co.	345	1.000	ETCO	115	0.992	Lakehead	220	256.2
Chisago Co.	500	0.992	Forbes	230	0.999	Marathon	220	260.7
Drayton	230	1.008	Forbes	500	0.991	Wawa	220	258.2
Eau Claire	345	1.020	Hubbard	115	1.028	Mississagi	220	250.5
WEST FARIBAULT	115	1.006	Intl Falls	115	1.021	Fort Frances	118	119.7
LaPorte	115	1.017	Minntac	115	1.001	Lakehead	118	122.8
Maple River	230	1.029	Moranville	230	1.025	Birch	118	117.5
Marshall Tap	115	1.025	Riverton	230	1.014	Marathon	118	125.2
Owatonna	161	0.991	Running	230	1.023			0.0
Prairie	115	1.024	Shannon	230	1.021			0.0
Prairie	230	1.019			0.000			0.0
Ramsey	230	1.016	Groton	345	1.030			0.0
Roseau County	230	1.024	Watertown	230	1.030			0.0
Roseau County	500	1.069	Watertown	345	1.034			0.0
Sheyenne	230	1.030			0.000			0.0
Thief R Falls	115	1.016	Dorsey	230	1.045			0.0
Tioga	230	1.023	Dorsey	500	1.039			0.0
Wahpeton	230	1.019			0.000			0.0
Winger	115	1.037			0.000			0.0

Steady State Relay Margins (measured from inner blinder)

Relay Location	Manuf/Type	PSS Model	South	North	Em North
1) B10T-Tioga (South)	GE OST	SLLP	334%	N/A	N/A
2) -Tioga (North)	GE OST	SLLP	688%	N/A	N/A
3) -Tioga (Em North)	GE OST	SLLP		N/A	N/A
4) D602F-Dorsey	ATP ???	SLINOS	347%	N/A	N/A
5) -Forbes (Normal)	ATP ???	SLINOS	218%	N/A	N/A
6) -Forbes (Em Nrth)	APT S-PRO	SLINOS		N/A	N/A
8) F3M-Intl Falls	APT S-PRO	SLINOS	327%	N/A	N/A
9) G82R-Rugby	APT	SLINOS	N/A	1735%	
10) L20D-Drayton (Normal)	APT, ASEA	SLINOS	844%	N/A	N/A
11) -Drayton (Em Nrth)	ASEA RXZF2	SLINOS		N/A	N/A
12) R50M-Moranville (Norm)	APT, West	SLINOS	987%	N/A	N/A
13) -Moranville (Em N)	ASEA RXZF2	SLINOS		N/A	N/A

Appendix A.4: Simulation Summary Tables for Baseline Analysis

1	**Case No.**	1	2	3	4	5
2	**Case Name**	b00-so09aa-yas	b00-so09aa-ac3	b00-so09aa-ad3	b00-so09aa-ag1	b00-so09aa-ag3
3	**Disturbance**	yas	ac3	ad3	ag1	ag3
4	**Prior Outage**	None	None	None	None	None
5	**Date/Time**	OCT 19 2007 11:46	OCT 19 2007 11:11	OCT 19 2007 11:13	OCT 19 2007 11:35	OCT 19 2007 11:14
6	**Comments**					
7						
8	**Steady State Flows**					
9	NDEX / EAST BIAS	2080 / 297	2080 / 297	2080 / 297	2080 / 297	2080 / 297
10	MHEX / L20D	2175 / 230	2175 / 230	2175 / 230	2175 / 230	2175 / 230
11	ECL-ARP / PRI-BYN	528 / 721	528 / 721	528 / 721	528 / 721	528 / 721
12	MWSI / MNEX	1249	1249	1249	1249	1249
13	D602F / F601C	1826 / 1898	1826 / 1898	1826 / 1898	1826 / 1898	1826 / 1898
14	B10T / MH>SPC	164 / 20	164 / 20	164 / 20	164 / 20	164 / 20
15	OH E-W / OH>MH	99 / -195	99 / -195	99 / -195	99 / -195	99 / -195
16	R50M / OH>MP	136 / 150	136 / 150	136 / 150	136 / 150	136 / 150
17	G82R	-18	-18	-18	-18	-18
18	Dorsey bipole / CU bipole	3228 / 1104	3228 / 1104	3228 / 1104	3228 / 1104	3228 / 1104
19	Dorsey Reserve / Wtrtn SVC	197 / -29	197 / -29	197 / -29	197 / -29	197 / -29
20	Forbes SVC / MSC	5 / 600	5 / 600	5 / 600	5 / 600	5 / 600
21	Arrowhd-Wstn/ RCDC	554 / 0	554 / 0	554 / 0	554 / 0	554 / 0
22	**Steady State Vltgs**					
23	Dorsey 500/Dorsey 230	1.039 / 1.045	1.039 / 1.045	1.039 / 1.045	1.039 / 1.045	1.039 / 1.045
24	Roseau 500/Forbes 500	1.069 / 0.991	1.069 / 0.991	1.069 / 0.991	1.069 / 0.991	1.069 / 0.991
25	Chisago 500/EauClaire 345	0.992 / 1.021	0.992 / 1.021	0.992 / 1.021	0.992 / 1.021	0.992 / 1.021
26	Int Falls 115/Badoura 115	1.021 / 1.025	1.021 / 1.025	1.021 / 1.025	1.021 / 1.025	1.021 / 1.025
27	Drayton 230/Groton 345	1.005 / 1.029	1.005 / 1.029	1.005 / 1.029	1.005 / 1.029	1.005 / 1.029
28	**SS OS Relay Margins**					
29	D602F at Forbes/Dorsey	218% / 347%	218% / 347%	218% / 347%	218% / 347%	218% / 347%
30	82R at Rugby/L20D at Drayton	999% / 862%	999% / 862%	999% / 862%	999% / 862%	999% / 862%
31	R50M/F3M	989% / 328%	989% / 328%	989% / 328%	989% / 328%	989% / 328%
32	B10T	336%	336%	336%	336%	336%
33	**Min/MaxTransientVltg**					
34	Arrowhd 230	0.90 | 0.97	0.96 | 1.01	0.97 | 1.01	0.96 | 1.01	0.96 | 1.01
35	Boise 115	1.01 | 1.04	0.99 | 1.03	1.00 | 1.03	0.99 | 1.04	0.99 | 1.04
36	Dorsey 230	1.04 | 1.07	1.02 | 1.06	1.03 | 1.06	1.02 | 1.06	1.02 | 1.06
37	Forbes 230	0.98 | 1.01	0.98 | 1.01	0.98 | 1.02	0.98 | 1.01	0.98 | 1.01
38	Riverton 230	0.97 | 1.02	0.97 | 1.04	0.98 | 1.04	0.97 | 1.04	0.97 | 1.04
39	Coal Creek 230	0.98 | 1.06	0.95 | 1.12	0.96 | 1.12	0.96 | 1.12	0.96 | 1.12
40	Dickinson 345	0.93 | 1.00	0.94 | 1.04	0.94 | 1.04	0.93 | 1.04	0.94 | 1.04
41	Drayton 230	0.99 | 1.02	0.96 | 1.10	0.97 | 1.08	0.96 | 1.09	0.95 | 1.09
42	Groton 345	1.01 | 1.03	0.88 | 1.07	0.90 | 1.09	0.86 | 1.08	0.86 | 1.07
43	Tioga 230	1.01 | 1.03	0.97 | 1.05	0.98 | 1.05	0.98 | 1.06	0.98 | 1.06
44	Wahpeton 115	1.02 | 1.05	0.94 | 1.10	0.97 | 1.10	0.94 | 1.10	0.94 | 1.10
45	Watertown 345	1.02 | 1.03	0.97 | 1.07	0.96 | 1.07	0.94 | 1.06	0.94 | 1.06
46	**Dynamic Voltage Warnings**					
47		none	none	none	none	none
48						
49						
50						
51						
52						
53						
54	Worst Case Angle Damping					
55	Dorsey SUVP / UdHold					
56	Forbes DC Red (DCAR)	434%	420%	399%	411%	405%
57	K22W (max +dP @ t, d-ang)	2.2@(0.11667,0.4)	12.7@(2.59165,1.2)	15.4@(2.47499,-1.0)	12.0@(2.61665,2.2)	12.4@(2.56665,2.9)
58	K22W (max -dP @ t, d-ang)	24.1@(1.62500,10.6)	21.6@(0.78333,5.5)	14.4@(0.66666,2.8)	24.2@(0.82500,6.0)	24.0@(0.77500,6.5)
59	K22W (max d-ang @ t, dP)	11.8@(1.11666,-16.5)	8.4@(1.11666,-7.1)	5.4@(1.04166,-2.5)	9.3@(1.15000,-7.6)	9.7@(1.10000,-8.3)
60	**OS Rel Trip / Marg**					
61	MH - OH					
62	D602F at Forbes/Dorsey	194% / 308%	162% / 253%	179% / 282%	161% / 251%	158% / 246%
63	82R at Rugby/L20D at Drayton	999% / 743%	999% / 671%	999% / 701%	999% / 633%	999% / 655%
64	R50M / F3M	908% / 328%	773% / 266%	841% / 276%	768% / 266%	757% / 264%
65	B10T	263%	179%	178%	171%	169%
66	**FSCAPS (SS/Unav/Final)**					
67	Balta 230	(0 | 0 | 0)	(0 | 3 | 0)	(0 | 1 | 0)	(0 | 3 | 0)	(0 | 3 | 0)
68	Eau Cl 345 / Park Lk 115	(3 | 3 | 3) / (1 | 1 | 1)	(3 | 3 | 3) / (1 | 1 | 1)	(3 | 3 | 3) / (1 | 1 | 1)	(3 | 3 | 3) / (1 | 1 | 1)	(3 | 3 | 3) / (1 | 1 | 1)
69	Prairie 115 / Ramsey 230	(1 | 1 | 1) / (0 | 0 | 0)	(1 | 7 | 2) / (0 | 0 | 0)	(1 | 5 | 2) / (0 | 0 | 0)	(1 | 8 | 2) / (0 | 0 | 0)	(1 | 8 | 3) / (0 | 0 | 0)
70	Roseau 230 / Running 230	(0 | 0 | 0) / (1 | 1 | 1)	(0 | 0 | 0) / (1 | 1 | 1)	(0 | 0 | 0) / (1 | 1 | 1)	(0 | 0 | 0) / (1 | 1 | 1)	(0 | 0 | 0) / (1 | 1 | 1)
71	Shey 115 / Split Rock 115	(2 | 2 | 2) / (2 | 2 | 2)	(2 | 5 | 2) / (2 | 2 | 2)	(2 | 5 | 1) / (2 | 2 | 2)	(2 | 5 | 2) / (2 | 2 | 2)	(2 | 5 | 2) / (2 | 2 | 2)
72	**Damping Performance**	N/A	N/A	N/A	N/A	N/A

Appendix A.4: Simulation Summary Tables for Baseline Analysis

1	**Case No.**	6	7	8	9	10
2	**Case Name**	b00-so09aa-bl3	b00-so09aa-eb3	b00-so09aa-ec3	b00-so09aa-ef3	b00-so09aa-ei2
3	**Disturbance**	bl3	eb3	ec3	ef3	ei2
4	**Prior Outage**	None	None	None	None	None
5	**Date/Time**	OCT 19 2007 11:16	OCT 19 2007 11:18	OCT 19 2007 11:20	OCT 19 2007 11:22	OCT 19 2007 11:26
6	**Comments**					
7						
8	**Steady State Flows**					
9	NDEX / EAST BIAS	2080 / 297	2080 / 297	2080 / 297	2080 / 297	2080 / 297
10	MHEX / L20D	2175 / 230	2175 / 230	2175 / 230	2175 / 230	2175 / 230
11	ECL-ARP / PRI-BYN	528 / 721	528 / 721	528 / 721	528 / 721	528 / 721
12	MWSI / MNEX	1249	1249	1249	1249	1249
13	D602F / F601C	1826 / 1898	1826 / 1898	1826 / 1898	1826 / 1898	1826 / 1898
14	B10T / MH>SPC	164 / 20	164 / 20	164 / 20	164 / 20	164 / 20
15	OH E-W / OH>MH	99 / -195	99 / -195	99 / -195	99 / -195	99 / -195
16	R50M / OH>MP	136 / 150	136 / 150	136 / 150	136 / 150	136 / 150
17	G82R	-18	-18	-18	-18	-18
18	Dorsey bipole / CU bipole	3228 / 1104	3228 / 1104	3228 / 1104	3228 / 1104	3228 / 1104
19	Dorsey Reserve / Wtrtn SVC	197 / -29	197 / -29	197 / -29	197 / -29	197 / -29
20	Forbes SVC / MSC	5 / 600	5 / 600	5 / 600	5 / 600	5 / 600
21	Arrowhd-Wstn/ RCDC	554 / 0	554 / 0	554 / 0	554 / 0	554 / 0
22	**Steady State Vltgs**					
23	Dorsey 500/Dorsey 230	1.039 / 1.045	1.039 / 1.045	1.039 / 1.045	1.039 / 1.045	1.039 / 1.045
24	Roseau 500/Forbes 500	1.069 / 0.991	1.069 / 0.991	1.069 / 0.991	1.069 / 0.991	1.069 / 0.991
25	Chisago 500/EauClaire 345	0.992 / 1.021	0.992 / 1.021	0.992 / 1.021	0.992 / 1.021	0.992 / 1.021
26	Int Falls 115/Badoura 115	1.021 / 1.025	1.021 / 1.025	1.021 / 1.025	1.021 / 1.025	1.021 / 1.025
27	Drayton 230/Groton 345	1.005 / 1.029	1.005 / 1.029	1.005 / 1.029	1.005 / 1.029	1.005 / 1.029
28	**SS OS Relay Margins**					
29	D602F at Forbes/Dorsey	218% / 347%	218% / 347%	218% / 347%	218% / 347%	218% / 347%
30	82R at Rugby/L20D at Drayton	999% / 862%	999% / 862%	999% / 862%	999% / 862%	999% / 862%
31	R50M/F3M	989% / 328%	989% / 328%	989% / 328%	989% / 328%	989% / 328%
32	B10T	336%	336%	336%	336%	336%
33	**Min/MaxTransientVltg**					
34	Arrowhd 230	0.94 | 1.02	0.97 | 1.01	0.94 | 1.01	0.94 | 1.02	0.92 | 1.04
35	Boise 115	0.99 | 1.04	1.00 | 1.03	0.99 | 1.04	0.98 | 1.06	0.98 | 1.04
36	Dorsey 230	1.02 | 1.06	1.03 | 1.05	1.02 | 1.06	1.01 | 1.07	1.02 | 1.07
37	Forbes 230	0.97 | 1.03	0.99 | 1.01	0.97 | 1.02	0.96 | 1.02	0.92 | 1.02
38	Riverton 230	0.94 | 1.06	1.00 | 1.04	0.94 | 1.05	0.93 | 1.06	0.89 | 1.05
39	Coal Creek 230	1.00 | 1.11	0.96 | 1.11	0.90 | 1.15	1.00 | 1.10	0.99 | 1.14
40	Dickinson 345	0.96 | 1.03	0.95 | 1.03	0.93 | 1.05	0.95 | 1.03	0.97 | 1.06
41	Drayton 230	0.94 | 1.11	0.97 | 1.06	0.94 | 1.13	0.93 | 1.12	0.91 | 1.11
42	Groton 345	0.86 | 1.14	0.95 | 1.04	0.88 | 1.11	0.80 | 1.14	0.83 | 1.13
43	Tioga 230	0.98 | 1.05	1.00 | 1.05	0.98 | 1.05	0.95 | 1.06	0.99 | 1.06
44	Wahpeton 115	0.88 | 1.13	0.99 | 1.07	0.89 | 1.12	0.85 | 1.14	0.85 | 1.12
45	Watertown 345	0.91 | 1.12	0.99 | 1.04	0.93 | 1.09	0.87 | 1.12	0.88 | 1.11
46	**Dynamic Voltage Warnings**					
47		none	none			
48						
49						
50						
51						
52						
53						
54	Worst Case Angle Damping					
55	Dorsey SUVP / UdHold	/ 0.158		/ 0.175	/ 0.158	
56	Forbes DC Red (DCAR)	349%	413%	387%	306%	507%
57	K22W (max +dP @ t, d-ang)	30.6@(2.82498,-3.9)	10.2@(2.56665,-2.0)	21.4@(2.63332,-1.6)	42.1@(3.02498,-4.2)	81.6@(2.94165,-33.7)
58	K22W (max -dP @ t, d-ang)	19.9@(0.77500,2.1)	10.5@(0.73333,1.6)	26.7@(0.74166,4.2)	28.2@(0.95000,4.3)	14.5@(0.65000,2.6)
59	K22W (max d-ang @ t, dP)	-8.7@(3.43331,4.3)	3.4@(1.13333,-4.6)	9.0@(1.16666,-5.4)	11.2@(1.35000,-1.4)	-38.4@(2.38332,60.9)
60	**OS Rel Trip / Marg**					
61	MH - OH					
62	D602F at Forbes/Dorsey	162% / 253%	182% / 287%	161% / 251%	149% / 232%	115% / 177%
63	82R at Rugby/L20D at Drayton	999% / 584%	999% / 635%	999% / 626%	999% / 506%	999% / 506%
64	R50M / F3M	787% / 256%	846% / 281%	780% / 262%	757% / 242%	688% / 194%
65	B10T	129%	287%	135%	108%	77%
66	**FSCAPS (SS/Unav/Final)**					
67	Balta 230	(0 | 3 | 0)	(0 | 2 | 0)	(0 | 3 | 0)	(0 | 3 | 0)	(0 | 2 | 0)
68	Eau Cl 345 / Park Lk 115	(3 | 3 | 3) / (1 | 1 | 1)	(3 | 3 | 3) / (1 | 1 | 1)	(3 | 3 | 3) / (1 | 1 | 1)	(3 | 3 | 3) / (1 | 1 | 1)	(3 | 3 | 2) / (1 | 1 | 1)
69	Prairie 115 / Ramsey 230	(1 |12 | 2) / (0 | 0 | 0)	(1 | 7 | 4) / (0 | 0 | 0)	(1 | 8 | 2) / (0 | 0 | 0)	(1 |11 | 2) / (0 | 0 | 0)	(1 |11 | 2) / (0 | 0 | 0)
70	Roseau 230 / Running 230	(0 | 0 | 0) / (1 | 1 | 1)	(0 | 0 | 0) / (1 | 1 | 1)	(0 | 0 | 0) / (1 | 1 | 1)	(0 | 0 | 0) / (1 | 2 | 1)	(0 | 1 | 0) / (1 | 2 | 1)
71	Shey 115 / Split Rock 115	(2 | 5 | 0) / (2 | 2 | 2)	(2 | 3 | 3) / (2 | 2 | 2)	(2 | 5 | 1) / (2 | 2 | 2)	(2 | 5 | 0) / (2 | 2 | 2)	(2 | 5 | 0) / (2 | 2 | 2)
72	**Damping Performance**	N/A	N/A	N/A	N/A	N/A

Appendix A.4: Simulation Summary Tables for Baseline Analysis

1	**Case No.**	11	12	13	14	15
2	**Case Name**	b00-so09aa-el3	b00-so09aa-eq1	b00-so09aa-ev0	b00-so09aa-fd1	b00-so09aa-fd3
3	**Disturbance**	el3	eq1	ev0	fd1	fd3
4	**Prior Outage**	None	None	None	None	None
5	**Date/Time**	OCT 19 2007 11:24	OCT 19 2007 11:37	OCT 19 2007 11:28	OCT 19 2007 11:38	OCT 19 2007 11:29
6	**Comments**					
7						
8	**Steady State Flows**					
9	NDEX / EAST BIAS	2080 / 297	2080 / 297	2080 / 297	2080 / 297	2080 / 297
10	MHEX / L20D	2175 / 230	2175 / 230	2175 / 230	2175 / 230	2175 / 230
11	ECL-ARP / PRI-BYN	528 / 721	528 / 721	528 / 721	528 / 721	528 / 721
12	MWSI / MNEX	1249	1249	1249	1249	1249
13	D602F / F601C	1826 / 1898	1826 / 1898	1826 / 1898	1826 / 1898	1826 / 1898
14	B10T / MH>SPC	164 / 20	164 / 20	164 / 20	164 / 20	164 / 20
15	OH E-W / OH>MH	99 / -195	99 / -195	99 / -195	99 / -195	99 / -195
16	R50M / OH>MP	136 / 150	136 / 150	136 / 150	136 / 150	136 / 150
17	G82R	-18	-18	-18	-18	-18
18	Dorsey bipole / CU bipole	3228 / 1104	3228 / 1104	3228 / 1104	3228 / 1104	3228 / 1104
19	Dorsey Reserve / Wtrtn SVC	197 / -29	197 / -29	197 / -29	197 / -29	197 / -29
20	Forbes SVC / MSC	5 / 600	5 / 600	5 / 600	5 / 600	5 / 600
21	Arrowhd-Wstn/ RCDC	554 / 0	554 / 0	554 / 0	554 / 0	554 / 0
22	**Steady State Vltgs**					
23	Dorsey 500/Dorsey 230	1.039 / 1.045	1.039 / 1.045	1.039 / 1.045	1.039 / 1.045	1.039 / 1.045
24	Roseau 500/Forbes 500	1.069 / 0.991	1.069 / 0.991	1.069 / 0.991	1.069 / 0.991	1.069 / 0.991
25	Chisago 500/EauClaire 345	0.992 / 1.021	0.992 / 1.021	0.992 / 1.021	0.992 / 1.021	0.992 / 1.021
26	Int Falls 115/Badoura 115	1.021 / 1.025	1.021 / 1.025	1.021 / 1.025	1.021 / 1.025	1.021 / 1.025
27	Drayton 230/Groton 345	1.005 / 1.029	1.005 / 1.029	1.005 / 1.029	1.005 / 1.029	1.005 / 1.029
28	**SS OS Relay Margins**					
29	D602F at Forbes/Dorsey	218% / 347%	218% / 347%	218% / 347%	218% / 347%	218% / 347%
30	82R at Rugby/L20D at Drayton	999% / 862%	999% / 862%	999% / 862%	999% / 862%	999% / 862%
31	R50M/F3M	989% / 328%	989% / 328%	989% / 328%	989% / 328%	989% / 328%
32	B10T	336%	336%	336%	336%	336%
33	**Min/MaxTransientVltg**					
34	Arrowhd 230	0.95 | 1.01	0.94 | 1.03	0.99 | 1.03	0.99 | 1.03	0.92 | 1.02
35	Boise 115	1.00 | 1.04	0.99 | 1.04	0.99 | 1.03	0.99 | 1.04	0.98 | 1.05
36	Dorsey 230	1.03 | 1.06	1.03 | 1.06	1.03 | 1.06	1.02 | 1.06	1.01 | 1.06
37	Forbes 230	0.97 | 1.02	0.96 | 1.02	0.98 | 1.01	0.97 | 1.03	0.96 | 1.02
38	Riverton 230	0.95 | 1.04	0.93 | 1.05	0.96 | 1.04	0.95 | 1.06	0.93 | 1.06
39	Coal Creek 230	0.92 | 1.14	0.94 | 1.17	0.95 | 1.12	0.96 | 1.15	0.95 | 1.17
40	Dickinson 345	0.93 | 1.05	0.99 | 1.08	0.93 | 1.04	0.94 | 1.06	0.92 | 1.06
41	Drayton 230	0.96 | 1.11	0.97 | 1.10	0.97 | 1.10	0.95 | 1.11	0.94 | 1.12
42	Groton 345	0.89 | 1.10	0.86 | 1.12	0.89 | 1.07	0.88 | 1.11	0.83 | 1.14
43	Tioga 230	0.99 | 1.05	0.99 | 1.05	1.00 | 1.05	0.98 | 1.06	0.96 | 1.06
44	Wahpeton 115	0.91 | 1.10	0.89 | 1.11	0.91 | 1.08	0.87 | 1.12	0.84 | 1.14
45	Watertown 345	0.94 | 1.08	0.91 | 1.10	0.93 | 1.05	0.93 | 1.09	0.89 | 1.12
46	**Dynamic Voltage Warnings**					
47		none	none	none	63369 [JAMESTN3] 0.69	63199 [JAMSTN1Y] 0.65
48					63199 [JAMSTN1Y] 0.69	63200 [JAMSTN2Y] 0.65
49					63200 [JAMSTN2Y] 0.69	63369 [JAMESTN3] 0.65
50						63270 [LADISH 7] 0.67
51						63271 [AVIKO 7] 0.67
52						63272 [JAMESPK7] 0.67
53						273 [JAMETAP7] 0.67 +m
54	Worst Case Angle Damping					
55	Dorsey SUVP / UdHold	/ 0.175		/ 0.166		/ 0.166
56	Forbes DC Red (DCAR)	391%	507%	429%	344%	311%
57	K22W (max +dP @ t, d-ang)	20.1@(2.59165,-1.5)	46.5@(2.62499,-20.1)	13.2@(2.63332,-2.0)	19.4@(2.78332,-0.3)	41.3@(2.78332,-7.0)
58	K22W (max -dP @ t, d-ang)	23.0@(0.68333,3.1)	9.4@(0.49166,1.6)	20.5@(0.71666,2.2)	25.0@(0.92500,3.9)	29.6@(0.90833,7.5)
59	K22W (max d-ang @ t, dP)	7.5@(1.13333,-4.6)	-23.4@(2.15833,34.2)	6.2@(1.19166,-7.0)	7.8@(1.28333,-3.2)	12.5@(1.25000,-9.7)
60	**OS Rel Trip / Marg**					
61	MH - OH					
62	D602F at Forbes/Dorsey	167% / 261%	151% / 235%	158% / 246%	152% / 237%	147% / 229%
63	82R at Rugby/L20D at Drayton	999% / 669%	999% / 517%	999% / 757%	999% / 618%	999% / 521%
64	R50M / F3M	806% / 266%	782% / 230%	760% / 254%	745% / 247%	742% / 249%
65	B10T	158%	103%	221%	155%	98%
66	**FSCAPS (SS/Unav/Final)**					
67	Balta 230	(0 | 3 | 0)	(0 | 2 | 0)	(0 | 2 | 0)	(0 | 1 | 0)	(0 | 3 | 0)
68	Eau Cl 345 / Park Lk 115	(3 | 3 | 3) / (1 | 1 | 1)	(3 | 3 | 3) / (1 | 1 | 1)	(3 | 3 | 3) / (1 | 1 | 1)	(3 | 3 | 3) / (1 | 1 | 1)	(3 | 3 | 3) / (1 | 1 | 1)
69	Prairie 115 / Ramsey 230	(1 | 7 | 2) / (0 | 0 | 0)	(1 | 7 | 1) / (0 | 0 | 0)	(1 | 6 | 2) / (0 | 0 | 0)	(1 |10 | 3) / (0 | 0 | 0)	(1 |11 | 2) / (0 | 0 | 0)
70	Roseau 230 / Running 230	(0 | 0 | 0) / (1 | 1 | 1)	(0 | 0 | 0) / (1 | 1 | 1)	(0 | 0 | 0) / (1 | 1 | 1)	(0 | 0 | 0) / (1 | 1 | 1)	(0 | 1 | 0) / (1 | 2 | 1)
71	Shey 115 / Split Rock 115	(2 | 5 | 1) / (2 | 2 | 2)	(2 | 5 | 1) / (2 | 2 | 2)	(2 | 5 | 3) / (2 | 2 | 2)	(2 | 5 | 0) / (2 | 2 | 2)	(2 | 5 | 0) / (2 | 2 | 2)
72	**Damping Performance**	N/A	N/A	N/A	N/A	N/A

Appendix A.4: Simulation Summary Tables for Baseline Analysis

1	**Case No.**	16	17	18	19	20
2	**Case Name**	b00-so09aa-fd4	b00-so09aa-fd9	b00-so09aa-fdk	b00-so09aa-fdl	b00-so09aa-nbz
3	**Disturbance**	fd4	fd9	fdk	fdl	nbz
4	**Prior Outage**	None	None	None	None	None
5	**Date/Time**	OCT 19 2007 11:42	DEC 05 2007 15:46	OCT 19 2007 11:40	OCT 19 2007 11:44	OCT 19 2007 11:31
6	**Comments**					
7						
8	**Steady State Flows**					
9	NDEX / EAST BIAS	2080 / 297	2080 / 297	2080 / 297	2080 / 297	2080 / 297
10	MHEX / L20D	2175 / 230	2175 / 230	2175 / 230	2175 / 230	2175 / 230
11	ECL-ARP / PRI-BYN	528 / 721	528 / 721	528 / 721	528 / 721	528 / 721
12	MWSI / MNEX	1249	1249	1249	1249	1249
13	D602F / F601C	1826 / 1898	1826 / 1898	1826 / 1898	1826 / 1898	1826 / 1898
14	B10T / MH>SPC	164 / 20	164 / 20	164 / 20	164 / 20	164 / 20
15	OH E-W / OH>MH	99 / -195	99 / -195	99 / -195	99 / -195	99 / -195
16	R50M / OH>MP	136 / 150	136 / 150	136 / 150	136 / 150	136 / 150
17	G82R	-18	-18	-18	-18	-18
18	Dorsey bipole / CU bipole	3228 / 1104	3228 / 1104	3228 / 1104	3228 / 1104	3228 / 1104
19	Dorsey Reserve / Wtrtn SVC	197 / -29	197 / -29	197 / -29	197 / -29	197 / -29
20	Forbes SVC / MSC	5 / 600	5 / 600	5 / 600	5 / 600	5 / 600
21	Arrowhd-Wstn/ RCDC	554 / 0	554 / 0	554 / 0	554 / 0	554 / 0
22	**Steady State Vltgs**					
23	Dorsey 500/Dorsey 230	1.039 / 1.045	1.039 / 1.045	1.039 / 1.045	1.039 / 1.045	1.039 / 1.045
24	Roseau 500/Forbes 500	1.069 / 0.991	1.069 / 0.991	1.069 / 0.991	1.069 / 0.991	1.069 / 0.991
25	Chisago 500/EauClaire 345	0.992 / 1.021	0.992 / 1.021	0.992 / 1.021	0.992 / 1.021	0.992 / 1.021
26	Int Falls 115/Badoura 115	1.021 / 1.025	1.021 / 1.025	1.021 / 1.025	1.021 / 1.025	1.021 / 1.025
27	Drayton 230/Groton 345	1.005 / 1.029	1.005 / 1.029	1.005 / 1.029	1.005 / 1.029	1.005 / 1.029
28	**SS OS Relay Margins**					
29	D602F at Forbes/Dorsey	218% / 347%	218% / 347%	218% / 347%	218% / 347%	218% / 347%
30	82R at Rugby/L20D at Drayton	999% / 862%	999% / 862%	999% / 862%	999% / 862%	999% / 862%
31	R50M/F3M	989% / 328%	989% / 328%	989% / 328%	989% / 328%	989% / 328%
32	B10T	336%	336%	336%	336%	336%
33	**Min/MaxTransientVltg**					
34	Arrowhd 230	0.93 | 1.02	0.94 | 1.01	1.00 | 1.05	0.94 | 1.03	(0.65)0.72 | 1.06
35	Boise 115	0.99 | 1.04	1.00 | 1.03	1.00 | 1.03	1.00 | 1.04	0.96 | 1.05
36	Dorsey 230	1.02 | 1.06	1.02 | 1.06	1.03 | 1.06	1.03 | 1.06	1.05 | 1.21
37	Forbes 230	0.97 | 1.02	0.97 | 1.02	0.99 | 1.02	0.98 | 1.02	0.85 | 1.07
38	Riverton 230	0.95 | 1.06	0.95 | 1.05	0.99 | 1.05	0.98 | 1.05	0.77 | 1.06
39	Coal Creek 230	0.96 | 1.15	0.96 | 1.14	0.97 | 1.11	0.96 | 1.11	0.91 | 1.13
40	Dickinson 345	0.94 | 1.06	0.93 | 1.05	0.95 | 1.04	0.95 | 1.05	0.88 | 1.09
41	Drayton 230	0.95 | 1.12	0.96 | 1.08	0.98 | 1.05	0.97 | 1.08	0.96 | 1.10
42	Groton 345	0.89 | 1.13	0.90 | 1.11	0.97 | 1.11	0.96 | 1.12	0.81 | 1.09
43	Tioga 230	0.98 | 1.06	0.99 | 1.05	1.00 | 1.05	0.99 | 1.05	0.97 | 1.06
44	Wahpeton 115	0.88 | 1.14	0.90 | 1.12	0.97 | 1.11	0.96 | 1.12	0.83 | 1.09
45	Watertown 345	0.94 | 1.11	0.94 | 1.09	1.00 | 1.09	1.00 | 1.10	0.84 | 1.08
46	**Dynamic Voltage Warnings**					
47		63369 [JAMESTN3] 0.67	none	none	none	61614 [98L TAP4] 0.78
48		63199 [JAMSTN1Y] 0.68				61615 [ARROWHD4] 0.78
49		63200 [JAMSTN2Y] 0.68				61616 [HILLTOP4] 0.78
50		63270 [LADISH 7] 0.69				61673 [ARROWHD7] 0.79
51		63271 [AVIKO 7] 0.69				61674 [HANESRD7] 0.79
52		63272 [JAMESPK7] 0.69				61686 [15TH AV7] 0.79
53		273 [JAMETAP7] 0.69 +m				687 [MIDWAY 7] 0.79 +m
54	Worst Case Angle Damping					
55	Dorsey SUVP / UdHold		/ 0.166			/ 0.133
56	Forbes DC Red (DCAR)	340%	390%	476%	487%	507%
57	K22W (max +dP @ t, d-ang)	32.4@(2.74165,-5.9)	19.6@(2.64999,-1.3)	42.7@(2.48332,-16.8)	45.1@(2.48332,-15.9)	160.3@(2.67499,-62.1)
58	K22W (max -dP @ t, d-ang)	23.9@(0.88333,4.2)	18.6@(0.74166,3.0)	2.5@(0.30833,-0.2)	2.5@(0.32500,-0.2)	91.8@(0.24167,7.4)
59	K22W (max d-ang @ t, dP)	8.6@(1.24166,-1.2)	7.4@(1.15833,-4.4)	-19.0@(1.95000,30.8)	-18.6@(1.93333,29.8)	-63.4@(2.46666,143.2)
60	**OS Rel Trip / Marg**					
61	MH - OH					
62	D602F at Forbes/Dorsey	161% / 252%	169% / 266%	186% / 292%	185% / 291%	0.18333 sec / 0.18333 sec
63	82R at Rugby/L20D at Drayton	999% / 584%	999% / 634%	999% / 618%	999% / 553%	999% / 505%
64	R50M / F3M	792% / 256%	817% / 267%	832% / 243%	828% / 246%	558% / 135%
65	B10T	126%	152%	146%	120%	87%
66	**FSCAPS (SS/Unav/Final)**					
67	Balta 230	(0 | 1 | 0)	(0 | 2 | 0)	(0 | 0 | 0)	(0 | 0 | 0)	(0 | 2 | 0)
68	Eau Cl 345 / Park Lk 115	(3 | 3 | 3) / (1 | 1 | 1)	(3 | 3 | 3) / (1 | 1 | 1)	(3 | 3 | 3) / (1 | 1 | 1)	(3 | 3 | 3) / (1 | 1 | 1)	(3 | 3 | 1) / (1 | 1 | 1)
69	Prairie 115 / Ramsey 230	(1 | 8 | 2) / (0 | 0 | 0)	(1 | 7 | 2) / (0 | 0 | 0)	(1 | 4 | 2) / (0 | 0 | 0)	(1 | 6 | 1) / (0 | 0 | 0)	(1 | 6 | 1) / (0 | 0 | 0)
70	Roseau 230 / Running 230	(0 | 0 | 0) / (1 | 1 | 1)	(0 | 0 | 0) / (1 | 1 | 1)	(0 | 0 | 0) / (1 | 1 | 1)	(0 | 0 | 0) / (1 | 1 | 1)	(0 | 0 | 0) / (1 | 2 | 0)
71	Shey 115 / Split Rock 115	(2 | 5 | 0) / (2 | 2 | 2)	(2 | 5 | 1) / (2 | 2 | 2)	(2 | 5 | 0) / (2 | 2 | 2)	(2 | 5 | 0) / (2 | 2 | 2)	(2 | 5 | 2) / (2 | 2 | 2)
72	**Damping Performance**	N/A	N/A	N/A	N/A	N/A

Appendix A.4: Simulation Summary Tables for Baseline Analysis

1	**Case No.**	21	22	23	24	25
2	**Case Name**	b00-so09aa-nmz	b00-so09aa-pcs	b00-so09aa-pct	b00-so09aa-pys	b00-so09aa-pyt
3	**Disturbance**	nmz	pcs	pct	pys	pyt
4	**Prior Outage**	None	None	None	None	None
5	**Date/Time**	OCT 19 2007 12:06	OCT 19 2007 11:47	OCT 19 2007 11:52	OCT 19 2007 11:57	OCT 19 2007 12:02
6	**Comments**					
7						
8	**Steady State Flows**					
9	NDEX / EAST BIAS	2080 / 297	2080 / 297	2080 / 297	2080 / 297	2080 / 297
10	MHEX / L20D	2175 / 230	2175 / 230	2175 / 230	2175 / 230	2175 / 230
11	ECL-ARP / PRI-BYN	528 / 721	528 / 721	528 / 721	528 / 721	528 / 721
12	MWSI / MNEX	1249	1249	1249	1249	1249
13	D602F / F601C	1826 / 1898	1826 / 1898	1826 / 1898	1826 / 1898	1826 / 1898
14	B10T / MH>SPC	164 / 20	164 / 20	164 / 20	164 / 20	164 / 20
15	OH E-W / OH>MH	99 / -195	99 / -195	99 / -195	99 / -195	99 / -195
16	R50M / OH>MP	136 / 150	136 / 150	136 / 150	136 / 150	136 / 150
17	G82R	-18	-18	-18	-18	-18
18	Dorsey bipole / CU bipole	3228 / 1104	3228 / 1104	3228 / 1104	3228 / 1104	3228 / 1104
19	Dorsey Reserve / Wtrtn SVC	197 / -29	197 / -29	197 / -29	197 / -29	197 / -29
20	Forbes SVC / MSC	5 / 600	5 / 600	5 / 600	5 / 600	5 / 600
21	Arrowhd-Wstn/ RCDC	554 / 0	554 / 0	554 / 0	554 / 0	554 / 0
22	**Steady State Vltgs**					
23	Dorsey 500/Dorsey 230	1.039 / 1.045	1.039 / 1.045	1.039 / 1.045	1.039 / 1.045	1.039 / 1.045
24	Roseau 500/Forbes 500	1.069 / 0.991	1.069 / 0.991	1.069 / 0.991	1.069 / 0.991	1.069 / 0.991
25	Chisago 500/EauClaire 345	0.992 / 1.021	0.992 / 1.021	0.992 / 1.021	0.992 / 1.021	0.992 / 1.021
26	Int Falls 115/Badoura 115	1.021 / 1.025	1.021 / 1.025	1.021 / 1.025	1.021 / 1.025	1.021 / 1.025
27	Drayton 230/Groton 345	1.005 / 1.029	1.005 / 1.029	1.005 / 1.029	1.005 / 1.029	1.005 / 1.029
28	**SS OS Relay Margins**					
29	D602F at Forbes/Dorsey	218% / 347%	218% / 347%	218% / 347%	218% / 347%	218% / 347%
30	82R at Rugby/L20D at Drayton	999% / 862%	999% / 862%	999% / 862%	999% / 862%	999% / 862%
31	R50M/F3M	989% / 328%	989% / 328%	989% / 328%	989% / 328%	989% / 328%
32	B10T	336%	336%	336%	336%	336%
33	**Min/MaxTransientVltg**					
34	Arrowhd 230	(0.58)0.80 | 1.04	0.86 | 0.98	0.94 | 0.96	0.96 | 1.00	0.98 | 1.00
35	Boise 115	0.96 | 1.05	0.99 | 1.05	1.02 | 1.03	1.00 | 1.05	1.02 | 1.03
36	Dorsey 230	1.05 | 1.21	1.02 | 1.09	1.04 | 1.05	1.02 | 1.07	1.04 | 1.05
37	Forbes 230	0.95 | 1.02	0.98 | 1.02	0.99 | 1.00	0.99 | 1.04	1.00 | 1.01
38	Riverton 230	0.81 | 1.04	0.99 | 1.03	1.01 | 1.02	1.00 | 1.03	1.01 | 1.03
39	Coal Creek 230	0.91 | 1.13	0.96 | 1.07	1.02 | 1.04	0.98 | 1.07	1.02 | 1.05
40	Dickinson 345	0.89 | 1.08	0.95 | 1.04	0.98 | 1.01	0.97 | 1.04	0.99 | 1.01
41	Drayton 230	0.96 | 1.09	0.99 | 1.04	1.00 | 1.01	0.98 | 1.02	1.00 | 1.02
42	Groton 345	0.83 | 1.08	0.98 | 1.04	1.02 | 1.04	0.99 | 1.04	1.02 | 1.03
43	Tioga 230	0.98 | 1.06	0.98 | 1.03	1.02 | 1.03	0.99 | 1.03	1.02 | 1.03
44	Wahpeton 115	0.85 | 1.09	1.00 | 1.07	1.04 | 1.05	1.01 | 1.06	1.04 | 1.05
45	Watertown 345	0.86 | 1.07	1.00 | 1.04	1.03 | 1.04	1.01 | 1.04	1.03 | 1.04
46	**Dynamic Voltage Warnings**					
47		61615 [ARROWHD4] 0.80	none	none	none	none
48		61614 [98L TAP4] 0.80				
49		61616 [HILLTOP4] 0.80				
50		61673 [ARROWHD7] 0.81				
51		61674 [HANESRD7] 0.81				
52		61675 [RIDGEVW7] 0.81				
53		686 [15TH AV7] 0.81 +mo				
54	Worst Case Angle Damping		SHERC3 / 67.88%	SHERC3 / 55.86%	SHERC3 / 72.62%	SHERC3 / 59.73%
55	Dorsey SUVP / UdHold	/ 0.133				
56	Forbes DC Red (DCAR)	507%	166%	309%	154%	345%
57	K22W (max +dP @ t, d-ang)	148.0@(2.61665,-59.6)	7.0@(3.53331,2.1)	0.0@(0.04167,0.0)	7.7@(3.51664,0.0)	0.0@(0.04167,0.0)
58	K22W (max -dP @ t, d-ang)	92.9@(0.23333,7.1)	51.5@(1.73333,18.6)	27.4@(2.27499,12.6)	36.1@(1.71666,11.6)	19.6@(1.85833,8.8)
59	K22W (max d-ang @ t, dP)	-60.8@(2.41666,137.5)	28.3@(1.14166,-41.0)	12.6@(2.17499,-27.3)	21.2@(1.12500,-25.3)	9.2@(2.15833,-18.9)
60	**OS Rel Trip / Marg**					
61	MH - OH					
62	D602F at Forbes/Dorsey	0.18333 sec / 0.18333 sec	166% / 258%	218% / 347%	166% / 258%	218% / 347%
63	82R at Rugby/L20D at Drayton	999% / 526%	999% / 578%	999% / 793%	999% / 624%	999% / 795%
64	R50M / F3M	538% / 160%	677% / 328%	912% / 328%	731% / 307%	956% / 328%
65	B10T	100%	150%	294%	174%	280%
66	**FSCAPS (SS/Unav/Final)**					
67	Balta 230	(0 | 2 | 0)	(0 | 0 | 0)	(0 | 0 | 0)	(0 | 0 | 0)	(0 | 0 | 0)
68	Eau Cl 345 / Park Lk 115	(3 | 3 | 1) / (1 | 1 | 1)	(3 | 4 | 2) / (1 | 3 | 3)	(3 | 3 | 2) / (1 | 1 | 1)	(3 | 4 | 4) / (1 | 3 | 3)	(3 | 3 | 3) / (1 | 1 | 1)
69	Prairie 115 / Ramsey 230	(1 | 4 | 1) / (0 | 0 | 0)	(1 | 3 | 2) / (0 | 0 | 0)	(1 | 1 | 1) / (0 | 0 | 0)	(1 | 1 | 1) / (0 | 0 | 0)	(1 | 1 | 1) / (0 | 0 | 0)
70	Roseau 230 / Running 230	(0 | 0 | 0) / (1 | 4 | 1)	(0 | 0 | 0) / (1 | 1 | 1)	(0 | 0 | 0) / (1 | 1 | 1)	(0 | 0 | 0) / (1 | 1 | 1)	(0 | 0 | 0) / (1 | 1 | 1)
71	Shey 115 / Split Rock 115	(2 | 5 | 2) / (2 | 2 | 2)	(2 | 3 | 3) / (2 | 2 | 2)	(2 | 2 | 2) / (2 | 2 | 2)	(2 | 2 | 2) / (2 | 2 | 2)	(2 | 2 | 2) / (2 | 2 | 2)
72	**Damping Performance**	N/A	N/A	N/A	N/A	N/A

Appendix A.4: Simulation Summary Tables for Baseline Analysis

1	**Case No.**	26
2	**Case Name**	b00-so09aa-ya3
3	**Disturbance**	ya3
4	**Prior Outage**	None
5	**Date/Time**	OCT 19 2007 11:33
6	**Comments**	
7		
8	**Steady State Flows**	
9	NDEX / EAST BIAS	2080 / 297
10	MHEX / L20D	2175 / 230
11	ECL-ARP / PRI-BYN	528 / 721
12	MWSI / MNEX	1249
13	D602F / F601C	1826 / 1898
14	B10T / MH>SPC	164 / 20
15	OH E-W / OH>MH	99 / -195
16	R50M / OH>MP	136 / 150
17	G82R	-18
18	Dorsey bipole / CU bipole	3228 / 1104
19	Dorsey Reserve / Wtrtn SVC	197 / -29
20	Forbes SVC / MSC	5 / 600
21	Arrowhd-Wstn/ RCDC	554 / 0
22	**Steady State Vltgs**	
23	Dorsey 500/Dorsey 230	1.039 / 1.045
24	Roseau 500/Forbes 500	1.069 / 0.991
25	Chisago 500/EauClaire 345	0.992 / 1.021
26	Int Falls 115/Badoura 115	1.021 / 1.025
27	Drayton 230/Groton 345	1.005 / 1.029
28	**SS OS Relay Margins**	
29	D602F at Forbes/Dorsey	218% / 347%
30	82R at Rugby/L20D at Drayton	999% / 862%
31	R50M/F3M	989% / 328%
32	B10T	336%
33	**Min/MaxTransientVltg**	
34	Arrowhd 230	0.98 | 0.99
35	Boise 115	1.02 | 1.04
36	Dorsey 230	1.04 | 1.06
37	Forbes 230	0.99 | 1.00
38	Riverton 230	1.00 | 1.01
39	Coal Creek 230	1.02 | 1.05
40	Dickinson 345	0.97 | 1.00
41	Drayton 230	1.00 | 1.02
42	Groton 345	1.01 | 1.03
43	Tioga 230	1.02 | 1.03
44	Wahpeton 115	1.03 | 1.05
45	Watertown 345	1.02 | 1.03
46	**Dynamic Voltage Warnings**	
47		none
48		
49		
50		
51		
52		
53		
54	Worst Case Angle Damping	
55	Dorsey SUVP / UdHold	
56	Forbes DC Red (DCAR)	398%
57	K22W (max +dP @ t, d-ang)	3.2@(0.11667,0.6)
58	K22W (max -dP @ t, d-ang)	26.5@(1.70000,12.3)
59	K22W (max d-ang @ t, dP)	12.5@(1.96666,-23.0)
60	**OS Rel Trip / Marg**	
61	MH - OH	
62	D602F at Forbes/Dorsey	211% / 338%
63	82R at Rugby/L20D at Drayton	999% / 749%
64	R50M / F3M	988% / 328%
65	B10T	268%
66	**FSCAPS (SS/Unav/Final)**	
67	Balta 230	(0 | 0 | 0)
68	Eau Cl 345 / Park Lk 115	(3 | 4 | 4) / (1 | 1 | 1)
69	Prairie 115 / Ramsey 230	(1 | 1 | 1) / (0 | 0 | 0)
70	Roseau 230 / Running 230	(0 | 0 | 0) / (1 | 1 | 1)
71	Shey 115 / Split Rock 115	(2 | 2 | 2) / (2 | 2 | 2)
72	**Damping Performance**	N/A

Appendix A.5 - Simulation Summary Tables With 100 MW GI-0503

1	**Case No.**	1	2	3	4	5
2	**Case Name**	b01-so09aa-zss	b01-so09aa-ac3	b01-so09aa-ad3	b01-so09aa-ag1	b01-so09aa-ag3
3	**Disturbance**	zss	ac3	ad3	ag1	ag3
4	**Prior Outage**	None	None	None	None	None
5	**Date/Time**	NOV 09 2007 14:59	OCT 17 2007 17:18	OCT 17 2007 17:20	OCT 17 2007 17:46	OCT 17 2007 17:22
6	**Comments**					
7						
8	**Steady State Flows**					
9	NDEX / EAST BIAS	2080 / 293	2080 / 293	2080 / 293	2080 / 293	2080 / 293
10	MHEX / L20D	2175 / 235	2175 / 235	2175 / 235	2175 / 235	2175 / 235
11	ECL-ARP / PRI-BYN	528 / 721	528 / 721	528 / 721	528 / 721	528 / 721
12	MWSI / MNEX	1249	1249	1249	1249	1249
13	D602F / F601C	1826 / 1895	1826 / 1895	1826 / 1895	1826 / 1895	1826 / 1895
14	B10T / MH>SPC	164 / 20	164 / 20	164 / 20	164 / 20	164 / 20
15	OH E-W / OH>MH	99 / -195	99 / -195	99 / -195	99 / -195	99 / -195
16	R50M / OH>MP	137 / 150	137 / 150	137 / 150	137 / 150	137 / 150
17	G82R	-23	-23	-23	-23	-23
18	Dorsey bipole / CU bipole	3228 / 1104	3228 / 1104	3228 / 1104	3228 / 1104	3228 / 1104
19	Dorsey Reserve / Wtrtn SVC	198 / 17	198 / 17	198 / 17	198 / 17	198 / 17
20	Forbes SVC / MSC	5 / 600	5 / 600	5 / 600	5 / 600	5 / 600
21	Arrowhd-Wstn/ RCDC	554 / 0	554 / 0	554 / 0	554 / 0	554 / 0
22	**Steady State Vltgs**					
23	Dorsey 500/Dorsey 230	1.039 / 1.045	1.039 / 1.045	1.039 / 1.045	1.039 / 1.045	1.039 / 1.045
24	Roseau 500/Forbes 500	1.069 / 0.991	1.069 / 0.991	1.069 / 0.991	1.069 / 0.991	1.069 / 0.991
25	Chisago 500/EauClaire 345	0.992 / 1.020	0.992 / 1.020	0.992 / 1.020	0.992 / 1.020	0.992 / 1.020
26	Int Falls 115/Badoura 115	1.021 / 1.025	1.021 / 1.025	1.021 / 1.025	1.021 / 1.025	1.021 / 1.025
27	Drayton 230/Groton 345	1.008 / 1.030	1.008 / 1.030	1.008 / 1.030	1.008 / 1.030	1.008 / 1.030
28	**SS OS Relay Margins**					
29	D602F at Forbes/Dorsey	218% / 347%	218% / 347%	218% / 347%	218% / 347%	218% / 347%
30	82R at Rugby/L20D at Drayton	999% / 847%	999% / 847%	999% / 847%	999% / 847%	999% / 847%
31	R50M/F3M	988% / 328%	988% / 328%	988% / 328%	988% / 328%	988% / 328%
32	B10T	335%	335%	335%	335%	335%
33	**Min/MaxTransientVltg**					
34	Arrowhd 230	1.00 | 1.00	0.96 | 1.01	0.97 | 1.01	0.96 | 1.00	0.95 | 1.01
35	Boise 115	1.02 | 1.02	0.99 | 1.03	1.00 | 1.03	0.99 | 1.03	0.99 | 1.04
36	Dorsey 230	1.04 | 1.04	1.02 | 1.06	1.03 | 1.06	1.02 | 1.06	1.02 | 1.06
37	Forbes 230	1.00 | 1.00	0.98 | 1.01	0.98 | 1.02	0.98 | 1.01	0.98 | 1.01
38	Riverton 230	1.01 | 1.01	0.97 | 1.04	0.99 | 1.05	0.97 | 1.04	0.97 | 1.04
39	Coal Creek 230	1.03 | 1.03	0.95 | 1.12	0.96 | 1.12	0.95 | 1.12	0.95 | 1.12
40	Dickinson 345	1.00 | 1.00	0.94 | 1.04	0.94 | 1.04	0.93 | 1.04	0.93 | 1.04
41	Drayton 230	1.01 | 1.01	0.96 | 1.10	0.98 | 1.08	0.96 | 1.09	0.95 | 1.09
42	Groton 345	1.03 | 1.03	0.85 | 1.06	0.90 | 1.08	0.85 | 1.07	0.85 | 1.07
43	Tioga 230	1.02 | 1.02	0.97 | 1.05	0.98 | 1.05	0.98 | 1.06	0.98 | 1.05
44	Wahpeton 115	1.04 | 1.04	0.93 | 1.09	0.97 | 1.10	0.94 | 1.10	0.93 | 1.09
45	Watertown 345	1.03 | 1.03	0.94 | 1.05	0.95 | 1.06	0.93 | 1.06	0.93 | 1.05
46	**Dynamic Voltage Warnings**					
47		none	none	none	none	none
48						
49						
50						
51						
52						
53						
54	Worst Case Angle Damping					
55	Dorsey SUVP / UdHold					
56	Forbes DC Red (DCAR)	507%	413%	392%	411%	406%
57	K22W (max +dP @ t, d-ang)	0.0@(2.58332,0.0)	12.9@(2.63332,0.8)	15.2@(2.49166,-1.1)	11.0@(2.62499,2.6)	13.3@(2.59999,1.7)
58	K22W (max -dP @ t, d-ang)	0.0@(4.94995,0.0)	24.7@(0.82500,6.7)	15.2@(0.66666,3.0)	24.8@(0.83333,6.3)	25.5@(0.79166,7.1)
59	K22W (max d-ang @ t, dP)	0.0@(3.16665,0.0)	10.0@(1.15833,-9.3)	5.7@(1.04166,-2.6)	9.7@(1.16666,-7.7)	10.6@(1.11666,-9.7)
60	**OS Rel Trip / Marg**					
61	MH - OH					
62	D602F at Forbes/Dorsey	218% / 347%	157% / 244%	178% / 280%	160% / 249%	157% / 243%
63	82R at Rugby/L20D at Drayton	999% / 847%	999% / 656%	999% / 681%	999% / 632%	999% / 643%
64	R50M / F3M	988% / 328%	754% / 266%	835% / 274%	761% / 266%	749% / 264%
65	B10T	335%	179%	186%	172%	168%
66	**FSCAPS (SS/Unav/Final)**					
67	Balta 230	(0 | 0 | 0)	(0 | 3 | 0)	(0 | 1 | 0)	(0 | 3 | 0)	(0 | 3 | 0)
68	Eau Cl 345 / Park Lk 115	(3 | 3 | 3) / (1 | 1 | 1)	(3 | 3 | 3) / (1 | 1 | 1)	(3 | 3 | 3) / (1 | 1 | 1)	(3 | 3 | 3) / (1 | 1 | 1)	(3 | 3 | 3) / (1 | 1 | 1)
69	Prairie 115 / Ramsey 230	(1 | 1 | 1) / (0 | 0 | 0)	(1 | 7 | 2) / (0 | 0 | 0)	(1 | 4 | 1) / (0 | 0 | 0)	(1 | 7 | 2) / (0 | 0 | 0)	(1 | 7 | 2) / (0 | 0 | 0)
70	Roseau 230 / Running 230	(0 | 0 | 0) / (1 | 1 | 1)	(0 | 0 | 0) / (1 | 1 | 1)	(0 | 0 | 0) / (1 | 1 | 1)	(0 | 0 | 0) / (1 | 1 | 1)	(0 | 0 | 0) / (1 | 1 | 1)
71	Shey 115 / Split Rock 115	(2 | 2 | 2) / (2 | 2 | 2)	(2 | 5 | 3) / (2 | 2 | 2)	(2 | 5 | 1) / (2 | 2 | 2)	(2 | 5 | 2) / (2 | 2 | 2)	(2 | 5 | 3) / (2 | 2 | 2)
72	**Damping Performance**	N/A	N/A	N/A	N/A	N/A

Appendix A.5 - Simulation Summary Tables With 100 MW GI-0503

1	**Case No.**	6	7	8	9	10
2	**Case Name**	b01-so09aa-bl3	b01-so09aa-eb3	b01-so09aa-ec3	b01-so09aa-ef3	b01-so09aa-ei2
3	**Disturbance**	bl3	eb3	ec3	ef3	ei2
4	**Prior Outage**	None	None	None	None	None
5	**Date/Time**	OCT 17 2007 17:23	OCT 17 2007 17:26	OCT 17 2007 17:27	OCT 17 2007 17:29	OCT 17 2007 17:33
6	**Comments**					
7						
8	**Steady State Flows**					
9	NDEX / EAST BIAS	2080 / 293	2080 / 293	2080 / 293	2080 / 293	2080 / 293
10	MHEX / L20D	2175 / 235	2175 / 235	2175 / 235	2175 / 235	2175 / 235
11	ECL-ARP / PRI-BYN	528 / 721	528 / 721	528 / 721	528 / 721	528 / 721
12	MWSI / MNEX	1249	1249	1249	1249	1249
13	D602F / F601C	1826 / 1895	1826 / 1895	1826 / 1895	1826 / 1895	1826 / 1895
14	B10T / MH>SPC	164 / 20	164 / 20	164 / 20	164 / 20	164 / 20
15	OH E-W / OH>MH	99 / -195	99 / -195	99 / -195	99 / -195	99 / -195
16	R50M / OH>MP	137 / 150	137 / 150	137 / 150	137 / 150	137 / 150
17	G82R	-23	-23	-23	-23	-23
18	Dorsey bipole / CU bipole	3228 / 1104	3228 / 1104	3228 / 1104	3228 / 1104	3228 / 1104
19	Dorsey Reserve / Wtrtn SVC	198 / 17	198 / 17	198 / 17	198 / 17	198 / 17
20	Forbes SVC / MSC	5 / 600	5 / 600	5 / 600	5 / 600	5 / 600
21	Arrowhd-Wstn/ RCDC	554 / 0	554 / 0	554 / 0	554 / 0	554 / 0
22	**Steady State VItgs**					
23	Dorsey 500/Dorsey 230	1.039 / 1.045	1.039 / 1.045	1.039 / 1.045	1.039 / 1.045	1.039 / 1.045
24	Roseau 500/Forbes 500	1.069 / 0.991	1.069 / 0.991	1.069 / 0.991	1.069 / 0.991	1.069 / 0.991
25	Chisago 500/EauClaire 345	0.992 / 1.020	0.992 / 1.020	0.992 / 1.020	0.992 / 1.020	0.992 / 1.020
26	Int Falls 115/Badoura 115	1.021 / 1.025	1.021 / 1.025	1.021 / 1.025	1.021 / 1.025	1.021 / 1.025
27	Drayton 230/Groton 345	1.008 / 1.030	1.008 / 1.030	1.008 / 1.030	1.008 / 1.030	1.008 / 1.030
28	**SS OS Relay Margins**					
29	D602F at Forbes/Dorsey	218% / 347%	218% / 347%	218% / 347%	218% / 347%	218% / 347%
30	82R at Rugby/L20D at Drayton	999% / 847%	999% / 847%	999% / 847%	999% / 847%	999% / 847%
31	R50M/F3M	988% / 328%	988% / 328%	988% / 328%	988% / 328%	988% / 328%
32	B10T	335%	335%	335%	335%	335%
33	**Min/MaxTransientVItg**					
34	Arrowhd 230	0.94 | 1.02	0.97 | 1.01	0.94 | 1.01	0.94 | 1.02	0.91 | 1.04
35	Boise 115	0.99 | 1.04	1.00 | 1.03	0.99 | 1.04	0.98 | 1.06	0.98 | 1.05
36	Dorsey 230	1.02 | 1.06	1.03 | 1.05	1.02 | 1.06	1.01 | 1.07	1.02 | 1.07
37	Forbes 230	0.96 | 1.03	0.99 | 1.01	0.97 | 1.02	0.96 | 1.02	0.92 | 1.02
38	Riverton 230	0.94 | 1.06	0.99 | 1.04	0.94 | 1.04	0.93 | 1.06	0.88 | 1.05
39	Coal Creek 230	1.00 | 1.11	0.96 | 1.11	0.90 | 1.14	1.00 | 1.10	0.99 | 1.13
40	Dickinson 345	0.96 | 1.03	0.95 | 1.03	0.93 | 1.05	0.95 | 1.03	0.97 | 1.06
41	Drayton 230	0.94 | 1.12	0.96 | 1.05	0.94 | 1.13	0.93 | 1.13	0.91 | 1.11
42	Groton 345	0.84 | 1.13	0.94 | 1.04	0.87 | 1.11	0.78 | 1.14	0.82 | 1.12
43	Tioga 230	0.98 | 1.05	1.00 | 1.04	0.98 | 1.05	0.96 | 1.05	0.98 | 1.05
44	Wahpeton 115	0.87 | 1.13	0.97 | 1.07	0.88 | 1.11	0.84 | 1.14	0.83 | 1.11
45	Watertown 345	0.89 | 1.11	0.98 | 1.04	0.91 | 1.08	0.85 | 1.11	0.86 | 1.10
46	**Dynamic Voltage Warnings**					
47			none			
48						
49						
50						
51						
52						
53						
54	Worst Case Angle Damping					
55	Dorsey SUVP / UdHold	/ 0.158		/ 0.175	/ 0.158	
56	Forbes DC Red (DCAR)	334%	409%	388%	287%	507%
57	K22W (max +dP @ t, d-ang)	30.7@(2.86665,-3.4)	12.2@(2.58332,-2.7)	21.3@(2.64999,-1.7)	43.6@(3.04998,-4.1)	82.7@(2.97498,-33.7)
58	K22W (max -dP @ t, d-ang)	22.2@(0.80833,2.9)	11.7@(0.80000,2.3)	27.7@(0.75000,4.6)	30.7@(0.96666,5.4)	15.9@(0.66666,2.8)
59	K22W (max d-ang @ t, dP)	-8.9@(3.48331,4.1)	-3.8@(2.99998,2.5)	9.8@(1.18333,-6.7)	12.9@(1.36666,-4.2)	-38.5@(2.41666,59.8)
60	**OS Rel Trip / Marg**					
61	MH - OH					
62	D602F at Forbes/Dorsey	158% / 247%	180% / 283%	158% / 246%	145% / 224%	113% / 173%
63	82R at Rugby/L20D at Drayton	999% / 563%	999% / 618%	999% / 611%	999% / 483%	999% / 490%
64	R50M / F3M	782% / 255%	841% / 278%	770% / 261%	737% / 240%	679% / 192%
65	B10T	124%	281%	135%	101%	75%
66	**FSCAPS (SS/Unav/Final)**					
67	Balta 230	(0 | 3 | 0)	(0 | 2 | 0)	(0 | 3 | 0)	(0 | 3 | 0)	(0 | 2 | 0)
68	Eau Cl 345 / Park Lk 115	(3 | 3 | 3) / (1 | 1 | 1)	(3 | 3 | 3) / (1 | 1 | 1)	(3 | 3 | 3) / (1 | 1 | 1)	(3 | 3 | 3) / (1 | 1 | 1)	(3 | 3 | 2) / (1 | 1 | 1)
69	Prairie 115 / Ramsey 230	(1 |12 | 2) / (0 | 0 | 0)	(1 |10 | 4) / (0 | 0 | 0)	(1 | 7 | 1) / (0 | 0 | 0)	(1 |12 | 2) / (0 | 0 | 0)	(1 |11 | 2) / (0 | 0 | 0)
70	Roseau 230 / Running 230	(0 | 0 | 0) / (1 | 1 | 1)	(0 | 0 | 0) / (1 | 1 | 1)	(0 | 0 | 0) / (1 | 1 | 1)	(0 | 1 | 0) / (1 | 2 | 1)	(0 | 1 | 0) / (1 | 2 | 1)
71	Shey 115 / Split Rock 115	(2 | 5 | 0) / (2 | 2 | 2)	(2 | 4 | 4) / (2 | 2 | 2)	(2 | 5 | 2) / (2 | 2 | 2)	(2 | 5 | 0) / (2 | 2 | 2)	(2 | 5 | 0) / (2 | 2 | 2)
72	**Damping Performance**	N/A	N/A	N/A	N/A	N/A

Appendix A.5 - Simulation Summary Tables With 100 MW GI-0503

1	**Case No.**	11	12	13	14	15
2	**Case Name**	b01-so09aa-el3	b01-so09aa-eq1	b01-so09aa-ev0	b01-so09aa-fd1	b01-so09aa-fd3
3	**Disturbance**	el3	eq1	ev0	fd1	fd3
4	**Prior Outage**	None	None	None	None	None
5	**Date/Time**	OCT 17 2007 17:31	OCT 17 2007 17:47	OCT 17 2007 17:35	OCT 17 2007 17:49	OCT 17 2007 17:37
6	**Comments**					
7						
8	**Steady State Flows**					
9	NDEX / EAST BIAS	2080 / 293	2080 / 293	2080 / 293	2080 / 293	2080 / 293
10	MHEX / L20D	2175 / 235	2175 / 235	2175 / 235	2175 / 235	2175 / 235
11	ECL-ARP / PRI-BYN	528 / 721	528 / 721	528 / 721	528 / 721	528 / 721
12	MWSI / MNEX	1249	1249	1249	1249	1249
13	D602F / F601C	1826 / 1895	1826 / 1895	1826 / 1895	1826 / 1895	1826 / 1895
14	B10T / MH>SPC	164 / 20	164 / 20	164 / 20	164 / 20	164 / 20
15	OH E-W / OH>MH	99 / -195	99 / -195	99 / -195	99 / -195	99 / -195
16	R50M / OH>MP	137 / 150	137 / 150	137 / 150	137 / 150	137 / 150
17	G82R	-23	-23	-23	-23	-23
18	Dorsey bipole / CU bipole	3228 / 1104	3228 / 1104	3228 / 1104	3228 / 1104	3228 / 1104
19	Dorsey Reserve / Wtrtn SVC	198 / 17	198 / 17	198 / 17	198 / 17	198 / 17
20	Forbes SVC / MSC	5 / 600	5 / 600	5 / 600	5 / 600	5 / 600
21	Arrowhd-Wstn/ RCDC	554 / 0	554 / 0	554 / 0	554 / 0	554 / 0
22	**Steady State Vltgs**					
23	Dorsey 500/Dorsey 230	1.039 / 1.045	1.039 / 1.045	1.039 / 1.045	1.039 / 1.045	1.039 / 1.045
24	Roseau 500/Forbes 500	1.069 / 0.991	1.069 / 0.991	1.069 / 0.991	1.069 / 0.991	1.069 / 0.991
25	Chisago 500/EauClaire 345	0.992 / 1.020	0.992 / 1.020	0.992 / 1.020	0.992 / 1.020	0.992 / 1.020
26	Int Falls 115/Badoura 115	1.021 / 1.025	1.021 / 1.025	1.021 / 1.025	1.021 / 1.025	1.021 / 1.025
27	Drayton 230/Groton 345	1.008 / 1.030	1.008 / 1.030	1.008 / 1.030	1.008 / 1.030	1.008 / 1.030
28	**SS OS Relay Margins**					
29	D602F at Forbes/Dorsey	218% / 347%	218% / 347%	218% / 347%	218% / 347%	218% / 347%
30	82R at Rugby/L20D at Drayton	999% / 847%	999% / 847%	999% / 847%	999% / 847%	999% / 847%
31	R50M/F3M	988% / 328%	988% / 328%	988% / 328%	988% / 328%	988% / 328%
32	B10T	335%	335%	335%	335%	335%
33	**Min/MaxTransientVltg**					
34	Arrowhd 230	0.94 | 1.01	0.94 | 1.03	0.99 | 1.03	0.99 | 1.03	0.92 | 1.02
35	Boise 115	0.99 | 1.04	0.99 | 1.04	0.99 | 1.03	0.99 | 1.05	0.98 | 1.05
36	Dorsey 230	1.03 | 1.06	1.03 | 1.06	1.03 | 1.05	1.02 | 1.06	1.01 | 1.06
37	Forbes 230	0.97 | 1.02	0.96 | 1.02	0.98 | 1.02	0.97 | 1.03	0.96 | 1.02
38	Riverton 230	0.95 | 1.04	0.93 | 1.05	0.96 | 1.04	0.95 | 1.06	0.92 | 1.06
39	Coal Creek 230	0.93 | 1.14	0.95 | 1.16	0.95 | 1.12	0.97 | 1.15	0.95 | 1.16
40	Dickinson 345	0.93 | 1.05	0.99 | 1.08	0.93 | 1.04	0.94 | 1.06	0.92 | 1.06
41	Drayton 230	0.97 | 1.11	0.98 | 1.10	0.97 | 1.10	0.96 | 1.11	0.94 | 1.13
42	Groton 345	0.88 | 1.10	0.85 | 1.11	0.88 | 1.06	0.87 | 1.10	0.81 | 1.13
43	Tioga 230	0.99 | 1.05	0.99 | 1.05	1.00 | 1.05	0.99 | 1.06	0.97 | 1.06
44	Wahpeton 115	0.90 | 1.10	0.89 | 1.10	0.90 | 1.07	0.87 | 1.12	0.83 | 1.14
45	Watertown 345	0.92 | 1.08	0.90 | 1.09	0.92 | 1.05	0.92 | 1.08	0.87 | 1.11
46	**Dynamic Voltage Warnings**					
47		none	none	none	63369 [JAMESTN3] 0.68	63199 [JAMSTN1Y] 0.64
48					63199 [JAMSTN1Y] 0.69	63200 [JAMSTN2Y] 0.64
49					63200 [JAMSTN2Y] 0.69	63369 [JAMESTN3] 0.64
50						63270 [LADISH 7] 0.65
51						63271 [AVIKO 7] 0.65
52						63272 [JAMESPK7] 0.65
53						69 [JAMSTWN7] 0.66 +m
54	Worst Case Angle Damping					
55	Dorsey SUVP / UdHold	/ 0.175		/ 0.166		/ 0.166
56	Forbes DC Red (DCAR)	390%	507%	424%	339%	292%
57	K22W (max +dP @ t, d-ang)	19.6@(2.60832,-1.5)	46.6@(2.65832,-20.0)	14.3@(2.66665,-2.5)	18.8@(2.79998,-1.1)	41.8@(2.79998,-6.8)
58	K22W (max -dP @ t, d-ang)	24.0@(0.69166,3.4)	9.6@(0.49166,1.6)	21.5@(0.73333,2.5)	26.1@(0.92500,4.1)	31.9@(0.91666,8.2)
59	K22W (max d-ang @ t, dP)	8.2@(1.15000,-5.4)	-23.4@(2.18333,34.4)	7.0@(1.21666,-7.8)	8.4@(1.29166,-4.1)	13.7@(1.26666,-10.7)
60	**OS Rel Trip / Marg**					
61	MH - OH					
62	D602F at Forbes/Dorsey	164% / 255%	151% / 235%	154% / 239%	150% / 233%	143% / 222%
63	82R at Rugby/L20D at Drayton	999% / 653%	999% / 518%	999% / 723%	999% / 616%	999% / 504%
64	R50M / F3M	794% / 264%	779% / 229%	744% / 251%	736% / 246%	724% / 247%
65	B10T	158%	105%	219%	155%	95%
66	**FSCAPS (SS/Unav/Final)**					
67	Balta 230	(0 | 3 | 0)	(0 | 2 | 0)	(0 | 2 | 0)	(0 | 1 | 0)	(0 | 3 | 0)
68	Eau Cl 345 / Park Lk 115	(3 | 3 | 3) / (1 | 1 | 1)	(3 | 3 | 3) / (1 | 1 | 1)	(3 | 3 | 3) / (1 | 1 | 1)	(3 | 3 | 3) / (1 | 1 | 1)	(3 | 3 | 3) / (1 | 1 | 1)
69	Prairie 115 / Ramsey 230	(1 | 6 | 1) / (0 | 0 | 0)	(1 | 7 | 1) / (0 | 0 | 0)	(1 | 7 | 2) / (0 | 0 | 0)	(1 | 8 | 2) / (0 | 0 | 0)	(1 |10 | 2) / (0 | 0 | 0)
70	Roseau 230 / Running 230	(0 | 0 | 0) / (1 | 1 | 1)	(0 | 0 | 0) / (1 | 1 | 1)	(0 | 0 | 0) / (1 | 1 | 1)	(0 | 0 | 0) / (1 | 2 | 2)	(0 | 1 | 0) / (1 | 2 | 1)
71	Shey 115 / Split Rock 115	(2 | 5 | 1) / (2 | 2 | 2)	(2 | 5 | 1) / (2 | 2 | 2)	(2 | 5 | 3) / (2 | 2 | 2)	(2 | 5 | 1) / (2 | 2 | 2)	(2 | 5 | 0) / (2 | 2 | 2)
72	**Damping Performance**	N/A	N/A	N/A	N/A	N/A

Appendix A.5 - Simulation Summary Tables With 100 MW GI-0503

1	**Case No.**	16	17	18	19	20
2	**Case Name**	b01-so09aa-fd4	b01-so09aa-fd9	b01-so09aa-fdk	b01-so09aa-fdl	b01-so09aa-ha3
3	**Disturbance**	fd4	fd9	fdk	fdl	ha3
4	**Prior Outage**	None	None	None	None	None
5	**Date/Time**	OCT 17 2007 17:53	OCT 22 2007 10:25	OCT 17 2007 17:51	OCT 17 2007 17:54	OCT 17 2007 17:43
6	**Comments**					
7						
8	**Steady State Flows**					
9	NDEX / EAST BIAS	2080 / 293	2080 / 293	2080 / 293	2080 / 293	2080 / 293
10	MHEX / L20D	2175 / 235	2175 / 235	2175 / 235	2175 / 235	2175 / 235
11	ECL-ARP / PRI-BYN	528 / 721	528 / 721	528 / 721	528 / 721	528 / 721
12	MWSI / MNEX	1249	1249	1249	1249	1249
13	D602F / F601C	1826 / 1895	1826 / 1895	1826 / 1895	1826 / 1895	1826 / 1895
14	B10T / MH>SPC	164 / 20	164 / 20	164 / 20	164 / 20	164 / 20
15	OH E-W / OH>MH	99 / -195	99 / -195	99 / -195	99 / -195	99 / -195
16	R50M / OH>MP	137 / 150	137 / 150	137 / 150	137 / 150	137 / 150
17	G82R	-23	-23	-23	-23	-23
18	Dorsey bipole / CU bipole	3228 / 1104	3228 / 1104	3228 / 1104	3228 / 1104	3228 / 1104
19	Dorsey Reserve / Wtrtn SVC	198 / 17	198 / 17	198 / 17	198 / 17	198 / 17
20	Forbes SVC / MSC	5 / 600	5 / 600	5 / 600	5 / 600	5 / 600
21	Arrowhd-Wstn/ RCDC	554 / 0	554 / 0	554 / 0	554 / 0	554 / 0
22	**Steady State Vltgs**					
23	Dorsey 500/Dorsey 230	1.039 / 1.045	1.039 / 1.045	1.039 / 1.045	1.039 / 1.045	1.039 / 1.045
24	Roseau 500/Forbes 500	1.069 / 0.991	1.069 / 0.991	1.069 / 0.991	1.069 / 0.991	1.069 / 0.991
25	Chisago 500/EauClaire 345	0.992 / 1.020	0.992 / 1.020	0.992 / 1.020	0.992 / 1.020	0.992 / 1.020
26	Int Falls 115/Badoura 115	1.021 / 1.025	1.021 / 1.025	1.021 / 1.025	1.021 / 1.025	1.021 / 1.025
27	Drayton 230/Groton 345	1.008 / 1.030	1.008 / 1.030	1.008 / 1.030	1.008 / 1.030	1.008 / 1.030
28	**SS OS Relay Margins**					
29	D602F at Forbes/Dorsey	218% / 347%	218% / 347%	218% / 347%	218% / 347%	218% / 347%
30	82R at Rugby/L20D at Drayton	999% / 847%	999% / 847%	999% / 847%	999% / 847%	999% / 847%
31	R50M/F3M	988% / 328%	988% / 328%	988% / 328%	988% / 328%	988% / 328%
32	B10T	335%	335%	335%	335%	335%
33	**Min/MaxTransientVltg**					
34	Arrowhd 230	0.93 | 1.01	0.94 | 1.01	1.00 | 1.05	0.94 | 1.03	1.00 | 1.00
35	Boise 115	0.99 | 1.04	0.99 | 1.03	1.00 | 1.03	1.00 | 1.04	1.02 | 1.02
36	Dorsey 230	1.02 | 1.06	1.02 | 1.06	1.03 | 1.06	1.03 | 1.06	1.04 | 1.05
37	Forbes 230	0.97 | 1.03	0.97 | 1.02	0.99 | 1.02	0.98 | 1.02	1.00 | 1.00
38	Riverton 230	0.94 | 1.06	0.95 | 1.05	0.99 | 1.05	0.98 | 1.05	1.02 | 1.02
39	Coal Creek 230	0.96 | 1.15	0.96 | 1.14	0.97 | 1.11	0.97 | 1.11	1.03 | 1.05
40	Dickinson 345	0.94 | 1.06	0.93 | 1.05	0.95 | 1.04	0.95 | 1.05	1.00 | 1.01
41	Drayton 230	0.96 | 1.12	0.96 | 1.09	0.98 | 1.05	0.97 | 1.09	1.02 | 1.03
42	Groton 345	0.88 | 1.13	0.89 | 1.10	0.96 | 1.10	0.96 | 1.12	1.03 | 1.04
43	Tioga 230	0.98 | 1.05	0.99 | 1.04	1.00 | 1.04	0.99 | 1.04	1.02 | 1.03
44	Wahpeton 115	0.87 | 1.14	0.89 | 1.11	0.96 | 1.11	0.96 | 1.11	1.04 | 1.05
45	Watertown 345	0.92 | 1.10	0.93 | 1.08	0.99 | 1.08	0.99 | 1.10	1.04 | 1.04
46	**Dynamic Voltage Warnings**					
47		63199 [JAMSTN1Y] 0.67	none	none	none	none
48		63200 [JAMSTN2Y] 0.67				
49		63369 [JAMESTN3] 0.67				
50		63270 [LADISH 7] 0.68				
51		63271 [AVIKO 7] 0.68				
52		63272 [JAMESPK7] 0.68				
53		273 [JAMETAP7] 0.68 +m				
54	Worst Case Angle Damping					
55	Dorsey SUVP / UdHold		/ 0.166			
56	Forbes DC Red (DCAR)	332%	383%	473%	484%	504%
57	K22W (max +dP @ t, d-ang)	24.4@(2.74165,-1.4)	20.4@(2.66665,-1.4)	42.8@(2.49999,-16.9)	44.9@(2.49999,-15.9)	11.5@(2.07500,-4.3)
58	K22W (max -dP @ t, d-ang)	25.4@(0.88333,4.6)	20.0@(0.75833,3.5)	2.5@(0.31667,-0.2)	3.0@(0.59166,-0.9)	1.0@(0.25000,0.0)
59	K22W (max d-ang @ t, dP)	9.5@(1.25000,-2.5)	8.1@(1.17500,-4.6)	-18.9@(1.96666,30.7)	-18.4@(1.95000,29.7)	-4.4@(2.43332,9.9)
60	**OS Rel Trip / Marg**					
61	MH - OH					
62	D602F at Forbes/Dorsey	160% / 250%	167% / 261%	185% / 292%	185% / 290%	217% / 346%
63	82R at Rugby/L20D at Drayton	999% / 574%	999% / 617%	999% / 612%	999% / 545%	999% / 809%
64	R50M / F3M	784% / 257%	805% / 265%	829% / 242%	825% / 246%	983% / 312%
65	B10T	124%	150%	145%	120%	185%
66	**FSCAPS (SS/Unav/Final)**					
67	Balta 230	(0 | 1 | 0)	(0 | 3 | 0)	(0 | 0 | 0)	(0 | 0 | 0)	(0 | 0 | 0)
68	Eau Cl 345 / Park Lk 115	(3 | 3 | 3) / (1 | 1 | 1)	(3 | 3 | 3) / (1 | 1 | 1)	(3 | 3 | 3) / (1 | 1 | 1)	(3 | 3 | 3) / (1 | 1 | 1)	(3 | 3 | 3) / (1 | 1 | 1)
69	Prairie 115 / Ramsey 230	(1 | 8 | 2) / (0 | 0 | 0)	(1 | 7 | 2) / (0 | 0 | 0)	(1 | 4 | 2) / (0 | 0 | 0)	(1 | 6 | 1) / (0 | 0 | 0)	(1 | 2 | 2) / (0 | 0 | 0)
70	Roseau 230 / Running 230	(0 | 0 | 0) / (1 | 1 | 1)	(0 | 0 | 0) / (1 | 1 | 1)	(0 | 0 | 0) / (1 | 1 | 1)	(0 | 0 | 0) / (1 | 1 | 1)	(0 | 0 | 0) / (1 | 1 | 1)
71	Shey 115 / Split Rock 115	(2 | 5 | 0) / (2 | 2 | 2)	(2 | 5 | 1) / (2 | 2 | 2)	(2 | 5 | 0) / (2 | 2 | 2)	(2 | 5 | 0) / (2 | 2 | 2)	(2 | 2 | 2) / (2 | 2 | 2)
72	**Damping Performance**	N/A	N/A	N/A	N/A	N/A

Appendix A.5 - Simulation Summary Tables With 100 MW GI-0503

1	**Case No.**	21	22	23	24	25
2	**Case Name**	b01-so09aa-ha3-nt	b01-so09aa-hb3	b01-so09aa-hb3-nt	b01-so09aa-nbz	b01-so09aa-nmz
3	**Disturbance**	-nt	hb3	-nt	nbz	nmz
4	**Prior Outage**	None	None	None	None	None
5	**Date/Time**	OCT 17 2007 18:38	OCT 17 2007 17:44	OCT 17 2007 18:39	OCT 17 2007 17:39	OCT 19 2007 9:42
6	**Comments**					
7						
8	**Steady State Flows**					
9	NDEX / EAST BIAS	2080 / 293	2080 / 293	2080 / 293	2080 / 293	2080 / 293
10	MHEX / L20D	2175 / 235	2175 / 235	2175 / 235	2175 / 235	2175 / 235
11	ECL-ARP / PRI-BYN	528 / 721	528 / 721	528 / 721	528 / 721	528 / 721
12	MWSI / MNEX	1249	1249	1249	1249	1249
13	D602F / F601C	1826 / 1895	1826 / 1895	1826 / 1895	1826 / 1895	1826 / 1895
14	B10T / MH>SPC	164 / 20	164 / 20	164 / 20	164 / 20	164 / 20
15	OH E-W / OH>MH	99 / -195	99 / -195	99 / -195	99 / -195	99 / -195
16	R50M / OH>MP	137 / 150	137 / 150	137 / 150	137 / 150	137 / 150
17	G82R	-23	-23	-23	-23	-23
18	Dorsey bipole / CU bipole	3228 / 1104	3228 / 1104	3228 / 1104	3228 / 1104	3228 / 1104
19	Dorsey Reserve / Wtrtn SVC	198 / 17	198 / 17	198 / 17	198 / 17	198 / 17
20	Forbes SVC / MSC	5 / 600	5 / 600	5 / 600	5 / 600	5 / 600
21	Arrowhd-Wstn/ RCDC	554 / 0	554 / 0	554 / 0	554 / 0	554 / 0
22	**Steady State Vltgs**					
23	Dorsey 500/Dorsey 230	1.039 / 1.045	1.039 / 1.045	1.039 / 1.045	1.039 / 1.045	1.039 / 1.045
24	Roseau 500/Forbes 500	1.069 / 0.991	1.069 / 0.991	1.069 / 0.991	1.069 / 0.991	1.069 / 0.991
25	Chisago 500/EauClaire 345	0.992 / 1.020	0.992 / 1.020	0.992 / 1.020	0.992 / 1.020	0.992 / 1.020
26	Int Falls 115/Badoura 115	1.021 / 1.025	1.021 / 1.025	1.021 / 1.025	1.021 / 1.025	1.021 / 1.025
27	Drayton 230/Groton 345	1.008 / 1.030	1.008 / 1.030	1.008 / 1.030	1.008 / 1.030	1.008 / 1.030
28	**SS OS Relay Margins**					
29	D602F at Forbes/Dorsey	218% / 347%	218% / 347%	218% / 347%	218% / 347%	218% / 347%
30	82R at Rugby/L20D at Drayton	999% / 847%	999% / 847%	999% / 847%	999% / 847%	999% / 847%
31	R50M/F3M	988% / 328%	988% / 328%	988% / 328%	988% / 328%	988% / 328%
32	B10T	335%	335%	335%	335%	335%
33	**Min/MaxTransientVltg**					
34	Arrowhd 230	0.99 | 1.00	1.00 | 1.00	0.99 | 1.00	(0.65)0.73 | 1.06	(0.57)0.80 | 1.04
35	Boise 115	1.02 | 1.02	1.02 | 1.02	1.02 | 1.02	0.96 | 1.05	0.96 | 1.05
36	Dorsey 230	1.04 | 1.05	1.04 | 1.05	1.04 | 1.05	1.05 | 1.21	1.05 | 1.21
37	Forbes 230	1.00 | 1.00	1.00 | 1.00	1.00 | 1.00	0.85 | 1.07	0.95 | 1.02
38	Riverton 230	1.01 | 1.02	1.02 | 1.02	1.01 | 1.02	0.77 | 1.05	0.81 | 1.04
39	Coal Creek 230	1.03 | 1.05	1.03 | 1.05	1.03 | 1.04	0.91 | 1.13	0.92 | 1.13
40	Dickinson 345	1.00 | 1.01	1.00 | 1.01	1.00 | 1.01	0.88 | 1.09	0.89 | 1.08
41	Drayton 230	1.02 | 1.02	1.02 | 1.03	1.02 | 1.02	0.96 | 1.09	0.97 | 1.09
42	Groton 345	1.03 | 1.04	1.03 | 1.04	1.03 | 1.04	0.80 | 1.10	0.82 | 1.08
43	Tioga 230	1.02 | 1.03	1.02 | 1.03	1.02 | 1.02	0.97 | 1.06	0.98 | 1.06
44	Wahpeton 115	1.04 | 1.05	1.04 | 1.05	1.04 | 1.04	0.82 | 1.09	0.84 | 1.09
45	Watertown 345	1.03 | 1.04	1.04 | 1.04	1.03 | 1.04	0.83 | 1.08	0.85 | 1.06
46	**Dynamic Voltage Warnings**					
47		none	none	none	61615 [ARROWHD4] 0.78	61615 [ARROWHD4] 0.80
48					61614 [98L TAP4] 0.78	61614 [98L TAP4] 0.80
49					61616 [HILLTOP4] 0.78	61616 [HILLTOP4] 0.80
50					61673 [ARROWHD7] 0.79	61674 [HANESRD7] 0.81
51					61674 [HANESRD7] 0.79	61686 [15TH AV7] 0.81
52					61687 [MIDWAY 7] 0.80	61687 [MIDWAY 7] 0.81
53					54 [AWHD1JCT] 0.80 +m	73 [ARROWHD7] 0.81 +m
54	Worst Case Angle Damping					
55	Dorsey SUVP / UdHold				/ 0.133	/ 0.133
56	Forbes DC Red (DCAR)	501%	504%	499%	507%	507%
57	K22W (max +dP @ t, d-ang)	2.5@(2.20833,-0.7)	11.4@(2.07500,-4.2)	3.5@(2.34166,-1.1)	161.7@(2.70832,-62.4)	147.8@(2.63332,-59.5)
58	K22W (max -dP @ t, d-ang)	1.3@(0.28333,0.0)	1.0@(0.25000,0.0)	1.0@(0.25833,0.0)	91.8@(0.24167,7.4)	92.9@(0.23333,7.1)
59	K22W (max d-ang @ t, dP)	-0.9@(1.55000,0.9)	-4.4@(2.43332,9.9)	-1.2@(1.64166,1.9)	-63.4@(2.50832,147.3)	-60.7@(2.44166,138.3)
60	**OS Rel Trip / Marg**					
61	MH - OH					
62	D602F at Forbes/Dorsey	217% / 346%	217% / 346%	217% / 347%	0.18333 sec / 0.18333 sec	0.18333 sec / 0.18333 sec
63	82R at Rugby/L20D at Drayton	999% / 836%	999% / 809%	999% / 847%	999% / 490%	999% / 519%
64	R50M / F3M	979% / 322%	983% / 312%	982% / 323%	549% / 135%	536% / 161%
65	B10T	316%	268%	301%	85%	101%
66	**FSCAPS (SS/Unav/Final)**					
67	Balta 230	(0 | 0 | 0)	(0 | 0 | 0)	(0 | 0 | 0)	(0 | 2 | 0)	(0 | 2 | 0)
68	Eau Cl 345 / Park Lk 115	(3 | 3 | 3) / (1 | 1 | 1)	(3 | 3 | 3) / (1 | 1 | 1)	(3 | 3 | 3) / (1 | 1 | 1)	(3 | 3 | 1) / (1 | 1 | 1)	(3 | 3 | 1) / (1 | 1 | 1)
69	Prairie 115 / Ramsey 230	(1 | 2 | 2) / (0 | 0 | 0)	(1 | 2 | 2) / (0 | 0 | 0)	(1 | 2 | 2) / (0 | 0 | 0)	(1 | 5 | 1) / (0 | 0 | 0)	(1 | 5 | 1) / (0 | 0 | 0)
70	Roseau 230 / Running 230	(0 | 0 | 0) / (1 | 1 | 1)	(0 | 0 | 0) / (1 | 1 | 1)	(0 | 0 | 0) / (1 | 1 | 1)	(0 | 0 | 0) / (1 | 2 | 0)	(0 | 0 | 0) / (1 | 4 | 1)
71	Shey 115 / Split Rock 115	(2 | 2 | 2) / (2 | 2 | 2)	(2 | 2 | 2) / (2 | 2 | 2)	(2 | 2 | 2) / (2 | 2 | 2)	(2 | 5 | 2) / (2 | 2 | 2)	(2 | 5 | 2) / (2 | 2 | 2)
72	**Damping Performance**	N/A	N/A	N/A	N/A	N/A

Appendix A.5 - Simulation Summary Tables With 100 MW GI-0503

1	**Case No.**	26	27	28	29	30
2	**Case Name**	b01-so09aa-pcs	b01-so09aa-pct	b01-so09aa-pys	b01-so09aa-pyt	b01-so09aa-ya3
3	**Disturbance**	pcs	pct	pys	pyt	ya3
4	**Prior Outage**	None	None	None	None	None
5	**Date/Time**	OCT 17 2007 18:18	OCT 17 2007 18:23	OCT 17 2007 18:28	OCT 17 2007 18:33	OCT 17 2007 17:41
6	**Comments**					
7						
8	**Steady State Flows**					
9	NDEX / EAST BIAS	2080 / 293	2080 / 293	2080 / 293	2080 / 293	2080 / 293
10	MHEX / L20D	2175 / 235	2175 / 235	2175 / 235	2175 / 235	2175 / 235
11	ECL-ARP / PRI-BYN	528 / 721	528 / 721	528 / 721	528 / 721	528 / 721
12	MWSI / MNEX	1249	1249	1249	1249	1249
13	D602F / F601C	1826 / 1895	1826 / 1895	1826 / 1895	1826 / 1895	1826 / 1895
14	B10T / MH>SPC	164 / 20	164 / 20	164 / 20	164 / 20	164 / 20
15	OH E-W / OH>MH	99 / -195	99 / -195	99 / -195	99 / -195	99 / -195
16	R50M / OH>MP	137 / 150	137 / 150	137 / 150	137 / 150	137 / 150
17	G82R	-23	-23	-23	-23	-23
18	Dorsey bipole / CU bipole	3228 / 1104	3228 / 1104	3228 / 1104	3228 / 1104	3228 / 1104
19	Dorsey Reserve / Wtrtn SVC	198 / 17	198 / 17	198 / 17	198 / 17	198 / 17
20	Forbes SVC / MSC	5 / 600	5 / 600	5 / 600	5 / 600	5 / 600
21	Arrowhd-Wstn/ RCDC	554 / 0	554 / 0	554 / 0	554 / 0	554 / 0
22	**Steady State Vltgs**					
23	Dorsey 500/Dorsey 230	1.039 / 1.045	1.039 / 1.045	1.039 / 1.045	1.039 / 1.045	1.039 / 1.045
24	Roseau 500/Forbes 500	1.069 / 0.991	1.069 / 0.991	1.069 / 0.991	1.069 / 0.991	1.069 / 0.991
25	Chisago 500/EauClaire 345	0.992 / 1.020	0.992 / 1.020	0.992 / 1.020	0.992 / 1.020	0.992 / 1.020
26	Int Falls 115/Badoura 115	1.021 / 1.025	1.021 / 1.025	1.021 / 1.025	1.021 / 1.025	1.021 / 1.025
27	Drayton 230/Groton 345	1.008 / 1.030	1.008 / 1.030	1.008 / 1.030	1.008 / 1.030	1.008 / 1.030
28	**SS OS Relay Margins**					
29	D602F at Forbes/Dorsey	218% / 347%	218% / 347%	218% / 347%	218% / 347%	218% / 347%
30	82R at Rugby/L20D at Drayton	999% / 847%	999% / 847%	999% / 847%	999% / 847%	999% / 847%
31	R50M/F3M	988% / 328%	988% / 328%	988% / 328%	988% / 328%	988% / 328%
32	B10T	335%	335%	335%	335%	335%
33	**Min/MaxTransientVltg**					
34	Arrowhd 230	0.86 | 0.98	0.94 | 0.97	0.97 | 1.00	0.98 | 1.00	0.98 | 0.99
35	Boise 115	0.99 | 1.05	1.02 | 1.03	1.00 | 1.05	1.02 | 1.03	1.02 | 1.04
36	Dorsey 230	1.02 | 1.09	1.04 | 1.05	1.02 | 1.07	1.04 | 1.05	1.04 | 1.06
37	Forbes 230	0.98 | 1.02	0.99 | 1.00	0.99 | 1.04	1.00 | 1.01	0.99 | 1.00
38	Riverton 230	0.99 | 1.02	1.01 | 1.02	1.00 | 1.03	1.01 | 1.03	1.00 | 1.01
39	Coal Creek 230	0.96 | 1.07	1.02 | 1.05	0.98 | 1.07	1.02 | 1.05	1.02 | 1.05
40	Dickinson 345	0.95 | 1.04	0.98 | 1.01	0.97 | 1.04	0.99 | 1.01	0.97 | 1.00
41	Drayton 230	0.98 | 1.03	1.00 | 1.02	0.98 | 1.02	1.00 | 1.02	1.00 | 1.02
42	Groton 345	0.97 | 1.04	1.02 | 1.04	0.99 | 1.04	1.02 | 1.03	1.01 | 1.03
43	Tioga 230	0.98 | 1.03	1.02 | 1.03	0.99 | 1.03	1.02 | 1.03	1.01 | 1.03
44	Wahpeton 115	0.99 | 1.06	1.04 | 1.05	1.01 | 1.06	1.04 | 1.05	1.03 | 1.05
45	Watertown 345	0.99 | 1.04	1.03 | 1.04	1.00 | 1.04	1.03 | 1.04	1.02 | 1.03
46	**Dynamic Voltage Warnings**					
47		none	none	none	none	none
48						
49						
50						
51						
52						
53						
54	Worst Case Angle Damping	SHERC3 / 67.07%	SHERC3 / 56.40%	SHERC3 / 72.69%	SHERC3 / 60.01%	
55	Dorsey SUVP / UdHold					
56	Forbes DC Red (DCAR)	163%	308%	149%	347%	400%
57	K22W (max +dP @ t, d-ang)	7.6@(3.54997,1.8)	0.0@(0.09167,0.0)	7.7@(3.49997,0.0)	0.0@(0.09167,0.0)	3.2@(0.11667,0.6)
58	K22W (max -dP @ t, d-ang)	52.4@(1.73333,19.2)	26.7@(2.29166,12.3)	36.0@(1.71666,11.6)	19.6@(1.85833,8.7)	26.3@(1.70000,12.2)
59	K22W (max d-ang @ t, dP)	28.8@(1.15000,-41.8)	12.4@(2.18333,-26.7)	21.2@(1.12500,-25.2)	9.1@(2.17499,-18.7)	12.4@(1.96666,-22.8)
60	**OS Rel Trip / Marg**					
61	MH - OH					
62	D602F at Forbes/Dorsey	164% / 254%	218% / 347%	166% / 257%	218% / 347%	212% / 338%
63	82R at Rugby/L20D at Drayton	999% / 558%	999% / 779%	999% / 613%	999% / 783%	999% / 738%
64	R50M / F3M	668% / 328%	916% / 328%	728% / 307%	957% / 328%	987% / 328%
65	B10T	146%	293%	174%	291%	266%
66	**FSCAPS (SS/Unav/Final)**					
67	Balta 230	(0 | 0 | 0)	(0 | 0 | 0)	(0 | 0 | 0)	(0 | 0 | 0)	(0 | 0 | 0)
68	Eau Cl 345 / Park Lk 115	(3 | 4 | 2) / (1 | 3 | 3)	(3 | 3 | 2) / (1 | 1 | 1)	(3 | 4 | 4) / (1 | 3 | 3)	(3 | 3 | 3) / (1 | 1 | 1)	(3 | 4 | 4) / (1 | 1 | 1)
69	Prairie 115 / Ramsey 230	(1 | 2 | 2) / (0 | 0 | 0)	(1 | 1 | 1) / (0 | 0 | 0)	(1 | 1 | 1) / (0 | 0 | 0)	(1 | 1 | 1) / (0 | 0 | 0)	(1 | 1 | 1) / (0 | 0 | 0)
70	Roseau 230 / Running 230	(0 | 0 | 0) / (1 | 1 | 1)	(0 | 0 | 0) / (1 | 1 | 1)	(0 | 0 | 0) / (1 | 1 | 1)	(0 | 0 | 0) / (1 | 1 | 1)	(0 | 0 | 0) / (1 | 1 | 1)
71	Shey 115 / Split Rock 115	(2 | 3 | 3) / (2 | 2 | 2)	(2 | 2 | 2) / (2 | 2 | 2)	(2 | 2 | 2) / (2 | 2 | 2)	(2 | 2 | 2) / (2 | 2 | 2)	(2 | 2 | 2) / (2 | 2 | 2)
72	**Damping Performance**	N/A	N/A	N/A	N/A	N/A

Appendix A.5 - Simulation Summary Tables With 100 MW GI-0503

1	**Case No.**	31
2	**Case Name**	b01-so09aa-yas
3	**Disturbance**	yas
4	**Prior Outage**	None
5	**Date/Time**	OCT 17 2007 17:56
6	**Comments**	
7		
8	**Steady State Flows**	
9	NDEX / EAST BIAS	2080 / 293
10	MHEX / L20D	2175 / 235
11	ECL-ARP / PRI-BYN	528 / 721
12	MWSI / MNEX	1249
13	D602F / F601C	1826 / 1895
14	B10T / MH>SPC	164 / 20
15	OH E-W / OH>MH	99 / -195
16	R50M / OH>MP	137 / 150
17	G82R	-23
18	Dorsey bipole / CU bipole	3228 / 1104
19	Dorsey Reserve / Wtrtn SVC	198 / 17
20	Forbes SVC / MSC	5 / 600
21	Arrowhd-Wstn/ RCDC	554 / 0
22	**Steady State Vltgs**	
23	Dorsey 500/Dorsey 230	1.039 / 1.045
24	Roseau 500/Forbes 500	1.069 / 0.991
25	Chisago 500/EauClaire 345	0.992 / 1.020
26	Int Falls 115/Badoura 115	1.021 / 1.025
27	Drayton 230/Groton 345	1.008 / 1.030
28	**SS OS Relay Margins**	
29	D602F at Forbes/Dorsey	218% / 347%
30	82R at Rugby/L20D at Drayton	999% / 847%
31	R50M/F3M	988% / 328%
32	B10T	335%
33	**Min/MaxTransientVltg**	
34	Arrowhd 230	0.90 | 0.97
35	Boise 115	1.01 | 1.04
36	Dorsey 230	1.04 | 1.07
37	Forbes 230	0.98 | 1.01
38	Riverton 230	0.97 | 1.02
39	Coal Creek 230	0.98 | 1.06
40	Dickinson 345	0.93 | 1.00
41	Drayton 230	0.99 | 1.02
42	Groton 345	1.01 | 1.03
43	Tioga 230	1.01 | 1.03
44	Wahpeton 115	1.02 | 1.05
45	Watertown 345	1.02 | 1.03
46	**Dynamic Voltage Warnings**	
47		39449] 1.21
48		
49		
50		
51		
52		
53		
54	Worst Case Angle Damping	
55	Dorsey SUVP / UdHold	
56	Forbes DC Red (DCAR)	433%
57	K22W (max +dP @ t, d-ang)	2.2@(0.11667,0.3)
58	K22W (max -dP @ t, d-ang)	23.7@(1.61666,10.4)
59	K22W (max d-ang @ t, dP)	11.7@(1.10000,-15.6)
60	**OS Rel Trip / Marg**	
61	MH - OH	
62	D602F at Forbes/Dorsey	194% / 309%
63	82R at Rugby/L20D at Drayton	999% / 731%
64	R50M / F3M	908% / 328%
65	B10T	262%
66	**FSCAPS (SS/Unav/Final)**	
67	Balta 230	(0 | 0 | 0)
68	Eau Cl 345 / Park Lk 115	(3 | 3 | 3) / (1 | 1 | 1)
69	Prairie 115 / Ramsey 230	(1 | 1 | 1) / (0 | 0 | 0)
70	Roseau 230 / Running 230	(0 | 0 | 0) / (1 | 1 | 1)
71	Shey 115 / Split Rock 115	(2 | 2 | 2) / (2 | 2 | 2)
72	**Damping Performance**	N/A

Appendix A.6 - Simulation Summary Tables With 125 MW GI-0503

1	**Case No.**	1	2	3	4	5
2	**Case Name**	b02-so09aa-zss	b02-so09aa-ac3	b02-so09aa-ad3	b02-so09aa-ag1	b02-so09aa-ag3
3	**Disturbance**	zss	ac3	ad3	ag1	ag3
4	**Prior Outage**	None	None	None	None	None
5	**Date/Time**	NOV 09 2007 15:04	NOV 10 2007 12:26	NOV 10 2007 12:27	NOV 10 2007 12:52	NOV 10 2007 12:29
6	**Comments**					
7						
8	**Steady State Flows**					
9	NDEX / EAST BIAS	2080 / 293	2080 / 293	2080 / 293	2080 / 293	2080 / 293
10	MHEX / L20D	2175 / 236	2175 / 236	2175 / 236	2175 / 236	2175 / 236
11	ECL-ARP / PRI-BYN	528 / 721	528 / 721	528 / 721	528 / 721	528 / 721
12	MWSI / MNEX	1249	1249	1249	1249	1249
13	D602F / F601C	1826 / 1895	1826 / 1895	1826 / 1895	1826 / 1895	1826 / 1895
14	B10T / MH>SPC	164 / 20	164 / 20	164 / 20	164 / 20	164 / 20
15	OH E-W / OH>MH	99 / -195	99 / -195	99 / -195	99 / -195	99 / -195
16	R50M / OH>MP	137 / 150	137 / 150	137 / 150	137 / 150	137 / 150
17	G82R	-24	-24	-24	-24	-24
18	Dorsey bipole / CU bipole	3228 / 1104	3228 / 1104	3228 / 1104	3228 / 1104	3228 / 1104
19	Dorsey Reserve / Wtrtn SVC	198 / 16	198 / 16	198 / 16	198 / 16	198 / 16
20	Forbes SVC / MSC	5 / 600	5 / 600	5 / 600	5 / 600	5 / 600
21	Arrowhd-Wstn/ RCDC	554 / 0	554 / 0	554 / 0	554 / 0	554 / 0
22	**Steady State Vltgs**					
23	Dorsey 500/Dorsey 230	1.039 / 1.045	1.039 / 1.045	1.039 / 1.045	1.039 / 1.045	1.039 / 1.045
24	Roseau 500/Forbes 500	1.069 / 0.991	1.069 / 0.991	1.069 / 0.991	1.069 / 0.991	1.069 / 0.991
25	Chisago 500/EauClaire 345	0.992 / 1.020	0.992 / 1.020	0.992 / 1.020	0.992 / 1.020	0.992 / 1.020
26	Int Falls 115/Badoura 115	1.021 / 1.025	1.021 / 1.025	1.021 / 1.025	1.021 / 1.025	1.021 / 1.025
27	Drayton 230/Groton 345	1.008 / 1.030	1.008 / 1.030	1.008 / 1.030	1.008 / 1.030	1.008 / 1.030
28	**SS OS Relay Margins**					
29	D602F at Forbes/Dorsey	218% / 348%	218% / 348%	218% / 348%	218% / 348%	218% / 348%
30	82R at Rugby/L20D at Drayton	999% / 844%	999% / 844%	999% / 844%	999% / 844%	999% / 844%
31	R50M/F3M	988% / 328%	988% / 328%	988% / 328%	988% / 328%	988% / 328%
32	B10T	335%	335%	335%	335%	335%
33	**Min/MaxTransientVltg**					
34	Arrowhd 230	1.00 | 1.00	0.96 | 1.01	0.97 | 1.01	0.96 | 1.00	0.95 | 1.01
35	Boise 115	1.02 | 1.02	0.99 | 1.03	1.00 | 1.03	0.99 | 1.03	0.99 | 1.04
36	Dorsey 230	1.04 | 1.04	1.02 | 1.06	1.03 | 1.06	1.02 | 1.06	1.02 | 1.06
37	Forbes 230	1.00 | 1.00	0.98 | 1.01	0.98 | 1.02	0.98 | 1.01	0.98 | 1.01
38	Riverton 230	1.01 | 1.01	0.97 | 1.04	0.98 | 1.04	0.97 | 1.04	0.97 | 1.04
39	Coal Creek 230	1.03 | 1.03	0.95 | 1.12	0.96 | 1.12	0.95 | 1.12	0.95 | 1.12
40	Dickinson 345	1.00 | 1.00	0.94 | 1.04	0.94 | 1.04	0.93 | 1.04	0.93 | 1.04
41	Drayton 230	1.01 | 1.01	0.96 | 1.10	0.97 | 1.08	0.96 | 1.10	0.95 | 1.10
42	Groton 345	1.03 | 1.03	0.85 | 1.06	0.89 | 1.08	0.85 | 1.07	0.85 | 1.07
43	Tioga 230	1.02 | 1.02	0.97 | 1.05	0.98 | 1.05	0.98 | 1.05	0.98 | 1.05
44	Wahpeton 115	1.04 | 1.04	0.93 | 1.09	0.96 | 1.10	0.94 | 1.10	0.94 | 1.10
45	Watertown 345	1.03 | 1.03	0.94 | 1.05	0.95 | 1.06	0.93 | 1.06	0.93 | 1.05
46	**Dynamic Voltage Warnings**					
47		none	none	none	none	none
48						
49						
50						
51						
52						
53						
54	Worst Case Angle Damping					
55	Dorsey SUVP / UdHold					
56	Forbes DC Red (DCAR)	507%	414%	391%	411%	406%
57	K22W (max +dP @ t, d-ang)	0.0@(2.61665,0.0)	13.0@(2.63332,0.7)	15.0@(2.49999,-1.0)	11.0@(2.62499,2.5)	13.1@(2.59165,1.9)
58	K22W (max -dP @ t, d-ang)	0.0@(4.96662,0.0)	24.6@(0.82500,6.7)	15.9@(0.68333,3.3)	24.7@(0.83333,6.3)	25.4@(0.79166,7.0)
59	K22W (max d-ang @ t, dP)	0.0@(3.16665,0.0)	10.0@(1.15833,-9.3)	6.1@(1.05000,-3.2)	9.7@(1.15833,-8.0)	10.5@(1.11666,-9.7)
60	**OS Rel Trip / Marg**					
61	MH - OH					
62	D602F at Forbes/Dorsey	218% / 347%	157% / 245%	176% / 277%	160% / 249%	157% / 243%
63	82R at Rugby/L20D at Drayton	999% / 844%	999% / 654%	999% / 681%	999% / 633%	999% / 641%
64	R50M / F3M	988% / 328%	754% / 266%	827% / 275%	761% / 266%	749% / 264%
65	B10T	335%	179%	187%	172%	168%
66	**FSCAPS (SS/Unav/Final)**					
67	Balta 230	(0 | 0 | 0)	(0 | 3 | 0)	(0 | 1 | 0)	(0 | 3 | 0)	(0 | 3 | 0)
68	Eau Cl 345 / Park Lk 115	(3 | 3 | 3) / (1 | 1 | 1)	(3 | 3 | 3) / (1 | 1 | 1)	(3 | 3 | 3) / (1 | 1 | 1)	(3 | 3 | 3) / (1 | 1 | 1)	(3 | 3 | 3) / (1 | 1 | 1)
69	Prairie 115 / Ramsey 230	(1 | 1 | 1) / (0 | 0 | 0)	(1 | 7 | 2) / (0 | 0 | 0)	(1 | 4 | 1) / (0 | 0 | 0)	(1 | 7 | 2) / (0 | 0 | 0)	(1 | 6 | 2) / (0 | 0 | 0)
70	Roseau 230 / Running 230	(0 | 0 | 0) / (1 | 1 | 1)	(0 | 0 | 0) / (1 | 1 | 1)	(0 | 0 | 0) / (1 | 1 | 1)	(0 | 0 | 0) / (1 | 1 | 1)	(0 | 0 | 0) / (1 | 1 | 1)
71	Shey 115 / Split Rock 115	(2 | 2 | 2) / (2 | 2 | 2)	(2 | 5 | 3) / (2 | 2 | 2)	(2 | 5 | 1) / (2 | 2 | 2)	(2 | 5 | 2) / (2 | 2 | 2)	(2 | 5 | 3) / (2 | 2 | 2)
72	**Damping Performance**	N/A	N/A	N/A	N/A	N/A

Appendix A.6 - Simulation Summary Tables With 125 MW GI-0503

1	**Case No.**	6	7	8	9	10
2	**Case Name**	b02-so09aa-bl3	b02-so09aa-eb3	b02-so09aa-ec3	b02-so09aa-ef3	b02-so09aa-ei2
3	**Disturbance**	bl3	eb3	ec3	ef3	ei2
4	**Prior Outage**	None	None	None	None	None
5	**Date/Time**	NOV 10 2007 12:31	NOV 10 2007 12:33	NOV 10 2007 12:34	NOV 10 2007 12:36	NOV 10 2007 12:40
6	**Comments**					
7						
8	**Steady State Flows**					
9	NDEX / EAST BIAS	2080 / 293	2080 / 293	2080 / 293	2080 / 293	2080 / 293
10	MHEX / L20D	2175 / 236	2175 / 236	2175 / 236	2175 / 236	2175 / 236
11	ECL-ARP / PRI-BYN	528 / 721	528 / 721	528 / 721	528 / 721	528 / 721
12	MWSI / MNEX	1249	1249	1249	1249	1249
13	D602F / F601C	1826 / 1895	1826 / 1895	1826 / 1895	1826 / 1895	1826 / 1895
14	B10T / MH>SPC	164 / 20	164 / 20	164 / 20	164 / 20	164 / 20
15	OH E-W / OH>MH	99 / -195	99 / -195	99 / -195	99 / -195	99 / -195
16	R50M / OH>MP	137 / 150	137 / 150	137 / 150	137 / 150	137 / 150
17	G82R	-24	-24	-24	-24	-24
18	Dorsey bipole / CU bipole	3228 / 1104	3228 / 1104	3228 / 1104	3228 / 1104	3228 / 1104
19	Dorsey Reserve / Wtrtn SVC	198 / 16	198 / 16	198 / 16	198 / 16	198 / 16
20	Forbes SVC / MSC	5 / 600	5 / 600	5 / 600	5 / 600	5 / 600
21	Arrowhd-Wstn/ RCDC	554 / 0	554 / 0	554 / 0	554 / 0	554 / 0
22	**Steady State Vltgs**					
23	Dorsey 500/Dorsey 230	1.039 / 1.045	1.039 / 1.045	1.039 / 1.045	1.039 / 1.045	1.039 / 1.045
24	Roseau 500/Forbes 500	1.069 / 0.991	1.069 / 0.991	1.069 / 0.991	1.069 / 0.991	1.069 / 0.991
25	Chisago 500/EauClaire 345	0.992 / 1.020	0.992 / 1.020	0.992 / 1.020	0.992 / 1.020	0.992 / 1.020
26	Int Falls 115/Badoura 115	1.021 / 1.025	1.021 / 1.025	1.021 / 1.025	1.021 / 1.025	1.021 / 1.025
27	Drayton 230/Groton 345	1.008 / 1.030	1.008 / 1.030	1.008 / 1.030	1.008 / 1.030	1.008 / 1.030
28	**SS OS Relay Margins**					
29	D602F at Forbes/Dorsey	218% / 348%	218% / 348%	218% / 348%	218% / 348%	218% / 348%
30	82R at Rugby/L20D at Drayton	999% / 844%	999% / 844%	999% / 844%	999% / 844%	999% / 844%
31	R50M/F3M	988% / 328%	988% / 328%	988% / 328%	988% / 328%	988% / 328%
32	B10T	335%	335%	335%	335%	335%
33	**Min/MaxTransientVltg**					
34	Arrowhd 230	0.94 | 1.02	0.97 | 1.01	0.94 | 1.01	0.94 | 1.02	0.91 | 1.04
35	Boise 115	0.99 | 1.04	1.00 | 1.03	0.99 | 1.04	0.98 | 1.06	0.98 | 1.05
36	Dorsey 230	1.02 | 1.06	1.03 | 1.05	1.02 | 1.06	1.01 | 1.07	1.02 | 1.07
37	Forbes 230	0.96 | 1.03	0.99 | 1.01	0.97 | 1.02	0.96 | 1.02	0.92 | 1.02
38	Riverton 230	0.94 | 1.06	0.99 | 1.04	0.94 | 1.04	0.93 | 1.06	0.88 | 1.05
39	Coal Creek 230	1.00 | 1.11	0.96 | 1.11	0.90 | 1.14	1.00 | 1.10	0.99 | 1.13
40	Dickinson 345	0.96 | 1.03	0.95 | 1.03	0.93 | 1.05	0.95 | 1.03	0.97 | 1.06
41	Drayton 230	0.94 | 1.12	0.96 | 1.07	0.94 | 1.13	0.93 | 1.13	0.91 | 1.11
42	Groton 345	0.84 | 1.13	0.94 | 1.04	0.87 | 1.10	0.78 | 1.14	0.82 | 1.12
43	Tioga 230	0.98 | 1.04	1.00 | 1.04	0.98 | 1.05	0.96 | 1.05	0.98 | 1.05
44	Wahpeton 115	0.87 | 1.13	0.97 | 1.07	0.88 | 1.11	0.84 | 1.14	0.84 | 1.12
45	Watertown 345	0.89 | 1.11	0.98 | 1.04	0.91 | 1.08	0.85 | 1.11	0.86 | 1.11
46	**Dynamic Voltage Warnings**					
47			none			
48						
49						
50						
51						
52						
53						
54	Worst Case Angle Damping					
55	Dorsey SUVP / UdHold	/ 0.158		/ 0.175	/ 0.158	
56	Forbes DC Red (DCAR)	334%	409%	385%	287%	507%
57	K22W (max +dP @ t, d-ang)	30.9@(2.86665,-3.4)	10.3@(2.59999,-1.9)	20.7@(2.64999,-1.5)	43.5@(3.04998,-4.1)	82.7@(2.97498,-33.5)
58	K22W (max -dP @ t, d-ang)	22.2@(0.81666,3.0)	11.4@(0.80000,2.2)	27.7@(0.75000,4.6)	30.7@(0.96666,5.4)	15.8@(0.66666,2.8)
59	K22W (max d-ang @ t, dP)	-8.9@(3.48331,4.0)	4.0@(1.15833,-5.5)	9.8@(1.18333,-6.7)	12.9@(1.36666,-4.4)	-38.5@(2.41666,59.8)
60	**OS Rel Trip / Marg**					
61	MH - OH					
62	D602F at Forbes/Dorsey	158% / 247%	179% / 282%	158% / 246%	145% / 224%	113% / 173%
63	82R at Rugby/L20D at Drayton	999% / 560%	999% / 614%	999% / 610%	999% / 480%	999% / 487%
64	R50M / F3M	782% / 254%	834% / 279%	768% / 261%	736% / 240%	679% / 192%
65	B10T	123%	288%	134%	101%	75%
66	**FSCAPS (SS/Unav/Final)**					
67	Balta 230	(0 | 3 | 0)	(0 | 2 | 0)	(0 | 3 | 0)	(0 | 3 | 0)	(0 | 2 | 0)
68	Eau Cl 345 / Park Lk 115	(3 | 3 | 3) / (1 | 1 | 1)	(3 | 3 | 3) / (1 | 1 | 1)	(3 | 3 | 3) / (1 | 1 | 1)	(3 | 3 | 3) / (1 | 1 | 1)	(3 | 3 | 2) / (1 | 1 | 1)
69	Prairie 115 / Ramsey 230	(1 |12 | 2) / (0 | 0 | 0)	(1 | 6 | 4) / (0 | 0 | 0)	(1 | 9 | 2) / (0 | 0 | 0)	(1 |12 | 2) / (0 | 0 | 0)	(1 |11 | 2) / (0 | 0 | 0)
70	Roseau 230 / Running 230	(0 | 0 | 0) / (1 | 1 | 1)	(0 | 0 | 0) / (1 | 1 | 1)	(0 | 0 | 0) / (1 | 1 | 1)	(0 | 1 | 0) / (1 | 2 | 1)	(0 | 1 | 0) / (1 | 2 | 1)
71	Shey 115 / Split Rock 115	(2 | 5 | 0) / (2 | 2 | 2)	(2 | 3 | 3) / (2 | 2 | 2)	(2 | 5 | 1) / (2 | 2 | 2)	(2 | 5 | 0) / (2 | 2 | 2)	(2 | 5 | 0) / (2 | 2 | 2)
72	**Damping Performance**	N/A	N/A	N/A	N/A	N/A

Appendix A.6 - Simulation Summary Tables With 125 MW GI-0503

1	**Case No.**	11	12	13	14	15
2	**Case Name**	b02-so09aa-el3	b02-so09aa-eq1	b02-so09aa-ev0	b02-so09aa-fd1	b02-so09aa-fd3
3	**Disturbance**	el3	eq1	ev0	fd1	fd3
4	**Prior Outage**	None	None	None	None	None
5	**Date/Time**	NOV 10 2007 12:38	NOV 10 2007 12:54	NOV 10 2007 12:41	NOV 10 2007 12:56	NOV 10 2007 12:43
6	**Comments**					
7						
8	**Steady State Flows**					
9	NDEX / EAST BIAS	2080 / 293	2080 / 293	2080 / 293	2080 / 293	2080 / 293
10	MHEX / L20D	2175 / 236	2175 / 236	2175 / 236	2175 / 236	2175 / 236
11	ECL-ARP / PRI-BYN	528 / 721	528 / 721	528 / 721	528 / 721	528 / 721
12	MWSI / MNEX	1249	1249	1249	1249	1249
13	D602F / F601C	1826 / 1895	1826 / 1895	1826 / 1895	1826 / 1895	1826 / 1895
14	B10T / MH>SPC	164 / 20	164 / 20	164 / 20	164 / 20	164 / 20
15	OH E-W / OH>MH	99 / -195	99 / -195	99 / -195	99 / -195	99 / -195
16	R50M / OH>MP	137 / 150	137 / 150	137 / 150	137 / 150	137 / 150
17	G82R	-24	-24	-24	-24	-24
18	Dorsey bipole / CU bipole	3228 / 1104	3228 / 1104	3228 / 1104	3228 / 1104	3228 / 1104
19	Dorsey Reserve / Wtrtn SVC	198 / 16	198 / 16	198 / 16	198 / 16	198 / 16
20	Forbes SVC / MSC	5 / 600	5 / 600	5 / 600	5 / 600	5 / 600
21	Arrowhd-Wstn/ RCDC	554 / 0	554 / 0	554 / 0	554 / 0	554 / 0
22	**Steady State Vltgs**					
23	Dorsey 500/Dorsey 230	1.039 / 1.045	1.039 / 1.045	1.039 / 1.045	1.039 / 1.045	1.039 / 1.045
24	Roseau 500/Forbes 500	1.069 / 0.991	1.069 / 0.991	1.069 / 0.991	1.069 / 0.991	1.069 / 0.991
25	Chisago 500/EauClaire 345	0.992 / 1.020	0.992 / 1.020	0.992 / 1.020	0.992 / 1.020	0.992 / 1.020
26	Int Falls 115/Badoura 115	1.021 / 1.025	1.021 / 1.025	1.021 / 1.025	1.021 / 1.025	1.021 / 1.025
27	Drayton 230/Groton 345	1.008 / 1.030	1.008 / 1.030	1.008 / 1.030	1.008 / 1.030	1.008 / 1.030
28	**SS OS Relay Margins**					
29	D602F at Forbes/Dorsey	218% / 348%	218% / 348%	218% / 348%	218% / 348%	218% / 348%
30	82R at Rugby/L20D at Drayton	999% / 844%	999% / 844%	999% / 844%	999% / 844%	999% / 844%
31	R50M/F3M	988% / 328%	988% / 328%	988% / 328%	988% / 328%	988% / 328%
32	B10T	335%	335%	335%	335%	335%
33	**Min/MaxTransientVltg**					
34	Arrowhd 230	0.94 | 1.01	0.94 | 1.03	0.99 | 1.03	0.99 | 1.03	0.92 | 1.02
35	Boise 115	0.99 | 1.04	0.99 | 1.04	0.99 | 1.03	0.99 | 1.05	0.98 | 1.05
36	Dorsey 230	1.03 | 1.06	1.02 | 1.06	1.03 | 1.05	1.02 | 1.06	1.01 | 1.06
37	Forbes 230	0.97 | 1.02	0.96 | 1.02	0.98 | 1.02	0.97 | 1.03	0.96 | 1.02
38	Riverton 230	0.95 | 1.04	0.93 | 1.05	0.96 | 1.04	0.95 | 1.06	0.92 | 1.06
39	Coal Creek 230	0.93 | 1.14	0.95 | 1.16	0.95 | 1.12	0.97 | 1.15	0.95 | 1.16
40	Dickinson 345	0.93 | 1.05	0.99 | 1.08	0.93 | 1.04	0.94 | 1.06	0.92 | 1.06
41	Drayton 230	0.97 | 1.11	0.96 | 1.10	0.97 | 1.10	0.96 | 1.11	0.94 | 1.13
42	Groton 345	0.88 | 1.10	0.85 | 1.12	0.88 | 1.06	0.87 | 1.11	0.81 | 1.14
43	Tioga 230	0.99 | 1.05	0.99 | 1.05	1.00 | 1.04	0.99 | 1.05	0.97 | 1.05
44	Wahpeton 115	0.90 | 1.10	0.88 | 1.10	0.91 | 1.08	0.87 | 1.12	0.83 | 1.14
45	Watertown 345	0.92 | 1.08	0.90 | 1.10	0.92 | 1.05	0.92 | 1.08	0.87 | 1.11
46	**Dynamic Voltage Warnings**					
47		none	none	none	63369 [JAMESTN3] 0.69	63199 [JAMSTN1Y] 0.64
48					63199 [JAMSTN1Y] 0.69	63200 [JAMSTN2Y] 0.64
49					63200 [JAMSTN2Y] 0.69	63369 [JAMESTN3] 0.64
50						63271 [AVIKO 7] 0.65
51						63272 [JAMESPK7] 0.65
52						63273 [JAMETAP7] 0.65
53						274 [JAMSDTN7] 0.65 +m
54	Worst Case Angle Damping					
55	Dorsey SUVP / UdHold	/ 0.175		/ 0.166		/ 0.166
56	Forbes DC Red (DCAR)	391%	507%	425%	339%	291%
57	K22W (max +dP @ t, d-ang)	19.8@(2.60832,-1.6)	46.9@(2.66665,-20.1)	14.4@(2.66665,-2.5)	18.9@(2.79165,-1.1)	42.0@(2.79998,-6.8)
58	K22W (max -dP @ t, d-ang)	24.0@(0.69166,3.4)	10.1@(0.51666,1.7)	21.5@(0.73333,2.5)	26.1@(0.92500,4.1)	32.0@(0.91666,8.2)
59	K22W (max d-ang @ t, dP)	8.2@(1.15000,-5.3)	-23.5@(2.18333,34.4)	7.0@(1.21666,-7.8)	8.4@(1.29166,-4.0)	13.7@(1.26666,-10.7)
60	**OS Rel Trip / Marg**					
61	MH - OH					
62	D602F at Forbes/Dorsey	164% / 255%	150% / 234%	155% / 239%	150% / 233%	143% / 222%
63	82R at Rugby/L20D at Drayton	999% / 649%	999% / 519%	999% / 720%	999% / 616%	999% / 501%
64	R50M / F3M	794% / 263%	777% / 228%	745% / 251%	736% / 246%	724% / 246%
65	B10T	157%	104%	219%	154%	94%
66	**FSCAPS (SS/Unav/Final)**					
67	Balta 230	(0 | 3 | 0)	(0 | 2 | 0)	(0 | 2 | 0)	(0 | 1 | 0)	(0 | 3 | 0)
68	Eau Cl 345 / Park Lk 115	(3 | 3 | 3) / (1 | 1 | 1)	(3 | 3 | 3) / (1 | 1 | 1)	(3 | 3 | 3) / (1 | 1 | 1)	(3 | 3 | 3) / (1 | 1 | 1)	(3 | 3 | 3) / (1 | 1 | 1)
69	Prairie 115 / Ramsey 230	(1 | 6 | 1) / (0 | 0 | 0)	(1 | 8 | 1) / (0 | 0 | 0)	(1 | 7 | 2) / (0 | 0 | 0)	(1 | 8 | 2) / (0 | 0 | 0)	(1 |10 | 2) / (0 | 0 | 0)
70	Roseau 230 / Running 230	(0 | 0 | 0) / (1 | 1 | 1)	(0 | 0 | 0) / (1 | 1 | 1)	(0 | 0 | 0) / (1 | 1 | 1)	(0 | 0 | 0) / (1 | 2 | 2)	(0 | 1 | 0) / (1 | 2 | 1)
71	Shey 115 / Split Rock 115	(2 | 5 | 1) / (2 | 2 | 2)	(2 | 5 | 1) / (2 | 2 | 2)	(2 | 5 | 3) / (2 | 2 | 2)	(2 | 5 | 1) / (2 | 2 | 2)	(2 | 5 | 0) / (2 | 2 | 2)
72	**Damping Performance**	N/A	N/A	N/A	N/A	N/A

Appendix A.6 - Simulation Summary Tables With 125 MW GI-0503

1	**Case No.**	16	17	18	19	20
2	**Case Name**	b02-so09aa-fd4	b02-so09aa-fd9	b02-so09aa-fdk	b02-so09aa-fdl	b02-so09aa-ha3
3	**Disturbance**	fd4	fd9	fdk	fdl	ha3
4	**Prior Outage**	None	None	None	None	None
5	**Date/Time**	NOV 10 2007 12:59	NOV 10 2007 12:51	NOV 10 2007 12:57	NOV 10 2007 13:00	NOV 10 2007 12:48
6	**Comments**					
7						
8	**Steady State Flows**					
9	NDEX / EAST BIAS	2080 / 293	2080 / 293	2080 / 293	2080 / 293	2080 / 293
10	MHEX / L20D	2175 / 236	2175 / 236	2175 / 236	2175 / 236	2175 / 236
11	ECL-ARP / PRI-BYN	528 / 721	528 / 721	528 / 721	528 / 721	528 / 721
12	MWSI / MNEX	1249	1249	1249	1249	1249
13	D602F / F601C	1826 / 1895	1826 / 1895	1826 / 1895	1826 / 1895	1826 / 1895
14	B10T / MH>SPC	164 / 20	164 / 20	164 / 20	164 / 20	164 / 20
15	OH E-W / OH>MH	99 / -195	99 / -195	99 / -195	99 / -195	99 / -195
16	R50M / OH>MP	137 / 150	137 / 150	137 / 150	137 / 150	137 / 150
17	G82R	-24	-24	-24	-24	-24
18	Dorsey bipole / CU bipole	3228 / 1104	3228 / 1104	3228 / 1104	3228 / 1104	3228 / 1104
19	Dorsey Reserve / Wtrtn SVC	198 / 16	198 / 16	198 / 16	198 / 16	198 / 16
20	Forbes SVC / MSC	5 / 600	5 / 600	5 / 600	5 / 600	5 / 600
21	Arrowhd-Wstn/ RCDC	554 / 0	554 / 0	554 / 0	554 / 0	554 / 0
22	**Steady State Vltgs**					
23	Dorsey 500/Dorsey 230	1.039 / 1.045	1.039 / 1.045	1.039 / 1.045	1.039 / 1.045	1.039 / 1.045
24	Roseau 500/Forbes 500	1.069 / 0.991	1.069 / 0.991	1.069 / 0.991	1.069 / 0.991	1.069 / 0.991
25	Chisago 500/EauClaire 345	0.992 / 1.020	0.992 / 1.020	0.992 / 1.020	0.992 / 1.020	0.992 / 1.020
26	Int Falls 115/Badoura 115	1.021 / 1.025	1.021 / 1.025	1.021 / 1.025	1.021 / 1.025	1.021 / 1.025
27	Drayton 230/Groton 345	1.008 / 1.030	1.008 / 1.030	1.008 / 1.030	1.008 / 1.030	1.008 / 1.030
28	**SS OS Relay Margins**					
29	D602F at Forbes/Dorsey	218% / 348%	218% / 348%	218% / 348%	218% / 348%	218% / 348%
30	82R at Rugby/L20D at Drayton	999% / 844%	999% / 844%	999% / 844%	999% / 844%	999% / 844%
31	R50M/F3M	988% / 328%	988% / 328%	988% / 328%	988% / 328%	988% / 328%
32	B10T	335%	335%	335%	335%	335%
33	**Min/MaxTransientVltg**					
34	Arrowhd 230	0.93 | 1.01	0.94 | 1.01	1.00 | 1.05	0.94 | 1.03	1.00 | 1.00
35	Boise 115	0.99 | 1.04	0.99 | 1.03	1.00 | 1.03	1.00 | 1.04	1.02 | 1.02
36	Dorsey 230	1.02 | 1.06	1.02 | 1.06	1.03 | 1.06	1.03 | 1.06	1.04 | 1.05
37	Forbes 230	0.97 | 1.02	0.97 | 1.02	0.99 | 1.02	0.98 | 1.02	1.00 | 1.00
38	Riverton 230	0.95 | 1.06	0.95 | 1.05	0.99 | 1.05	0.98 | 1.05	1.02 | 1.02
39	Coal Creek 230	0.96 | 1.15	0.96 | 1.14	0.97 | 1.11	0.96 | 1.11	1.03 | 1.05
40	Dickinson 345	0.94 | 1.06	0.93 | 1.05	0.95 | 1.04	0.95 | 1.05	1.00 | 1.01
41	Drayton 230	0.96 | 1.12	0.96 | 1.09	0.98 | 1.06	0.97 | 1.09	1.02 | 1.03
42	Groton 345	0.88 | 1.13	0.89 | 1.10	0.96 | 1.10	0.96 | 1.12	1.03 | 1.05
43	Tioga 230	0.98 | 1.05	0.99 | 1.04	1.00 | 1.04	0.99 | 1.04	1.02 | 1.03
44	Wahpeton 115	0.87 | 1.14	0.89 | 1.11	0.96 | 1.11	0.96 | 1.12	1.04 | 1.05
45	Watertown 345	0.92 | 1.10	0.93 | 1.08	0.99 | 1.08	0.99 | 1.10	1.04 | 1.04
46	**Dynamic Voltage Warnings**					
47		63199 [JAMSTN1Y] 0.67	none	none	none	none
48		63200 [JAMSTN2Y] 0.67				
49		63369 [JAMESTN3] 0.67				
50		63270 [LADISH 7] 0.68				
51		63271 [AVIKO 7] 0.68				
52		63272 [JAMESPK7] 0.68				
53		273 [JAMETAP7] 0.68 +m				
54	Worst Case Angle Damping					
55	Dorsey SUVP / UdHold		/ 0.166			
56	Forbes DC Red (DCAR)	332%	384%	472%	483%	503%
57	K22W (max +dP @ t, d-ang)	24.1@(2.73332,-1.2)	20.5@(2.66665,-1.5)	41.4@(2.49999,-16.3)	44.8@(2.49999,-15.9)	13.7@(2.05833,-5.1)
58	K22W (max -dP @ t, d-ang)	25.4@(0.88333,4.6)	20.0@(0.75833,3.5)	2.5@(0.31667,-0.2)	2.7@(0.57500,-0.9)	0.8@(0.25000,0.0)
59	K22W (max d-ang @ t, dP)	9.5@(1.25000,-2.5)	8.1@(1.17500,-4.6)	-18.4@(1.95833,29.4)	-18.3@(1.95000,29.7)	-5.3@(2.39999,12.0)
60	**OS Rel Trip / Marg**					
61	MH - OH					
62	D602F at Forbes/Dorsey	160% / 250%	167% / 261%	185% / 292%	185% / 290%	217% / 346%
63	82R at Rugby/L20D at Drayton	999% / 571%	999% / 615%	999% / 609%	999% / 544%	999% / 798%
64	R50M / F3M	783% / 257%	805% / 265%	829% / 242%	825% / 246%	984% / 310%
65	B10T	123%	150%	145%	121%	259%
66	**FSCAPS (SS/Unav/Final)**					
67	Balta 230	(0 | 1 | 0)	(0 | 3 | 0)	(0 | 0 | 0)	(0 | 1 | 0)	(0 | 0 | 0)
68	Eau Cl 345 / Park Lk 115	(3 | 3 | 3) / (1 | 1 | 1)	(3 | 3 | 3) / (1 | 1 | 1)	(3 | 3 | 3) / (1 | 1 | 1)	(3 | 3 | 3) / (1 | 1 | 1)	(3 | 3 | 3) / (1 | 1 | 1)
69	Prairie 115 / Ramsey 230	(1 | 7 | 2) / (0 | 0 | 0)	(1 | 7 | 2) / (0 | 0 | 0)	(1 | 3 | 1) / (0 | 0 | 0)	(1 | 6 | 1) / (0 | 0 | 0)	(1 | 2 | 2) / (0 | 0 | 0)
70	Roseau 230 / Running 230	(0 | 0 | 0) / (1 | 1 | 1)	(0 | 0 | 0) / (1 | 1 | 1)	(0 | 0 | 0) / (1 | 1 | 1)	(0 | 0 | 0) / (1 | 1 | 1)	(0 | 0 | 0) / (1 | 1 | 1)
71	Shey 115 / Split Rock 115	(2 | 5 | 0) / (2 | 2 | 2)	(2 | 5 | 1) / (2 | 2 | 2)	(2 | 5 | 0) / (2 | 2 | 2)	(2 | 5 | 0) / (2 | 2 | 2)	(2 | 2 | 2) / (2 | 2 | 2)
72	**Damping Performance**	N/A	N/A	N/A	N/A	N/A

Appendix A.6 - Simulation Summary Tables With 125 MW GI-0503

1	**Case No.**	21	22	23	24	25
2	**Case Name**	b02-so09aa-ha3-nt	b02-so09aa-hb3	b02-so09aa-hb3-nt	b02-so09aa-nbz	b02-so09aa-nmz
3	**Disturbance**	-nt	hb3	-nt	nbz	nmz
4	**Prior Outage**	None	None	None	None	None
5	**Date/Time**	NOV 10 2007 13:24	NOV 10 2007 12:49	NOV 10 2007 13:25	NOV 10 2007 12:45	NOV 10 2007 13:22
6	**Comments**					
7						
8	**Steady State Flows**					
9	NDEX / EAST BIAS	2080 / 293	2080 / 293	2080 / 293	2080 / 293	2080 / 293
10	MHEX / L20D	2175 / 236	2175 / 236	2175 / 236	2175 / 236	2175 / 236
11	ECL-ARP / PRI-BYN	528 / 721	528 / 721	528 / 721	528 / 721	528 / 721
12	MWSI / MNEX	1249	1249	1249	1249	1249
13	D602F / F601C	1826 / 1895	1826 / 1895	1826 / 1895	1826 / 1895	1826 / 1895
14	B10T / MH>SPC	164 / 20	164 / 20	164 / 20	164 / 20	164 / 20
15	OH E-W / OH>MH	99 / -195	99 / -195	99 / -195	99 / -195	99 / -195
16	R50M / OH>MP	137 / 150	137 / 150	137 / 150	137 / 150	137 / 150
17	G82R	-24	-24	-24	-24	-24
18	Dorsey bipole / CU bipole	3228 / 1104	3228 / 1104	3228 / 1104	3228 / 1104	3228 / 1104
19	Dorsey Reserve / Wtrtn SVC	198 / 16	198 / 16	198 / 16	198 / 16	198 / 16
20	Forbes SVC / MSC	5 / 600	5 / 600	5 / 600	5 / 600	5 / 600
21	Arrowhd-Wstn/ RCDC	554 / 0	554 / 0	554 / 0	554 / 0	554 / 0
22	**Steady State Vltgs**					
23	Dorsey 500/Dorsey 230	1.039 / 1.045	1.039 / 1.045	1.039 / 1.045	1.039 / 1.045	1.039 / 1.045
24	Roseau 500/Forbes 500	1.069 / 0.991	1.069 / 0.991	1.069 / 0.991	1.069 / 0.991	1.069 / 0.991
25	Chisago 500/EauClaire 345	0.992 / 1.020	0.992 / 1.020	0.992 / 1.020	0.992 / 1.020	0.992 / 1.020
26	Int Falls 115/Badoura 115	1.021 / 1.025	1.021 / 1.025	1.021 / 1.025	1.021 / 1.025	1.021 / 1.025
27	Drayton 230/Groton 345	1.008 / 1.030	1.008 / 1.030	1.008 / 1.030	1.008 / 1.030	1.008 / 1.030
28	**SS OS Relay Margins**					
29	D602F at Forbes/Dorsey	218% / 348%	218% / 348%	218% / 348%	218% / 348%	218% / 348%
30	82R at Rugby/L20D at Drayton	999% / 844%	999% / 844%	999% / 844%	999% / 844%	999% / 844%
31	R50M/F3M	988% / 328%	988% / 328%	988% / 328%	988% / 328%	988% / 328%
32	B10T	335%	335%	335%	335%	335%
33	**Min/MaxTransientVltg**					
34	Arrowhd 230	0.99 | 1.00	1.00 | 1.00	0.99 | 1.00	(0.65)0.73 | 1.06	(0.57)0.80 | 1.04
35	Boise 115	1.02 | 1.02	1.02 | 1.02	1.02 | 1.02	0.96 | 1.05	0.96 | 1.05
36	Dorsey 230	1.04 | 1.05	1.04 | 1.05	1.04 | 1.05	1.05 | 1.21	1.05 | 1.21
37	Forbes 230	1.00 | 1.00	1.00 | 1.00	1.00 | 1.00	0.85 | 1.07	0.95 | 1.02
38	Riverton 230	1.01 | 1.02	1.02 | 1.02	1.01 | 1.02	0.77 | 1.06	0.81 | 1.04
39	Coal Creek 230	1.03 | 1.05	1.03 | 1.05	1.03 | 1.04	0.91 | 1.13	0.91 | 1.13
40	Dickinson 345	1.00 | 1.01	1.00 | 1.01	1.00 | 1.01	0.88 | 1.09	0.89 | 1.08
41	Drayton 230	1.02 | 1.02	1.02 | 1.03	1.02 | 1.02	0.96 | 1.09	0.97 | 1.09
42	Groton 345	1.03 | 1.04	1.03 | 1.05	1.03 | 1.04	0.80 | 1.10	0.82 | 1.08
43	Tioga 230	1.02 | 1.02	1.02 | 1.03	1.02 | 1.02	0.97 | 1.06	0.98 | 1.06
44	Wahpeton 115	1.04 | 1.05	1.04 | 1.05	1.04 | 1.04	0.82 | 1.10	0.84 | 1.09
45	Watertown 345	1.03 | 1.04	1.04 | 1.04	1.03 | 1.04	0.83 | 1.09	0.85 | 1.06
46	**Dynamic Voltage Warnings**					
47		none	none	none	61614 [98L TAP4] 0.78	61614 [98L TAP4] 0.80
48					61615 [ARROWHD4] 0.78	61615 [ARROWHD4] 0.80
49					61616 [HILLTOP4] 0.78	61616 [HILLTOP4] 0.80
50					61673 [ARROWHD7] 0.79	61674 [HANESRD7] 0.81
51					61686 [15TH AV7] 0.79	61686 [15TH AV7] 0.81
52					61687 [MIDWAY 7] 0.79	61673 [ARROWHD7] 0.81
53					74 [HANESRD7] 0.79 +m	75 [RIDGEVW7] 0.81 +m
54	Worst Case Angle Damping					
55	Dorsey SUVP / UdHold				/ 0.133	/ 0.133
56	Forbes DC Red (DCAR)	503%	503%	499%	507%	507%
57	K22W (max +dP @ t, d-ang)	2.4@(2.20833,-0.7)	13.7@(2.05833,-5.1)	3.7@(2.35832,-1.2)	161.9@(2.69165,-62.6)	147.9@(2.63332,-59.5)
58	K22W (max -dP @ t, d-ang)	1.2@(0.28333,0.0)	0.8@(0.25000,0.0)	0.8@(0.25833,0.0)	91.8@(0.24167,7.4)	92.9@(0.23333,7.1)
59	K22W (max d-ang @ t, dP)	-0.9@(1.52500,1.0)	-5.2@(2.39999,12.0)	-1.3@(1.65833,2.4)	-63.5@(2.50832,147.6)	-60.6@(2.44166,138.1)
60	**OS Rel Trip / Marg**					
61	MH - OH					
62	D602F at Forbes/Dorsey	217% / 346%	217% / 346%	217% / 347%	0.18333 sec / 0.18333 sec	0.18333 sec / 0.18333 sec
63	82R at Rugby/L20D at Drayton	999% / 831%	999% / 798%	999% / 843%	999% / 489%	999% / 518%
64	R50M / F3M	979% / 323%	984% / 310%	982% / 323%	550% / 136%	536% / 161%
65	B10T	318%	208%	297%	85%	101%
66	**FSCAPS (SS/Unav/Final)**					
67	Balta 230	(0 | 0 | 0)	(0 | 0 | 0)	(0 | 0 | 0)	(0 | 2 | 0)	(0 | 2 | 0)
68	Eau Cl 345 / Park Lk 115	(3 | 3 | 3) / (1 | 1 | 1)	(3 | 3 | 3) / (1 | 1 | 1)	(3 | 3 | 3) / (1 | 1 | 1)	(3 | 3 | 1) / (1 | 1 | 1)	(3 | 3 | 1) / (1 | 1 | 1)
69	Prairie 115 / Ramsey 230	(1 | 2 | 2) / (0 | 0 | 0)	(1 | 2 | 2) / (0 | 0 | 0)	(1 | 2 | 2) / (0 | 0 | 0)	(1 | 5 | 1) / (0 | 0 | 0)	(1 | 5 | 1) / (0 | 0 | 0)
70	Roseau 230 / Running 230	(0 | 0 | 0) / (1 | 1 | 1)	(0 | 0 | 0) / (1 | 1 | 1)	(0 | 0 | 0) / (1 | 1 | 1)	(0 | 0 | 0) / (1 | 2 | 0)	(0 | 0 | 0) / (1 | 4 | 1)
71	Shey 115 / Split Rock 115	(2 | 2 | 2) / (2 | 2 | 2)	(2 | 2 | 2) / (2 | 2 | 2)	(2 | 2 | 2) / (2 | 2 | 2)	(2 | 5 | 2) / (2 | 2 | 2)	(2 | 5 | 2) / (2 | 2 | 2)
72	**Damping Performance**	N/A	N/A	N/A	N/A	N/A

Appendix A.6 - Simulation Summary Tables With 125 MW GI-0503

1	**Case No.**	26	27	28	29	30
2	**Case Name**	b02-so09aa-pcs	b02-so09aa-pct	b02-so09aa-pys	b02-so09aa-pyt	b02-so09aa-ya3
3	**Disturbance**	pcs	pct	pys	pyt	ya3
4	**Prior Outage**	None	None	None	None	None
5	**Date/Time**	NOV 10 2007 13:04	NOV 10 2007 13:08	NOV 10 2007 13:13	NOV 10 2007 13:18	NOV 10 2007 12:47
6	**Comments**					
7						
8	**Steady State Flows**					
9	NDEX / EAST BIAS	2080 / 293	2080 / 293	2080 / 293	2080 / 293	2080 / 293
10	MHEX / L20D	2175 / 236	2175 / 236	2175 / 236	2175 / 236	2175 / 236
11	ECL-ARP / PRI-BYN	528 / 721	528 / 721	528 / 721	528 / 721	528 / 721
12	MWSI / MNEX	1249	1249	1249	1249	1249
13	D602F / F601C	1826 / 1895	1826 / 1895	1826 / 1895	1826 / 1895	1826 / 1895
14	B10T / MH>SPC	164 / 20	164 / 20	164 / 20	164 / 20	164 / 20
15	OH E-W / OH>MH	99 / -195	99 / -195	99 / -195	99 / -195	99 / -195
16	R50M / OH>MP	137 / 150	137 / 150	137 / 150	137 / 150	137 / 150
17	G82R	-24	-24	-24	-24	-24
18	Dorsey bipole / CU bipole	3228 / 1104	3228 / 1104	3228 / 1104	3228 / 1104	3228 / 1104
19	Dorsey Reserve / Wtrtn SVC	198 / 16	198 / 16	198 / 16	198 / 16	198 / 16
20	Forbes SVC / MSC	5 / 600	5 / 600	5 / 600	5 / 600	5 / 600
21	Arrowhd-Wstn/ RCDC	554 / 0	554 / 0	554 / 0	554 / 0	554 / 0
22	**Steady State Vltgs**					
23	Dorsey 500/Dorsey 230	1.039 / 1.045	1.039 / 1.045	1.039 / 1.045	1.039 / 1.045	1.039 / 1.045
24	Roseau 500/Forbes 500	1.069 / 0.991	1.069 / 0.991	1.069 / 0.991	1.069 / 0.991	1.069 / 0.991
25	Chisago 500/EauClaire 345	0.992 / 1.020	0.992 / 1.020	0.992 / 1.020	0.992 / 1.020	0.992 / 1.020
26	Int Falls 115/Badoura 115	1.021 / 1.025	1.021 / 1.025	1.021 / 1.025	1.021 / 1.025	1.021 / 1.025
27	Drayton 230/Groton 345	1.008 / 1.030	1.008 / 1.030	1.008 / 1.030	1.008 / 1.030	1.008 / 1.030
28	**SS OS Relay Margins**					
29	D602F at Forbes/Dorsey	218% / 348%	218% / 348%	218% / 348%	218% / 348%	218% / 348%
30	82R at Rugby/L20D at Drayton	999% / 844%	999% / 844%	999% / 844%	999% / 844%	999% / 844%
31	R50M/F3M	988% / 328%	988% / 328%	988% / 328%	988% / 328%	988% / 328%
32	B10T	335%	335%	335%	335%	335%
33	**Min/MaxTransientVltg**					
34	Arrowhd 230	0.86 | 0.98	0.94 | 0.97	0.97 | 1.00	0.98 | 1.00	0.98 | 0.99
35	Boise 115	0.99 | 1.05	1.02 | 1.03	1.00 | 1.05	1.02 | 1.03	1.02 | 1.04
36	Dorsey 230	1.02 | 1.09	1.04 | 1.05	1.02 | 1.07	1.04 | 1.05	1.04 | 1.06
37	Forbes 230	0.98 | 1.02	0.99 | 1.00	0.99 | 1.04	1.00 | 1.01	0.99 | 1.00
38	Riverton 230	0.99 | 1.02	1.01 | 1.03	1.00 | 1.03	1.01 | 1.03	1.00 | 1.01
39	Coal Creek 230	0.96 | 1.07	1.02 | 1.05	0.98 | 1.07	1.02 | 1.05	1.02 | 1.05
40	Dickinson 345	0.95 | 1.04	0.98 | 1.01	0.97 | 1.04	0.99 | 1.01	0.97 | 1.00
41	Drayton 230	0.98 | 1.03	1.00 | 1.02	0.98 | 1.03	1.00 | 1.02	1.00 | 1.02
42	Groton 345	0.97 | 1.04	1.02 | 1.04	0.99 | 1.04	1.02 | 1.04	1.01 | 1.03
43	Tioga 230	0.98 | 1.03	1.02 | 1.03	0.99 | 1.03	1.02 | 1.03	1.01 | 1.03
44	Wahpeton 115	1.00 | 1.06	1.04 | 1.05	1.01 | 1.06	1.04 | 1.05	1.03 | 1.05
45	Watertown 345	0.99 | 1.04	1.03 | 1.04	1.01 | 1.04	1.03 | 1.04	1.02 | 1.03
46	**Dynamic Voltage Warnings**					
47		none	none	none	none	none
48						
49						
50						
51						
52						
53						
54	Worst Case Angle Damping	SHERC3 / 66.74%	SHERC3 / 56.39%	SHERC3 / 72.71%	SHERC3 / 60.02%	
55	Dorsey SUVP / UdHold					
56	Forbes DC Red (DCAR)	163%	308%	149%	347%	401%
57	K22W (max +dP @ t, d-ang)	7.6@(3.54997,1.7)	0.0@(0.02500,0.0)	7.6@(3.49997,0.0)	0.0@(0.02500,0.0)	3.2@(0.11667,0.6)
58	K22W (max -dP @ t, d-ang)	52.3@(1.73333,19.2)	26.7@(2.29166,12.3)	36.0@(1.71666,11.5)	19.6@(1.85833,8.7)	26.2@(1.70000,12.2)
59	K22W (max d-ang @ t, dP)	28.8@(1.15000,-41.7)	12.4@(2.19166,-26.7)	21.2@(1.12500,-25.1)	9.1@(2.17499,-18.7)	12.4@(1.96666,-22.8)
60	**OS Rel Trip / Marg**					
61	MH - OH					
62	D602F at Forbes/Dorsey	164% / 254%	218% / 348%	166% / 257%	218% / 348%	212% / 338%
63	82R at Rugby/L20D at Drayton	999% / 557%	999% / 777%	999% / 612%	999% / 780%	999% / 735%
64	R50M / F3M	669% / 328%	915% / 328%	729% / 307%	956% / 328%	987% / 328%
65	B10T	146%	292%	175%	290%	267%
66	**FSCAPS (SS/Unav/Final)**					
67	Balta 230	(0 | 0 | 0)	(0 | 0 | 0)	(0 | 0 | 0)	(0 | 0 | 0)	(0 | 0 | 0)
68	Eau Cl 345 / Park Lk 115	(3 | 4 | 2) / (1 | 3 | 3)	(3 | 3 | 2) / (1 | 1 | 1)	(3 | 4 | 4) / (1 | 3 | 3)	(3 | 3 | 3) / (1 | 1 | 1)	(3 | 4 | 4) / (1 | 1 | 1)
69	Prairie 115 / Ramsey 230	(1 | 2 | 2) / (0 | 0 | 0)	(1 | 1 | 1) / (0 | 0 | 0)	(1 | 1 | 1) / (0 | 0 | 0)	(1 | 1 | 1) / (0 | 0 | 0)	(1 | 1 | 1) / (0 | 0 | 0)
70	Roseau 230 / Running 230	(0 | 0 | 0) / (1 | 1 | 1)	(0 | 0 | 0) / (1 | 1 | 1)	(0 | 0 | 0) / (1 | 1 | 1)	(0 | 0 | 0) / (1 | 1 | 1)	(0 | 0 | 0) / (1 | 1 | 1)
71	Shey 115 / Split Rock 115	(2 | 3 | 3) / (2 | 2 | 2)	(2 | 2 | 2) / (2 | 2 | 2)	(2 | 2 | 2) / (2 | 2 | 2)	(2 | 2 | 2) / (2 | 2 | 2)	(2 | 2 | 2) / (2 | 2 | 2)
72	**Damping Performance**	N/A	N/A	N/A	N/A	N/A

Appendix A.6 - Simulation Summary Tables With 125 MW GI-0503

1	**Case No.**	31
2	**Case Name**	b02-so09aa-yas
3	**Disturbance**	yas
4	**Prior Outage**	None
5	**Date/Time**	NOV 10 2007 13:02
6	**Comments**	
7		
8	**Steady State Flows**	
9	NDEX / EAST BIAS	2080 / 293
10	MHEX / L20D	2175 / 236
11	ECL-ARP / PRI-BYN	528 / 721
12	MWSI / MNEX	1249
13	D602F / F601C	1826 / 1895
14	B10T / MH>SPC	164 / 20
15	OH E-W / OH>MH	99 / -195
16	R50M / OH>MP	137 / 150
17	G82R	-24
18	Dorsey bipole / CU bipole	3228 / 1104
19	Dorsey Reserve / Wtrtn SVC	198 / 16
20	Forbes SVC / MSC	5 / 600
21	Arrowhd-Wstn/ RCDC	554 / 0
22	**Steady State Vltgs**	
23	Dorsey 500/Dorsey 230	1.039 / 1.045
24	Roseau 500/Forbes 500	1.069 / 0.991
25	Chisago 500/EauClaire 345	0.992 / 1.020
26	Int Falls 115/Badoura 115	1.021 / 1.025
27	Drayton 230/Groton 345	1.008 / 1.030
28	**SS OS Relay Margins**	
29	D602F at Forbes/Dorsey	218% / 348%
30	82R at Rugby/L20D at Drayton	999% / 844%
31	R50M/F3M	988% / 328%
32	B10T	335%
33	**Min/MaxTransientVltg**	
34	Arrowhd 230	0.90 | 0.97
35	Boise 115	1.01 | 1.04
36	Dorsey 230	1.04 | 1.07
37	Forbes 230	0.98 | 1.01
38	Riverton 230	0.97 | 1.02
39	Coal Creek 230	0.98 | 1.06
40	Dickinson 345	0.93 | 1.00
41	Drayton 230	0.99 | 1.02
42	Groton 345	1.01 | 1.03
43	Tioga 230	1.01 | 1.03
44	Wahpeton 115	1.02 | 1.05
45	Watertown 345	1.02 | 1.03
46	**Dynamic Voltage Warnings**	
47		39449] 1.21
48		
49		
50		
51		
52		
53		
54	Worst Case Angle Damping	
55	Dorsey SUVP / UdHold	
56	Forbes DC Red (DCAR)	434%
57	K22W (max +dP @ t, d-ang)	2.2@(0.11667,0.3)
58	K22W (max -dP @ t, d-ang)	23.7@(1.61666,10.4)
59	K22W (max d-ang @ t, dP)	11.6@(1.10000,-15.6)
60	**OS Rel Trip / Marg**	
61	MH - OH	
62	D602F at Forbes/Dorsey	195% / 309%
63	82R at Rugby/L20D at Drayton	999% / 729%
64	R50M / F3M	909% / 328%
65	B10T	262%
66	**FSCAPS (SS/Unav/Final)**	
67	Balta 230	(0 | 0 | 0)
68	Eau Cl 345 / Park Lk 115	(3 | 3 | 3) / (1 | 1 | 1)
69	Prairie 115 / Ramsey 230	(1 | 1 | 1) / (0 | 0 | 0)
70	Roseau 230 / Running 230	(0 | 0 | 0) / (1 | 1 | 1)
71	Shey 115 / Split Rock 115	(2 | 2 | 2) / (2 | 2 | 2)
72	**Damping Performance**	N/A

Appendix A.7 - Simulation Summary Tables With NMZ Sensitivity

1	**Case No.**	1	2	3	4
2	**Case Name**	b00-so09aa-nmz	bs0-so09aa-nmz	b01-so09aa-nmz	bs1-so09aa-nmz
3	**Disturbance**	nmz	nmz	nmz	nmz
4	**Prior Outage**	None	None	None	None
5	**Date/Time**	OCT 19 2007 12:06	JAN 25 2008 11:44	JAN 25 2008 0:16	JAN 25 2008 11:52
6	**Comments**				
7					
8	**Steady State Flows**				
9	NDEX / EAST BIAS	2080 / 297	2080 / 312	2080 / 293	2081 / 308
10	MHEX / L20D	2175 / 230	2175 / 220	2175 / 235	2175 / 225
11	ECL-ARP / PRI-BYN	528 / 721	526 / 719	528 / 721	526 / 719
12	MWSI / MNEX	1249	1246	1249	1246
13	D602F / F601C	1826 / 1898	1839 / 1765	1826 / 1895	1839 / 1765
14	B10T / MH>SPC	164 / 20	166 / 22	164 / 20	165 / 21
15	OH E-W / OH>MH	99 / -195	97 / -198	99 / -195	98 / -196
16	R50M / OH>MP	136 / 150	142 / 150	137 / 150	142 / 150
17	G82R	-18	-27	-23	-32
18	Dorsey bipole / CU bipole	3228 / 1104	3231 / 1104	3228 / 1104	3229 / 1104
19	Dorsey Reserve / Wtrtn SVC	197 / -29	226 / -41	198 / 17	228 / 5
20	Forbes SVC / MSC	5 / 600	23 / 600	5 / 600	26 / 600
21	Arrowhd-Wstn/ RCDC	554 / 0	554 / 0	554 / 0	554 / 0
22	**Steady State Vltgs**				
23	Dorsey 500/Dorsey 230	1.039 / 1.045	1.041 / 1.045	1.039 / 1.045	1.041 / 1.045
24	Roseau 500/Forbes 500	1.069 / 0.991	1.069 / 1.002	1.069 / 0.991	1.069 / 1.002
25	Chisago 500/EauClaire 345	0.992 / 1.021	1.001 / 1.023	0.992 / 1.020	1.001 / 1.023
26	Int Falls 115/Badoura 115	1.021 / 1.025	1.022 / 1.029	1.021 / 1.025	1.022 / 1.028
27	Drayton 230/Groton 345	1.005 / 1.029	1.007 / 1.031	1.008 / 1.030	1.010 / 1.031
28	**SS OS Relay Margins**				
29	D602F at Forbes/Dorsey	218% / 347%	221% / 351%	218% / 347%	221% / 351%
30	82R at Rugby/L20D at Drayton	999% / 862%	999% / 913%	999% / 847%	999% / 897%
31	R50M/F3M	989% / 328%	936% / 329%	988% / 328%	934% / 329%
32	B10T	336%	330%	335%	332%
33	**Min/MaxTransientVltg**				
34	Arrowhd 230	(0.58)0.80 | 1.04	0.90 | 1.06	(0.57)0.80 | 1.04	0.89 | 1.05
35	Boise 115	0.96 | 1.05	0.95 | 1.05	0.96 | 1.05	0.95 | 1.05
36	Dorsey 230	1.05 | 1.21	1.04 | 1.21	1.05 | 1.21	1.04 | 1.21
37	Forbes 230	0.95 | 1.02	0.98 | 1.03	0.95 | 1.02	0.98 | 1.03
38	Riverton 230	0.81 | 1.04	0.87 | 1.05	0.81 | 1.04	0.87 | 1.05
39	Coal Creek 230	0.91 | 1.13	0.93 | 1.11	0.92 | 1.13	0.93 | 1.11
40	Dickinson 345	0.89 | 1.08	0.92 | 1.07	0.89 | 1.08	0.91 | 1.07
41	Drayton 230	0.96 | 1.09	0.98 | 1.08	0.97 | 1.09	0.97 | 1.08
42	Groton 345	0.83 | 1.08	0.86 | 1.08	0.82 | 1.08	0.85 | 1.08
43	Tioga 230	0.98 | 1.06	0.98 | 1.06	0.98 | 1.06	0.98 | 1.06
44	Wahpeton 115	0.85 | 1.09	0.88 | 1.09	0.84 | 1.09	0.86 | 1.09
45	Watertown 345	0.86 | 1.07	0.89 | 1.07	0.85 | 1.06	0.88 | 1.07
46	**Dynamic Voltage Warnings**				
47		61615 [ARROWHD4] 0.80		61615 [ARROWHD4] 0.80	
48		61614 [98L TAP4] 0.80		61614 [98L TAP4] 0.80	
49		61616 [HILLTOP4] 0.80		61616 [HILLTOP4] 0.80	
50		61673 [ARROWHD7] 0.81		61674 [HANESRD7] 0.81	
51		61674 [HANESRD7] 0.81		61686 [15TH AV7] 0.81	
52		61675 [RIDGEVW7] 0.81		61687 [MIDWAY 7] 0.81	
53		61686 [15TH AV7] 0.81 +mo		73 [ARROWHD7] 0.81 +m	
54	Worst Case Angle Damping				
55	Dorsey SUVP / UdHold	/ 0.133	/ 0.133	/ 0.133	/ 0.133
56	Forbes DC Red (DCAR)	507%	507%	507%	507%
57	K22W (max +dP @ t, d-ang)	148.0@(2.61665,-59.6)	135.3@(2.55832,-59.6)	147.8@(2.63332,-59.5)	136.8@(2.58332,-59.7)
58	K22W (max -dP @ t, d-ang)	92.9@(0.23333,7.1)	91.8@(0.23333,7.0)	92.9@(0.23333,7.1)	91.7@(0.23333,7.0)
59	K22W (max d-ang @ t, dP)	-60.8@(2.41666,137.5)	-61.4@(2.34166,130.0)	-60.7@(2.44166,138.3)	-61.5@(2.35832,130.3)
60	**OS Rel Trip / Marg**				
61	MH - OH				
62	D602F at Forbes/Dorsey	0.18333 sec / 0.18333 sec	0.18333 sec / 0.18333 sec	0.18333 sec / 0.18333 sec	0.18333 sec / 0.18333 sec
63	82R at Rugby/L20D at Drayton	999% / 526%	999% / 552%	999% / 519%	999% / 554%
64	R50M / F3M	538% / 160%	445% / 158%	536% / 161%	444% / 160%
65	B10T	100%	114%	101%	114%
66	**FSCAPS (SS/Unav/Final)**				
67	Balta 230	(0 | 2 | 0)	(0 | 1 | 0)	(0 | 2 | 0)	(0 | 2 | 0)
68	Eau Cl 345 / Park Lk 115	(3 | 3 | 1) / (1 | 1 | 1)	(3 | 3 | 1) / (1 | 1 | 1)	(3 | 3 | 1) / (1 | 1 | 1)	(3 | 3 | 1) / (1 | 1 | 1)
69	Prairie 115 / Ramsey 230	(1 | 4 | 1) / (0 | 0 | 0)	(1 | 4 | 1) / (0 | 0 | 0)	(1 | 5 | 1) / (0 | 0 | 0)	(1 | 4 | 1) / (0 | 0 | 0)
70	Roseau 230 / Running 230	(0 | 0 | 0) / (1 | 4 | 1)	(0 | 1 | 0) / (1 | 3 | 1)	(0 | 0 | 0) / (1 | 4 | 1)	(0 | 1 | 0) / (1 | 3 | 1)
71	Shey 115 / Split Rock 115	(2 | 5 | 2) / (2 | 2 | 2)	(2 | 5 | 2) / (2 | 2 | 2)	(2 | 5 | 2) / (2 | 2 | 2)	(2 | 5 | 3) / (2 | 2 | 2)
72	**Damping Performance**	N/A	N/A	N/A	N/A

Table A

Appendix A.8: Summary for Case g00-so09aa.sav (Without GI-0503)

```
INITIATED AT LOAD FLOW ENTRY POINT ON FRI, MAR 14 2008  18:08

G00-SO09AA.SAV;SUMMER;OP LD;SYSTEM INTACT           :
ND=2449,MH=2175,MW=1250,OHMH=-197,OHMP=150,EWTW=97,BD=165


                    P O W E R   F L O W   S U M M A R Y
-----------------------------------------------------------------------------
               NDEX:      2449 MW         ECL-ARP:  533 MW
               MHEX:      2175 MW         PRI-BYN:  717 MW
               MWSI:      1250 MW         AHD-GPK:  554 MW
                                          NI-WUMS:  151 MW
               COOPER S:  1109 MW         WNE-WKS:  522 MW
               FTCAL S:    705 MW         GGS:     1509 MW
               GRIS-LNC:   698 MW         QC WEST:  -74 MW

           LOAD LEVELS AS PERCENT OF 2009 SUMMER PEAK:
           NORTH DAKOTA (ZONE 90,990) 2087.3 MW,  71.4% OF  2925.0 MW
           NSP             (AREA 600)  9071.2 MW,  94.2% OF  9632.0 MW
           MAN HYDRO       (AREA 667) 2126.0 MW,  71.7% OF  2964.0 MW

Load/Losses   MW  / MW       Generation        MW       Export            MW
----------- ------ -----     --------------- ------     --------------- ------
Manitoba      2126/ 267      MH total gross    4724     SPARE                0
Ont. total   22150/ 482         Wpg River       534     SPARE                0
     NW        915/  45         7 Sisters       165     SPARE                0
Sask.         1944/  85      OH total gross   21779     East Bias          352
MP            1944/ 225         northwest       816     SPC>WAPA (B10T)    165
NSP           9071/ 607      SPC total gross   2240     MH>SPC  (3-230)     21
N. Dakota     2087/ 285      MP total gross    2805     MH>SPC  (FALLS)    -66
Manitoba       450 MVARS     ND Cfd AC gross   3256     OH>MH  @Kenora    -197
Ont. total   13082 MVARS               net      3085     OH>MP  @Ft Fran    150
     NW        489 MVARS     NSP East gross    1609     OH E>W @Wawa        97
Sask.          453 MVARS               net      1522     OH>East USA          0
MP             493 MVARS         West gross    3010     F601C  @Forbes    1930
NSP           1907 MVARS               net      2848     D602F  @Dorsey    1838
N. Dakota      412 MVARS         Total net     6530     L20D   @Letell     228
                             WAPA SD Hydro     1497     R50M   @Richer     137
                             Pleasant Valley      0     G82R   @Glenboro   -28
                             LGS/Trimont         99
                             SW MN Wind         830
                             Swing Bus         1084


Tfmrs          MVA/ Load     Ph Shifters  Deg/  MW      DC Lines          MW
------------- ---- -----     ------------ --- -----     --------------- ------
Wshell #1 7-7  106/  73%     Stinson       19/  110     CU (1,2)         1103
Wshell #2 7-7  106/  73%     Boundary Dam  18/  165     SQ BU (3,4)       504
Drayton#1 4-7   46/  32%     Whiteshell    77/  200     MH Bipole 1      1515
Drayton#2 4-7   58/  31%     Int Falls     97/  149     MH Bipole 2      1715
Dorsey #1 2-4  892/  74%     St. Lawrence  15/    0     MH (BP1+BP2)     3230
Dorsey #2 2-4 1002/  83%                                Miles City E>W    -150
Forbes    2-4  109/  16%                                RCDC (15)            0
                                                        Stegall (10)         0

Dorsey SC's       I/S  MVAR  Qmax/ Qmin    SVC's              MVAR  Qmax/ Qmin
----------------- --- -----  ---- -----    ----------------- -----  ---- -----
MIL 7-9G     17.0  2    519   600/ -330    Forbes        500    34   400/ -450
SCE 1-3G     18.2  3    424   480/ -240    Fargo        13.2    -1    20/ -135
SCA 4-6G     18.2  3    424   480/ -240    Watertown    20.0   -10   125/  -86
                        -----  ---- -----
       Total           1367  1560/ -810    Series Caps       Num In Serv
       Margin           193                ----------------- -----------
                                           Roseau        500   2 of 2
                                           Chisago       500   1 of 1
```

Caps/Reactors		MVAR	Caps/Reactors		MVAR	Caps/Reactors		MVAR
Balta (FS)	230	0	Arrowhead	230	160	Chisago T 9	34.5	51
Drayton	115	20	Blackberry	230	47	Chisago T 10	34.5	51
Drayton	13.8	0	Minntac	115	45	Forbes	230	70
Eau Claire(FS)	161	267	Riverton	230	47	Forbes	500	600
Kohlman Lake	115	240	Roseau Co.(FS)	230	0			0
Parkers Lk(FS)	115	80	Running (FS)	230	30	Fargo	115	27
Prairie (FS)	115	40	Running react	230	0	Watertown	20	0
Ramsey (FS)	230	0	Shannon	230	72	Watertown	230	151
Red Rock	115	240			0			0
Rugby	13.8	-25	Glenboro	230	0			0
Split Rock(FS)	115	160	Laverendrye	110	98			0
Sheyenne (FS)	115	80	Richer react	230	0			0
Wilton/Bemidji	115	20	St Vital	110	98			0

Bus Voltages		V,pu	Bus Voltages		V,pu	Bus Voltages		V,kV
Adams	345	1.011	Arrowhead	230	0.989	Whiteshell	110	118.9
Alexandria	115	0.996	Badoura	115	1.035	Kenora	220	247.3
Audubon	115	1.034	Blackberry	230	1.025	Dryden	220	251.9
Bemidji	115	1.025	Boise Cascade	13.8	1.051	Fort Frances	220	246.0
Byron	345	1.025	Boise Cascade	115	1.019	Mackenzie	220	256.5
Chisago Co.	345	0.994	ETCO	115	0.988	Lakehead	220	256.2
Chisago Co.	500	0.985	Forbes	230	0.995	Marathon	220	260.7
Drayton	230	1.033	Forbes	500	0.986	Wawa	220	258.2
Eau Claire	345	1.016	Hubbard	115	1.034	Mississagi	220	250.4
WEST FARIBAULT	115	0.999	Intl Falls	115	1.020	Fort Frances	118	119.6
LaPorte	115	1.023	Minntac	115	0.998	Lakehead	118	122.8
Maple River	230	1.031	Moranville	230	1.023	Birch	118	117.5
Marshall Tap	115	1.028	Riverton	230	1.012	Marathon	118	125.2
Owatonna	161	0.989	Running	230	1.021			0.0
Prairie	115	1.038	Shannon	230	1.019			0.0
Prairie	230	1.032			0.000			0.0
Ramsey	230	1.025	Groton	345	1.026			0.0
Roseau County	230	1.023	Watertown	230	1.030			0.0
Roseau County	500	1.067	Watertown	345	1.021			0.0
Sheyenne	230	1.033			0.000			0.0
Thief R Falls	115	1.033	Dorsey	230	1.045			0.0
Tioga	230	1.023	Dorsey	500	1.038			0.0
Wahpeton	230	1.016			0.000			0.0
Winger	115	1.046			0.000			0.0

Steady State Relay Margins (measured from inner blinder)

Relay Location	Manuf/Type	PSS Model	South	North	Em North
1) B10T-Tioga (South)	GE OST	SLLP	330%	N/A	N/A
2) -Tioga (North)	GE OST	SLLP	680%	N/A	N/A
3) -Tioga (Em North)	GE OST	SLLP		N/A	N/A
4) D602F-Dorsey	ATP ???	SLINOS	337%	N/A	N/A
5) -Forbes (Normal)	ATP ???	SLINOS	212%	N/A	N/A
6) -Forbes (Em Nrth)	APT S-PRO	SLINOS		N/A	N/A
8) F3M-Intl Falls	APT S-PRO	SLINOS	327%	N/A	N/A
9) G82R-Rugby	APT	SLINOS	N/A	1688%	
10) L20D-Drayton (Normal)	APT, ASEA	SLINOS	932%	N/A	N/A
11) -Drayton (Em Nrth)	ASEA RXZF2	SLINOS		N/A	N/A
12) R50M-Moranville (Norm)	APT, West	SLINOS	979%	N/A	N/A
13) -Moranville (Em N)	ASEA RXZF2	SLINOS		N/A	N/A

Appendix A.9: Summary for Case g02-so09aa.sav (With 125 MW GI-0503)

```
INITIATED AT LOAD FLOW ENTRY POINT ON FRI, MAR 14 2008  18:10

G02-SO09AA.SAV;SUMMER;OP LD;SYSTEM INTACT           :
ND=2450,MH=2175,MW=1249,OHMH=-196,OHMP=150,EWTW=97,BD=165


                    P O W E R   F L O W   S U M M A R Y
-----------------------------------------------------------------------------
               NDEX:      2450 MW         ECL-ARP:  532 MW
               MHEX:      2175 MW         PRI-BYN:  716 MW
               MWSI:      1249 MW         AHD-GPK:  554 MW
                                          NI-WUMS:  151 MW
               COOPER S:  1112 MW         WNE-WKS:  523 MW
               FTCAL S:    706 MW         GGS:     1510 MW
               GRIS-LNC:   699 MW         QC WEST:  -72 MW

           LOAD LEVELS AS PERCENT OF 2009 SUMMER PEAK:
           NORTH DAKOTA (ZONE 90,990) 2194.4 MW,  75.0% OF  2925.0 MW
           NSP             (AREA 600)  9068.2 MW,  94.1% OF  9632.0 MW
           MAN HYDRO       (AREA 667) 2126.0 MW,  71.7% OF  2964.0 MW

Load/Losses   MW  / MW       Generation        MW       Export            MW
----------- ------ -----     --------------- ------     --------------- ------
Manitoba      2126/ 267      MH total gross    4724     SPARE                0
Ont. total   22150/ 482         Wpg River       534     SPARE                0
     NW        915/  45         7 Sisters       165     SPARE                0
Sask.         1944/  85      OH total gross   21779     East Bias          347
MP            1944/ 223         northwest       816     SPC>WAPA (B10T)    165
NSP           9068/ 607      SPC total gross   2240     MH>SPC  (3-230)     21
N. Dakota     2194/ 300      MP total gross    2805     MH>SPC  (FALLS)    -66
Manitoba       450 MVARS     ND Cfd AC gross   3256     OH>MH  @Kenora    -196
Ont. total   13082 MVARS               net      3085     OH>MP  @Ft Fran    150
     NW        489 MVARS     NSP East gross    1609     OH E>W @Wawa        97
Sask.          453 MVARS               net      1522     OH>East USA          0
MP             493 MVARS         West gross    3010     F601C  @Forbes    1930
NSP           1907 MVARS               net      2848     D602F  @Dorsey    1842
N. Dakota      432 MVARS         Total net     6530     L20D   @Letell     231
                             WAPA SD Hydro     1497     R50M   @Richer     138
                             Pleasant Valley      0     G82R   @Glenboro   -35
                             LGS/Trimont         99
                             SW MN Wind         830
                             Swing Bus          979


Tfmrs          MVA/ Load     Ph Shifters  Deg/  MW      DC Lines          MW
------------- ---- -----     ------------ --- -----     --------------- ------
Wshell #1 7-7  106/  73%     Stinson       19/  110     CU (1,2)         1104
Wshell #2 7-7  106/  73%     Boundary Dam  21/  165     SQ BU (3,4)       504
Drayton#1 4-7   47/  33%     Whiteshell    77/  200     MH Bipole 1      1515
Drayton#2 4-7   60/  32%     Int Falls     97/  149     MH Bipole 2      1715
Dorsey #1 2-4  894/  74%     St. Lawrence  15/    0     MH (BP1+BP2)     3230
Dorsey #2 2-4 1005/  83%                                Miles City E>W    -150
Forbes    2-4  108/  16%                                RCDC (15)            0
                                                        Stegall (10)         0

Dorsey SC's       I/S  MVAR  Qmax/ Qmin    SVC's              MVAR  Qmax/ Qmin
----------------- --- -----  ---- -----    ----------------- -----  ---- -----
MIL 7-9G     17.0  2    525   600/ -330    Forbes        500    34   400/ -450
SCE 1-3G     18.2  3    428   480/ -240    Fargo        13.2    -8    20/ -135
SCA 4-6G     18.2  3    428   480/ -240    Watertown    20.0    -1   125/  -86
                        -----  ---- -----
       Total           1382  1560/ -810    Series Caps       Num In Serv
       Margin           178                ----------------- -----------
                                           Roseau        500   2 of 2
                                           Chisago       500   1 of 1
```

Caps/Reactors		MVAR
Balta (FS)	230	0
Drayton	115	20
Drayton	13.8	0
Eau Claire(FS)	161	267
Kohlman Lake	115	240
Parkers Lk(FS)	115	80
Prairie (FS)	115	40
Ramsey (FS)	230	0
Red Rock	115	240
Rugby	13.8	-25
Split Rock(FS)	115	160
Sheyenne (FS)	115	80
Wilton/Bemidji	115	20

Caps/Reactors		MVAR
Arrowhead	230	160
Blackberry	230	47
Minntac	115	45
Riverton	230	47
Roseau Co.(FS)	230	0
Running (FS)	230	30
Running react	230	0
Shannon	230	72
		0
Glenboro	230	0
Laverendrye	110	98
Richer react	230	0
St Vital	110	98

Caps/Reactors		MVAR
Chisago T 9	34.5	51
Chisago T 10	34.5	51
Forbes	230	70
Forbes	500	600
		0
Fargo	115	54
Watertown	20	0
Watertown	230	151
		0
		0
		0
		0
		0

Bus Voltages		V,pu
Adams	345	1.011
Alexandria	115	0.991
Audubon	115	1.027
Bemidji	115	1.018
Byron	345	1.025
Chisago Co.	345	0.994
Chisago Co.	500	0.986
Drayton	230	1.025
Eau Claire	345	1.016
WEST FARIBAULT	115	0.999
LaPorte	115	1.019
Maple River	230	1.026
Marshall Tap	115	1.028
Owatonna	161	0.989
Prairie	115	1.027
Prairie	230	1.022
Ramsey	230	1.013
Roseau County	230	1.023
Roseau County	500	1.067
Sheyenne	230	1.028
Thief R Falls	115	1.022
Tioga	230	1.019
Wahpeton	230	1.011
Winger	115	1.037

Bus Voltages		V,pu
Arrowhead	230	0.991
Badoura	115	1.032
Blackberry	230	1.025
Boise Cascade	13.8	1.051
Boise Cascade	115	1.019
ETCO	115	0.988
Forbes	230	0.995
Forbes	500	0.986
Hubbard	115	1.031
Intl Falls	115	1.020
Minntac	115	0.998
Moranville	230	1.023
Riverton	230	1.011
Running	230	1.021
Shannon	230	1.019
		0.000
Groton	345	1.023
Watertown	230	1.030
Watertown	345	1.020
		0.000
Dorsey	230	1.045
Dorsey	500	1.038
		0.000
		0.000

Bus Voltages		V,kV
Whiteshell	110	118.9
Kenora	220	247.3
Dryden	220	251.9
Fort Frances	220	246.0
Mackenzie	220	256.5
Lakehead	220	256.2
Marathon	220	260.7
Wawa	220	258.2
Mississagi	220	250.4
Fort Frances	118	119.5
Lakehead	118	122.8
Birch	118	117.5
Marathon	118	125.2
		0.0
		0.0
		0.0
		0.0
		0.0
		0.0
		0.0
		0.0
		0.0
		0.0
		0.0

Steady State Relay Margins (measured from inner blinder)

Relay Location	Manuf/Type	PSS Model	South	North	Em North
1) B10T-Tioga (South)	GE OST	SLLP	327%	N/A	N/A
2) -Tioga (North)	GE OST	SLLP	675%	N/A	N/A
3) -Tioga (Em North)	GE OST	SLLP		N/A	N/A
4) D602F-Dorsey	ATP ???	SLINOS	335%	N/A	N/A
5) -Forbes (Normal)	ATP ???	SLINOS	210%	N/A	N/A
6) -Forbes (Em Nrth)	APT S-PRO	SLINOS		N/A	N/A
8) F3M-Intl Falls	APT S-PRO	SLINOS	327%	N/A	N/A
9) G82R-Rugby	APT	SLINOS	N/A	1363%	
10) L20D-Drayton (Normal)	APT, ASEA	SLINOS	902%	N/A	N/A
11) -Drayton (Em Nrth)	ASEA RXZF2	SLINOS		N/A	N/A
12) R50M-Moranville (Norm)	APT, West	SLINOS	972%	N/A	N/A
13) -Moranville (Em N)	ASEA RXZF2	SLINOS		N/A	N/A

Appendix A.10: Simulation Summary Tables for Baseline Analysis

1	**Case No.**	1	2	3	4	5
2	**Case Name**	g00-so09aa-ac3	g00-so09aa-ad3	g00-so09aa-ag1	g00-so09aa-ag3	g00-so09aa-bl3
3	**Disturbance**	ac3	ad3	ag1	ag3	bl3
4	**Prior Outage**	None	None	None	None	None
5	**Date/Time**	MAR 15 2008 12:43	MAR 15 2008 12:45	MAR 15 2008 21:07	MAR 15 2008 12:46	MAR 15 2008 12:48
6	**Comments**					
7						
8	**Steady State Flows**					
9	NDEX / EAST BIAS	2449 / 352	2449 / 352	2449 / 352	2449 / 352	2449 / 352
10	MHEX / L20D	2175 / 228	2175 / 228	2175 / 228	2175 / 228	2175 / 228
11	ECL-ARP / PRI-BYN	533 / 717	533 / 717	533 / 717	533 / 717	533 / 717
12	MWSI / MNEX	1250	1250	1250	1250	1250
13	D602F / F601C	1838 / 1930	1838 / 1930	1838 / 1930	1838 / 1930	1838 / 1930
14	B10T / MH>SPC	165 / 21	165 / 21	165 / 21	165 / 21	165 / 21
15	OH E-W / OH>MH	97 / -197	97 / -197	97 / -197	97 / -197	97 / -197
16	R50M / OH>MP	137 / 150	137 / 150	137 / 150	137 / 150	137 / 150
17	G82R	-28	-28	-28	-28	-28
18	Dorsey bipole / CU bipole	3230 / 1104	3230 / 1104	3230 / 1104	3230 / 1104	3230 / 1104
19	Dorsey Reserve / Wtrtn SVC	193 / -10	193 / -10	193 / -10	193 / -10	193 / -10
20	Forbes SVC / MSC	34 / 600	34 / 600	34 / 600	34 / 600	34 / 600
21	Arrowhd-Wstn/ RCDC	554 / 0	554 / 0	554 / 0	554 / 0	554 / 0
22	**Steady State Vltgs**					
23	Dorsey 500/Dorsey 230	1.038 / 1.045	1.038 / 1.045	1.038 / 1.045	1.038 / 1.045	1.038 / 1.045
24	Roseau 500/Forbes 500	1.067 / 0.986	1.067 / 0.986	1.067 / 0.986	1.067 / 0.986	1.067 / 0.986
25	Chisago 500/EauClaire 345	0.985 / 1.016	0.985 / 1.016	0.985 / 1.016	0.985 / 1.016	0.985 / 1.016
26	Int Falls 115/Badoura 115	1.020 / 1.035	1.020 / 1.035	1.020 / 1.035	1.020 / 1.035	1.020 / 1.035
27	Drayton 230/Groton 345	1.033 / 1.026	1.033 / 1.026	1.033 / 1.026	1.033 / 1.026	1.033 / 1.026
28	**SS OS Relay Margins**					
29	D602F at Forbes/Dorsey	212% / 338%	212% / 338%	212% / 338%	212% / 338%	212% / 338%
30	82R at Rugby/L20D at Drayton	999% / 933%	999% / 933%	999% / 933%	999% / 933%	999% / 933%
31	R50M/F3M	980% / 327%	980% / 327%	980% / 327%	980% / 327%	980% / 327%
32	B10T	330%	330%	330%	330%	330%
33	**Min/MaxTransientVltg**					
34	Arrowhd 230	0.95 | 1.00	0.96 | 1.00	0.95 | 1.00	0.95 | 1.00	0.94 | 1.01
35	Boise 115	0.99 | 1.03	1.00 | 1.03	0.99 | 1.03	0.99 | 1.03	0.99 | 1.04
36	Dorsey 230	1.02 | 1.06	1.03 | 1.06	1.02 | 1.06	1.02 | 1.06	1.02 | 1.06
37	Forbes 230	0.97 | 1.01	0.98 | 1.01	0.97 | 1.01	0.97 | 1.01	0.96 | 1.02
38	Riverton 230	0.97 | 1.03	0.98 | 1.04	0.97 | 1.03	0.97 | 1.03	0.94 | 1.06
39	Coal Creek 230	0.95 | 1.12	0.96 | 1.11	0.96 | 1.12	0.96 | 1.12	1.00 | 1.11
40	Dickinson 345	0.93 | 1.03	0.93 | 1.04	0.93 | 1.04	0.93 | 1.03	0.95 | 1.03
41	Drayton 230	0.97 | 1.11	0.98 | 1.09	0.98 | 1.12	0.98 | 1.11	0.98 | 1.12
42	Groton 345	0.89 | 1.06	0.90 | 1.07	0.87 | 1.07	0.87 | 1.06	0.88 | 1.12
43	Tioga 230	0.97 | 1.05	0.98 | 1.05	0.97 | 1.06	0.97 | 1.05	0.98 | 1.04
44	Wahpeton 115	0.94 | 1.09	0.96 | 1.09	0.94 | 1.09	0.94 | 1.08	0.89 | 1.12
45	Watertown 345	0.96 | 1.05	0.95 | 1.05	0.94 | 1.04	0.94 | 1.04	0.91 | 1.09
46	**Dynamic Voltage Warnings**					
47		none	none	none	none	none
48						
49						
50						
51						
52						
53						
54	Worst Case Angle Damping					
55	Dorsey SUVP / UdHold					/ 0.158
56	Forbes DC Red (DCAR)	419%	395%	405%	404%	321%
57	K22W (max +dP @ t, d-ang)	11.5@(2.59165,1.1)	14.1@(2.50832,-0.6)	9.6@(2.61665,2.9)	10.8@(2.57499,2.4)	20.2@(2.81665,1.1)
58	K22W (max -dP @ t, d-ang)	21.3@(0.78333,5.5)	15.5@(0.68333,3.2)	23.2@(0.81666,5.7)	24.3@(0.78333,6.7)	19.8@(0.90000,3.9)
59	K22W (max d-ang @ t, dP)	8.4@(1.11666,-7.3)	6.0@(1.06666,-2.7)	9.1@(1.15833,-6.9)	10.1@(1.11666,-8.6)	7.5@(1.25833,-0.4)
60	**OS Rel Trip / Marg**					
61	MH - OH					
62	D602F at Forbes/Dorsey	156% / 244%	172% / 270%	155% / 241%	151% / 235%	157% / 246%
63	82R at Rugby/L20D at Drayton	999% / 716%	999% / 745%	999% / 713%	999% / 708%	999% / 622%
64	R50M / F3M	764% / 266%	821% / 276%	756% / 266%	741% / 265%	779% / 257%
65	B10T	186%	199%	181%	181%	142%
66	**FSCAPS (SS/Unav/Final)**					
67	Balta 230	(0 | 2 | 0)	(0 | 1 | 0)	(0 | 3 | 0)	(0 | 3 | 0)	(0 | 3 | 0)
68	Eau Cl 345 / Park Lk 115	(3 | 3 | 3) / (1 | 1 | 1)	(3 | 3 | 3) / (1 | 1 | 1)	(3 | 3 | 3) / (1 | 1 | 1)	(3 | 3 | 3) / (1 | 1 | 1)	(3 | 3 | 3) / (1 | 1 | 1)
69	Prairie 115 / Ramsey 230	(1 | 5 | 1) / (0 | 0 | 0)	(1 | 2 | 1) / (0 | 0 | 0)	(1 | 7 | 1) / (0 | 0 | 0)	(1 | 5 | 1) / (0 | 0 | 0)	(1 | 8 | 1) / (0 | 0 | 0)
70	Roseau 230 / Running 230	(0 | 0 | 0) / (1 | 1 | 1)	(0 | 0 | 0) / (1 | 1 | 1)	(0 | 0 | 0) / (1 | 1 | 1)	(0 | 0 | 0) / (1 | 1 | 1)	(0 | 0 | 0) / (1 | 1 | 1)
71	Shey 115 / Split Rock 115	(2 | 5 | 3) / (2 | 2 | 2)	(2 | 5 | 2) / (2 | 2 | 2)	(2 | 5 | 2) / (2 | 2 | 2)	(2 | 5 | 2) / (2 | 2 | 2)	(2 | 5 | 0) / (2 | 2 | 2)
72	**Damping Performance**	N/A	N/A	N/A	N/A	N/A

Appendix A.10: Simulation Summary Tables for Baseline Analysis

1	**Case No.**	6	7	8	9	10
2	**Case Name**	g00-so09aa-eb3	g00-so09aa-ec3	g00-so09aa-ef3	g00-so09aa-ei2	g00-so09aa-el3
3	**Disturbance**	eb3	ec3	ef3	ei2	el3
4	**Prior Outage**	None	None	None	None	None
5	**Date/Time**	MAR 15 2008 12:51	MAR 15 2008 12:52	MAR 15 2008 12:54	MAR 15 2008 12:59	MAR 15 2008 12:57
6	**Comments**					
7						
8	**Steady State Flows**					
9	NDEX / EAST BIAS	2449 / 352	2449 / 352	2449 / 352	2449 / 352	2449 / 352
10	MHEX / L20D	2175 / 228	2175 / 228	2175 / 228	2175 / 228	2175 / 228
11	ECL-ARP / PRI-BYN	533 / 717	533 / 717	533 / 717	533 / 717	533 / 717
12	MWSI / MNEX	1250	1250	1250	1250	1250
13	D602F / F601C	1838 / 1930	1838 / 1930	1838 / 1930	1838 / 1930	1838 / 1930
14	B10T / MH>SPC	165 / 21	165 / 21	165 / 21	165 / 21	165 / 21
15	OH E-W / OH>MH	97 / -197	97 / -197	97 / -197	97 / -197	97 / -197
16	R50M / OH>MP	137 / 150	137 / 150	137 / 150	137 / 150	137 / 150
17	G82R	-28	-28	-28	-28	-28
18	Dorsey bipole / CU bipole	3230 / 1104	3230 / 1104	3230 / 1104	3230 / 1104	3230 / 1104
19	Dorsey Reserve / Wtrtn SVC	193 / -10	193 / -10	193 / -10	193 / -10	193 / -10
20	Forbes SVC / MSC	34 / 600	34 / 600	34 / 600	34 / 600	34 / 600
21	Arrowhd-Wstn/ RCDC	554 / 0	554 / 0	554 / 0	554 / 0	554 / 0
22	**Steady State Vltgs**					
23	Dorsey 500/Dorsey 230	1.038 / 1.045	1.038 / 1.045	1.038 / 1.045	1.038 / 1.045	1.038 / 1.045
24	Roseau 500/Forbes 500	1.067 / 0.986	1.067 / 0.986	1.067 / 0.986	1.067 / 0.986	1.067 / 0.986
25	Chisago 500/EauClaire 345	0.985 / 1.016	0.985 / 1.016	0.985 / 1.016	0.985 / 1.016	0.985 / 1.016
26	Int Falls 115/Badoura 115	1.020 / 1.035	1.020 / 1.035	1.020 / 1.035	1.020 / 1.035	1.020 / 1.035
27	Drayton 230/Groton 345	1.033 / 1.026	1.033 / 1.026	1.033 / 1.026	1.033 / 1.026	1.033 / 1.026
28	**SS OS Relay Margins**					
29	D602F at Forbes/Dorsey	212% / 338%	212% / 338%	212% / 338%	212% / 338%	212% / 338%
30	82R at Rugby/L20D at Drayton	999% / 933%	999% / 933%	999% / 933%	999% / 933%	999% / 933%
31	R50M/F3M	980% / 327%	980% / 327%	980% / 327%	980% / 327%	980% / 327%
32	B10T	330%	330%	330%	330%	330%
33	**Min/MaxTransientVltg**					
34	Arrowhd 230	0.96 | 1.01	0.93 | 1.00	0.93 | 1.01	0.89 | 1.03	0.94 | 1.00
35	Boise 115	1.00 | 1.02	0.99 | 1.04	0.98 | 1.06	0.97 | 1.05	0.99 | 1.04
36	Dorsey 230	1.03 | 1.05	1.02 | 1.06	1.01 | 1.07	1.02 | 1.06	1.03 | 1.06
37	Forbes 230	0.99 | 1.01	0.97 | 1.01	0.96 | 1.02	0.90 | 1.01	0.97 | 1.01
38	Riverton 230	1.00 | 1.03	0.94 | 1.04	0.93 | 1.06	0.88 | 1.04	0.95 | 1.04
39	Coal Creek 230	0.96 | 1.11	0.90 | 1.14	1.00 | 1.10	1.00 | 1.12	0.93 | 1.14
40	Dickinson 345	0.94 | 1.02	0.92 | 1.04	0.95 | 1.03	0.96 | 1.05	0.92 | 1.04
41	Drayton 230	0.98 | 1.07	0.97 | 1.15	0.95 | 1.15	0.94 | 1.12	0.99 | 1.13
42	Groton 345	0.95 | 1.03	0.90 | 1.10	0.82 | 1.12	0.85 | 1.10	0.90 | 1.09
43	Tioga 230	1.00 | 1.04	0.98 | 1.05	0.95 | 1.05	0.99 | 1.05	0.99 | 1.05
44	Wahpeton 115	0.98 | 1.05	0.90 | 1.10	0.86 | 1.13	0.85 | 1.11	0.92 | 1.10
45	Watertown 345	0.98 | 1.03	0.93 | 1.07	0.87 | 1.10	0.87 | 1.08	0.93 | 1.06
46	**Dynamic Voltage Warnings**					
47		none				none
48						
49						
50						
51						
52						
53						
54	Worst Case Angle Damping					
55	Dorsey SUVP / UdHold		/ 0.175	/ 0.158		/ 0.175
56	Forbes DC Red (DCAR)	416%	385%	269%	507%	390%
57	K22W (max +dP @ t, d-ang)	9.3@(2.55832,-2.0)	19.4@(2.64999,-1.1)	33.3@(2.98331,0.2)	79.6@(2.95832,-32.6)	17.8@(2.60832,-1.0)
58	K22W (max -dP @ t, d-ang)	11.0@(0.78333,2.1)	26.4@(0.72500,4.0)	27.3@(0.92500,3.8)	16.3@(0.68333,3.2)	23.0@(0.67500,3.0)
59	K22W (max d-ang @ t, dP)	3.8@(1.15000,-4.4)	9.1@(1.16666,-5.7)	11.7@(1.35833,-1.1)	-37.5@(2.42499,57.4)	7.7@(1.15000,-4.5)
60	**OS Rel Trip / Marg**					
61	MH - OH					
62	D602F at Forbes/Dorsey	179% / 281%	154% / 239%	144% / 223%	108% / 166%	159% / 248%
63	82R at Rugby/L20D at Drayton	999% / 675%	999% / 660%	999% / 553%	999% / 537%	999% / 708%
64	R50M / F3M	843% / 283%	761% / 260%	741% / 243%	679% / 192%	787% / 264%
65	B10T	289%	147%	128%	98%	172%
66	**FSCAPS (SS/Unav/Final)**					
67	Balta 230	(0 | 2 | 0)	(0 | 3 | 0)	(0 | 3 | 0)	(0 | 1 | 0)	(0 | 3 | 0)
68	Eau Cl 345 / Park Lk 115	(3 | 3 | 3) / (1 | 1 | 1)	(3 | 3 | 3) / (1 | 1 | 1)	(3 | 3 | 3) / (1 | 1 | 1)	(3 | 3 | 3) / (1 | 1 | 1)	(3 | 3 | 3) / (1 | 1 | 1)
69	Prairie 115 / Ramsey 230	(1 | 3 | 3) / (0 | 0 | 0)	(1 | 6 | 1) / (0 | 0 | 0)	(1 |10 | 1) / (0 | 0 | 0)	(1 | 6 | 1) / (0 | 0 | 0)	(1 | 4 | 1) / (0 | 0 | 0)
70	Roseau 230 / Running 230	(0 | 0 | 0) / (1 | 1 | 1)	(0 | 0 | 0) / (1 | 1 | 1)	(0 | 1 | 0) / (1 | 2 | 1)	(0 | 1 | 0) / (1 | 2 | 1)	(0 | 0 | 0) / (1 | 1 | 1)
71	Shey 115 / Split Rock 115	(2 | 3 | 3) / (2 | 2 | 2)	(2 | 5 | 1) / (2 | 2 | 2)	(2 | 5 | 0) / (2 | 2 | 2)	(2 | 5 | 2) / (2 | 2 | 2)	(2 | 5 | 1) / (2 | 2 | 2)
72	**Damping Performance**	N/A	N/A	N/A	N/A	N/A

Appendix A.10: Simulation Summary Tables for Baseline Analysis

1	**Case No.**	11	12	13	14	15
2	**Case Name**	g00-so09aa-eq1	g00-so09aa-ev0	g00-so09aa-fd1	g00-so09aa-fd3	g00-so09aa-fd4
3	**Disturbance**	eq1	ev0	fd1	fd3	fd4
4	**Prior Outage**	None	None	None	None	None
5	**Date/Time**	MAR 15 2008 21:08	MAR 15 2008 13:01	MAR 15 2008 21:10	MAR 15 2008 13:02	MAR 15 2008 21:14
6	**Comments**					
7						
8	**Steady State Flows**					
9	NDEX / EAST BIAS	2449 / 352	2449 / 352	2449 / 352	2449 / 352	2449 / 352
10	MHEX / L20D	2175 / 228	2175 / 228	2175 / 228	2175 / 228	2175 / 228
11	ECL-ARP / PRI-BYN	533 / 717	533 / 717	533 / 717	533 / 717	533 / 717
12	MWSI / MNEX	1250	1250	1250	1250	1250
13	D602F / F601C	1838 / 1930	1838 / 1930	1838 / 1930	1838 / 1930	1838 / 1930
14	B10T / MH>SPC	165 / 21	165 / 21	165 / 21	165 / 21	165 / 21
15	OH E-W / OH>MH	97 / -197	97 / -197	97 / -197	97 / -197	97 / -197
16	R50M / OH>MP	137 / 150	137 / 150	137 / 150	137 / 150	137 / 150
17	G82R	-28	-28	-28	-28	-28
18	Dorsey bipole / CU bipole	3230 / 1104	3230 / 1104	3230 / 1104	3230 / 1104	3230 / 1104
19	Dorsey Reserve / Wtrtn SVC	193 / -10	193 / -10	193 / -10	193 / -10	193 / -10
20	Forbes SVC / MSC	34 / 600	34 / 600	34 / 600	34 / 600	34 / 600
21	Arrowhd-Wstn/ RCDC	554 / 0	554 / 0	554 / 0	554 / 0	554 / 0
22	**Steady State Vltgs**					
23	Dorsey 500/Dorsey 230	1.038 / 1.045	1.038 / 1.045	1.038 / 1.045	1.038 / 1.045	1.038 / 1.045
24	Roseau 500/Forbes 500	1.067 / 0.986	1.067 / 0.986	1.067 / 0.986	1.067 / 0.986	1.067 / 0.986
25	Chisago 500/EauClaire 345	0.985 / 1.016	0.985 / 1.016	0.985 / 1.016	0.985 / 1.016	0.985 / 1.016
26	Int Falls 115/Badoura 115	1.020 / 1.035	1.020 / 1.035	1.020 / 1.035	1.020 / 1.035	1.020 / 1.035
27	Drayton 230/Groton 345	1.033 / 1.026	1.033 / 1.026	1.033 / 1.026	1.033 / 1.026	1.033 / 1.026
28	**SS OS Relay Margins**					
29	D602F at Forbes/Dorsey	212% / 338%	212% / 338%	212% / 338%	212% / 338%	212% / 338%
30	82R at Rugby/L20D at Drayton	999% / 933%	999% / 933%	999% / 933%	999% / 933%	999% / 933%
31	R50M/F3M	980% / 327%	980% / 327%	980% / 327%	980% / 327%	980% / 327%
32	B10T	330%	330%	330%	330%	330%
33	**Min/MaxTransientVltg**					
34	Arrowhd 230	0.93 | 1.02	0.99 | 1.02	0.98 | 1.02	0.92 | 1.00	0.93 | 1.01
35	Boise 115	0.99 | 1.03	0.99 | 1.03	0.98 | 1.05	0.98 | 1.05	0.99 | 1.04
36	Dorsey 230	1.02 | 1.06	1.03 | 1.05	1.02 | 1.06	1.01 | 1.06	1.02 | 1.06
37	Forbes 230	0.95 | 1.01	0.98 | 1.01	0.97 | 1.02	0.96 | 1.02	0.96 | 1.02
38	Riverton 230	0.92 | 1.05	0.96 | 1.03	0.95 | 1.05	0.93 | 1.06	0.95 | 1.06
39	Coal Creek 230	0.95 | 1.17	0.95 | 1.12	0.97 | 1.15	0.95 | 1.16	0.96 | 1.15
40	Dickinson 345	0.98 | 1.08	0.93 | 1.04	0.93 | 1.05	0.92 | 1.06	0.93 | 1.06
41	Drayton 230	0.99 | 1.11	1.00 | 1.10	0.97 | 1.13	0.97 | 1.13	0.98 | 1.13
42	Groton 345	0.88 | 1.10	0.90 | 1.05	0.90 | 1.09	0.85 | 1.12	0.90 | 1.11
43	Tioga 230	0.99 | 1.05	1.00 | 1.05	0.98 | 1.06	0.97 | 1.05	0.98 | 1.05
44	Wahpeton 115	0.90 | 1.10	0.92 | 1.07	0.88 | 1.11	0.85 | 1.13	0.88 | 1.13
45	Watertown 345	0.91 | 1.08	0.93 | 1.04	0.93 | 1.07	0.90 | 1.09	0.93 | 1.09
46	**Dynamic Voltage Warnings**					
47		none	none		63369 [JAMESTN3] 0.67	
48					63200 [JAMSTN2Y] 0.68	
49					63199 [JAMSTN1Y] 0.68	
50					63270 [LADISH 7] 0.69	
51					63271 [AVIKO 7] 0.69	
52					63272 [JAMESPK7] 0.69	
53					273 [JAMETAP7] 0.69 +m	
54	Worst Case Angle Damping					
55	Dorsey SUVP / UdHold		/ 0.166		/ 0.166	
56	Forbes DC Red (DCAR)	507%	436%	331%	298%	329%
57	K22W (max +dP @ t, d-ang)	49.3@(2.71665,-20.8)	12.2@(2.69165,-2.3)	17.0@(2.79998,-0.6)	30.1@(2.75832,-2.1)	22.2@(2.73332,-0.9)
58	K22W (max -dP @ t, d-ang)	10.0@(0.51666,1.8)	20.9@(0.71666,2.3)	24.8@(0.91666,3.7)	28.4@(0.95000,8.3)	23.9@(0.87500,4.0)
59	K22W (max d-ang @ t, dP)	-24.0@(2.21666,36.8)	6.8@(1.21666,-7.5)	8.1@(1.30000,-2.9)	12.2@(1.24166,-8.6)	8.7@(1.25000,-0.8)
60	**OS Rel Trip / Marg**					
61	MH - OH					
62	D602F at Forbes/Dorsey	146% / 228%	148% / 229%	143% / 221%	143% / 222%	156% / 243%
63	82R at Rugby/L20D at Drayton	999% / 597%	999% / 796%	999% / 704%	999% / 573%	999% / 633%
64	R50M / F3M	774% / 225%	733% / 252%	720% / 244%	733% / 252%	779% / 258%
65	B10T	119%	242%	171%	119%	142%
66	**FSCAPS (SS/Unav/Final)**					
67	Balta 230	(0 | 2 | 0)	(0 | 2 | 0)	(0 | 1 | 0)	(0 | 3 | 0)	(0 | 1 | 0)
68	Eau Cl 345 / Park Lk 115	(3 | 3 | 3) / (1 | 1 | 1)	(3 | 3 | 3) / (1 | 1 | 1)	(3 | 3 | 3) / (1 | 1 | 1)	(3 | 3 | 3) / (1 | 1 | 1)	(3 | 3 | 3) / (1 | 1 | 1)
69	Prairie 115 / Ramsey 230	(1 | 5 | 1) / (0 | 0 | 0)	(1 | 3 | 1) / (0 | 0 | 0)	(1 | 8 | 1) / (0 | 0 | 0)	(1 | 7 | 1) / (0 | 0 | 0)	(1 | 7 | 1) / (0 | 0 | 0)
70	Roseau 230 / Running 230	(0 | 0 | 0) / (1 | 1 | 1)	(0 | 0 | 0) / (1 | 1 | 1)	(0 | 0 | 0) / (1 | 2 | 2)	(0 | 1 | 0) / (1 | 2 | 1)	(0 | 0 | 0) / (1 | 1 | 1)
71	Shey 115 / Split Rock 115	(2 | 5 | 2) / (2 | 2 | 2)	(2 | 5 | 4) / (2 | 2 | 2)	(2 | 5 | 1) / (2 | 2 | 2)	(2 | 5 | 0) / (2 | 2 | 2)	(2 | 5 | 0) / (2 | 2 | 2)
72	**Damping Performance**	N/A	N/A	N/A	N/A	N/A

Table A

Appendix A.10: Simulation Summary Tables for Baseline Analysis

1	**Case No.**	16	17	18	19	20
2	**Case Name**	g00-so09aa-fd9	g00-so09aa-fdk	g00-so09aa-fdl	g00-so09aa-nmz	g00-so09aa-pcs
3	**Disturbance**	fd9	fdk	fdl	nmz	pcs
4	**Prior Outage**	None	None	None	None	None
5	**Date/Time**	MAR 15 2008 21:04	MAR 15 2008 21:12	MAR 15 2008 21:16	MAR 15 2008 21:41	MAR 15 2008 21:20
6	**Comments**					
7						
8	**Steady State Flows**					
9	NDEX / EAST BIAS	2449 / 352	2449 / 352	2449 / 352	2449 / 352	2449 / 352
10	MHEX / L20D	2175 / 228	2175 / 228	2175 / 228	2175 / 228	2175 / 228
11	ECL-ARP / PRI-BYN	533 / 717	533 / 717	533 / 717	533 / 717	533 / 717
12	MWSI / MNEX	1250	1250	1250	1250	1250
13	D602F / F601C	1838 / 1930	1838 / 1930	1838 / 1930	1838 / 1930	1838 / 1930
14	B10T / MH>SPC	165 / 21	165 / 21	165 / 21	165 / 21	165 / 21
15	OH E-W / OH>MH	97 / -197	97 / -197	97 / -197	97 / -197	97 / -197
16	R50M / OH>MP	137 / 150	137 / 150	137 / 150	137 / 150	137 / 150
17	G82R	-28	-28	-28	-28	-28
18	Dorsey bipole / CU bipole	3230 / 1104	3230 / 1104	3230 / 1104	3230 / 1104	3230 / 1104
19	Dorsey Reserve / Wtrtn SVC	193 / -10	193 / -10	193 / -10	193 / -10	193 / -10
20	Forbes SVC / MSC	34 / 600	34 / 600	34 / 600	34 / 600	34 / 600
21	Arrowhd-Wstn/ RCDC	554 / 0	554 / 0	554 / 0	554 / 0	554 / 0
22	**Steady State Vltgs**					
23	Dorsey 500/Dorsey 230	1.038 / 1.045	1.038 / 1.045	1.038 / 1.045	1.038 / 1.045	1.038 / 1.045
24	Roseau 500/Forbes 500	1.067 / 0.986	1.067 / 0.986	1.067 / 0.986	1.067 / 0.986	1.067 / 0.986
25	Chisago 500/EauClaire 345	0.985 / 1.016	0.985 / 1.016	0.985 / 1.016	0.985 / 1.016	0.985 / 1.016
26	Int Falls 115/Badoura 115	1.020 / 1.035	1.020 / 1.035	1.020 / 1.035	1.020 / 1.035	1.020 / 1.035
27	Drayton 230/Groton 345	1.033 / 1.026	1.033 / 1.026	1.033 / 1.026	1.033 / 1.026	1.033 / 1.026
28	**SS OS Relay Margins**					
29	D602F at Forbes/Dorsey	212% / 338%	212% / 338%	212% / 338%	212% / 338%	212% / 338%
30	82R at Rugby/L20D at Drayton	999% / 933%	999% / 933%	999% / 933%	999% / 933%	999% / 933%
31	R50M/F3M	980% / 327%	980% / 327%	980% / 327%	980% / 327%	980% / 327%
32	B10T	330%	330%	330%	330%	330%
33	**Min/MaxTransientVltg**					
34	Arrowhd 230	0.93 | 1.00	0.99 | 1.04	0.94 | 1.02	(0.59)0.77 | 1.03	0.85 | 0.97
35	Boise 115	0.99 | 1.03	1.00 | 1.03	1.00 | 1.03	0.96 | 1.05	0.99 | 1.04
36	Dorsey 230	1.02 | 1.06	1.03 | 1.06	1.03 | 1.06	1.05 | 1.22	1.02 | 1.09
37	Forbes 230	0.97 | 1.01	0.98 | 1.01	0.98 | 1.01	0.94 | 1.02	0.97 | 1.02
38	Riverton 230	0.95 | 1.05	0.99 | 1.04	0.98 | 1.04	0.79 | 1.03	0.99 | 1.02
39	Coal Creek 230	0.96 | 1.14	0.98 | 1.11	0.97 | 1.11	0.91 | 1.12	0.96 | 1.07
40	Dickinson 345	0.93 | 1.05	0.95 | 1.04	0.94 | 1.04	0.87 | 1.07	0.94 | 1.03
41	Drayton 230	0.99 | 1.10	1.01 | 1.08	1.00 | 1.11	0.99 | 1.09	1.00 | 1.05
42	Groton 345	0.91 | 1.09	0.97 | 1.09	0.97 | 1.11	0.84 | 1.05	0.97 | 1.04
43	Tioga 230	0.99 | 1.04	1.00 | 1.04	0.99 | 1.04	0.98 | 1.05	0.98 | 1.03
44	Wahpeton 115	0.90 | 1.11	0.97 | 1.09	0.96 | 1.11	0.84 | 1.06	1.00 | 1.05
45	Watertown 345	0.94 | 1.07	0.99 | 1.07	0.99 | 1.08	0.83 | 1.04	0.99 | 1.03
46	**Dynamic Voltage Warnings**					
47		none	none	none	61615 [ARROWHD4] 0.79	none
48					61614 [98L TAP4] 0.79	
49					61616 [HILLTOP4] 0.79	
50					61686 [15TH AV7] 0.80	
51					61674 [HANESRD7] 0.81	
52					61673 [ARROWHD7] 0.81	
53					687 [MIDWAY 7] 0.81 +m	
54	Worst Case Angle Damping					SHERC3 / 65.92%
55	Dorsey SUVP / UdHold	/ 0.166			/ 0.133	
56	Forbes DC Red (DCAR)	377%	477%	490%	507%	171%
57	K22W (max +dP @ t, d-ang)	19.8@(2.65832,-1.4)	43.3@(2.49999,-17.2)	46.7@(2.49999,-16.4)	148.3@(2.74165,-61.1)	6.3@(3.56664,2.1)
58	K22W (max -dP @ t, d-ang)	19.0@(0.89166,5.2)	2.3@(0.30833,-0.2)	2.4@(0.58333,-1.0)	94.2@(0.23333,7.2)	56.1@(1.75000,21.9)
59	K22W (max d-ang @ t, dP)	7.7@(1.17500,-3.8)	-19.1@(1.99166,31.2)	-19.0@(1.96666,31.3)	-61.2@(2.69999,147.5)	29.9@(1.18333,-45.1)
60	**OS Rel Trip / Marg**					
61	MH - OH					
62	D602F at Forbes/Dorsey	161% / 252%	180% / 284%	180% / 282%	0.18333 sec / 0.18333 sec	160% / 248%
63	82R at Rugby/L20D at Drayton	999% / 670%	999% / 659%	999% / 585%	999% / 579%	999% / 611%
64	R50M / F3M	795% / 265%	823% / 239%	819% / 243%	551% / 164%	665% / 327%
65	B10T	165%	153%	126%	119%	152%
66	**FSCAPS (SS/Unav/Final)**					
67	Balta 230	(0 | 2 | 0)	(0 | 0 | 0)	(0 | 0 | 0)	(0 | 2 | 0)	(0 | 0 | 0)
68	Eau Cl 345 / Park Lk 115	(3 | 3 | 3) / (1 | 1 | 1)	(3 | 3 | 3) / (1 | 1 | 1)	(3 | 3 | 3) / (1 | 1 | 1)	(3 | 3 | 1) / (1 | 1 | 1)	(3 | 4 | 2) / (1 | 3 | 3)
69	Prairie 115 / Ramsey 230	(1 | 5 | 2) / (0 | 0 | 0)	(1 | 3 | 1) / (0 | 0 | 0)	(1 | 5 | 1) / (0 | 0 | 0)	(1 | 4 | 1) / (0 | 0 | 0)	(1 | 1 | 1) / (0 | 0 | 0)
70	Roseau 230 / Running 230	(0 | 0 | 0) / (1 | 1 | 1)	(0 | 0 | 0) / (1 | 1 | 1)	(0 | 0 | 0) / (1 | 1 | 1)	(0 | 0 | 0) / (1 | 3 | 1)	(0 | 0 | 0) / (1 | 1 | 1)
71	Shey 115 / Split Rock 115	(2 | 5 | 1) / (2 | 2 | 2)	(2 | 5 | 1) / (2 | 2 | 2)	(2 | 5 | 0) / (2 | 2 | 2)	(2 | 5 | 4) / (2 | 2 | 2)	(2 | 2 | 2) / (2 | 2 | 2)
72	**Damping Performance**	N/A	N/A	N/A	N/A	N/A

Appendix A.10: Simulation Summary Tables for Baseline Analysis

1	**Case No.**	21	22	23	24	25
2	**Case Name**	g00-so09aa-pct	g00-so09aa-pys	g00-so09aa-pyt	g00-so09aa-ya3	g00-so09aa-yas
3	**Disturbance**	pct	pys	pyt	ya3	yas
4	**Prior Outage**	None	None	None	None	None
5	**Date/Time**	MAR 15 2008 21:25	MAR 15 2008 21:30	MAR 15 2008 21:36	MAR 15 2008 13:07	MAR 15 2008 21:18
6	**Comments**					
7						
8	**Steady State Flows**					
9	NDEX / EAST BIAS	2449 / 352	2449 / 352	2449 / 352	2449 / 352	2449 / 352
10	MHEX / L20D	2175 / 228	2175 / 228	2175 / 228	2175 / 228	2175 / 228
11	ECL-ARP / PRI-BYN	533 / 717	533 / 717	533 / 717	533 / 717	533 / 717
12	MWSI / MNEX	1250	1250	1250	1250	1250
13	D602F / F601C	1838 / 1930	1838 / 1930	1838 / 1930	1838 / 1930	1838 / 1930
14	B10T / MH>SPC	165 / 21	165 / 21	165 / 21	165 / 21	165 / 21
15	OH E-W / OH>MH	97 / -197	97 / -197	97 / -197	97 / -197	97 / -197
16	R50M / OH>MP	137 / 150	137 / 150	137 / 150	137 / 150	137 / 150
17	G82R	-28	-28	-28	-28	-28
18	Dorsey bipole / CU bipole	3230 / 1104	3230 / 1104	3230 / 1104	3230 / 1104	3230 / 1104
19	Dorsey Reserve / Wtrtn SVC	193 / -10	193 / -10	193 / -10	193 / -10	193 / -10
20	Forbes SVC / MSC	34 / 600	34 / 600	34 / 600	34 / 600	34 / 600
21	Arrowhd-Wstn/ RCDC	554 / 0	554 / 0	554 / 0	554 / 0	554 / 0
22	**Steady State Vltgs**					
23	Dorsey 500/Dorsey 230	1.038 / 1.045	1.038 / 1.045	1.038 / 1.045	1.038 / 1.045	1.038 / 1.045
24	Roseau 500/Forbes 500	1.067 / 0.986	1.067 / 0.986	1.067 / 0.986	1.067 / 0.986	1.067 / 0.986
25	Chisago 500/EauClaire 345	0.985 / 1.016	0.985 / 1.016	0.985 / 1.016	0.985 / 1.016	0.985 / 1.016
26	Int Falls 115/Badoura 115	1.020 / 1.035	1.020 / 1.035	1.020 / 1.035	1.020 / 1.035	1.020 / 1.035
27	Drayton 230/Groton 345	1.033 / 1.026	1.033 / 1.026	1.033 / 1.026	1.033 / 1.026	1.033 / 1.026
28	**SS OS Relay Margins**					
29	D602F at Forbes/Dorsey	212% / 338%	212% / 338%	212% / 338%	212% / 338%	212% / 338%
30	82R at Rugby/L20D at Drayton	999% / 933%	999% / 933%	999% / 933%	999% / 933%	999% / 933%
31	R50M/F3M	980% / 327%	980% / 327%	980% / 327%	980% / 327%	980% / 327%
32	B10T	330%	330%	330%	330%	330%
33	**Min/MaxTransientVltg**					
34	Arrowhd 230	0.93 | 0.96	0.96 | 0.99	0.97 | 0.99	0.97 | 0.99	0.89 | 0.96
35	Boise 115	1.02 | 1.03	1.00 | 1.05	1.02 | 1.03	1.02 | 1.04	1.01 | 1.04
36	Dorsey 230	1.04 | 1.05	1.03 | 1.07	1.04 | 1.05	1.04 | 1.06	1.03 | 1.07
37	Forbes 230	0.99 | 1.00	0.98 | 1.04	0.99 | 1.01	0.98 | 1.00	0.97 | 1.00
38	Riverton 230	1.01 | 1.02	1.00 | 1.03	1.01 | 1.03	1.00 | 1.01	0.97 | 1.02
39	Coal Creek 230	1.02 | 1.05	0.98 | 1.08	1.02 | 1.05	1.02 | 1.05	0.98 | 1.06
40	Dickinson 345	0.98 | 1.01	0.97 | 1.03	0.98 | 1.01	0.96 | 0.99	0.93 | 1.00
41	Drayton 230	1.03 | 1.04	1.01 | 1.05	1.03 | 1.04	1.02 | 1.05	1.02 | 1.05
42	Groton 345	1.02 | 1.03	0.99 | 1.03	1.02 | 1.03	1.01 | 1.03	1.01 | 1.03
43	Tioga 230	1.02 | 1.03	0.99 | 1.03	1.02 | 1.03	1.01 | 1.03	1.01 | 1.03
44	Wahpeton 115	1.03 | 1.05	1.01 | 1.05	1.04 | 1.05	1.03 | 1.05	1.02 | 1.05
45	Watertown 345	1.01 | 1.03	1.00 | 1.03	1.01 | 1.02	1.01 | 1.02	1.01 | 1.02
46	**Dynamic Voltage Warnings**					
47		none	none	none	none	none
48						
49						
50						
51						
52						
53						
54	Worst Case Angle Damping	SHERC3 / 53.58%	SHERC3 / 72.22%	SHERC3 / 58.76%		
55	Dorsey SUVP / UdHold					
56	Forbes DC Red (DCAR)	302%	142%	339%	394%	430%
57	K22W (max +dP @ t, d-ang)	0.0@(0.03333,0.0)	7.6@(3.49997,-0.3)	0.0@(0.03333,0.0)	3.1@(0.11667,0.6)	2.2@(0.11667,0.4)
58	K22W (max -dP @ t, d-ang)	27.8@(2.45832,12.6)	36.3@(1.71666,12.4)	19.3@(1.87500,8.7)	27.1@(1.70000,12.7)	24.4@(1.58333,10.9)
59	K22W (max d-ang @ t, dP)	12.8@(2.21666,-27.4)	21.2@(1.14166,-26.0)	9.2@(2.19166,-18.6)	13.1@(2.00000,-23.3)	12.1@(1.10833,-16.3)
60	**OS Rel Trip / Marg**					
61	MH - OH					
62	D602F at Forbes/Dorsey	212% / 338%	165% / 255%	212% / 338%	205% / 328%	186% / 294%
63	82R at Rugby/L20D at Drayton	999% / 858%	999% / 676%	999% / 861%	999% / 805%	999% / 802%
64	R50M / F3M	908% / 327%	734% / 314%	950% / 327%	980% / 327%	892% / 327%
65	B10T	292%	177%	289%	265%	258%
66	**FSCAPS (SS/Unav/Final)**					
67	Balta 230	(0 | 0 | 0)	(0 | 0 | 0)	(0 | 0 | 0)	(0 | 0 | 0)	(0 | 0 | 0)
68	Eau Cl 345 / Park Lk 115	(3 | 3 | 2) / (1 | 1 | 1)	(3 | 4 | 4) / (1 | 3 | 3)	(3 | 3 | 3) / (1 | 1 | 1)	(3 | 4 | 4) / (1 | 1 | 1)	(3 | 4 | 4) / (1 | 1 | 1)
69	Prairie 115 / Ramsey 230	(1 | 1 | 1) / (0 | 0 | 0)	(1 | 1 | 1) / (0 | 0 | 0)	(1 | 1 | 1) / (0 | 0 | 0)	(1 | 1 | 1) / (0 | 0 | 0)	(1 | 1 | 1) / (0 | 0 | 0)
70	Roseau 230 / Running 230	(0 | 0 | 0) / (1 | 1 | 1)	(0 | 0 | 0) / (1 | 1 | 1)	(0 | 0 | 0) / (1 | 1 | 1)	(0 | 0 | 0) / (1 | 1 | 1)	(0 | 0 | 0) / (1 | 1 | 1)
71	Shey 115 / Split Rock 115	(2 | 2 | 2) / (2 | 2 | 2)	(2 | 2 | 2) / (2 | 2 | 2)	(2 | 2 | 2) / (2 | 2 | 2)	(2 | 2 | 2) / (2 | 2 | 2)	(2 | 2 | 2) / (2 | 2 | 2)
72	**Damping Performance**	N/A	N/A	N/A	N/A	N/A

Table A

Appendix A.10: Simulation Summary Tables for Baseline Analysis

1	**Case No.**	26
2	**Case Name**	g00-so09aa-zss
3	**Disturbance**	zss
4	**Prior Outage**	None
5	**Date/Time**	MAR 17 2008 9:25
6	**Comments**	
7		
8	**Steady State Flows**	
9	NDEX / EAST BIAS	2449 / 352
10	MHEX / L20D	2175 / 228
11	ECL-ARP / PRI-BYN	533 / 717
12	MWSI / MNEX	1250
13	D602F / F601C	1838 / 1930
14	B10T / MH>SPC	165 / 21
15	OH E-W / OH>MH	97 / -197
16	R50M / OH>MP	137 / 150
17	G82R	-28
18	Dorsey bipole / CU bipole	3230 / 1104
19	Dorsey Reserve / Wtrtn SVC	193 / -10
20	Forbes SVC / MSC	34 / 600
21	Arrowhd-Wstn/ RCDC	554 / 0
22	**Steady State Vltgs**	
23	Dorsey 500/Dorsey 230	1.038 / 1.045
24	Roseau 500/Forbes 500	1.067 / 0.986
25	Chisago 500/EauClaire 345	0.985 / 1.016
26	Int Falls 115/Badoura 115	1.020 / 1.035
27	Drayton 230/Groton 345	1.033 / 1.026
28	**SS OS Relay Margins**	
29	D602F at Forbes/Dorsey	212% / 338%
30	82R at Rugby/L20D at Drayton	999% / 933%
31	R50M/F3M	980% / 327%
32	B10T	330%
33	**Min/MaxTransientVltg**	
34	Arrowhd 230	0.99 | 0.99
35	Boise 115	1.02 | 1.02
36	Dorsey 230	1.04 | 1.04
37	Forbes 230	0.99 | 0.99
38	Riverton 230	1.01 | 1.01
39	Coal Creek 230	1.03 | 1.03
40	Dickinson 345	0.99 | 0.99
41	Drayton 230	1.03 | 1.03
42	Groton 345	1.03 | 1.03
43	Tioga 230	1.02 | 1.02
44	Wahpeton 115	1.03 | 1.03
45	Watertown 345	1.02 | 1.02
46	**Dynamic Voltage Warnings**	
47		none
48		
49		
50		
51		
52		
53		
54	Worst Case Angle Damping	
55	Dorsey SUVP / UdHold	
56	Forbes DC Red (DCAR)	507%
57	K22W (max +dP @ t, d-ang)	0.0@(2.63332,0.0)
58	K22W (max -dP @ t, d-ang)	0.0@(4.99995,0.0)
59	K22W (max d-ang @ t, dP)	0.0@(3.21664,0.0)
60	**OS Rel Trip / Marg**	
61	MH - OH	
62	D602F at Forbes/Dorsey	212% / 338%
63	82R at Rugby/L20D at Drayton	999% / 933%
64	R50M / F3M	980% / 327%
65	B10T	330%
66	**FSCAPS (SS/Unav/Final)**	
67	Balta 230	(0 | 0 | 0)
68	Eau Cl 345 / Park Lk 115	(3 | 3 | 3) / (1 | 1 | 1)
69	Prairie 115 / Ramsey 230	(1 | 1 | 1) / (0 | 0 | 0)
70	Roseau 230 / Running 230	(0 | 0 | 0) / (1 | 1 | 1)
71	Shey 115 / Split Rock 115	(2 | 2 | 2) / (2 | 2 | 2)
72	**Damping Performance**	N/A

Appendix A.11 - Simulation Summary Tables With 125 MW GI-0503
(Sensitivity Case with Big Stone II)

1	**Case No.**	1	2	3	4	5
2	**Case Name**	g02-so09aa-ac3	g02-so09aa-ad3	g02-so09aa-ag1	g02-so09aa-ag3	g02-so09aa-bl3
3	**Disturbance**	ac3	ad3	ag1	ag3	bl3
4	**Prior Outage**	None	None	None	None	None
5	**Date/Time**	MAR 16 2008 21:48	MAR 16 2008 21:51	MAR 16 2008 22:27	MAR 16 2008 21:54	MAR 16 2008 21:56
6	**Comments**					
7						
8	**Steady State Flows**					
9	NDEX / EAST BIAS	2450 / 347	2450 / 347	2450 / 347	2450 / 347	2450 / 347
10	MHEX / L20D	2176 / 231	2176 / 231	2176 / 231	2176 / 231	2176 / 231
11	ECL-ARP / PRI-BYN	532 / 716	532 / 716	532 / 716	532 / 716	532 / 716
12	MWSI / MNEX	1249	1249	1249	1249	1249
13	D602F / F601C	1842 / 1930	1842 / 1930	1842 / 1930	1842 / 1930	1842 / 1930
14	B10T / MH>SPC	165 / 21	165 / 21	165 / 21	165 / 21	165 / 21
15	OH E-W / OH>MH	97 / -197	97 / -197	97 / -197	97 / -197	97 / -197
16	R50M / OH>MP	138 / 150	138 / 150	138 / 150	138 / 150	138 / 150
17	G82R	-35	-35	-35	-35	-35
18	Dorsey bipole / CU bipole	3230 / 1104	3230 / 1104	3230 / 1104	3230 / 1104	3230 / 1104
19	Dorsey Reserve / Wtrtn SVC	178 / -1	178 / -1	178 / -1	178 / -1	178 / -1
20	Forbes SVC / MSC	34 / 600	34 / 600	34 / 600	34 / 600	34 / 600
21	Arrowhd-Wstn/ RCDC	554 / 0	554 / 0	554 / 0	554 / 0	554 / 0
22	**Steady State Vltgs**					
23	Dorsey 500/Dorsey 230	1.038 / 1.045	1.038 / 1.045	1.038 / 1.045	1.038 / 1.045	1.038 / 1.045
24	Roseau 500/Forbes 500	1.067 / 0.986	1.067 / 0.986	1.067 / 0.986	1.067 / 0.986	1.067 / 0.986
25	Chisago 500/EauClaire 345	0.986 / 1.016	0.986 / 1.016	0.986 / 1.016	0.986 / 1.016	0.986 / 1.016
26	Int Falls 115/Badoura 115	1.020 / 1.032	1.020 / 1.032	1.020 / 1.032	1.020 / 1.032	1.020 / 1.032
27	Drayton 230/Groton 345	1.025 / 1.023	1.025 / 1.023	1.025 / 1.023	1.025 / 1.023	1.025 / 1.023
28	**SS OS Relay Margins**					
29	D602F at Forbes/Dorsey	211% / 336%	211% / 336%	211% / 336%	211% / 336%	211% / 336%
30	82R at Rugby/L20D at Drayton	999% / 903%	999% / 903%	999% / 903%	999% / 903%	999% / 903%
31	R50M/F3M	972% / 327%	972% / 327%	972% / 327%	972% / 327%	972% / 327%
32	B10T	328%	328%	328%	328%	328%
33	**Min/MaxTransientVltg**					
34	Arrowhd 230	0.96 | 1.00	0.97 | 1.01	0.95 | 1.00	0.95 | 1.00	0.94 | 1.01
35	Boise 115	0.99 | 1.03	1.00 | 1.03	0.99 | 1.03	0.99 | 1.03	0.99 | 1.04
36	Dorsey 230	1.02 | 1.06	1.03 | 1.06	1.02 | 1.06	1.02 | 1.06	1.02 | 1.06
37	Forbes 230	0.97 | 1.01	0.98 | 1.01	0.97 | 1.01	0.97 | 1.01	0.96 | 1.02
38	Riverton 230	0.97 | 1.03	0.98 | 1.04	0.97 | 1.03	0.97 | 1.03	0.93 | 1.06
39	Coal Creek 230	0.95 | 1.12	0.96 | 1.12	0.96 | 1.12	0.96 | 1.12	1.00 | 1.11
40	Dickinson 345	0.94 | 1.03	0.94 | 1.04	0.93 | 1.04	0.93 | 1.03	0.95 | 1.03
41	Drayton 230	0.98 | 1.11	0.99 | 1.09	0.97 | 1.11	0.98 | 1.11	0.97 | 1.13
42	Groton 345	0.89 | 1.06	0.90 | 1.07	0.87 | 1.06	0.87 | 1.06	0.86 | 1.11
43	Tioga 230	0.97 | 1.04	0.98 | 1.04	0.98 | 1.05	0.98 | 1.05	0.98 | 1.04
44	Wahpeton 115	0.94 | 1.08	0.96 | 1.09	0.94 | 1.09	0.94 | 1.09	0.88 | 1.12
45	Watertown 345	0.96 | 1.04	0.95 | 1.05	0.94 | 1.04	0.93 | 1.04	0.90 | 1.09
46	**Dynamic Voltage Warnings**					
47		none	none	none	none	
48						
49						
50						
51						
52						
53						
54	Worst Case Angle Damping					
55	Dorsey SUVP / UdHold					/ 0.158
56	Forbes DC Red (DCAR)	422%	395%	410%	416%	313%
57	K22W (max +dP @ t, d-ang)	11.6@(2.57499,0.7)	14.2@(2.50832,-1.0)	9.7@(2.60832,2.7)	11.9@(2.58332,1.0)	20.9@(2.84165,0.9)
58	K22W (max -dP @ t, d-ang)	20.5@(0.77500,5.1)	14.5@(0.66666,2.8)	22.5@(0.80833,5.4)	23.9@(0.79166,6.7)	20.9@(0.79166,2.5)
59	K22W (max d-ang @ t, dP)	8.0@(1.10833,-6.9)	5.5@(1.05833,-2.2)	8.8@(1.15833,-6.3)	10.0@(1.11666,-9.3)	8.2@(1.27500,-1.6)
60	**OS Rel Trip / Marg**					
61	MH - OH					
62	D602F at Forbes/Dorsey	156% / 243%	172% / 270%	155% / 241%	151% / 234%	153% / 240%
63	82R at Rugby/L20D at Drayton	999% / 702%	999% / 724%	999% / 699%	999% / 683%	999% / 599%
64	R50M / F3M	762% / 266%	820% / 276%	752% / 266%	738% / 264%	772% / 256%
65	B10T	188%	197%	183%	179%	140%
66	**FSCAPS (SS/Unav/Final)**					
67	Balta 230	(0 | 3 | 0)	(0 | 1 | 0)	(0 | 3 | 0)	(0 | 3 | 0)	(0 | 3 | 0)
68	Eau Cl 345 / Park Lk 115	(3 | 3 | 3) / (1 | 1 | 1)	(3 | 3 | 3) / (1 | 1 | 1)	(3 | 3 | 3) / (1 | 1 | 1)	(3 | 3 | 3) / (1 | 1 | 1)	(3 | 3 | 3) / (1 | 1 | 1)
69	Prairie 115 / Ramsey 230	(1 | 6 | 1) / (0 | 0 | 0)	(1 | 4 | 1) / (0 | 0 | 0)	(1 | 7 | 2) / (0 | 0 | 0)	(1 | 6 | 1) / (0 | 0 | 0)	(1 |10 | 2) / (0 | 0 | 0)
70	Roseau 230 / Running 230	(0 | 0 | 0) / (1 | 1 | 1)	(0 | 0 | 0) / (1 | 1 | 1)	(0 | 0 | 0) / (1 | 1 | 1)	(0 | 0 | 0) / (1 | 1 | 1)	(0 | 0 | 0) / (1 | 1 | 1)
71	Shey 115 / Split Rock 115	(2 | 5 | 3) / (2 | 2 | 2)	(2 | 5 | 2) / (2 | 2 | 2)	(2 | 5 | 2) / (2 | 2 | 2)	(2 | 5 | 3) / (2 | 2 | 2)	(2 | 5 | 0) / (2 | 2 | 2)
72	**Damping Performance**	N/A	N/A	N/A	N/A	N/A

Appendix A.11 - Simulation Summary Tables With 125 MW GI-0503
(Sensitivity Case with Big Stone II)

1	**Case No.**	6	7	8	9	10
2	**Case Name**	g02-so09aa-eb3	g02-so09aa-ec3	g02-so09aa-ef3	g02-so09aa-ei2	g02-so09aa-el3
3	**Disturbance**	eb3	ec3	ef3	ei2	el3
4	**Prior Outage**	None	None	None	None	None
5	**Date/Time**	MAR 16 2008 21:59	MAR 16 2008 22:01	MAR 16 2008 22:04	MAR 16 2008 22:09	MAR 16 2008 22:07
6	**Comments**					
7						
8	**Steady State Flows**					
9	NDEX / EAST BIAS	2450 / 347	2450 / 347	2450 / 347	2450 / 347	2450 / 347
10	MHEX / L20D	2176 / 231	2176 / 231	2176 / 231	2176 / 231	2176 / 231
11	ECL-ARP / PRI-BYN	532 / 716	532 / 716	532 / 716	532 / 716	532 / 716
12	MWSI / MNEX	1249	1249	1249	1249	1249
13	D602F / F601C	1842 / 1930	1842 / 1930	1842 / 1930	1842 / 1930	1842 / 1930
14	B10T / MH>SPC	165 / 21	165 / 21	165 / 21	165 / 21	165 / 21
15	OH E-W / OH>MH	97 / -197	97 / -197	97 / -197	97 / -197	97 / -197
16	R50M / OH>MP	138 / 150	138 / 150	138 / 150	138 / 150	138 / 150
17	G82R	-35	-35	-35	-35	-35
18	Dorsey bipole / CU bipole	3230 / 1104	3230 / 1104	3230 / 1104	3230 / 1104	3230 / 1104
19	Dorsey Reserve / Wtrtn SVC	178 / -1	178 / -1	178 / -1	178 / -1	178 / -1
20	Forbes SVC / MSC	34 / 600	34 / 600	34 / 600	34 / 600	34 / 600
21	Arrowhd-Wstn/ RCDC	554 / 0	554 / 0	554 / 0	554 / 0	554 / 0
22	**Steady State Vltgs**					
23	Dorsey 500/Dorsey 230	1.038 / 1.045	1.038 / 1.045	1.038 / 1.045	1.038 / 1.045	1.038 / 1.045
24	Roseau 500/Forbes 500	1.067 / 0.986	1.067 / 0.986	1.067 / 0.986	1.067 / 0.986	1.067 / 0.986
25	Chisago 500/EauClaire 345	0.986 / 1.016	0.986 / 1.016	0.986 / 1.016	0.986 / 1.016	0.986 / 1.016
26	Int Falls 115/Badoura 115	1.020 / 1.032	1.020 / 1.032	1.020 / 1.032	1.020 / 1.032	1.020 / 1.032
27	Drayton 230/Groton 345	1.025 / 1.023	1.025 / 1.023	1.025 / 1.023	1.025 / 1.023	1.025 / 1.023
28	**SS OS Relay Margins**					
29	D602F at Forbes/Dorsey	211% / 336%	211% / 336%	211% / 336%	211% / 336%	211% / 336%
30	82R at Rugby/L20D at Drayton	999% / 903%	999% / 903%	999% / 903%	999% / 903%	999% / 903%
31	R50M/F3M	972% / 327%	972% / 327%	972% / 327%	972% / 327%	972% / 327%
32	B10T	328%	328%	328%	328%	328%
33	**Min/MaxTransientVltg**					
34	Arrowhd 230	0.97 | 1.01	0.94 | 1.01	0.94 | 1.01	0.90 | 1.04	0.94 | 1.00
35	Boise 115	1.00 | 1.02	0.99 | 1.04	0.98 | 1.06	0.97 | 1.04	0.99 | 1.04
36	Dorsey 230	1.03 | 1.05	1.02 | 1.06	1.01 | 1.07	1.02 | 1.06	1.03 | 1.06
37	Forbes 230	0.99 | 1.01	0.97 | 1.01	0.96 | 1.02	0.90 | 1.01	0.97 | 1.01
38	Riverton 230	0.99 | 1.03	0.94 | 1.04	0.93 | 1.05	0.87 | 1.04	0.95 | 1.04
39	Coal Creek 230	0.96 | 1.11	0.91 | 1.14	1.00 | 1.10	1.00 | 1.12	0.93 | 1.14
40	Dickinson 345	0.95 | 1.02	0.92 | 1.04	0.95 | 1.03	0.95 | 1.05	0.92 | 1.04
41	Drayton 230	0.98 | 1.07	0.97 | 1.15	0.96 | 1.15	0.93 | 1.12	0.99 | 1.13
42	Groton 345	0.94 | 1.03	0.89 | 1.09	0.82 | 1.12	0.84 | 1.09	0.90 | 1.08
43	Tioga 230	1.00 | 1.04	0.98 | 1.04	0.96 | 1.05	0.98 | 1.05	0.99 | 1.04
44	Wahpeton 115	0.97 | 1.05	0.89 | 1.09	0.85 | 1.12	0.84 | 1.09	0.91 | 1.09
45	Watertown 345	0.98 | 1.02	0.92 | 1.07	0.87 | 1.09	0.86 | 1.08	0.93 | 1.06
46	**Dynamic Voltage Warnings**					
47		none			none	
48						
49						
50						
51						
52						
53						
54	Worst Case Angle Damping					
55	Dorsey SUVP / UdHold		/ 0.175	/ 0.158		/ 0.175
56	Forbes DC Red (DCAR)	411%	392%	267%	507%	394%
57	K22W (max +dP @ t, d-ang)	8.8@(2.58332,-1.9)	19.9@(2.65832,-1.6)	32.3@(2.99165,0.4)	80.3@(2.96665,-32.9)	18.4@(2.61665,-1.5)
58	K22W (max -dP @ t, d-ang)	10.9@(0.78333,2.0)	26.2@(0.73333,4.0)	28.3@(0.95000,4.4)	17.0@(0.66666,3.2)	22.8@(0.67500,3.0)
59	K22W (max d-ang @ t, dP)	3.8@(1.15833,-5.2)	9.2@(1.18333,-5.7)	11.9@(1.36666,-0.9)	-37.7@(2.43332,57.3)	7.8@(1.15833,-4.9)
60	**OS Rel Trip / Marg**					
61	MH - OH					
62	D602F at Forbes/Dorsey	177% / 277%	152% / 236%	141% / 219%	107% / 164%	157% / 245%
63	82R at Rugby/L20D at Drayton	999% / 647%	999% / 642%	999% / 542%	999% / 523%	999% / 685%
64	R50M / F3M	831% / 282%	754% / 260%	729% / 243%	672% / 191%	779% / 263%
65	B10T	290%	148%	128%	98%	171%
66	**FSCAPS (SS/Unav/Final)**					
67	Balta 230	(0 | 2 | 0)	(0 | 3 | 0)	(0 | 3 | 0)	(0 | 2 | 0)	(0 | 3 | 0)
68	Eau Cl 345 / Park Lk 115	(3 | 3 | 3) / (1 | 1 | 1)	(3 | 3 | 3) / (1 | 1 | 1)	(3 | 3 | 3) / (1 | 1 | 1)	(3 | 3 | 3) / (1 | 1 | 1)	(3 | 3 | 3) / (1 | 1 | 1)
69	Prairie 115 / Ramsey 230	(1 | 4 | 3) / (0 | 0 | 0)	(1 | 7 | 1) / (0 | 0 | 0)	(1 |11 | 2) / (0 | 0 | 0)	(1 | 6 | 1) / (0 | 0 | 0)	(1 | 5 | 1) / (0 | 0 | 0)
70	Roseau 230 / Running 230	(0 | 0 | 0) / (1 | 1 | 1)	(0 | 0 | 0) / (1 | 1 | 1)	(0 | 1 | 0) / (1 | 2 | 1)	(0 | 1 | 0) / (1 | 2 | 1)	(0 | 0 | 0) / (1 | 1 | 1)
71	Shey 115 / Split Rock 115	(2 | 3 | 3) / (2 | 2 | 2)	(2 | 5 | 2) / (2 | 2 | 2)	(2 | 5 | 0) / (2 | 2 | 2)	(2 | 5 | 2) / (2 | 2 | 2)	(2 | 5 | 2) / (2 | 2 | 2)
72	**Damping Performance**	N/A	N/A	N/A	N/A	N/A

Table A

Appendix A.11 - Simulation Summary Tables With 125 MW GI-0503
(Sensitivity Case with Big Stone II)

1	**Case No.**	11	12	13	14	15
2	**Case Name**	g02-so09aa-eq1	g02-so09aa-ev0	g02-so09aa-fd1	g02-so09aa-fd3	g02-so09aa-fd4
3	**Disturbance**	eq1	ev0	fd1	fd3	fd4
4	**Prior Outage**	None	None	None	None	None
5	**Date/Time**	MAR 16 2008 22:30	MAR 16 2008 22:11	MAR 16 2008 22:32	MAR 16 2008 22:14	MAR 16 2008 22:37
6	**Comments**					
7						
8	**Steady State Flows**					
9	NDEX / EAST BIAS	2450 / 347	2450 / 347	2450 / 347	2450 / 347	2450 / 347
10	MHEX / L20D	2176 / 231	2176 / 231	2176 / 231	2176 / 231	2176 / 231
11	ECL-ARP / PRI-BYN	532 / 716	532 / 716	532 / 716	532 / 716	532 / 716
12	MWSI / MNEX	1249	1249	1249	1249	1249
13	D602F / F601C	1842 / 1930	1842 / 1930	1842 / 1930	1842 / 1930	1842 / 1930
14	B10T / MH>SPC	165 / 21	165 / 21	165 / 21	165 / 21	165 / 21
15	OH E-W / OH>MH	97 / -197	97 / -197	97 / -197	97 / -197	97 / -197
16	R50M / OH>MP	138 / 150	138 / 150	138 / 150	138 / 150	138 / 150
17	G82R	-35	-35	-35	-35	-35
18	Dorsey bipole / CU bipole	3230 / 1104	3230 / 1104	3230 / 1104	3230 / 1104	3230 / 1104
19	Dorsey Reserve / Wtrtn SVC	178 / -1	178 / -1	178 / -1	178 / -1	178 / -1
20	Forbes SVC / MSC	34 / 600	34 / 600	34 / 600	34 / 600	34 / 600
21	Arrowhd-Wstn/ RCDC	554 / 0	554 / 0	554 / 0	554 / 0	554 / 0
22	**Steady State Vltgs**					
23	Dorsey 500/Dorsey 230	1.038 / 1.045	1.038 / 1.045	1.038 / 1.045	1.038 / 1.045	1.038 / 1.045
24	Roseau 500/Forbes 500	1.067 / 0.986	1.067 / 0.986	1.067 / 0.986	1.067 / 0.986	1.067 / 0.986
25	Chisago 500/EauClaire 345	0.986 / 1.016	0.986 / 1.016	0.986 / 1.016	0.986 / 1.016	0.986 / 1.016
26	Int Falls 115/Badoura 115	1.020 / 1.032	1.020 / 1.032	1.020 / 1.032	1.020 / 1.032	1.020 / 1.032
27	Drayton 230/Groton 345	1.025 / 1.023	1.025 / 1.023	1.025 / 1.023	1.025 / 1.023	1.025 / 1.023
28	**SS OS Relay Margins**					
29	D602F at Forbes/Dorsey	211% / 336%	211% / 336%	211% / 336%	211% / 336%	211% / 336%
30	82R at Rugby/L20D at Drayton	999% / 903%	999% / 903%	999% / 903%	999% / 903%	999% / 903%
31	R50M/F3M	972% / 327%	972% / 327%	972% / 327%	972% / 327%	972% / 327%
32	B10T	328%	328%	328%	328%	328%
33	**Min/MaxTransientVltg**					
34	Arrowhd 230	0.94 | 1.03	0.99 | 1.03	0.98 | 1.03	0.92 | 1.01	0.93 | 1.01
35	Boise 115	0.99 | 1.03	0.99 | 1.03	0.98 | 1.05	0.98 | 1.05	0.99 | 1.04
36	Dorsey 230	1.02 | 1.06	1.02 | 1.05	1.02 | 1.06	1.01 | 1.06	1.02 | 1.06
37	Forbes 230	0.95 | 1.01	0.98 | 1.01	0.97 | 1.02	0.95 | 1.02	0.96 | 1.02
38	Riverton 230	0.92 | 1.04	0.95 | 1.03	0.95 | 1.05	0.92 | 1.06	0.95 | 1.06
39	Coal Creek 230	0.95 | 1.16	0.95 | 1.12	0.98 | 1.15	0.95 | 1.16	0.97 | 1.15
40	Dickinson 345	0.98 | 1.08	0.93 | 1.04	0.93 | 1.05	0.92 | 1.06	0.93 | 1.06
41	Drayton 230	0.98 | 1.10	0.98 | 1.10	0.96 | 1.13	0.96 | 1.14	0.98 | 1.14
42	Groton 345	0.87 | 1.10	0.89 | 1.05	0.89 | 1.09	0.84 | 1.11	0.90 | 1.11
43	Tioga 230	0.99 | 1.04	1.00 | 1.04	0.99 | 1.05	0.97 | 1.05	0.98 | 1.05
44	Wahpeton 115	0.89 | 1.09	0.91 | 1.06	0.87 | 1.10	0.84 | 1.12	0.88 | 1.12
45	Watertown 345	0.90 | 1.08	0.93 | 1.04	0.92 | 1.07	0.88 | 1.09	0.93 | 1.08
46	**Dynamic Voltage Warnings**					
47		none	none		63199 [JAMSTN1Y] 0.66	63369 [JAMESTN3] 0.68
48					63200 [JAMSTN2Y] 0.66	63199 [JAMSTN1Y] 0.68
49					63369 [JAMESTN3] 0.66	63200 [JAMSTN2Y] 0.68
50					63270 [LADISH 7] 0.67	
51					63271 [AVIKO 7] 0.67	
52					63272 [JAMESPK7] 0.67	
53					273 [JAMETAP7] 0.67 +m	
54	Worst Case Angle Damping					
55	Dorsey SUVP / UdHold		/ 0.166		/ 0.166	
56	Forbes DC Red (DCAR)	507%	431%	329%	284%	324%
57	K22W (max +dP @ t, d-ang)	49.6@(2.72499,-20.9)	13.5@(2.70832,-2.6)	20.6@(2.80832,-0.7)	32.2@(2.77498,-2.6)	23.3@(2.74165,-1.1)
58	K22W (max -dP @ t, d-ang)	10.0@(0.51666,1.8)	21.1@(0.72500,2.4)	25.0@(0.92500,3.9)	30.4@(0.90000,7.5)	23.8@(0.88333,4.2)
59	K22W (max d-ang @ t, dP)	-24.1@(2.23333,36.9)	7.1@(1.23333,-7.9)	8.2@(1.30833,-2.9)	13.2@(1.26666,-9.3)	8.9@(1.25833,-0.8)
60	**OS Rel Trip / Marg**					
61	MH - OH					
62	D602F at Forbes/Dorsey	145% / 225%	145% / 224%	142% / 219%	138% / 213%	152% / 238%
63	82R at Rugby/L20D at Drayton	999% / 581%	999% / 767%	999% / 683%	999% / 550%	999% / 609%
64	R50M / F3M	766% / 224%	718% / 250%	712% / 244%	709% / 250%	765% / 255%
65	B10T	119%	239%	172%	116%	138%
66	**FSCAPS (SS/Unav/Final)**					
67	Balta 230	(0 | 2 | 0)	(0 | 3 | 0)	(0 | 1 | 0)	(0 | 3 | 0)	(0 | 1 | 0)
68	Eau Cl 345 / Park Lk 115	(3 | 3 | 3) / (1 | 1 | 1)	(3 | 3 | 3) / (1 | 1 | 1)	(3 | 3 | 3) / (1 | 1 | 1)	(3 | 3 | 3) / (1 | 1 | 1)	(3 | 3 | 3) / (1 | 1 | 1)
69	Prairie 115 / Ramsey 230	(1 | 5 | 1) / (0 | 0 | 0)	(1 | 5 | 2) / (0 | 0 | 0)	(1 | 7 | 2) / (0 | 0 | 0)	(1 | 8 | 2) / (0 | 0 | 0)	(1 | 8 | 2) / (0 | 0 | 0)
70	Roseau 230 / Running 230	(0 | 0 | 0) / (1 | 1 | 1)	(0 | 0 | 0) / (1 | 1 | 1)	(0 | 1 | 1) / (1 | 2 | 1)	(0 | 1 | 0) / (1 | 2 | 1)	(0 | 0 | 0) / (1 | 1 | 1)
71	Shey 115 / Split Rock 115	(2 | 5 | 2) / (2 | 2 | 2)	(2 | 5 | 4) / (2 | 2 | 2)	(2 | 5 | 1) / (2 | 2 | 2)	(2 | 5 | 0) / (2 | 2 | 2)	(2 | 5 | 0) / (2 | 2 | 2)
72	**Damping Performance**	N/A	N/A	N/A	N/A	N/A

Appendix A.11 - Simulation Summary Tables With 125 MW GI-0503
(Sensitivity Case with Big Stone II)

1	**Case No.**	16	17	18	19	20
2	**Case Name**	g02-so09aa-fd9	g02-so09aa-fdk	g02-so09aa-fdl	g02-so09aa-ha3	g02-so09aa-ha3-nt
3	**Disturbance**	fd9	fdk	fdl	ha3	-nt
4	**Prior Outage**	None	None	None	None	None
5	**Date/Time**	MAR 16 2008 22:25	MAR 16 2008 22:34	MAR 16 2008 22:39	MAR 16 2008 22:21	MAR 17 2008 14:34
6	**Comments**					
7						
8	**Steady State Flows**					
9	NDEX / EAST BIAS	2450 / 347	2450 / 347	2450 / 347	2450 / 347	2450 / 347
10	MHEX / L20D	2176 / 231	2176 / 231	2176 / 231	2176 / 231	2176 / 231
11	ECL-ARP / PRI-BYN	532 / 716	532 / 716	532 / 716	532 / 716	532 / 716
12	MWSI / MNEX	1249	1249	1249	1249	1249
13	D602F / F601C	1842 / 1930	1842 / 1930	1842 / 1930	1842 / 1930	1842 / 1930
14	B10T / MH>SPC	165 / 21	165 / 21	165 / 21	165 / 21	165 / 21
15	OH E-W / OH>MH	97 / -197	97 / -197	97 / -197	97 / -197	97 / -197
16	R50M / OH>MP	138 / 150	138 / 150	138 / 150	138 / 150	138 / 150
17	G82R	-35	-35	-35	-35	-35
18	Dorsey bipole / CU bipole	3230 / 1104	3230 / 1104	3230 / 1104	3230 / 1104	3230 / 1104
19	Dorsey Reserve / Wtrtn SVC	178 / -1	178 / -1	178 / -1	178 / -1	178 / -1
20	Forbes SVC / MSC	34 / 600	34 / 600	34 / 600	34 / 600	34 / 600
21	Arrowhd-Wstn/ RCDC	554 / 0	554 / 0	554 / 0	554 / 0	554 / 0
22	**Steady State Vltgs**					
23	Dorsey 500/Dorsey 230	1.038 / 1.045	1.038 / 1.045	1.038 / 1.045	1.038 / 1.045	1.038 / 1.045
24	Roseau 500/Forbes 500	1.067 / 0.986	1.067 / 0.986	1.067 / 0.986	1.067 / 0.986	1.067 / 0.986
25	Chisago 500/EauClaire 345	0.986 / 1.016	0.986 / 1.016	0.986 / 1.016	0.986 / 1.016	0.986 / 1.016
26	Int Falls 115/Badoura 115	1.020 / 1.032	1.020 / 1.032	1.020 / 1.032	1.020 / 1.032	1.020 / 1.032
27	Drayton 230/Groton 345	1.025 / 1.023	1.025 / 1.023	1.025 / 1.023	1.025 / 1.023	1.025 / 1.023
28	**SS OS Relay Margins**					
29	D602F at Forbes/Dorsey	211% / 336%	211% / 336%	211% / 336%	211% / 336%	211% / 336%
30	82R at Rugby/L20D at Drayton	999% / 903%	999% / 903%	999% / 903%	999% / 903%	999% / 903%
31	R50M/F3M	972% / 327%	972% / 327%	972% / 327%	972% / 327%	972% / 327%
32	B10T	328%	328%	328%	328%	328%
33	**Min/MaxTransientVltg**					
34	Arrowhd 230	0.93 | 1.01	1.00 | 1.05	0.94 | 1.03	0.99 | 1.00	0.99 | 0.99
35	Boise 115	0.99 | 1.03	1.00 | 1.03	1.00 | 1.03	1.02 | 1.02	1.02 | 1.02
36	Dorsey 230	1.02 | 1.06	1.03 | 1.06	1.03 | 1.06	1.04 | 1.05	1.04 | 1.05
37	Forbes 230	0.96 | 1.01	0.98 | 1.02	0.98 | 1.02	0.99 | 1.00	0.99 | 1.00
38	Riverton 230	0.95 | 1.05	0.99 | 1.04	0.98 | 1.04	1.01 | 1.02	1.01 | 1.01
39	Coal Creek 230	0.96 | 1.14	0.98 | 1.10	0.97 | 1.11	1.03 | 1.05	1.03 | 1.04
40	Dickinson 345	0.93 | 1.05	0.95 | 1.04	0.95 | 1.04	0.99 | 1.00	0.99 | 1.00
41	Drayton 230	0.97 | 1.11	1.00 | 1.08	0.99 | 1.11	1.02 | 1.03	1.02 | 1.03
42	Groton 345	0.90 | 1.09	0.97 | 1.09	0.96 | 1.10	1.02 | 1.04	1.02 | 1.03
43	Tioga 230	0.99 | 1.04	1.00 | 1.04	0.99 | 1.04	1.01 | 1.02	1.02 | 1.02
44	Wahpeton 115	0.89 | 1.10	0.96 | 1.09	0.96 | 1.10	1.03 | 1.04	1.03 | 1.03
45	Watertown 345	0.93 | 1.07	0.99 | 1.07	0.99 | 1.08	1.02 | 1.03	1.02 | 1.02
46	**Dynamic Voltage Warnings**					
47		none	none	none	none	none
48						
49						
50						
51						
52						
53						
54	Worst Case Angle Damping					
55	Dorsey SUVP / UdHold	/ 0.166				
56	Forbes DC Red (DCAR)	371%	473%	485%	504%	503%
57	K22W (max +dP @ t, d-ang)	19.9@(2.67499,-1.3)	43.3@(2.49999,-17.2)	46.5@(2.51666,-16.4)	12.3@(2.09999,-4.7)	2.0@(0.14167,-0.1)
58	K22W (max -dP @ t, d-ang)	19.5@(0.90000,5.5)	2.3@(0.30833,-0.2)	2.3@(0.58333,-1.0)	0.8@(0.25000,0.0)	1.1@(0.26667,0.0)
59	K22W (max d-ang @ t, dP)	8.1@(1.18333,-4.6)	-19.2@(1.99166,31.3)	-19.0@(1.96666,31.4)	-4.8@(2.44999,10.8)	-0.4@(1.50833,-0.1)
60	**OS Rel Trip / Marg**					
61	MH - OH					
62	D602F at Forbes/Dorsey	157% / 246%	179% / 282%	179% / 281%	209% / 333%	209% / 333%
63	82R at Rugby/L20D at Drayton	999% / 645%	999% / 638%	999% / 570%	999% / 847%	999% / 884%
64	R50M / F3M	779% / 263%	817% / 238%	813% / 242%	969% / 311%	964% / 323%
65	B10T	161%	151%	125%	256%	315%
66	**FSCAPS (SS/Unav/Final)**					
67	Balta 230	(0 | 2 | 0)	(0 | 1 | 0)	(0 | 1 | 0)	(0 | 0 | 0)	(0 | 0 | 0)
68	Eau Cl 345 / Park Lk 115	(3 | 3 | 3) / (1 | 1 | 1)	(3 | 3 | 3) / (1 | 1 | 1)	(3 | 3 | 3) / (1 | 1 | 1)	(3 | 3 | 3) / (1 | 1 | 1)	(3 | 3 | 3) / (1 | 1 | 1)
69	Prairie 115 / Ramsey 230	(1 | 7 | 2) / (0 | 0 | 0)	(1 | 3 | 1) / (0 | 0 | 0)	(1 | 5 | 1) / (0 | 0 | 0)	(1 | 1 | 1) / (0 | 0 | 0)	(1 | 1 | 1) / (0 | 0 | 0)
70	Roseau 230 / Running 230	(0 | 0 | 0) / (1 | 1 | 1)	(0 | 0 | 0) / (1 | 1 | 1)	(0 | 0 | 0) / (1 | 1 | 1)	(0 | 0 | 0) / (1 | 1 | 1)	(0 | 0 | 0) / (1 | 1 | 1)
71	Shey 115 / Split Rock 115	(2 | 5 | 1) / (2 | 2 | 2)	(2 | 5 | 1) / (2 | 2 | 2)	(2 | 5 | 0) / (2 | 2 | 2)	(2 | 2 | 2) / (2 | 2 | 2)	(2 | 2 | 2) / (2 | 2 | 2)
72	**Damping Performance**	N/A	N/A	N/A	N/A	N/A

Appendix A.11 - Simulation Summary Tables With 125 MW GI-0503
(Sensitivity Case with Big Stone II)

1	**Case No.**	21	22	23	24	25
2	**Case Name**	g02-so09aa-hb3	g02-so09aa-hb3-nt	g02-so09aa-nmz	g02-so09aa-pcs	g02-so09aa-pct
3	**Disturbance**	hb3	-nt	nmz	pcs	pct
4	**Prior Outage**	None	None	None	None	None
5	**Date/Time**	MAR 16 2008 22:23	MAR 17 2008 14:35	MAR 16 2008 23:12	MAR 16 2008 22:44	MAR 16 2008 22:51
6	**Comments**					
7						
8	**Steady State Flows**					
9	NDEX / EAST BIAS	2450 / 347	2450 / 347	2450 / 347	2450 / 347	2450 / 347
10	MHEX / L20D	2176 / 231	2176 / 231	2176 / 231	2176 / 231	2176 / 231
11	ECL-ARP / PRI-BYN	532 / 716	532 / 716	532 / 716	532 / 716	532 / 716
12	MWSI / MNEX	1249	1249	1249	1249	1249
13	D602F / F601C	1842 / 1930	1842 / 1930	1842 / 1930	1842 / 1930	1842 / 1930
14	B10T / MH>SPC	165 / 21	165 / 21	165 / 21	165 / 21	165 / 21
15	OH E-W / OH>MH	97 / -197	97 / -197	97 / -197	97 / -197	97 / -197
16	R50M / OH>MP	138 / 150	138 / 150	138 / 150	138 / 150	138 / 150
17	G82R	-35	-35	-35	-35	-35
18	Dorsey bipole / CU bipole	3230 / 1104	3230 / 1104	3230 / 1104	3230 / 1104	3230 / 1104
19	Dorsey Reserve / Wtrtn SVC	178 / -1	178 / -1	178 / -1	178 / -1	178 / -1
20	Forbes SVC / MSC	34 / 600	34 / 600	34 / 600	34 / 600	34 / 600
21	Arrowhd-Wstn/ RCDC	554 / 0	554 / 0	554 / 0	554 / 0	554 / 0
22	**Steady State Vltgs**					
23	Dorsey 500/Dorsey 230	1.038 / 1.045	1.038 / 1.045	1.038 / 1.045	1.038 / 1.045	1.038 / 1.045
24	Roseau 500/Forbes 500	1.067 / 0.986	1.067 / 0.986	1.067 / 0.986	1.067 / 0.986	1.067 / 0.986
25	Chisago 500/EauClaire 345	0.986 / 1.016	0.986 / 1.016	0.986 / 1.016	0.986 / 1.016	0.986 / 1.016
26	Int Falls 115/Badoura 115	1.020 / 1.032	1.020 / 1.032	1.020 / 1.032	1.020 / 1.032	1.020 / 1.032
27	Drayton 230/Groton 345	1.025 / 1.023	1.025 / 1.023	1.025 / 1.023	1.025 / 1.023	1.025 / 1.023
28	**SS OS Relay Margins**					
29	D602F at Forbes/Dorsey	211% / 336%	211% / 336%	211% / 336%	211% / 336%	211% / 336%
30	82R at Rugby/L20D at Drayton	999% / 903%	999% / 903%	999% / 903%	999% / 903%	999% / 903%
31	R50M/F3M	972% / 327%	972% / 327%	972% / 327%	972% / 327%	972% / 327%
32	B10T	328%	328%	328%	328%	328%
33	**Min/MaxTransientVltg**					
34	Arrowhd 230	0.99 | 1.00	0.99 | 0.99	(0.58)0.78 | 1.03	0.85 | 0.97	0.93 | 0.96
35	Boise 115	1.02 | 1.02	1.02 | 1.02	0.96 | 1.05	0.99 | 1.04	1.02 | 1.03
36	Dorsey 230	1.04 | 1.05	1.04 | 1.05	1.05 | 1.22	1.02 | 1.09	1.04 | 1.05
37	Forbes 230	0.99 | 1.00	0.99 | 1.00	0.94 | 1.02	0.97 | 1.02	0.99 | 1.00
38	Riverton 230	1.01 | 1.02	1.01 | 1.01	0.79 | 1.03	0.99 | 1.02	1.01 | 1.02
39	Coal Creek 230	1.03 | 1.05	1.03 | 1.04	0.91 | 1.12	0.96 | 1.07	1.02 | 1.05
40	Dickinson 345	0.99 | 1.00	0.99 | 1.00	0.87 | 1.07	0.94 | 1.03	0.98 | 1.01
41	Drayton 230	1.02 | 1.03	1.02 | 1.03	0.99 | 1.08	1.00 | 1.04	1.02 | 1.04
42	Groton 345	1.02 | 1.04	1.02 | 1.03	0.83 | 1.05	0.97 | 1.03	1.01 | 1.03
43	Tioga 230	1.01 | 1.02	1.01 | 1.02	0.98 | 1.04	0.98 | 1.03	1.01 | 1.02
44	Wahpeton 115	1.03 | 1.04	1.03 | 1.03	0.84 | 1.07	1.00 | 1.05	1.03 | 1.04
45	Watertown 345	1.02 | 1.03	1.02 | 1.02	0.83 | 1.04	0.99 | 1.03	1.01 | 1.03
46	**Dynamic Voltage Warnings**					
47		none	none	61614 [98L TAP4] 0.79	none	none
48				61615 [ARROWHD4] 0.79		
49				61616 [HILLTOP4] 0.79		
50				61686 [15TH AV7] 0.80		
51				61672 [HILLTOP7] 0.81		
52				61673 [ARROWHD7] 0.81		
53				74 [HANESRD7] 0.81 +m		
54	Worst Case Angle Damping				SHERC3 / 67.23%	SHERC3 / 53.73%
55	Dorsey SUVP / UdHold			/ 0.133		
56	Forbes DC Red (DCAR)	504%	500%	507%	162%	303%
57	K22W (max +dP @ t, d-ang)	12.3@(2.09999,-4.7)	2.5@(1.17500,-0.5)	148.8@(2.74165,-61.6)	7.4@(3.54997,1.7)	0.0@(0.10000,0.0)
58	K22W (max -dP @ t, d-ang)	0.8@(0.25000,0.0)	0.8@(0.25833,0.0)	94.4@(0.23333,7.2)	54.3@(1.73333,20.9)	27.5@(2.45832,12.5)
59	K22W (max d-ang @ t, dP)	-4.8@(2.45832,10.7)	-0.8@(1.65833,1.2)	-61.6@(2.70832,148.1)	29.1@(1.16666,-43.4)	12.7@(2.23333,-27.2)
60	**OS Rel Trip / Marg**					
61	MH - OH					
62	D602F at Forbes/Dorsey	209% / 333%	210% / 335%	0.18333 sec / 0.18333 sec	160% / 249%	211% / 336%
63	82R at Rugby/L20D at Drayton	999% / 846%	999% / 903%	999% / 574%	999% / 601%	999% / 831%
64	R50M / F3M	969% / 311%	967% / 324%	549% / 166%	664% / 327%	903% / 327%
65	B10T	256%	291%	120%	154%	290%
66	**FSCAPS (SS/Unav/Final)**					
67	Balta 230	(0 | 0 | 0)	(0 | 0 | 0)	(0 | 2 | 0)	(0 | 1 | 0)	(0 | 0 | 0)
68	Eau Cl 345 / Park Lk 115	(3 | 3 | 3) / (1 | 1 | 1)	(3 | 3 | 3) / (1 | 1 | 1)	(3 | 3 | 1) / (1 | 1 | 1)	(3 | 4 | 3) / (1 | 3 | 3)	(3 | 3 | 2) / (1 | 1 | 1)
69	Prairie 115 / Ramsey 230	(1 | 1 | 1) / (0 | 0 | 0)	(1 | 1 | 1) / (0 | 0 | 0)	(1 | 4 | 1) / (0 | 0 | 0)	(1 | 1 | 1) / (0 | 0 | 0)	(1 | 1 | 1) / (0 | 0 | 0)
70	Roseau 230 / Running 230	(0 | 0 | 0) / (1 | 1 | 1)	(0 | 0 | 0) / (1 | 1 | 1)	(0 | 0 | 0) / (1 | 3 | 1)	(0 | 0 | 0) / (1 | 1 | 1)	(0 | 0 | 0) / (1 | 1 | 1)
71	Shey 115 / Split Rock 115	(2 | 2 | 2) / (2 | 2 | 2)	(2 | 2 | 2) / (2 | 2 | 2)	(2 | 5 | 4) / (2 | 2 | 2)	(2 | 3 | 3) / (2 | 2 | 2)	(2 | 2 | 2) / (2 | 2 | 2)
72	**Damping Performance**	N/A	N/A	N/A	N/A	N/A

Table A

Appendix A.11 - Simulation Summary Tables With 125 MW GI-0503
(Sensitivity Case with Big Stone II)

1	**Case No.**	26	27	28	29	30
2	**Case Name**	g02-so09aa-pys	g02-so09aa-pyt	g02-so09aa-ya3	g02-so09aa-yas	g02-so09aa-zss
3	**Disturbance**	pys	pyt	ya3	yas	zss
4	**Prior Outage**	None	None	None	None	None
5	**Date/Time**	MAR 16 2008 22:58	MAR 16 2008 23:05	MAR 16 2008 22:19	MAR 16 2008 22:41	MAR 16 2008 23:15
6	**Comments**					
7						
8	**Steady State Flows**					
9	NDEX / EAST BIAS	2450 / 347	2450 / 347	2450 / 347	2450 / 347	2450 / 347
10	MHEX / L20D	2176 / 231	2176 / 231	2176 / 231	2176 / 231	2176 / 231
11	ECL-ARP / PRI-BYN	532 / 716	532 / 716	532 / 716	532 / 716	532 / 716
12	MWSI / MNEX	1249	1249	1249	1249	1249
13	D602F / F601C	1842 / 1930	1842 / 1930	1842 / 1930	1842 / 1930	1842 / 1930
14	B10T / MH>SPC	165 / 21	165 / 21	165 / 21	165 / 21	165 / 21
15	OH E-W / OH>MH	97 / -197	97 / -197	97 / -197	97 / -197	97 / -197
16	R50M / OH>MP	138 / 150	138 / 150	138 / 150	138 / 150	138 / 150
17	G82R	-35	-35	-35	-35	-35
18	Dorsey bipole / CU bipole	3230 / 1104	3230 / 1104	3230 / 1104	3230 / 1104	3230 / 1104
19	Dorsey Reserve / Wtrtn SVC	178 / -1	178 / -1	178 / -1	178 / -1	178 / -1
20	Forbes SVC / MSC	34 / 600	34 / 600	34 / 600	34 / 600	34 / 600
21	Arrowhd-Wstn/ RCDC	554 / 0	554 / 0	554 / 0	554 / 0	554 / 0
22	**Steady State Vltgs**					
23	Dorsey 500/Dorsey 230	1.038 / 1.045	1.038 / 1.045	1.038 / 1.045	1.038 / 1.045	1.038 / 1.045
24	Roseau 500/Forbes 500	1.067 / 0.986	1.067 / 0.986	1.067 / 0.986	1.067 / 0.986	1.067 / 0.986
25	Chisago 500/EauClaire 345	0.986 / 1.016	0.986 / 1.016	0.986 / 1.016	0.986 / 1.016	0.986 / 1.016
26	Int Falls 115/Badoura 115	1.020 / 1.032	1.020 / 1.032	1.020 / 1.032	1.020 / 1.032	1.020 / 1.032
27	Drayton 230/Groton 345	1.025 / 1.023	1.025 / 1.023	1.025 / 1.023	1.025 / 1.023	1.025 / 1.023
28	**SS OS Relay Margins**					
29	D602F at Forbes/Dorsey	211% / 336%	211% / 336%	211% / 336%	211% / 336%	211% / 336%
30	82R at Rugby/L20D at Drayton	999% / 903%	999% / 903%	999% / 903%	999% / 903%	999% / 903%
31	R50M/F3M	972% / 327%	972% / 327%	972% / 327%	972% / 327%	972% / 327%
32	B10T	328%	328%	328%	328%	328%
33	**Min/MaxTransientVltg**					
34	Arrowhd 230	0.96 | 1.00	0.98 | 1.00	0.98 | 0.99	0.89 | 0.96	0.99 | 0.99
35	Boise 115	1.00 | 1.05	1.02 | 1.03	1.02 | 1.04	1.01 | 1.04	1.02 | 1.02
36	Dorsey 230	1.03 | 1.07	1.04 | 1.05	1.04 | 1.06	1.03 | 1.07	1.04 | 1.04
37	Forbes 230	0.98 | 1.04	0.99 | 1.01	0.98 | 1.00	0.97 | 1.00	1.00 | 1.00
38	Riverton 230	1.00 | 1.03	1.01 | 1.03	1.00 | 1.01	0.97 | 1.01	1.01 | 1.01
39	Coal Creek 230	0.98 | 1.08	1.02 | 1.05	1.02 | 1.05	0.98 | 1.06	1.03 | 1.03
40	Dickinson 345	0.97 | 1.03	0.98 | 1.01	0.97 | 0.99	0.93 | 1.00	0.99 | 0.99
41	Drayton 230	1.00 | 1.04	1.02 | 1.04	1.02 | 1.04	1.01 | 1.04	1.02 | 1.02
42	Groton 345	0.99 | 1.03	1.01 | 1.03	1.01 | 1.03	1.00 | 1.02	1.02 | 1.02
43	Tioga 230	0.99 | 1.03	1.01 | 1.02	1.01 | 1.03	1.00 | 1.03	1.02 | 1.02
44	Wahpeton 115	1.01 | 1.05	1.03 | 1.05	1.03 | 1.04	1.01 | 1.04	1.03 | 1.03
45	Watertown 345	1.00 | 1.03	1.01 | 1.02	1.01 | 1.02	1.01 | 1.02	1.02 | 1.02
46	**Dynamic Voltage Warnings**					
47		none	none	none	39449] 1.21	none
48						
49						
50						
51						
52						
53						
54	Worst Case Angle Damping	SHERC3 / 72.31%	SHERC3 / 58.59%			
55	Dorsey SUVP / UdHold					
56	Forbes DC Red (DCAR)	141%	339%	396%	432%	507%
57	K22W (max +dP @ t, d-ang)	7.6@(3.49997,-0.3)	0.0@(0.10000,0.0)	3.1@(0.11667,0.6)	2.2@(0.11667,0.4)	0.0@(2.60832,0.0)
58	K22W (max -dP @ t, d-ang)	36.3@(1.71666,12.4)	19.2@(1.87500,8.7)	26.9@(1.70000,12.6)	24.3@(1.58333,10.8)	0.0@(0.00000,0.0)
59	K22W (max d-ang @ t, dP)	21.1@(1.14166,-25.9)	9.1@(2.19999,-18.5)	12.9@(2.00000,-23.1)	12.0@(1.10833,-16.3)	0.0@(3.11665,0.0)
60	**OS Rel Trip / Marg**					
61	MH - OH					
62	D602F at Forbes/Dorsey	163% / 253%	211% / 336%	204% / 326%	185% / 293%	211% / 336%
63	82R at Rugby/L20D at Drayton	999% / 658%	999% / 835%	999% / 783%	999% / 778%	999% / 903%
64	R50M / F3M	728% / 314%	943% / 327%	972% / 327%	886% / 327%	972% / 327%
65	B10T	178%	287%	263%	258%	328%
66	**FSCAPS (SS/Unav/Final)**					
67	Balta 230	(0 | 0 | 0)	(0 | 0 | 0)	(0 | 0 | 0)	(0 | 0 | 0)	(0 | 0 | 0)
68	Eau Cl 345 / Park Lk 115	(3 | 4 | 4) / (1 | 3 | 3)	(3 | 3 | 3) / (1 | 1 | 1)	(3 | 4 | 4) / (1 | 1 | 1)	(3 | 4 | 4) / (1 | 1 | 1)	(3 | 3 | 3) / (1 | 1 | 1)
69	Prairie 115 / Ramsey 230	(1 | 1 | 1) / (0 | 0 | 0)	(1 | 1 | 1) / (0 | 0 | 0)	(1 | 1 | 1) / (0 | 0 | 0)	(1 | 1 | 1) / (0 | 0 | 0)	(1 | 1 | 1) / (0 | 0 | 0)
70	Roseau 230 / Running 230	(0 | 0 | 0) / (1 | 1 | 1)	(0 | 0 | 0) / (1 | 1 | 1)	(0 | 0 | 0) / (1 | 1 | 1)	(0 | 0 | 0) / (1 | 1 | 1)	(0 | 0 | 0) / (1 | 1 | 1)
71	Shey 115 / Split Rock 115	(2 | 2 | 2) / (2 | 2 | 2)	(2 | 2 | 2) / (2 | 2 | 2)	(2 | 2 | 2) / (2 | 2 | 2)	(2 | 2 | 2) / (2 | 2 | 2)	(2 | 2 | 2) / (2 | 2 | 2)
72	**Damping Performance**	N/A	N/A	N/A	N/A	N/A

Appendix B – Steady-State Analysis – Case Summaries

Appendix B.1: Summary for Case e00-sp09aa.sav (Without GI-0503)

```
E00-SP09AA.SAV;SUMMER;PK LD;SYSTEM INTACT           :
ND=1259,MH=1380,MW=871,OHMH=0,OHMP=150,EWTW=-121,BD=167


                    P O W E R   F L O W   S U M M A R Y
-------------------------------------------------------------------------------
               NDEX:      1259 MW         ECL-ARP:  520 MW
               MHEX:      1380 MW         PRI-BYN:  350 MW
               MWSI:       871 MW         AHD-GPK:  388 MW
                                          NI-WUMS:  261 MW
               COOPER S:   552 MW         WNE-WKS:  353 MW
               FTCAL S:    400 MW         GGS:     1381 MW
               GRIS-LNC:   230 MW         QC WEST:  647 MW

           LOAD LEVELS AS PERCENT OF 2009 SUMMER PEAK:
           NORTH DAKOTA (ZONE 90,990) 3178.6 MW, 108.7% OF  2925.0 MW
           NSP             (AREA 600)  9647.7 MW, 100.2% OF  9632.0 MW
           MAN HYDRO       (AREA 667) 2964.0 MW, 100.0% OF  2964.0 MW

Load/Losses   MW  / MW       Generation        MW       Export            MW
----------- ------ -----     --------------- ------     --------------- ------
Manitoba      2963/ 267      MH total gross    4780     SPARE                0
Ont. total   23241/ 567         Wpg River       534     SPARE                0
     NW          0/   0         7 Sisters       165     SPARE                0
Sask.         3084/ 103      OH total gross   23417     East Bias          236
MP            2200/ 107         northwest         0     SPC>WAPA (B10T)    167
NSP           9647/ 293      SPC total gross   3189     MH>SPC  (3-230)    230
N. Dakota     3178/ 312      MP total gross    2080     MH>SPC  (FALLS)    -63
Manitoba       688 MVARS     ND Cfd AC gross   3277     OH>MH  @Kenora       0
Ont. total   13541 MVARS              net      3107     OH>MP  @Ft Fran    150
     NW          0 MVARS     NSP East gross    2377     OH E>W @Wawa      -121
Sask.          725 MVARS              net      2284     OH>East USA          0
MP             594 MVARS         West gross    2638     F601C  @Forbes     800
NSP           1624 MVARS              net      2495     D602F  @Dorsey    1140
N. Dakota      686 MVARS         Total net     9306     L20D   @Letell     230
                                WAPA SD Hydro        0     R50M   @Richer      97
                                Pleasant Valley    422     G82R   @Glenboro   -87
                                LGS/Trimont        246
                                SW MN Wind         825
                                Swing Bus         3413


Tfmrs          MVA/ Load     Ph Shifters  Deg/  MW      DC Lines          MW
------------- ---- -----     ------------ --- -----     --------------- ------
Wshell #1 7-7   43/  29%     Stinson        0/  110     CU (1,2)         1104
Wshell #2 7-7   43/  29%     Boundary Dam  35/  168     SQ BU (3,4)       455
Drayton#1 4-7   56/  40%     Whiteshell    -6/    1     MH Bipole 1      1406
Drayton#2 4-7   71/  38%     Int Falls     -6/  149     MH Bipole 2      1592
Dorsey #1 2-4  533/  44%     St. Lawrence  16/    0     MH (BP1+BP2)     2998
Dorsey #2 2-4  621/  51%                                Miles City E>W    200
Forbes    2-4  163/  24%                                RCDC (15)         199
                                                        Stegall (10)        0

Dorsey SC's       I/S  MVAR  Qmax/ Qmin    SVC's              MVAR  Qmax/ Qmin
----------------- --- -----  ---- -----    ----------------- -----  ---- -----
MIL 7-9G     17.0  2    363   600/ -330    Forbes        500   -23   400/ -450
SCE 1-3G     18.2  3    296   480/ -240    Fargo        13.2   -22    20/ -135
SCA 4-6G     18.2  3    296   480/ -240    Watertown    20.0    22   125/  -86
                        -----  ---- -----
       Total            957  1560/ -810    Series Caps       Num In Serv
       Margin           603                ----------------- -----------
                                           Roseau        500   2 of 2
                                           Chisago       500   1 of 1


Caps/Reactors       MVAR   Caps/Reactors       MVAR   Caps/Reactors       MVAR
------------------ -----   ------------------ -----   ------------------ -----
Balta     (FS) 230     0   Arrowhead      230   120   Chisago T  9  34.5    25
```

Drayton	115	40	Blackberry	230	47	Chisago T 10	34.5	25
Drayton	13.8	0	Minntac	115	45	Forbes	230	0
Eau Claire(FS)	161	267	Riverton	230	47	Forbes	500	300
Kohlman Lake	115	240	Roseau Co.(FS)	230	30			0
Parkers Lk(FS)	115	0	Running (FS)	230	30	Fargo	115	81
Prairie (FS)	115	80	Running react	230	-20	Watertown	20	20
Ramsey (FS)	230	0	Shannon	230	0	Watertown	230	0
Red Rock	115	240			0			0
Rugby	13.8	-25	Glenboro	230	0			0
Split Rock(FS)	115	0	Laverendrye	110	98			0
Sheyenne (FS)	115	120	Richer react	230	0			0
Wilton/Bemidji	115	43	St Vital	110	98			0

Bus Voltages		V,pu	Bus Voltages		V,pu	Bus Voltages		V,kV
Adams	345	1.028	Arrowhead	230	1.013	Whiteshell	110	119.1
Alexandria	115	1.049	Badoura	115	1.001	Kenora	220	249.0
Audubon	115	1.018	Blackberry	230	1.030	Dryden	220	252.5
Bemidji	115	1.009	Boise Cascade	13.8	1.027	Fort Frances	220	252.1
Byron	345	1.036	Boise Cascade	115	1.016	Mackenzie	220	253.5
Chisago Co.	345	1.035	ETCO	115	1.011	Lakehead	220	239.7
Chisago Co.	500	1.036	Forbes	230	1.030	Marathon	220	240.9
Drayton	230	1.021	Forbes	500	1.035	Wawa	220	238.4
Eau Claire	345	1.016	Hubbard	115	0.985	Mississagi	220	243.4
WEST FARIBAULT	115	1.039	Intl Falls	115	1.018	Fort Frances	118	120.2
LaPorte	115	0.998	Minntac	115	1.017	Lakehead	118	124.2
Maple River	230	1.020	Moranville	230	1.027	Birch	118	120.4
Marshall Tap	115	1.012	Riverton	230	1.014	Marathon	118	125.6
Owatonna	161	1.013	Running	230	1.022			0.0
Prairie	115	1.025	Shannon	230	1.023			0.0
Prairie	230	1.016			0.000			0.0
Ramsey	230	0.992	Groton	345	1.027			0.0
Roseau County	230	1.029	Watertown	230	1.030			0.0
Roseau County	500	1.063	Watertown	345	1.032			0.0
Sheyenne	230	1.025			0.000			0.0
Thief R Falls	115	1.003	Dorsey	230	1.045			0.0
Tioga	230	1.033	Dorsey	500	1.033			0.0
Wahpeton	230	0.999			0.000			0.0
Winger	115	1.024			0.000			0.0

Steady State Relay Margins (measured from inner blinder)

Relay Location	Manuf/Type	PSS Model	South	North	Em North
1) B10T-Tioga (South)	GE OST	SLLP	332%	N/A	N/A
2) -Tioga (North)	GE OST	SLLP	683%	N/A	N/A
3) -Tioga (Em North)	GE OST	SLLP		N/A	N/A
4) D602F-Dorsey	ATP ???	SLINOS	822%	N/A	N/A
5) -Forbes (Normal)	ATP ???	SLINOS	524%	N/A	N/A
6) -Forbes (Em Nrth)	APT S-PRO	SLINOS		N/A	N/A
8) F3M-Intl Falls	APT S-PRO	SLINOS	330%	N/A	N/A
9) G82R-Rugby	APT	SLINOS	N/A	647%	
10) L20D-Drayton (Normal)	APT, ASEA	SLINOS	894%	N/A	N/A
11) -Drayton (Em Nrth)	ASEA RXZF2	SLINOS		N/A	N/A
12) R50M-Moranville (Norm)	APT, West	SLINOS	1411%	N/A	N/A
13) -Moranville (Em N)	ASEA RXZF2	SLINOS		N/A	N/A

Appendix B.2: Summary for Case e01-sp09aa.sav (With 100 MW GI-0503)

```
E01-SP09AA.SAV;SUMMER;PK LD;SYSTEM INTACT           :
ND=1345,MH=1382,MW=892,OHMH=0,OHMP=150,EWTW=-120,BD=167


                    P O W E R   F L O W   S U M M A R Y
-------------------------------------------------------------------------------
               NDEX:      1345 MW         ECL-ARP:  529 MW
               MHEX:      1382 MW         PRI-BYN:  362 MW
               MWSI:       892 MW         AHD-GPK:  395 MW
                                          NI-WUMS:  260 MW
               COOPER S:   568 MW         WNE-WKS:  357 MW
               FTCAL S:    410 MW         GGS:     1385 MW
               GRIS-LNC:   238 MW         QC WEST:  636 MW

           LOAD LEVELS AS PERCENT OF 2009 SUMMER PEAK:
           NORTH DAKOTA (ZONE 90,990) 3178.6 MW, 108.7% OF  2925.0 MW
           NSP             (AREA 600)  9647.7 MW, 100.2% OF  9632.0 MW
           MAN HYDRO       (AREA 667) 2964.0 MW, 100.0% OF  2964.0 MW

Load/Losses   MW  / MW       Generation        MW       Export            MW
----------- ------ -----     --------------- ------     --------------- ------
Manitoba      2963/ 267      MH total gross    4780     SPARE                0
Ont. total   23241/ 567         Wpg River       534     SPARE                0
     NW          0/   0         7 Sisters       165     SPARE                0
Sask.         3084/ 103      OH total gross   23417     East Bias          245
MP            2200/ 108         northwest         0     SPC>WAPA (B10T)    167
NSP           9647/ 297      SPC total gross   3189     MH>SPC  (3-230)    229
N. Dakota     3178/ 325      MP total gross    2080     MH>SPC  (FALLS)    -63
Manitoba       688 MVARS     ND Cfd AC gross   3277     OH>MH  @Kenora       0
Ont. total   13541 MVARS              net      3107     OH>MP  @Ft Fran    150
     NW          0 MVARS     NSP East gross    2377     OH E>W @Wawa      -120
Sask.          725 MVARS              net      2284     OH>East USA          0
MP             594 MVARS         West gross    2638     F601C  @Forbes     814
NSP           1624 MVARS              net      2495     D602F  @Dorsey    1157
N. Dakota      686 MVARS         Total net     9306     L20D   @Letell     225
                              WAPA SD Hydro        0     R50M   @Richer      98
                              Pleasant Valley    422     G82R   @Glenboro   -98
                              LGS/Trimont        246
                              SW MN Wind         825
                              Swing Bus         3446


Tfmrs          MVA/ Load     Ph Shifters  Deg/  MW      DC Lines          MW
------------- ---- -----     ------------ --- -----     --------------- ------
Wshell #1 7-7   42/  29%     Stinson        0/  110     CU (1,2)         1104
Wshell #2 7-7   42/  29%     Boundary Dam  37/  167     SQ BU (3,4)       455
Drayton#1 4-7   55/  39%     Whiteshell    -3/    0     MH Bipole 1      1406
Drayton#2 4-7   71/  38%     Int Falls     -4/  150     MH Bipole 2      1592
Dorsey #1 2-4  540/  45%     St. Lawrence  16/    0     MH (BP1+BP2)     2998
Dorsey #2 2-4  629/  52%                                Miles City E>W    200
Forbes    2-4  164/  24%                                RCDC (15)         200
                                                        Stegall (10)        0

Dorsey SC's       I/S  MVAR  Qmax/ Qmin    SVC's              MVAR  Qmax/ Qmin
---------------- --- -----  ---- -----    ---------------- -----  ---- -----
MIL 7-9G     17.0  2    367   600/ -330    Forbes        500   -10   400/ -450
SCE 1-3G     18.2  3    299   480/ -240    Fargo        13.2   -12    20/ -135
SCA 4-6G     18.2  3    299   480/ -240    Watertown    20.0    30   125/  -86
                        -----  ---- -----
       Total            966  1560/ -810    Series Caps       Num In Serv
       Margin           594                ---------------- -----------
                                           Roseau        500   2 of 2
                                           Chisago       500   1 of 1


Caps/Reactors       MVAR   Caps/Reactors       MVAR   Caps/Reactors       MVAR
------------------ -----   ------------------ -----   ------------------ -----
Balta     (FS) 230     0   Arrowhead      230   120   Chisago T  9  34.5    25
```

Drayton	115	40	Blackberry	230	47	Chisago T 10	34.5	25
Drayton	13.8	0	Minntac	115	45	Forbes	230	0
Eau Claire(FS)	161	267	Riverton	230	47	Forbes	500	300
Kohlman Lake	115	240	Roseau Co.(FS)	230	30			0
Parkers Lk(FS)	115	0	Running (FS)	230	30	Fargo	115	81
Prairie (FS)	115	80	Running react	230	-20	Watertown	20	20
Ramsey (FS)	230	0	Shannon	230	0	Watertown	230	0
Red Rock	115	240			0			0
Rugby	13.8	-25	Glenboro	230	0			0
Split Rock(FS)	115	0	Laverendrye	110	98			0
Sheyenne (FS)	115	120	Richer react	230	0			0
Wilton/Bemidji	115	43	St Vital	110	98			0

Bus Voltages		V,pu	Bus Voltages		V,pu	Bus Voltages		V,kV
Adams	345	1.027	Arrowhead	230	1.012	Whiteshell	110	119.1
Alexandria	115	1.047	Badoura	115	1.000	Kenora	220	249.0
Audubon	115	1.016	Blackberry	230	1.030	Dryden	220	252.4
Bemidji	115	1.008	Boise Cascade	13.8	1.026	Fort Frances	220	252.1
Byron	345	1.036	Boise Cascade	115	1.016	Mackenzie	220	253.5
Chisago Co.	345	1.035	ETCO	115	1.011	Lakehead	220	239.7
Chisago Co.	500	1.036	Forbes	230	1.030	Marathon	220	241.0
Drayton	230	1.019	Forbes	500	1.035	Wawa	220	238.4
Eau Claire	345	1.014	Hubbard	115	0.983	Mississagi	220	243.5
WEST FARIBAULT	115	1.038	Intl Falls	115	1.017	Fort Frances	118	120.2
LaPorte	115	0.997	Minntac	115	1.017	Lakehead	118	124.2
Maple River	230	1.017	Moranville	230	1.026	Birch	118	120.4
Marshall Tap	115	1.011	Riverton	230	1.013	Marathon	118	125.7
Owatonna	161	1.012	Running	230	1.021			0.0
Prairie	115	1.022	Shannon	230	1.022			0.0
Prairie	230	1.012			0.000			0.0
Ramsey	230	0.985	Groton	345	1.026			0.0
Roseau County	230	1.028	Watertown	230	1.030			0.0
Roseau County	500	1.063	Watertown	345	1.031			0.0
Sheyenne	230	1.023			0.000			0.0
Thief R Falls	115	1.000	Dorsey	230	1.045			0.0
Tioga	230	1.032	Dorsey	500	1.033			0.0
Wahpeton	230	0.997			0.000			0.0
Winger	115	1.022			0.000			0.0

Steady State Relay Margins (measured from inner blinder)

Relay Location	Manuf/Type	PSS Model	South	North	Em North
1) B10T-Tioga (South)	GE OST	SLLP	333%	N/A	N/A
2) -Tioga (North)	GE OST	SLLP	685%	N/A	N/A
3) -Tioga (Em North)	GE OST	SLLP		N/A	N/A
4) D602F-Dorsey	ATP ???	SLINOS	804%	N/A	N/A
5) -Forbes (Normal)	ATP ???	SLINOS	513%	N/A	N/A
6) -Forbes (Em Nrth)	APT S-PRO	SLINOS		N/A	N/A
8) F3M-Intl Falls	APT S-PRO	SLINOS	329%	N/A	N/A
9) G82R-Rugby	APT	SLINOS	N/A	577%	
10) L20D-Drayton (Normal)	APT, ASEA	SLINOS	917%	N/A	N/A
11) -Drayton (Em Nrth)	ASEA RXZF2	SLINOS		N/A	N/A
12) R50M-Moranville (Norm)	APT, West	SLINOS	1385%	N/A	N/A
13) -Moranville (Em N)	ASEA RXZF2	SLINOS		N/A	N/A

Appendix B.3: Summary for Case e02-sp09aa.sav (With 125 MW GI-0503)

```
E02-SP09AA.SAV;SUMMER;PK LD;SYSTEM INTACT           :
ND=1365,MH=1382,MW=897,OHMH=0,OHMP=150,EWTW=-120,BD=166


                    P O W E R   F L O W   S U M M A R Y
-------------------------------------------------------------------------------
               NDEX:      1365 MW         ECL-ARP:  532 MW
               MHEX:      1382 MW         PRI-BYN:  364 MW
               MWSI:       897 MW         AHD-GPK:  397 MW
                                          NI-WUMS:  260 MW
               COOPER S:   572 MW         WNE-WKS:  358 MW
               FTCAL S:    413 MW         GGS:     1386 MW
               GRIS-LNC:   240 MW         QC WEST:  634 MW

           LOAD LEVELS AS PERCENT OF 2009 SUMMER PEAK:
           NORTH DAKOTA (ZONE 90,990) 3178.6 MW, 108.7% OF  2925.0 MW
           NSP             (AREA 600)  9647.7 MW, 100.2% OF  9632.0 MW
           MAN HYDRO       (AREA 667) 2964.0 MW, 100.0% OF  2964.0 MW

Load/Losses   MW  / MW       Generation        MW       Export            MW
----------- ------ -----     --------------- ------     --------------- ------
Manitoba      2963/ 266      MH total gross    4780     SPARE                0
Ont. total   23241/ 567         Wpg River       534     SPARE                0
     NW          0/   0         7 Sisters       165     SPARE                0
Sask.         3084/ 103      OH total gross   23417     East Bias          247
MP            2200/ 108         northwest         0     SPC>WAPA (B10T)    166
NSP           9647/ 298      SPC total gross   3189     MH>SPC  (3-230)    229
N. Dakota     3178/ 328      MP total gross    2080     MH>SPC  (FALLS)    -63
Manitoba       688 MVARS     ND Cfd AC gross   3277     OH>MH  @Kenora       0
Ont. total   13541 MVARS              net      3107     OH>MP  @Ft Fran    150
     NW          0 MVARS     NSP East gross    2377     OH E>W @Wawa      -120
Sask.          725 MVARS              net      2284     OH>East USA          0
MP             594 MVARS         West gross    2638     F601C  @Forbes     817
NSP           1624 MVARS              net      2495     D602F  @Dorsey    1160
N. Dakota      686 MVARS         Total net     9306     L20D   @Letell     224
                              WAPA SD Hydro        0     R50M   @Richer      99
                              Pleasant Valley    422     G82R   @Glenboro  -100
                              LGS/Trimont        246
                              SW MN Wind         825
                              Swing Bus         3455


Tfmrs          MVA/ Load     Ph Shifters  Deg/  MW      DC Lines          MW
------------- ---- -----     ------------ --- -----     --------------- ------
Wshell #1 7-7   42/  29%     Stinson        0/  110     CU (1,2)         1103
Wshell #2 7-7   42/  29%     Boundary Dam  38/  167     SQ BU (3,4)       455
Drayton#1 4-7   55/  39%     Whiteshell    -3/    0     MH Bipole 1      1406
Drayton#2 4-7   71/  38%     Int Falls     -4/  149     MH Bipole 2      1592
Dorsey #1 2-4  542/  45%     St. Lawrence  16/    0     MH (BP1+BP2)     2998
Dorsey #2 2-4  630/  52%                                Miles City E>W    200
Forbes    2-4  164/  24%                                RCDC (15)         199
                                                        Stegall (10)        0

Dorsey SC's       I/S  MVAR  Qmax/ Qmin    SVC's              MVAR  Qmax/ Qmin
---------------- --- -----  ---- -----    ---------------- -----  ---- -----
MIL 7-9G     17.0  2    367   600/ -330    Forbes        500    -8   400/ -450
SCE 1-3G     18.2  3    300   480/ -240    Fargo        13.2   -10    20/ -135
SCA 4-6G     18.2  3    300   480/ -240    Watertown    20.0    32   125/  -86
                        -----  ---- -----
       Total            968  1560/ -810    Series Caps       Num In Serv
       Margin           592                ---------------- -----------
                                           Roseau        500   2 of 2
                                           Chisago       500   1 of 1


Caps/Reactors       MVAR   Caps/Reactors       MVAR   Caps/Reactors       MVAR
------------------ -----   ------------------ -----   ------------------ -----
Balta     (FS) 230     0   Arrowhead      230   120   Chisago T  9  34.5    25
```

Drayton	115	40	Blackberry	230	47	Chisago T 10	34.5	25
Drayton	13.8	0	Minntac	115	45	Forbes	230	0
Eau Claire(FS)	161	267	Riverton	230	47	Forbes	500	300
Kohlman Lake	115	240	Roseau Co.(FS)	230	30			0
Parkers Lk(FS)	115	0	Running (FS)	230	30	Fargo	115	81
Prairie (FS)	115	80	Running react	230	-20	Watertown	20	20
Ramsey (FS)	230	0	Shannon	230	0	Watertown	230	0
Red Rock	115	240			0			0
Rugby	13.8	-25	Glenboro	230	0			0
Split Rock(FS)	115	0	Laverendrye	110	98			0
Sheyenne (FS)	115	120	Richer react	230	0			0
Wilton/Bemidji	115	43	St Vital	110	98			0

Bus Voltages		V,pu	Bus Voltages		V,pu	Bus Voltages		V,kV
Adams	345	1.027	Arrowhead	230	1.012	Whiteshell	110	119.1
Alexandria	115	1.047	Badoura	115	0.999	Kenora	220	249.0
Audubon	115	1.015	Blackberry	230	1.030	Dryden	220	252.4
Bemidji	115	1.008	Boise Cascade	13.8	1.026	Fort Frances	220	252.1
Byron	345	1.036	Boise Cascade	115	1.016	Mackenzie	220	253.5
Chisago Co.	345	1.035	ETCO	115	1.010	Lakehead	220	239.7
Chisago Co.	500	1.036	Forbes	230	1.030	Marathon	220	241.0
Drayton	230	1.019	Forbes	500	1.035	Wawa	220	238.4
Eau Claire	345	1.014	Hubbard	115	0.983	Mississagi	220	243.5
WEST FARIBAULT	115	1.038	Intl Falls	115	1.017	Fort Frances	118	120.2
LaPorte	115	0.997	Minntac	115	1.017	Lakehead	118	124.2
Maple River	230	1.016	Moranville	230	1.026	Birch	118	120.4
Marshall Tap	115	1.011	Riverton	230	1.012	Marathon	118	125.7
Owatonna	161	1.012	Running	230	1.021			0.0
Prairie	115	1.022	Shannon	230	1.022			0.0
Prairie	230	1.012			0.000			0.0
Ramsey	230	0.987	Groton	345	1.026			0.0
Roseau County	230	1.028	Watertown	230	1.030			0.0
Roseau County	500	1.063	Watertown	345	1.031			0.0
Sheyenne	230	1.022			0.000			0.0
Thief R Falls	115	1.000	Dorsey	230	1.045			0.0
Tioga	230	1.031	Dorsey	500	1.033			0.0
Wahpeton	230	0.997			0.000			0.0
Winger	115	1.022			0.000			0.0

Steady State Relay Margins (measured from inner blinder)

Relay Location	Manuf/Type	PSS Model	South	North	Em North
1) B10T-Tioga (South)	GE OST	SLLP	332%	N/A	N/A
2) -Tioga (North)	GE OST	SLLP	684%	N/A	N/A
3) -Tioga (Em North)	GE OST	SLLP		N/A	N/A
4) D602F-Dorsey	ATP ???	SLINOS	801%	N/A	N/A
5) -Forbes (Normal)	ATP ???	SLINOS	511%	N/A	N/A
6) -Forbes (Em Nrth)	APT S-PRO	SLINOS		N/A	N/A
8) F3M-Intl Falls	APT S-PRO	SLINOS	329%	N/A	N/A
9) G82R-Rugby	APT	SLINOS	N/A	564%	
10) L20D-Drayton (Normal)	APT, ASEA	SLINOS	923%	N/A	N/A
11) -Drayton (Em Nrth)	ASEA RXZF2	SLINOS		N/A	N/A
12) R50M-Moranville (Norm)	APT, West	SLINOS	1380%	N/A	N/A
13) -Moranville (Em N)	ASEA RXZF2	SLINOS		N/A	N/A

Appendix B.4: Summary for Case k00-sp15aa.sav (Without GI-0503)

```
INITIATED AT LOAD FLOW ENTRY POINT ON WED, MAR 05 2008  11:22

K00-SP15AA.SAV;SUMMER;PK LD;SYSTEM INTACT           :
ND=353,MH=1260,MW=-338,OHMH=0,OHMP=150,EWTW=-120,BD=-167


                    P O W E R   F L O W   S U M M A R Y
-----------------------------------------------------------------------------
               NDEX:       353 MW         ECL-ARP:  -54 MW
               MHEX:      1260 MW         PRI-BYN: -283 MW
               MWSI:      -338 MW         AHD-GPK:  111 MW
                                          NI-WUMS:  341 MW
               COOPER S:  -199 MW         WNE-WKS:  181 MW
               FTCAL S:    -61 MW         GGS:     1280 MW
               GRIS-LNC:    40 MW         QC WEST: 1121 MW

           LOAD LEVELS AS PERCENT OF 2015 SUMMER PEAK:
           NORTH DAKOTA (ZONE 90,990) 3554.2 MW, 109.3% OF  3251.0 MW
           NSP             (AREA 600) 11888.3 MW, 100.1% OF  11875.0 MW
           MAN HYDRO       (AREA 667) 3076.0 MW, 100.0% OF  3076.0 MW

Load/Losses   MW  / MW       Generation        MW       Export            MW
----------- ------ -----     --------------- ------     --------------- ------
Manitoba      3075/ 275      MH total gross    4780     SPARE                0
Ont. total   23241/ 566         Wpg River       534     SPARE                0
     NW          0/   0         7 Sisters       165     SPARE                0
Sask.         3084/ 105      OH total gross   23417     East Bias          148
MP            2200/ 104         northwest         0     SPC>WAPA (B10T)   -167
NSP          11888/ 335      SPC total gross   2854     MH>SPC  (3-230)    231
N. Dakota     3554/ 330      MP total gross    2080     MH>SPC  (FALLS)    -63
Manitoba       714 MVARS     ND Cfd AC gross   3197     OH>MH  @Kenora       0
Ont. total   13541 MVARS               net      3027     OH>MP  @Ft Fran    150
     NW          0 MVARS     NSP East gross    2373     OH E>W @Wawa      -120
Sask.          725 MVARS               net      2259     OH>East USA          0
MP             594 MVARS         West gross    2638     F601C  @Forbes     694
NSP           2000 MVARS               net      2462     D602F  @Dorsey     910
N. Dakota      766 MVARS         Total net     9211     L20D   @Letell     278
                              WAPA SD Hydro        0     R50M   @Richer      70
                              Pleasant Valley    422     G82R   @Glenboro     0
                              LGS/Trimont        246
                              SW MN Wind         825
                              Swing Bus         3264


Tfmrs          MVA/ Load     Ph Shifters  Deg/  MW      DC Lines          MW
------------- ---- -----     ------------ --- -----     --------------- ------
Wshell #1 7-7   42/  29%     Stinson       -9/  110     CU (1,2)         1104
Wshell #2 7-7   42/  29%     Boundary Dam -35/ -166     SQ BU (3,4)       455
Drayton#1 4-7   62/  44%     Whiteshell   -94/    0     MH Bipole 1      1406
Drayton#2 4-7   79/  42%     Int Falls    -86/  150     MH Bipole 2      1592
Dorsey #1 2-4  435/  36%     St. Lawrence  16/    0     MH (BP1+BP2)     2998
Dorsey #2 2-4  523/  43%                                Miles City E>W    200
Forbes    2-4  110/  16%                                RCDC (15)         200
                                                        Stegall (10)        0

Dorsey SC's       I/S  MVAR  Qmax/ Qmin    SVC's              MVAR  Qmax/ Qmin
----------------- --- -----  ---- -----    ----------------- -----  ---- -----
MIL 7-9G     17.0  2    329   600/ -330    Forbes        500   -19   400/ -450
SCE 1-3G     18.2  3    268   480/ -240    Fargo        13.2   -21    20/ -135
SCA 4-6G     18.2  3    268   480/ -240    Watertown    20.0    -2   125/  -86
                        -----  ---- -----
       Total            866  1560/ -810    Series Caps       Num In Serv
       Margin           694                ----------------- -----------
                                           Roseau        500   2 of 2
                                           Chisago       500   1 of 1
```

Caps/Reactors	MVAR	Caps/Reactors	MVAR	Caps/Reactors	MVAR
Balta (FS) 230	60	Arrowhead 230	80	Chisago T 9 34.5	25
Drayton 115	40	Blackberry 230	47	Chisago T 10 34.5	25
Drayton 13.8	0	Minntac 115	45	Forbes 230	0
Eau Claire(FS) 161	267	Riverton 230	47	Forbes 500	300
Kohlman Lake 115	240	Roseau Co.(FS) 230	30		0
Parkers Lk(FS) 115	0	Running (FS) 230	30	Fargo 115	81
Prairie (FS) 115	120	Running react 230	-20	Watertown 20	20
Ramsey (FS) 230	0	Shannon 230	0	Watertown 230	0
Red Rock 115	240		0		0
Rugby 13.8	-25	Glenboro 230	0		0
Split Rock(FS) 115	0	Laverendrye 110	98		0
Sheyenne (FS) 115	120	Richer react 230	0		0
Wilton/Bemidji 115	66	St Vital 110	98		0

Bus Voltages	V,pu	Bus Voltages	V,pu	Bus Voltages	V,kV
Adams 345	1.014	Arrowhead 230	1.030	Whiteshell 110	119.1
Alexandria 115	0.989	Badoura 115	1.004	Kenora 220	249.0
Audubon 115	1.010	Blackberry 230	1.036	Dryden 220	252.5
Bemidji 115	1.026	Boise Cascade 13.8	1.030	Fort Frances 220	252.1
Byron 345	1.029	Boise Cascade 115	1.019	Mackenzie 220	253.6
Chisago Co. 345	1.042	ETCO 115	1.021	Lakehead 220	239.7
Chisago Co. 500	1.044	Forbes 230	1.043	Marathon 220	241.2
Drayton 230	1.021	Forbes 500	1.050	Wawa 220	238.3
Eau Claire 345	1.038	Hubbard 115	0.987	Mississagi 220	242.9
WEST FARIBAULT 115	1.011	Intl Falls 115	1.021	Fort Frances 118	120.2
LaPorte 115	1.005	Minntac 115	1.026	Lakehead 118	124.2
Maple River 230	1.019	Moranville 230	1.034	Birch 118	120.4
Marshall Tap 115	1.019	Riverton 230	1.011	Marathon 118	124.0
Owatonna 161	0.990	Running 230	1.029		0.0
Prairie 115	1.047	Shannon 230	1.031		0.0
Prairie 230	1.030		0.000		0.0
Ramsey 230	1.008	Groton 345	1.025		0.0
Roseau County 230	1.036	Watertown 230	1.030		0.0
Roseau County 500	1.071	Watertown 345	1.032		0.0
Sheyenne 230	1.025		0.000		0.0
Thief R Falls 115	1.016	Dorsey 230	1.045		0.0
Tioga 230	0.982	Dorsey 500	1.039		0.0
Wahpeton 230	0.987		0.000		0.0
Winger 115	1.031		0.000		0.0

Steady State Relay Margins (measured from inner blinder)

Relay Location	Manuf/Type	PSS Model	South	North	Em North
1) B10T-Tioga (South)	GE OST	SLLP	N/A		
2) -Tioga (North)	GE OST	SLLP	N/A	469%	
3) -Tioga (Em North)	GE OST	SLLP	N/A		386%
4) D602F-Dorsey	ATP ???	SLINOS	1128%	N/A	N/A
5) -Forbes (Normal)	ATP ???	SLINOS	730%	N/A	N/A
6) -Forbes (Em Nrth)	APT S-PRO	SLINOS		N/A	N/A
8) F3M-Intl Falls	APT S-PRO	SLINOS	328%	N/A	N/A
9) G82R-Rugby	APT	SLINOS	208%	N/A	N/A
10) L20D-Drayton (Normal)	APT, ASEA	SLINOS	696%	N/A	N/A
11) -Drayton (Em Nrth)	ASEA RXZF2	SLINOS		N/A	N/A
12) R50M-Moranville (Norm)	APT, West	SLINOS	1984%	N/A	N/A
13) -Moranville (Em N)	ASEA RXZF2	SLINOS		N/A	N/A

Appendix B.5: Summary for Case k02-sp15aa.sav (With 125 MW GI-0503)

```
INITIATED AT LOAD FLOW ENTRY POINT ON WED, MAR 05 2008  11:45

K02-SP15AA.SAV;SUMMER;PK LD;SYSTEM INTACT           :
ND=471,MH=1261,MW=-308,OHMH=0,OHMP=150,EWTW=-120,BD=-167


                    P O W E R   F L O W   S U M M A R Y
-----------------------------------------------------------------------------
               NDEX:       471 MW         ECL-ARP:  -39 MW
               MHEX:      1261 MW         PRI-BYN: -268 MW
               MWSI:      -308 MW         AHD-GPK:  122 MW
                                          NI-WUMS:  338 MW
               COOPER S:  -171 MW         WNE-WKS:  188 MW
               FTCAL S:    -45 MW         GGS:     1286 MW
               GRIS-LNC:    53 MW         QC WEST: 1104 MW

           LOAD LEVELS AS PERCENT OF 2015 SUMMER PEAK:
           NORTH DAKOTA (ZONE 90,990) 3554.2 MW, 109.3% OF  3251.0 MW
           NSP             (AREA 600) 11888.3 MW, 100.1% OF  11875.0 MW
           MAN HYDRO       (AREA 667) 3076.0 MW, 100.0% OF  3076.0 MW

Load/Losses   MW  / MW       Generation        MW       Export            MW
----------- ------ -----     --------------- ------     --------------- ------
Manitoba      3075/ 274      MH total gross    4780     SPARE                0
Ont. total   23241/ 566         Wpg River       534     SPARE                0
     NW          0/   0         7 Sisters       165     SPARE                0
Sask.         3084/ 105      OH total gross   23417     East Bias          161
MP            2200/ 104         northwest         0     SPC>WAPA (B10T)   -167
NSP          11888/ 336      SPC total gross   2854     MH>SPC  (3-230)    231
N. Dakota     3554/ 336      MP total gross    2080     MH>SPC  (FALLS)    -63
Manitoba       714 MVARS     ND Cfd AC gross   3197     OH>MH  @Kenora       0
Ont. total   13541 MVARS               net      3027     OH>MP  @Ft Fran    150
     NW          0 MVARS     NSP East gross    2373     OH E>W @Wawa      -120
Sask.          725 MVARS               net      2259     OH>East USA          0
MP             594 MVARS         West gross    2638     F601C  @Forbes     712
NSP           2000 MVARS               net      2462     D602F  @Dorsey     931
N. Dakota      766 MVARS         Total net     9211     L20D   @Letell     271
                              WAPA SD Hydro        0     R50M   @Richer      72
                              Pleasant Valley    422     G82R   @Glenboro   -13
                              LGS/Trimont        246
                              SW MN Wind         825
                              Swing Bus         3243


Tfmrs          MVA/ Load     Ph Shifters  Deg/  MW      DC Lines          MW
------------- ---- -----     ------------ --- -----     --------------- ------
Wshell #1 7-7   43/  29%     Stinson       -8/  110     CU (1,2)         1104
Wshell #2 7-7   42/  29%     Boundary Dam -32/ -166     SQ BU (3,4)       455
Drayton#1 4-7   61/  44%     Whiteshell   -90/    0     MH Bipole 1      1406
Drayton#2 4-7   78/  42%     Int Falls    -84/  150     MH Bipole 2      1592
Dorsey #1 2-4  443/  36%     St. Lawrence  16/    0     MH (BP1+BP2)     2998
Dorsey #2 2-4  531/  44%                                Miles City E>W    200
Forbes    2-4  110/  16%                                RCDC (15)         200
                                                        Stegall (10)        0

Dorsey SC's       I/S  MVAR  Qmax/ Qmin    SVC's              MVAR  Qmax/ Qmin
----------------- --- -----  ---- -----    ----------------- -----  ---- -----
MIL 7-9G     17.0  2    331   600/ -330    Forbes        500   -17   400/ -450
SCE 1-3G     18.2  3    270   480/ -240    Fargo        13.2   -13    20/ -135
SCA 4-6G     18.2  3    270   480/ -240    Watertown    20.0     2   125/  -86
                        -----  ---- -----
       Total            873  1560/ -810    Series Caps       Num In Serv
       Margin           687                ----------------- -----------
                                           Roseau        500   2 of 2
                                           Chisago       500   1 of 1
```

Caps/Reactors		MVAR
Balta (FS)	230	60
Drayton	115	40
Drayton	13.8	0
Eau Claire(FS)	161	267
Kohlman Lake	115	240
Parkers Lk(FS)	115	0
Prairie (FS)	115	120
Ramsey (FS)	230	0
Red Rock	115	240
Rugby	13.8	-25
Split Rock(FS)	115	0
Sheyenne (FS)	115	120
Wilton/Bemidji	115	66

Caps/Reactors		MVAR
Arrowhead	230	80
Blackberry	230	47
Minntac	115	45
Riverton	230	47
Roseau Co.(FS)	230	30
Running (FS)	230	30
Running react	230	-20
Shannon	230	0
		0
Glenboro	230	0
Laverendrye	110	98
Richer react	230	0
St Vital	110	98

Caps/Reactors		MVAR
Chisago T 9	34.5	25
Chisago T 10	34.5	25
Forbes	230	0
Forbes	500	300
		0
Fargo	115	81
Watertown	20	20
Watertown	230	0
		0
		0
		0
		0
		0

Bus Voltages		V,pu
Adams	345	1.015
Alexandria	115	0.988
Audubon	115	1.007
Bemidji	115	1.023
Byron	345	1.029
Chisago Co.	345	1.041
Chisago Co.	500	1.043
Drayton	230	1.021
Eau Claire	345	1.038
WEST FARIBAULT	115	1.011
LaPorte	115	1.004
Maple River	230	1.017
Marshall Tap	115	1.019
Owatonna	161	0.990
Prairie	115	1.044
Prairie	230	1.027
Ramsey	230	1.004
Roseau County	230	1.035
Roseau County	500	1.071
Sheyenne	230	1.023
Thief R Falls	115	1.014
Tioga	230	0.979
Wahpeton	230	0.985
Winger	115	1.029

Bus Voltages		V,pu
Arrowhead	230	1.029
Badoura	115	1.003
Blackberry	230	1.036
Boise Cascade	13.8	1.030
Boise Cascade	115	1.019
ETCO	115	1.021
Forbes	230	1.042
Forbes	500	1.049
Hubbard	115	0.985
Intl Falls	115	1.021
Minntac	115	1.026
Moranville	230	1.034
Riverton	230	1.010
Running	230	1.029
Shannon	230	1.031
		0.000
Groton	345	1.024
Watertown	230	1.030
Watertown	345	1.032
		0.000
Dorsey	230	1.045
Dorsey	500	1.039
		0.000
		0.000

Bus Voltages		V,kV
Whiteshell	110	119.1
Kenora	220	249.0
Dryden	220	252.5
Fort Frances	220	252.1
Mackenzie	220	253.6
Lakehead	220	239.7
Marathon	220	241.2
Wawa	220	238.3
Mississagi	220	242.9
Fort Frances	118	120.2
Lakehead	118	124.2
Birch	118	120.4
Marathon	118	124.0
		0.0
		0.0
		0.0
		0.0
		0.0
		0.0
		0.0
		0.0
		0.0
		0.0

Steady State Relay Margins (measured from inner blinder)

Relay Location	Manuf/Type	PSS Model	South	North	Em North
1) B10T-Tioga (South)	GE OST	SLLP	N/A		
2) -Tioga (North)	GE OST	SLLP	N/A	468%	
3) -Tioga (Em North)	GE OST	SLLP	N/A		384%
4) D602F-Dorsey	ATP ???	SLINOS	1097%	N/A	N/A
5) -Forbes (Normal)	ATP ???	SLINOS	708%	N/A	N/A
6) -Forbes (Em Nrth)	APT S-PRO	SLINOS		N/A	N/A
8) F3M-Intl Falls	APT S-PRO	SLINOS	328%	N/A	N/A
9) G82R-Rugby	APT	SLINOS	N/A	1524%	
10) L20D-Drayton (Normal)	APT, ASEA	SLINOS	721%	N/A	N/A
11) -Drayton (Em Nrth)	ASEA RXZF2	SLINOS		N/A	N/A
12) R50M-Moranville (Norm)	APT, West	SLINOS	1933%	N/A	N/A
13) -Moranville (Em N)	ASEA RXZF2	SLINOS		N/A	N/A

Appendix B.6: Summary for Case k60-sp15aa.sav (Without GI-0503)

```
INITIATED AT LOAD FLOW ENTRY POINT ON TUE, MAR 25 2008  10:16

K60-SP15AA.SAV;SUMMER;PK LD;SYSTEM INTACT           :
ND=358,MH=1262,MW=-336,OHMH=0,OHMP=150,EWTW=-120,BD=-168


                    P O W E R   F L O W   S U M M A R Y
-----------------------------------------------------------------------------
               NDEX:       358 MW         ECL-ARP:  -53 MW
               MHEX:      1262 MW         PRI-BYN: -282 MW
               MWSI:      -336 MW         AHD-GPK:  112 MW
                                          NI-WUMS:  341 MW
               COOPER S:  -197 MW         WNE-WKS:  181 MW
               FTCAL S:    -60 MW         GGS:     1280 MW
               GRIS-LNC:    40 MW         QC WEST: 1120 MW

           LOAD LEVELS AS PERCENT OF 2015 SUMMER PEAK:
           NORTH DAKOTA (ZONE 90,990) 3554.2 MW, 109.3% OF  3251.0 MW
           NSP             (AREA 600) 11888.3 MW, 100.1% OF  11875.0 MW
           MAN HYDRO       (AREA 667) 3076.0 MW, 100.0% OF  3076.0 MW

Load/Losses   MW  / MW       Generation        MW       Export            MW
----------- ------ -----     --------------- ------     --------------- ------
Manitoba      3075/ 275      MH total gross    4780     SPARE                0
Ont. total   23241/ 566         Wpg River       534     SPARE                0
     NW          0/   0         7 Sisters       165     SPARE                0
Sask.         3084/ 105      OH total gross   23417     East Bias          149
MP            2200/ 104         northwest         0     SPC>WAPA (B10T)   -168
NSP          11888/ 335      SPC total gross   2854     MH>SPC  (3-230)    230
N. Dakota     3554/ 323      MP total gross    2080     MH>SPC  (FALLS)    -63
Manitoba       714 MVARS     ND Cfd AC gross   3197     OH>MH  @Kenora       0
Ont. total   13541 MVARS               net      3027     OH>MP  @Ft Fran    150
     NW          0 MVARS     NSP East gross    2373     OH E>W @Wawa      -120
Sask.          725 MVARS               net      2259     OH>East USA          0
MP             594 MVARS         West gross    2638     F601C  @Forbes     697
NSP           2000 MVARS               net      2462     D602F  @Dorsey     913
N. Dakota      766 MVARS         Total net     9211     L20D   @Letell     278
                              WAPA SD Hydro        0     R50M   @Richer      70
                              Pleasant Valley    422     G82R   @Glenboro    -1
                              LGS/Trimont        246
                              SW MN Wind         825
                              Swing Bus         3255


Tfmrs          MVA/ Load     Ph Shifters  Deg/  MW      DC Lines          MW
------------- ---- -----     ------------ --- -----     --------------- ------
Wshell #1 7-7   42/  29%     Stinson       -9/  110     CU (1,2)         1103
Wshell #2 7-7   42/  29%     Boundary Dam -29/ -167     SQ BU (3,4)       455
Drayton#1 4-7   62/  44%     Whiteshell   -93/    0     MH Bipole 1      1406
Drayton#2 4-7   79/  42%     Int Falls    -86/  150     MH Bipole 2      1592
Dorsey #1 2-4  436/  36%     St. Lawrence  16/    0     MH (BP1+BP2)     2998
Dorsey #2 2-4  524/  43%                                Miles City E>W    200
Forbes    2-4  110/  16%                                RCDC (15)         199
                                                        Stegall (10)        0

Dorsey SC's       I/S  MVAR  Qmax/ Qmin    SVC's              MVAR  Qmax/ Qmin
----------------- --- -----  ---- -----    ----------------- -----  ---- -----
MIL 7-9G     17.0  2    329   600/ -330    Forbes        500   -18   400/ -450
SCE 1-3G     18.2  3    268   480/ -240    Fargo        13.2   -21    20/ -135
SCA 4-6G     18.2  3    268   480/ -240    Watertown    20.0    -2   125/  -86
                        -----  ---- -----
       Total            866  1560/ -810    Series Caps       Num In Serv
       Margin           694                ----------------- -----------
                                           Roseau        500   2 of 2
                                           Chisago       500   1 of 1
```

Caps/Reactors		MVAR	Caps/Reactors		MVAR	Caps/Reactors		MVAR
Balta (FS)	230	60	Arrowhead	230	80	Chisago T 9	34.5	25
Drayton	115	40	Blackberry	230	47	Chisago T 10	34.5	25
Drayton	13.8	0	Minntac	115	45	Forbes	230	0
Eau Claire(FS)	161	267	Riverton	230	47	Forbes	500	300
Kohlman Lake	115	240	Roseau Co.(FS)	230	30			0
Parkers Lk(FS)	115	0	Running (FS)	230	30	Fargo	115	81
Prairie (FS)	115	120	Running react	230	-20	Watertown	20	20
Ramsey (FS)	230	0	Shannon	230	0	Watertown	230	0
Red Rock	115	240			0			0
Rugby	13.8	-25	Glenboro	230	0			0
Split Rock(FS)	115	0	Laverendrye	110	98			0
Sheyenne (FS)	115	120	Richer react	230	0			0
Wilton/Bemidji	115	66	St Vital	110	98			0

Bus Voltages		V,pu	Bus Voltages		V,pu	Bus Voltages		V,kV
Adams	345	1.014	Arrowhead	230	1.030	Whiteshell	110	119.1
Alexandria	115	0.990	Badoura	115	1.004	Kenora	220	249.0
Audubon	115	1.010	Blackberry	230	1.036	Dryden	220	252.5
Bemidji	115	1.026	Boise Cascade	13.8	1.030	Fort Frances	220	252.1
Byron	345	1.029	Boise Cascade	115	1.019	Mackenzie	220	253.6
Chisago Co.	345	1.042	ETCO	115	1.021	Lakehead	220	239.7
Chisago Co.	500	1.044	Forbes	230	1.043	Marathon	220	241.2
Drayton	230	1.022	Forbes	500	1.050	Wawa	220	238.3
Eau Claire	345	1.038	Hubbard	115	0.987	Mississagi	220	243.0
WEST FARIBAULT	115	1.011	Intl Falls	115	1.021	Fort Frances	118	120.2
LaPorte	115	1.005	Minntac	115	1.026	Lakehead	118	124.2
Maple River	230	1.020	Moranville	230	1.034	Birch	118	120.4
Marshall Tap	115	1.019	Riverton	230	1.011	Marathon	118	124.0
Owatonna	161	0.990	Running	230	1.029			0.0
Prairie	115	1.047	Shannon	230	1.031			0.0
Prairie	230	1.031			0.000			0.0
Ramsey	230	1.009	Groton	345	1.025			0.0
Roseau County	230	1.036	Watertown	230	1.030			0.0
Roseau County	500	1.071	Watertown	345	1.032			0.0
Sheyenne	230	1.025			0.000			0.0
Thief R Falls	115	1.016	Dorsey	230	1.045			0.0
Tioga	230	1.003	Dorsey	500	1.039			0.0
Wahpeton	230	0.988			0.000			0.0
Winger	115	1.032			0.000			0.0

Steady State Relay Margins (measured from inner blinder)

Relay Location	Manuf/Type	PSS Model	South	North	Em North
1) B10T-Tioga (South)	GE OST	SLLP	N/A		
2) -Tioga (North)	GE OST	SLLP	N/A	517%	
3) -Tioga (Em North)	GE OST	SLLP	N/A		444%
4) D602F-Dorsey	ATP ???	SLINOS	1123%	N/A	N/A
5) -Forbes (Normal)	ATP ???	SLINOS	726%	N/A	N/A
6) -Forbes (Em Nrth)	APT S-PRO	SLINOS		N/A	N/A
8) F3M-Intl Falls	APT S-PRO	SLINOS	328%	N/A	N/A
9) G82R-Rugby	APT	SLINOS	N/A	645%	
10) L20D-Drayton (Normal)	APT, ASEA	SLINOS	697%	N/A	N/A
11) -Drayton (Em Nrth)	ASEA RXZF2	SLINOS		N/A	N/A
12) R50M-Moranville (Norm)	APT, West	SLINOS	1975%	N/A	N/A
13) -Moranville (Em N)	ASEA RXZF2	SLINOS		N/A	N/A

Appendix B.7: Summary for Case k61-sp15aa.sav (With 100 MW GI-0503)

```
INITIATED AT LOAD FLOW ENTRY POINT ON TUE, MAR 25 2008  10:16

K61-SP15AA.SAV;SUMMER;PK LD;SYSTEM INTACT           :
ND=451,MH=1264,MW=-311,OHMH=0,OHMP=150,EWTW=-120,BD=-170


                    P O W E R   F L O W   S U M M A R Y
--------------------------------------------------------------------------------
               NDEX:       451 MW         ECL-ARP:  -41 MW
               MHEX:      1264 MW         PRI-BYN: -270 MW
               MWSI:      -311 MW         AHD-GPK:  121 MW
                                          NI-WUMS:  339 MW
               COOPER S:  -175 MW         WNE-WKS:  187 MW
               FTCAL S:    -47 MW         GGS:     1284 MW
               GRIS-LNC:    51 MW         QC WEST: 1107 MW

           LOAD LEVELS AS PERCENT OF 2015 SUMMER PEAK:
           NORTH DAKOTA (ZONE 90,990) 3554.2 MW, 109.3% OF  3251.0 MW
           NSP             (AREA 600) 11888.3 MW, 100.1% OF  11875.0 MW
           MAN HYDRO       (AREA 667) 3076.0 MW, 100.0% OF  3076.0 MW

Load/Losses   MW  / MW       Generation        MW       Export            MW
----------- ------ -----     --------------- ------     --------------- ------
Manitoba      3075/ 274      MH total gross    4780     SPARE                0
Ont. total   23241/ 566         Wpg River       534     SPARE                0
     NW          0/   0         7 Sisters       165     SPARE                0
Sask.         3084/ 105      OH total gross   23417     East Bias          159
MP            2200/ 104         northwest         0     SPC>WAPA (B10T)   -170
NSP          11888/ 336      SPC total gross   2854     MH>SPC  (3-230)    229
N. Dakota     3554/ 328      MP total gross    2080     MH>SPC  (FALLS)    -63
Manitoba       714 MVARS     ND Cfd AC gross   3197     OH>MH  @Kenora       0
Ont. total   13541 MVARS               net      3027     OH>MP  @Ft Fran    150
     NW          0 MVARS     NSP East gross    2373     OH E>W @Wawa      -120
Sask.          725 MVARS               net      2259     OH>East USA          0
MP             594 MVARS         West gross    2638     F601C  @Forbes     712
NSP           2000 MVARS               net      2462     D602F  @Dorsey     931
N. Dakota      766 MVARS         Total net     9211     L20D   @Letell     272
                              WAPA SD Hydro        0     R50M   @Richer      72
                              Pleasant Valley    422     G82R   @Glenboro   -12
                              LGS/Trimont        246
                              SW MN Wind         825
                              Swing Bus         3237


Tfmrs          MVA/ Load     Ph Shifters  Deg/  MW      DC Lines          MW
------------- ---- -----     ------------ --- -----     --------------- ------
Wshell #1 7-7   42/  29%     Stinson       -8/  110     CU (1,2)         1103
Wshell #2 7-7   42/  29%     Boundary Dam -27/ -169     SQ BU (3,4)       455
Drayton#1 4-7   62/  44%     Whiteshell   -91/    0     MH Bipole 1      1406
Drayton#2 4-7   79/  42%     Int Falls    -84/  150     MH Bipole 2      1592
Dorsey #1 2-4  443/  36%     St. Lawrence  16/    0     MH (BP1+BP2)     2998
Dorsey #2 2-4  531/  44%                                Miles City E>W    200
Forbes    2-4  110/  16%                                RCDC (15)         199
                                                        Stegall (10)        0

Dorsey SC's       I/S  MVAR  Qmax/ Qmin    SVC's              MVAR  Qmax/ Qmin
----------------- --- -----  ---- -----    ----------------- -----  ---- -----
MIL 7-9G     17.0  2    331   600/ -330    Forbes        500   -17   400/ -450
SCE 1-3G     18.2  3    270   480/ -240    Fargo        13.2   -15    20/ -135
SCA 4-6G     18.2  3    270   480/ -240    Watertown    20.0     0   125/  -86
                        -----  ---- -----
       Total            872  1560/ -810    Series Caps       Num In Serv
       Margin           688                ----------------- -----------
                                           Roseau        500   2 of 2
                                           Chisago       500   1 of 1
```

Caps/Reactors		MVAR
Balta (FS)	230	60
Drayton	115	40
Drayton	13.8	0
Eau Claire(FS)	161	267
Kohlman Lake	115	240
Parkers Lk(FS)	115	0
Prairie (FS)	115	120
Ramsey (FS)	230	0
Red Rock	115	240
Rugby	13.8	-25
Split Rock(FS)	115	0
Sheyenne (FS)	115	120
Wilton/Bemidji	115	66

Caps/Reactors		MVAR
Arrowhead	230	80
Blackberry	230	47
Minntac	115	45
Riverton	230	47
Roseau Co.(FS)	230	30
Running (FS)	230	30
Running react	230	-20
Shannon	230	0
		0
Glenboro	230	0
Laverendrye	110	98
Richer react	230	0
St Vital	110	98

Caps/Reactors		MVAR
Chisago T 9	34.5	25
Chisago T 10	34.5	25
Forbes	230	0
Forbes	500	300
		0
Fargo	115	81
Watertown	20	20
Watertown	230	0
		0
		0
		0
		0
		0

Bus Voltages		V,pu
Adams	345	1.015
Alexandria	115	0.988
Audubon	115	1.008
Bemidji	115	1.024
Byron	345	1.029
Chisago Co.	345	1.041
Chisago Co.	500	1.043
Drayton	230	1.021
Eau Claire	345	1.038
WEST FARIBAULT	115	1.011
LaPorte	115	1.004
Maple River	230	1.018
Marshall Tap	115	1.019
Owatonna	161	0.990
Prairie	115	1.045
Prairie	230	1.029
Ramsey	230	1.006
Roseau County	230	1.036
Roseau County	500	1.071
Sheyenne	230	1.024
Thief R Falls	115	1.015
Tioga	230	1.006
Wahpeton	230	0.986
Winger	115	1.030

Bus Voltages		V,pu
Arrowhead	230	1.029
Badoura	115	1.003
Blackberry	230	1.036
Boise Cascade	13.8	1.030
Boise Cascade	115	1.019
ETCO	115	1.021
Forbes	230	1.042
Forbes	500	1.049
Hubbard	115	0.986
Intl Falls	115	1.021
Minntac	115	1.026
Moranville	230	1.034
Riverton	230	1.011
Running	230	1.029
Shannon	230	1.031
		0.000
Groton	345	1.025
Watertown	230	1.030
Watertown	345	1.032
		0.000
Dorsey	230	1.045
Dorsey	500	1.039
		0.000
		0.000

Bus Voltages		V,kV
Whiteshell	110	119.1
Kenora	220	249.0
Dryden	220	252.5
Fort Frances	220	252.1
Mackenzie	220	253.6
Lakehead	220	239.7
Marathon	220	241.2
Wawa	220	238.3
Mississagi	220	242.9
Fort Frances	118	120.2
Lakehead	118	124.2
Birch	118	120.4
Marathon	118	124.0
		0.0
		0.0
		0.0
		0.0
		0.0
		0.0
		0.0
		0.0
		0.0
		0.0
		0.0

Steady State Relay Margins (measured from inner blinder)

Relay Location	Manuf/Type	PSS Model	South	North	Em North
1) B10T-Tioga (South)	GE OST	SLLP	N/A		
2) -Tioga (North)	GE OST	SLLP	N/A	516%	
3) -Tioga (Em North)	GE OST	SLLP	N/A		443%
4) D602F-Dorsey	ATP ???	SLINOS	1097%	N/A	N/A
5) -Forbes (Normal)	ATP ???	SLINOS	708%	N/A	N/A
6) -Forbes (Em Nrth)	APT S-PRO	SLINOS		N/A	N/A
8) F3M-Intl Falls	APT S-PRO	SLINOS	329%	N/A	N/A
9) G82R-Rugby	APT	SLINOS	N/A	1629%	
10) L20D-Drayton (Normal)	APT, ASEA	SLINOS	716%	N/A	N/A
11) -Drayton (Em Nrth)	ASEA RXZF2	SLINOS		N/A	N/A
12) R50M-Moranville (Norm)	APT, West	SLINOS	1931%	N/A	N/A
13) -Moranville (Em N)	ASEA RXZF2	SLINOS		N/A	N/A

Appendix B.8: Summary for Case k62-sp15aa.sav (With 125 MW GI-0503)

```
INITIATED AT LOAD FLOW ENTRY POINT ON TUE, MAR 25 2008  10:16

K62-SP15AA.SAV;SUMMER;PK LD;SYSTEM INTACT           :
ND=472,MH=1264,MW=-306,OHMH=0,OHMP=150,EWTW=-120,BD=-170


                    P O W E R   F L O W   S U M M A R Y
-----------------------------------------------------------------------------
               NDEX:       472 MW         ECL-ARP:  -38 MW
               MHEX:      1264 MW         PRI-BYN: -267 MW
               MWSI:      -306 MW         AHD-GPK:  123 MW
                                          NI-WUMS:  338 MW
               COOPER S:  -170 MW         WNE-WKS:  188 MW
               FTCAL S:    -44 MW         GGS:     1285 MW
               GRIS-LNC:    53 MW         QC WEST: 1104 MW

           LOAD LEVELS AS PERCENT OF 2015 SUMMER PEAK:
           NORTH DAKOTA (ZONE 90,990) 3554.2 MW, 109.3% OF  3251.0 MW
           NSP             (AREA 600) 11888.3 MW, 100.1% OF  11875.0 MW
           MAN HYDRO       (AREA 667) 3076.0 MW, 100.0% OF  3076.0 MW

Load/Losses   MW  / MW       Generation        MW       Export            MW
----------- ------ -----     --------------- ------     --------------- ------
Manitoba      3075/ 274      MH total gross    4780     SPARE                0
Ont. total   23241/ 566         Wpg River       534     SPARE                0
     NW          0/   0         7 Sisters       165     SPARE                0
Sask.         3084/ 105      OH total gross   23417     East Bias          161
MP            2200/ 104         northwest         0     SPC>WAPA (B10T)   -170
NSP          11888/ 336      SPC total gross   2854     MH>SPC  (3-230)    228
N. Dakota     3554/ 331      MP total gross    2080     MH>SPC  (FALLS)    -63
Manitoba       714 MVARS     ND Cfd AC gross   3197     OH>MH  @Kenora       0
Ont. total   13541 MVARS               net      3027     OH>MP  @Ft Fran    150
     NW          0 MVARS     NSP East gross    2373     OH E>W @Wawa      -120
Sask.          725 MVARS               net      2259     OH>East USA          0
MP             594 MVARS         West gross    2638     F601C  @Forbes     715
NSP           2000 MVARS               net      2462     D602F  @Dorsey     934
N. Dakota      766 MVARS         Total net     9211     L20D   @Letell     271
                              WAPA SD Hydro        0     R50M   @Richer      72
                              Pleasant Valley    422     G82R   @Glenboro   -14
                              LGS/Trimont        246
                              SW MN Wind         825
                              Swing Bus         3236


Tfmrs          MVA/ Load     Ph Shifters  Deg/  MW      DC Lines          MW
------------- ---- -----     ------------ --- -----     --------------- ------
Wshell #1 7-7   42/  29%     Stinson       -8/  110     CU (1,2)         1104
Wshell #2 7-7   42/  29%     Boundary Dam -26/ -169     SQ BU (3,4)       455
Drayton#1 4-7   62/  44%     Whiteshell   -90/    0     MH Bipole 1      1405
Drayton#2 4-7   79/  42%     Int Falls    -84/  150     MH Bipole 2      1592
Dorsey #1 2-4  445/  37%     St. Lawrence  16/    0     MH (BP1+BP2)     2998
Dorsey #2 2-4  533/  44%                                Miles City E>W    200
Forbes    2-4  111/  16%                                RCDC (15)         199
                                                        Stegall (10)        0

Dorsey SC's       I/S  MVAR  Qmax/ Qmin    SVC's              MVAR  Qmax/ Qmin
----------------- --- -----  ---- -----    ----------------- -----  ---- -----
MIL 7-9G     17.0  2    332   600/ -330   Forbes        500   -17   400/ -450
SCE 1-3G     18.2  3    271   480/ -240   Fargo        13.2   -13    20/ -135
SCA 4-6G     18.2  3    271   480/ -240   Watertown    20.0     1   125/  -86
                        -----  ---- -----
       Total            874  1560/ -810   Series Caps       Num In Serv
       Margin           686               ----------------- -----------
                                          Roseau        500   2 of 2
                                          Chisago       500   1 of 1
```

Caps/Reactors		MVAR
Balta (FS)	230	60
Drayton	115	40
Drayton	13.8	0
Eau Claire(FS)	161	267
Kohlman Lake	115	240
Parkers Lk(FS)	115	0
Prairie (FS)	115	120
Ramsey (FS)	230	0
Red Rock	115	240
Rugby	13.8	-25
Split Rock(FS)	115	0
Sheyenne (FS)	115	120
Wilton/Bemidji	115	66

Caps/Reactors		MVAR
Arrowhead	230	80
Blackberry	230	47
Minntac	115	45
Riverton	230	47
Roseau Co.(FS)	230	30
Running (FS)	230	30
Running react	230	-20
Shannon	230	0
		0
Glenboro	230	0
Laverendrye	110	98
Richer react	230	0
St Vital	110	98

Caps/Reactors		MVAR
Chisago T 9	34.5	25
Chisago T 10	34.5	25
Forbes	230	0
Forbes	500	300
		0
Fargo	115	81
Watertown	20	20
Watertown	230	0
		0
		0
		0
		0
		0

Bus Voltages		V,pu
Adams	345	1.015
Alexandria	115	0.988
Audubon	115	1.007
Bemidji	115	1.023
Byron	345	1.029
Chisago Co.	345	1.041
Chisago Co.	500	1.043
Drayton	230	1.021
Eau Claire	345	1.038
WEST FARIBAULT	115	1.011
LaPorte	115	1.004
Maple River	230	1.017
Marshall Tap	115	1.019
Owatonna	161	0.990
Prairie	115	1.044
Prairie	230	1.028
Ramsey	230	1.005
Roseau County	230	1.035
Roseau County	500	1.070
Sheyenne	230	1.023
Thief R Falls	115	1.014
Tioga	230	1.004
Wahpeton	230	0.986
Winger	115	1.029

Bus Voltages		V,pu
Arrowhead	230	1.029
Badoura	115	1.003
Blackberry	230	1.035
Boise Cascade	13.8	1.030
Boise Cascade	115	1.019
ETCO	115	1.021
Forbes	230	1.042
Forbes	500	1.049
Hubbard	115	0.985
Intl Falls	115	1.021
Minntac	115	1.026
Moranville	230	1.033
Riverton	230	1.010
Running	230	1.029
Shannon	230	1.031
		0.000
Groton	345	1.024
Watertown	230	1.030
Watertown	345	1.032
		0.000
Dorsey	230	1.045
Dorsey	500	1.039
		0.000
		0.000

Bus Voltages		V,kV
Whiteshell	110	119.1
Kenora	220	249.0
Dryden	220	252.5
Fort Frances	220	252.1
Mackenzie	220	253.6
Lakehead	220	239.7
Marathon	220	241.2
Wawa	220	238.3
Mississagi	220	242.9
Fort Frances	118	120.2
Lakehead	118	124.2
Birch	118	120.4
Marathon	118	124.0
		0.0
		0.0
		0.0
		0.0
		0.0
		0.0
		0.0
		0.0
		0.0
		0.0
		0.0

Steady State Relay Margins (measured from inner blinder)

Relay Location	Manuf/Type	PSS Model	South	North	Em North
1) B10T-Tioga (South)	GE OST	SLLP	N/A		
2) -Tioga (North)	GE OST	SLLP	N/A	511%	
3) -Tioga (Em North)	GE OST	SLLP	N/A		437%
4) D602F-Dorsey	ATP ???	SLINOS	1091%	N/A	N/A
5) -Forbes (Normal)	ATP ???	SLINOS	704%	N/A	N/A
6) -Forbes (Em Nrth)	APT S-PRO	SLINOS		N/A	N/A
8) F3M-Intl Falls	APT S-PRO	SLINOS	329%	N/A	N/A
9) G82R-Rugby	APT	SLINOS	N/A	1612%	
10) L20D-Drayton (Normal)	APT, ASEA	SLINOS	720%	N/A	N/A
11) -Drayton (Em Nrth)	ASEA RXZF2	SLINOS		N/A	N/A
12) R50M-Moranville (Norm)	APT, West	SLINOS	1921%	N/A	N/A
13) -Moranville (Em N)	ASEA RXZF2	SLINOS		N/A	N/A

Appendix C – Data Files for Steady-State Analysis (i.e., Data Files used for PSS/E ACCC Analysis)

Appendix C.1: Subsystem Description Data File (File minot.sub)

```
COM *** SUBSYSTEM DESCRIPTION FILE FOR GI-0503 SYSTEM IMPACT STUDY ***
SYSTEM NORTHMAPP_HV
 JOIN 'GROUP 1'
  AREA 667
  KVRANGE 110 500
 END
 JOIN 'GROUP 2'
  AREAS 600 610
  KVRANGE 110 500
 END
  JOIN 'GROUP 3'
   AREAS 618 626
   KVRANGE 110 500
 END
 JOIN 'GROUP 4'
  AREA 652
  KVRANGE 110 500
 END
END

SYSTEM MP_HV
 JOIN 'GROUP 1'
  AREA 608
  KVRANGE 110 500
 END
END

SYSTEM MP_WESTDIV
 JOIN 'GROUP 1'
  AREA 610
  KVRANGE 110 500
 END
END

SYSTEM OTP_345_230
 JOIN 'GROUP 1'
  AREA 626
  KVRANGE 230 345
 END
END

SYSTEM OTP_115
 JOIN 'GROUP 1'
  AREA 626
  KVRANGE 110 115
 END
END

SUBSYSTEM MINOT_POI
 BUS 60503
END

END
```

Appendix C.2: Monitored Element Data File (File minot.mon)

```
COM *** MONITORED ELEMENT FILE FOR GI-0503 SYSTEM IMPACT STUDY ***

MONITOR BRANCHES IN SYSTEM NORTHMAPP_HV
MONITOR TIES FROM SYSTEM NORTHMAPP_HV

COM FOR SYSTEM INTACT ANALYSIS, USE THE FOLLOWING VOLTAGE CRITERIA:
COM MONITOR VOLTAGE RANGE SYSTEM NORTHMAPP_HV 0.95 1.05
COM MONITOR VOLTAGE RANGE SYSTEM MP_HV        1.00 1.05
COM MONITOR VOLTAGE RANGE SYSTEM MP_WESTDIV   0.96 1.05
COM MONITOR VOLTAGE RANGE SYSTEM OTP_345_230  0.97 1.05
COM MONITOR VOLTAGE RANGE SYSTEM OTP_115      0.97 1.07

COM FOR CONTINGENCY ANALYSIS, USE THE FOLLOWING VOLTAGE CRITERIA:
MONITOR VOLTAGE RANGE SYSTEM NORTHMAPP_HV 0.90 1.10
MONITOR VOLTAGE RANGE SYSTEM MP_HV        0.95 1.05
MONITOR VOLTAGE RANGE SYSTEM MP_WESTDIV   0.92 1.05
MONITOR VOLTAGE RANGE SYSTEM OTP_345_230  0.92 1.10
MONITOR VOLTAGE RANGE SYSTEM OTP_115      0.92 1.10

END
```

Appendix C.3: Contingency Description Data File (File minot.con)

```
COM *** CONTINGENCY DESCRIPTION FILE FOR GI-0503 SYSTEM IMPACT STUDY ***

COM 'DERIVED FROM CONTINGENCY FILE PROVIDED WITH MAPP 2002 SERIES LF CASES     '
COM 'MODIFIED 12/17/2006 BY ABB FOR COMPATIBILITY WITH MAPP 2006 SERIES CASES  '

SINGLE BRANCH IN SUBSYSTEM 'NORTHMAPP_HV'
SINGLE TIE FROM SUBSYSTEM 'NORTHMAPP_HV'

COM ' '
COM ' DELYN HELM ADDED ADAMS MULTIPLE CONTINGENCIES, ONLY WORKS '
COM ' WITH MODEL CHANGE OF ADDING TWO 161KV BUSES AT ADAMS SUM.'
COM ' NAME OF IDEV THAT MAKES THIS MODEL CHANGE IS ../idv/i-split-adams.idv'
COM '  '
COM
COM '  COMPLETED UPDATING ON 8-02-01, LOREN '
COM ' '
COM '   Current MAPP Contingency File 2002 Winter'
COM ' '
COM '    DC Reductions Not Shown, commented out, to be modified'
COM '    according to model used  and when needed by study group(s).'
COM ' '
COM ' ** The DC runback figures are not up to date, they'
COM '    reflect conditions modeled in the winter model'
COM ' '
COM ' Flow at 67557 to 66752 is  xxx.x MW' Letelier - Drayton
COM ' Flow at 67576 to 60175 is   xx.x MW' Richer - Roseau
COM ' Flow at 67564 to 60173 is  xxx.x MW' Dorsey - Riel
COM ' Flow at 60198 to 60197 is  xxx.x MW, Chisago N-Chisago'
COM ' Flow at 60101 to 60198 is  xxx.x MW, Chisago-Forbes 500kV'
COM ' Flow at 60197 to 61494 is  xxx.x MW, Chisago xfr D27'
COM ' Flow at 60197 to 61493 is  xxx.x MW, Chisago xfr D17'
COM ' '
COM ' '
COM ' '
COM ' Change load on bus  67503 dorsey from zero for DC trip'
COM ' Cannot change gen on a swing bus at kettle 67683 per PTI'
COM ' '
COM ' '
COM '           All 500 kV DC reduction responses are'
COM '           based on the flow from the Dorsey bus 67564.'
COM '           No other bus flow should be used when simulating'
COM '           a trip that OPENS any 500 kV line section(s).'
COM ' '
COM ' '
COM ' '
COM ' '
COM ' REVIEWED BY XCEL ENERGY 7/2002'
COM ' 009 Defined as multi-circuit, tower'
COM ' Both 63030-60270-60233 and 63030-60202 must trip for the Coal'
COM ' Creek to Dickinson DC line to trip.  The DC will'
COM ' carry 1000 MW if only one of these lines trip'
COM ' SET BUS 63000 AND 63001 = PGEN + PLOAD = xxx.0 and xxx.0'
COM ' SET BUS 63041 AND 63030 ALWAYS ZERO FOR DC TRIP'
COM 'A 60160-60272 SHERCO 3-MPLEGV23 CKT 1   OPENS  C or D or E tower, MTL B,H,I,J'
COM 'B 60272-60202 MPLEGV23-COON CK3 CKT 1   OPENS  E or G tower, MTL A,H,I,J'
COM 'C 60151-60160 MNTCELO3-SHERCO 3 CKT 1   OPENS  A  tower'
COM 'D 60151-60114 MNTCELO3-ELM CRK3 CKT 1   OPENS  A  R of W,  tower'
COM 'E 60114-60233 ELM CRK3-PARKERS3 CKT 1   OPENS  A or F,  R of W, tower'
COM 'F 63030-60270 DICKNSN3-MPLEGV13 CKT 1   OPENS  E or G  tower, F G trip DC line'
COM 'F 60270-60233 MPLEGV13-PARKERS3 CKT 1   OPENS  with F'
COM 'G 63030-60202 DICKNSN3-COON CK3 CKT 1   OPENS  B or F  tower, F G trip DC line'
COM '   Muti-circuit outage of transformer with Dummy Bus and dummy ownership bus'
COM 'A 60160-60272 SHERCO 3-MPLEGV23 CKT 1   OPENS  B,H,I,J  MTL'
COM 'H 60202-61488 COON CK3-CNCMID1Y CKT 1   OPENS  A,B,I,J  MTL'
COM 'I 60203-61488 COON CK7-CNCMID1Y CKT 1   OPENS  A,B,H,J  MTL'
COM 'J 60656-61488 CNCTER19-CNCMID1Y CKT 1   OPENS  A,B,H,I  MTL'
COM 'B 60272-60202 MPLEGV23-COON CK3 CKT 1   OPENS  A,H,I,J  MTL'
```

```
COM '-------------------------------------------------------------'
CONTINGENCY '009   1'
COM 'Tower A with C and, B,H,I,J multi-terminal response'
TRIP LINE FROM BUS 60160 TO BUS 60272 CKT 1
TRIP LINE FROM BUS 60272 TO BUS 60202 CKT 1
TRIP LINE FROM BUS 60151 TO BUS 60160 CKT 1
TRIP LINE FROM BUS 60202 TO BUS 61488 CKT 9
TRIP LINE FROM BUS 61488 TO BUS 60203 CKT 9
TRIP LINE FROM BUS 61488 TO BUS 60656 CKT 9
END
CONTINGENCY '009   2'
COM 'Tower A with D with E and, B,H,I,J multi-terminal response'
TRIP LINE FROM BUS 60160 TO BUS 60272 CKT 1
TRIP LINE FROM BUS 60272 TO BUS 60202 CKT 1
TRIP LINE FROM BUS 60151 TO BUS 60114 CKT 1
TRIP LINE FROM BUS 60202 TO BUS 61488 CKT 9
TRIP LINE FROM BUS 61488 TO BUS 60203 CKT 9
TRIP LINE FROM BUS 61488 TO BUS 60656 CKT 9
END
CONTINGENCY '009   4'
COM 'Tower G with B and, A,H,I,J multi-terminal response'
TRIP LINE FROM BUS 60160 TO BUS 60272 CKT 1
TRIP LINE FROM BUS 60272 TO BUS 60202 CKT 1
TRIP LINE FROM BUS 63030 TO BUS 60202 CKT 1
TRIP LINE FROM BUS 60202 TO BUS 61488 CKT 9
TRIP LINE FROM BUS 61488 TO BUS 60203 CKT 9
TRIP LINE FROM BUS 61488 TO BUS 60656 CKT 9
END
CONTINGENCY '009   5'
COM 'Tower DC with Elm Crk-Parkers'
TRIP LINE FROM BUS 60114 TO BUS 60233 CKT 1
TRIP LINE FROM BUS 63030 TO BUS 60270 CKT 1
TRIP LINE FROM BUS 60270 TO BUS 60233 CKT 1
END
CONTINGENCY '009   6'
COM 'Transformer multi-terminal outage, A,B,H,I,J'
TRIP LINE FROM BUS 60160 TO BUS 60272 CKT 1
TRIP LINE FROM BUS 60272 TO BUS 60202 CKT 1
TRIP LINE FROM BUS 60202 TO BUS 61488 CKT 9
TRIP LINE FROM BUS 61488 TO BUS 60203 CKT 9
TRIP LINE FROM BUS 61488 TO BUS 60656 CKT 9
END
CONTINGENCY '009   7'
COM 'Tower A with E and, multi-terminal response B,H,I,J'
TRIP LINE FROM BUS 60160 TO BUS 60272 CKT 1
TRIP LINE FROM BUS 60272 TO BUS 60202 CKT 1
TRIP LINE FROM BUS 60114 TO BUS 60233 CKT 1
TRIP LINE FROM BUS 60202 TO BUS 61488 CKT 9
TRIP LINE FROM BUS 61488 TO BUS 60203 CKT 9
TRIP LINE FROM BUS 61488 TO BUS 60656 CKT 9
END
CONTINGENCY '009   8'
COM 'Tower E with F with A and, responding multi-terminal B,H,I,J'
TRIP LINE FROM BUS 60114 TO BUS 60233 CKT 1
TRIP LINE FROM BUS 60160 TO BUS 60272 CKT 1
TRIP LINE FROM BUS 60272 TO BUS 60202 CKT 1
TRIP LINE FROM BUS 63030 TO BUS 60202 CKT 1
TRIP LINE FROM BUS 60202 TO BUS 61488 CKT 9
TRIP LINE FROM BUS 61488 TO BUS 60203 CKT 9
TRIP LINE FROM BUS 61488 TO BUS 60656 CKT 9
END
COM ' '
COM ' 015 Defined as multi-terminal and multi-circuit'
COM ' This multi-terminal/circuit outage consists of three'
COM ' parts.  All of the multi-terminal/circuit outages listed'
COM ' in outage 63336 are valid and will trip regardless'
COM ' of any base flow.  However, if certain base flows'
COM ' are at levels as outlined below and flows are south'
COM ' the multi-terminal/circuit outage will also cause a:'
COM ' '
COM '     100% DC runback for MTL outage of the Dorsey-Roseau-Forbes'
```

```
COM '     500kV line as measured at the 67564 Dorsey bus.'
COM ' '
COM '     40% to 100% DC runback, depending on the base flow on'
COM '     the Forbes-Chisago 500kV line, for the outage of'
COM '     Forbes-Chisago 500kV line as measured at the Dorsey'
COM '     bus 67564.'
COM ' '
COM ' Also, loss of one or both series capacitors at'
COM ' Roseau can cause either a 13% or 26% DC reduction.'
COM ' respectively, regardless of base flows, as measured at'
COM ' the Dorsey bus 67564.'
COM ' '
COM ' '
COM ' On the south end of the Dorsey-Roseau-Forbes-Chisago 500 kV'
COM ' line A DC reduction may be required for the trip of'
COM ' Chisago-Forbes 500 kV line section.  If the base flow'
COM ' on Chisago-Forbes 345 kV line is 350 to 550 MW'
COM ' there is a 40% DC reduction.  If the base flow on'
COM ' Chisago-Forbes 500 kV line is greater than 550 MW'
COM ' there is a 100% DC reduction.  As measured at the'
COM ' Dorsey bus.'
COM ' '
COM ' On the South end of the Dorsey-Roseau-Forbes-Chisago 500 kV'
COM ' line Loss of BOTH  Chisago County Transfomers will in turn'
COM ' cause a multi-circuit loss of the Chisago-Forbes'
COM ' 500 kV line.  Since the south end of the 500 kV line'
COM ' is opened, a 40% DC reduction is be required if flows'
COM ' are 350 to 550 MW and a 100% reduction if flows are greater.'
COM ' than 550 MW on the Chisago-Forbes 500 kV line - as measured'
COM ' at the Dorsey bus.  A 100% reduction required since a cross'
COM ' trip of the north end of the 500 kV line will take place'
COM ' if the flow on the south end is 550 MW or greater.'
COM ' '
COM ' If the flow on Chisago-Forbes 500 kV line is less than'
COM ' 350 MW (419 MW), no DC reduction is required for the Chisago'
COM ' to Forbes 500 kV line trip.'
COM ' '
COM ' See Outage  905 PARTS 2 and 7 below.'
COM ' '
COM ' '
COM ' '
COM ' Part 1, North end of the 500 kV Line, Forbes north to Dorsey'
COM ' Part 1 Can trip regardless of base flows.'
COM ' '
COM ' At the north end of the 500 kV line, Forbes north to Dorsey,'
COM ' The following is a valid Transformer multi-terminal line trip'
COM ' which in turn OPENS the 500 kV line between Roseau-Forbes-Chisago.'
COM ' A DC reduction of 100%, as measured at the Dorsey bus, (Dorsey Sub)'
COM ' is required for loss of the Forbes-Roseau 500 kV line section'
COM ' in the 1998 winter transfer study, excluding reduction for'
COM ' capacitor bank(s).'
COM ' '
COM ' PART 1 simulates the trip of the Forbes 500/230 kV'
COM ' transformer 1 or 2 which open ends the Roseau-Forbes-Chisago'
COM ' 500 kV line which in turn requires a 100% DC reduction, as'
COM ' measured at the Dorsey 67564 bus, in 1998'
COM ' winter study.'
COM ' '
COM 'A 60101-61550 FORBES 2-FORB1JCT  CKT 1   OPENS  B C D E F G H I J K'
COM 'B 61550-61624 FORB1JCT-FORBES 4  CKT 1   OPENS  A C D E F G H I J K'
COM 'C 61550-61551 FORB1JCT-FORB1TRT  CKT 1   OPENS  A B D E F G H I J K'
COM ' '
COM 'D 60101-61552 FORBES 2-FORB2JCT  CKT 2   OPENS  A B C E F G H I J K'
COM 'E 61552-61624 FORB2JCT-FORBES 4  CKT 2   OPENS  A B C D F G H I J K'
COM 'F 61552-61553 FORB2JCT-FORB2TRT  CKT 2   OPENS  A B C D E G H I J K'
COM ' '
COM 'G 60101-60198 FORBES 2-CHIS-N 2  CKT 1'
COM 'H 60101-60174 FORBES 2-ROSEAUS2'
COM 'I 67564-60173 DORSEY 5-ROSEAUN2  CKT 1(cap banks modeled here)'
COM  J 60173-60174 ROSEAUN2-ROSEAUS2  CKT 1'
COM 'K 60174-60101 ROSEAUS2-FORBES 2  CKT 1'
```

```
COM ' '
COM ' '
COM ' PART 2 - Southern End of the 500 kV line'
COM ' Part 2 Can trip regardless of base flows.'
COM ' '
COM ' The following is a valid multi-circuit trip '
COM ' with flows south and with the exception that'
COM ' IF FLOW ON FORBES-CHISAGO IS LESS THAN 350 MW, NO DC TRIP'
COM ' IF FLOW ON THE FORBES-CHISAGO IS 350 TO 550 MW, 40% DC RED'
COM ' IF FLOW ON THE FORBES-CHISAGO IS OVER 550 MW, 100% DC RED'
COM ' If flows are 550 MW or more on the south end of the 500 kV line'
COM ' A cross trip of the north end of the 500 kV line will'
COM ' occur when the south end is tripped.'
COM ' '
COM ' Base flow on 60101-60198 = 419,  40% DC reduction '
COM ' required for the 1998 winter transfer study.'
COM '
COM ' Also,'
COM ' When the series capacitors (both cap banks) are bypassed'
COM ' at Roseau a 26% DC reduction is required as measured at'
COM ' Dorsey bus 67564. If only one cap bank is bypassed'
COM ' then there is a 13% reduction.  Both banks will be'
COM ' bypassed in part 2 for the 1998 winter study'
COM ' '
COM ' There will be a minimum of 26%, 40% OR 100% DC reduction'
COM ' simulated depending on base case conditions as noted'
COM ' above in the 1998 winter study. See Part 2 outage below.'
COM ' '
COM 'C 60101-60198 FORBES 2-CHIS-N 2  CKT 1'
COM 'E 60197-60198 CHIS CO2-CHIS-N 2  CKT 1'
COM ' '
COM ' '
COM ' PART 3 North end of the 500kV Line'
COM ' PART 3 Trips regardless of base flows'
COM ' '
COM ' PART 3 Simulates the 500 kV line cross trip.'
COM ' With flows south the following outage simulates'
COM ' a multi-circuit cross trip where both Dorsey-Roseau'
COM ' 500 kV and Roseau-Forbes 500 kV lines trip together.'
COM ' With a cross trip from Dorsey to Forbes on the'
COM ' 500 kV line, a 100% DC reducion (570.0 MW) is'
COM ' required regardless of base case flows, See Part 1.'
COM ' Also,'
COM ' When the series capacitors (both cap banks) are bypassed'
COM ' at ROSEAU  a 26% DC reduction is required as measured'
COM ' at Dorsey bus 67564. If only one cap bank is bypassed'
COM ' then there is a 13% reduction.  Two banks will be'
COM ' bypassed in Part 4 in 903 for the 1998 winter study.
COM ' '
com ' '
COM 'F 67564-60173 DORSEY 5-ROSEAUN2 CKT 1(cap banks modeled here)'
COM  G 60173-60174 ROSEAUN2-ROSEAUS2 CKT 1'
COM 'H 60174-60101 ROSEAUS2-FORBES 2 CKT 1'
COM '-------------------------------------------------------'
COM ' 020 Defined as multi-terminal, both Chisago Transfomers tripped'
COM ' NO DC REDUCTION FOR SINGLE CHISAGO TRANSFORMER OUTAGE'
COM ' '
COM ' IF FLOW ON FORBES-CHISAGO-N  IS LESS THAN 350 MW, NO DC RED'
COM ' IF FLOW ON THE FORBES-CHISAGO IS 350 TO 550 MW, 40% DC RED'
COM ' IF FLOW ON THE FORBES-CHISAGO IS OVER 550 MW, 100% DC RED'
COM ' Simulates both Chisago Tranformers tripping and the'
COM ' Forbes-Chisago 500 kV response.'
COM ' Base flow on Forbes-Chisago = 419.0 MW, 40% DC reduction required'
COM ' '
COM 'A 60101-60198 FORBES 2-CHIS-N 2 CKT 1   OPENS B C'
COM 'B 60197-61493 CHIS CO2-CHIS D17 CKT 1   VLD SGL'
COM 'C 60197-61494 CHIS CO2-CHIS D27 CKT 1   mtl see outage 905, W X Y below'
COM '-------------------------------------------------------'
COM 'CONTINGENCY 022 '
COM 'REVIEWED BY XCEL ENERGY 7/2002'
COM ' 022  Defined as tower and multi-terminal combinations'
```

```
COM ' South end of the 500 kV line.'
COM ' '
COM ' Loss of both Chisago County transfomers will cause a'
COM ' multi-circuit loss of the Forbes-Chisago 500 kV line'
COM ' Since the 500 kV line is opened a DC reduction'
COM ' may be required, as measured at Dorsey bus 67564,'
COM ' if flows are 350 MW or higher on Forbes-Chisago'
COM ' 500 kV line.  The flow on Forbes-Chisago is less'
COM ' than 350 MW (419 MW) therefore, a DC reduction is '
COM ' required for the trip of both Chisago County transformers'
COM ' See PART 2 and 7 below.
COM ' '
COM ' A B C is tower only'
COM ' A B C Tower and multi-terminal combination are in part 1 below'
COM 'A 60202-60221 COON CK3-KOLMNLK3   OPENS  B  C tower and MTL'
COM 'B 60221-60251 KOLMNLK3-TERMINL3   OPENS  A  C tower and MTL'
COM 'C 60202-60251 COON CK3-TERMINL3   OPENS  A  B tower and MTL'
COM '**   Defined as multi-circuit, tower'
COM ' D E F is tower only'
COM 'Note: Both D and E must be opened for the Chisago transformers'
COM '      to open.  D and E alone do not open any Chisago transformer(s).'
COM ' D E F Tower and multi-terminal combination are in part 2 below'
COM 'D 60186-60199 AS KING3-CHIS CO3   OPENS  E  F tower'
COM 'E 60199-60221 CHIS CO3-KOLMNLK3   OPENS  D  F tower and MTL'
COM 'F 60186-60221 AS KING3-KOLMNLK3   OPENS  D  E tower'
COM '**    Defined as multi-terminal'
COM ' G and H are described in part 11 below'
COM 'G 60199-60221 CHIS CO3-KOLMNLK3       OPENS  H'
COM 'H 60221-60222 KOLMNLK3-KOLMNLK7 CKT 2 OPENS  G'
COM '**    Defined as multi-terminal'
COM ' I and J are described in part 9 below'
COM 'I 60202-60221 COON CK3-KOLMNLK3       OPENS  J'
COM 'J 60221-60222 KOLMNLK3-KOLMNLK7 CKT 1 OPENS  I'
COM '**    Defined as multi-terminal'
COM 'K and L are described in part 12 below'
COM 'K  60221-60251 KOLMNLK3-TERMINL3      OPENS  L1 L2 L3'
COM 'L1 60251-61492 TERMINL3-TERMID1Y      OPENS  K  L2 L3'
COM 'L2 61492-60252 TERMID1Y-TERMINL7      OPENS  K  L1 L3'
Com 'L3 61492-61187 TERMID1Y-TERTER19      OPENS  K  L1 L2'
COM '**    Defined as multi-terminal'
COM ' M and N are described in part 10 below'
COM 'M  60202-60251 COON CK3-TERMINL3      OPENS  N'
COM 'N1 60251-61491 TERMINL3-TERMID2Y      OPENS  M  N2 N3'
COM 'N2 61491-60252 TERMID2Y-TERMINL7      OPENS  M  N1 N3'
Com 'N3 61491-61188 TERMID2Y-TERTER29      OPENS  M  N1 N2'
COM '**    Defined as multi-terminal'
COM ' R S T are dexcribed in part 13 below'
COM 'R  60199-61493 CHIS CO3-CHIS D17     OPENS S T'
COM 'S  60653-61493 CHIS T19-CHIS D17     OPENS R T'
COM 'T  60197-61493 CHIS CO2-CHIS D17     OPENS R S'
COM '**    Defined as multi-circuit'
COM 'U  60197-60198 CHIS CO2-CHIS-N 2     OPENS V'
COM 'V  60198-60101 CHIS-N 2-FORBES 2     OPENS U AND MAY REDUCE DC'
COM '**    Defined as multi-terminal'
COM 'W X Y are dexcribed in part 14 below'
COM 'W  60197-61494 CHIS CO2-CHIS D27     OPENS X Y'
COM 'X  60199-61494 CHIS CO3-CHIS D27     OPENS W Y'
COM 'Y  60654-61494 CHIS T29-CHIS D27     OPENS X W'
COM ' NO DC REDUCTION ON ITEM 2 & 7 BELOW, IF FLOW IS'
COM ' LESS THAN 500 MW FORBES-CHISAGO. However there'
COM ' is a 26% reduction for bypassing the two capacitor'
COM ' banks at Forbes.'
COM ' 60101-60198 FLOW = 136.0 MW, REDUCE DC  0% FOR'
COM ' FLOW OUT OF BUS 67564 but,  reduce 26% for bypassing'
COM ' the Forbes capacitor bank.'
COM ' Will simulate worst case only, reduction of 81.0 MW'
COM '-----------------------------------------------------------'
CONTINGENCY '022 1'
COM 'Tower outage A B C and resulting multi-terminals'
TRIP LINE FROM BUS 60202 TO BUS 60221 CKT 1
TRIP LINE FROM BUS 60221 TO BUS 60251 CKT 1
```

```
TRIP LINE FROM BUS 60202 TO BUS 60251 CKT 1
COM 'Also trips the following because of A where'
COM 'A is the same as MTL I'
TRIP LINE FROM BUS 60221 TO BUS 60222 CKT 10
COM 'Also trips the following because of B where'
COM 'B is the same as MTL K'
TRIP LINE FROM BUS 60251 TO BUS 61492 CKT 10
TRIP LINE FROM BUS 61492 TO BUS 60252 CKT 10
TRIP LINE FROM BUS 61492 TO BUS 61187 CKT 10
COM 'Also trips the following because of C where'
COM 'C is the same as MTL M'
TRIP LINE FROM BUS 60251 TO BUS 61491 CKT 9
TRIP LINE FROM BUS 61491 TO BUS 60252 CKT 9
TRIP LINE FROM BUS 61491 TO BUS 61188 CKT 9
END
CONTINGENCY '022 3'
COM 'Tower outage and resulting multi-terminal'
COM '60202-60221 and 60202-60251 is the tower outage A,C'
TRIP LINE FROM BUS 60202 TO BUS 60221 CKT 1
TRIP LINE FROM BUS 60202 TO BUS 60251 CKT 1
COM 'Also trips the following because of A where'
COM 'A is the same as MTL I'
TRIP LINE FROM BUS 60221 TO BUS 60222 CKT 9
COM 'Also trips the following because of C where'
COM 'C is the same as MTL M'
TRIP LINE FROM BUS 60251 TO BUS 61491 CKT 9
TRIP LINE FROM BUS 61491 TO BUS 60252 CKT 9
TRIP LINE FROM BUS 61491 TO BUS 61188 CKT 9
END
CONTINGENCY '022 4'
COM 'Tower outage and resulting multi-terminal'
COM '60202-60221 and 60221-60251 is the tower outage, A,B'
TRIP LINE FROM BUS 60202 TO BUS 60221 CKT 1
TRIP LINE FROM BUS 60221 TO BUS 60251 CKT 1
COM 'Also trips the following because of A where'
COM 'A is the same as MTL I'
TRIP LINE FROM BUS 60221 TO BUS 60222 CKT 9
COM 'Also trips the following because of B where'
COM 'B is the same as MTL K'
TRIP LINE FROM BUS 60251 TO BUS 61492 CKT 10
TRIP LINE FROM BUS 61492 TO BUS 60252 CKT 10
TRIP LINE FROM BUS 61492 TO BUS 61187 CKT 10
END
CONTINGENCY '022 5'
COM 'Tower outage and resulting multi-terminal'
COM '60221-60251 and 60202-60251 is the tower outage B,C'
TRIP LINE FROM BUS 60221 TO BUS 60251 CKT 1
TRIP LINE FROM BUS 60202 TO BUS 60251 CKT 1
COM 'Also trips the following because of B where'
COM 'B is the same as MTL K'
TRIP LINE FROM BUS 60251 TO BUS 61492 CKT 10
TRIP LINE FROM BUS 61492 TO BUS 60252 CKT 10
TRIP LINE FROM BUS 61492 TO BUS 61187 CKT 10
COM 'Also trips the following because of C where'
COM 'C is the same as MTL M'
TRIP LINE FROM BUS 60251 TO BUS 61491 CKT 9
TRIP LINE FROM BUS 61491 TO BUS 60252 CKT 9
TRIP LINE FROM BUS 61491 TO BUS 61188 CKT 9
END
CONTINGENCY '022 6'
COM 'Tower outage and resulting multi-terminal'
COM '60186-60199 and 60186-60221 is the tower outage D,F'
TRIP LINE FROM BUS 60186 TO BUS 60199 CKT 1
TRIP LINE FROM BUS 60186 TO BUS 60221 CKT 1
END
CONTINGENCY '022 8'
COM 'Tower outage resulting in multi-terminal outage'
COM '60199-60221 and 60186-60221 is the tower outage E,F'
TRIP LINE FROM BUS 60186 TO BUS 60221 CKT 1
TRIP LINE FROM BUS 60199 TO BUS 60221 CKT 1
COM 'Also trips the following because of E where'
```

```
COM 'E is the same as MTL G'
TRIP LINE FROM BUS 60221 TO BUS 60222 CKT 10
END
CONTINGENCY '022 9'
COM 'Multi-terminal trip of I and J'
TRIP LINE FROM BUS 60202 TO BUS 60221 CKT 1
TRIP LINE FROM BUS 60221 TO BUS 60222 CKT 10
END
CONTINGENCY '022 10'
COM 'Multi-terminal trip of M and N'
TRIP LINE FROM BUS 60202 TO BUS 60251 CKT 1 /*Coon Crk to Terminal
TRIP LINE FROM BUS 60251 TO BUS 61491 CKT 9
TRIP LINE FROM BUS 61491 TO BUS 60252 CKT 9
TRIP LINE FROM BUS 61491 TO BUS 61188 CKT 9
END
CONTINGENCY '022 11'
COM 'Multi-terminal trip of G and H'
TRIP LINE FROM BUS 60199 TO BUS 60221 CKT 1
TRIP LINE FROM BUS 60221 TO BUS 60222 CKT 10
END
CONTINGENCY '022 12'
COM 'Multi-terminal trip of K and L'
TRIP LINE FROM BUS 60221 TO BUS 60251 CKT 1 /*Kholman Lk to Terminal
TRIP LINE FROM BUS 60251 TO BUS 61492 CKT 10
TRIP LINE FROM BUS 61492 TO BUS 60252 CKT 10
TRIP LINE FROM BUS 61492 TO BUS 61187 CKT 10
END
CONTINGENCY '022 13'
COM 'Multi-terminal trip of transformer R S and T'
COM 'represents a 3 winding transformer vld sgl'
COM 'Chisago Co. 500/345/34.5 kV transformer'
TRIP LINE FROM BUS 60199 TO BUS 61493 CKT 10
TRIP LINE FROM BUS 60653 TO BUS 61493 CKT 10
TRIP LINE FROM BUS 60197 TO BUS 61493 CKT 10
END
CONTINGENCY '022 14'
COM 'Multi-terminal trip of transformer W X and Y'
COM 'represents a 3 winding transformer vld sgl'
COM 'Chisago Co. 500/345/34.5 kV transformer'
TRIP LINE FROM BUS 60197 TO BUS 61494 CKT 9
TRIP LINE FROM BUS 60199 TO BUS 61494 CKT 9
TRIP LINE FROM BUS 60654 TO BUS 61494 CKT 9
END
COM ' '
COM ' '
COM ' SINGLES AND SINGLE PRIORS THAT REQUIRE D.C. RED'
COM ' '
COM '  End Of Outages That Cause DC or Unit runback'
COM ' '
COM ' '
COM ' '
COM ' '
COM ' '
COM ' '
COM ' START DAKOTA AREA CONTINGENCIES'
COM ' '
COM ' '
COM ' '
CONTINGENCY 'SINGLE-046'
COM  Center-Coyote 345 kV,
COM * IF MORE THAN 225 MW NET ON UNIT
COM * TRIP LINE AND UNIT
COM * CASE SHOWS 400 MW NET ON UNIT
COM 'TRIP LINE FROM BUS  66791 TO BUS  67316 CKT  1 GNRED'
COM 'TRIP UNIT      BUS  67316 TO BUS  67315 CKT  1'
TRIP LINE FROM BUS  66791 TO BUS  67316 CKT  1
TRIP LINE FROM BUS  67316 TO BUS  67315 CKT  1
END
COM '99 CROSS TRIP FOR TIOGA-LOGAN 230KV LINE OF THE TIOGA'
COM ' 115/230 TRANSFORMER.  NOT VALID UNTIL THE B10T FLOW'
COM ' TOWARD THE SOUTH IS OVER 100MW'
```

```
COM '-------------------------------------------------------'
CONTINGENCY '99'
TRIP LINE FROM BUS 67104 TO BUS 67108 CKT 1
TRIP LINE FROM BUS 67104 TO BUS 67385 CKT 1
END
COM '100  Defined as multi-terminal, wapa/otp'
COM 'A 66431-63267 DEVILSL7-DEVIL J7 CKT 1   OPENS  B C D
COM 'B 63267-63268 DEVIL J7-DEVIL S7 CKT 1   OPENS  A C D
COM 'C 63267-63265 DEVIL J7-DEVILSE7 CKT 1   OPENS  A B D
COM 'D 63265-63266 DEVILSE7-RAMSEY 7 CKT 1   OPENS  A B C
COM ' '
COM 'This outage will island out Sweetwater to'
COM 'Loma Jct to Langdon 115kV line sections'
COM 'Not shown in the outage.'
COM '-------------------------------------------------------'
CONTINGENCY '100'
TRIP LINE FROM BUS 66431 TO BUS 63267 CKT 1
TRIP LINE FROM BUS 63267 TO BUS 63268 CKT 1
TRIP LINE FROM BUS 63267 TO BUS 63265 CKT 1
TRIP LINE FROM BUS 63265 TO BUS 63266 CKT 1
END
COM '105  Defined as multi-circuit, tower'
COM 'A 66426-66441 BISMARK4-GARRISN4 CKT 1   OPENS   B or C  tower'
COM 'B 66426-66456 BISMARK4-WASHBRN4 CKT 1   OPENS   A tower, MTL 1 '
COM 'C 66441-67106 GARRISN4-LELANDO4 CKT 1   OPENS   A tower'
COM '**    Defined as multi-terminal'
COM 'D 66426-66456 BISMARK4-WASHBRN4 CKT 1   OPENS   E  MTL'
COM 'E 66456-67106 WASHBRN4-LELANDO4 CKT 1   OPENS   D  MTL'
COM '-------------------------------------------------------'
CONTINGENCY '105 1'
COM 'Tower with multi-terminal'
TRIP LINE FROM BUS 66426 TO BUS 67283 CKT 1
TRIP LINE FROM BUS 67283 TO BUS 66441 CKT 1
TRIP LINE FROM BUS 66441 TO BUS 67106 CKT 1
COM 'Also trips the following because of B'
TRIP LINE FROM BUS 66426 TO BUS 66456 CKT 1
TRIP LINE FROM BUS 66456 TO BUS 67106 CKT 1
END
CONTINGENCY '105 2'
COM 'Tower only'
TRIP LINE FROM BUS 66426 TO BUS 67283 CKT 1
TRIP LINE FROM BUS 67283 TO BUS 66441 CKT 1
TRIP LINE FROM BUS 66441 TO BUS 67106 CKT 1
END
CONTINGENCY '105 3'
COM 'Multi-terminal only'
TRIP LINE FROM BUS 66426 TO BUS 66456 CKT 1
TRIP LINE FROM BUS 66456 TO BUS 67106 CKT 1
END
COM '110  Defined as multi-circuit, tower'
COM 'A 66503-66530 BLAIR  4-WATERTN4 CKT 1   OPENS  B        tower'
COM 'B 66530-66550 WATERTN4-GRANITF4 CKT 1   OPENS  A or C   tower'
COM 'C 66503-66550 BLAIR  4-GRANITF4 CKT 1   OPENS  B        tower'
COM '-------------------------------------------------------'
CONTINGENCY '110 1'
TRIP LINE FROM BUS 66503 TO BUS 66530 CKT 1
TRIP LINE FROM BUS 66530 TO BUS 66550 CKT 1
END
CONTINGENCY '110 2'
TRIP LINE FROM BUS 66530 TO BUS 66550 CKT 1
TRIP LINE FROM BUS 66503 TO BUS 66550 CKT 1
END
COM '120   Defined as multi-circuit, tower'
COM 'A 66504-66531 BROOKNG7-WATERTN7 CKT 1   OPENS  B    tower'
COM 'B 66529-66537 WATERTN3-WHITE  3 CKT 1   OPENS  A    tower'
COM '-------------------------------------------------------'
CONTINGENCY '120'
TRIP LINE FROM BUS 66504 TO BUS 66531 CKT 1
TRIP LINE FROM BUS 66529 TO BUS 66537 CKT 1
END
COM '108   Defined as multi-circuit, tower'
```

```
COM 'A 66507-66509 FTTHOMP4-FTRANDL4   OPENS  B or C  tower'
COM 'B 66507-66516 FTTHOMP4-LAKPLAT4   OPENS  A       tower'
COM 'C 66509-66516 FTRANDL4-LAKPLAT4   OPENS  A       tower'
COM 'D 63041-63381 COAL CR4-UNDERWD4   OPENS  '
COM '-------------------------------------------------------'
CONTINGENCY '108 1'
TRIP LINE FROM BUS 66507 TO BUS 66509 CKT 1
TRIP LINE FROM BUS 66507 TO BUS 66516 CKT 1
TRIP LINE FROM BUS 63041 TO BUS 63381 CKT 1
END
CONTINGENCY '108 2'
TRIP LINE FROM BUS 66507 TO BUS 66509 CKT 1
TRIP LINE FROM BUS 66509 TO BUS 66516 CKT 1
TRIP LINE FROM BUS 63041 TO BUS 63381 CKT 1
END
COM '130  Defined as multi-circuit, tower'
COM 'A 66507-66523  FTTHOMP4-SIOUXFL4   OPENS  BorCorD  tower'
COM 'B 66507-67122  FTTHOMP4-STORLA 4   OPENS  A        tower, MTL'
COM 'C 66513-67122  HANLON 4-STORLA 4   OPENS  A        tower, MTL'
COM 'D 66513-66523  HANLON 4-SIOUXFL4   OPENS  A        tower'
COM '**    Defined as multi-terminal, MTL'
COM 'E 66507-67122  FTTHOMP4-STORLA 4   OPENS  F G'
COM 'F 66513-67122  HANLON 4-STORLA 4   OPENS  E G'
COM 'G 67122-67123  STORLA 4-STORLA 7      VLD SGL'
COM '-------------------------------------------------------'
CONTINGENCY '130 1'
TRIP LINE FROM BUS 66507 TO BUS 66523 CKT 1
TRIP LINE FROM BUS 66507 TO BUS 67122 CKT 1
COM 'Also trips the following because of B mtl'
TRIP LINE FROM BUS 66507 TO BUS 67122 CKT 1
TRIP LINE FROM BUS 66513 TO BUS 67122 CKT 1
TRIP LINE FROM BUS 67122 TO BUS 67123 CKT 1
END
CONTINGENCY '130 2'
TRIP LINE FROM BUS 66507 TO BUS 66523 CKT 1
TRIP LINE FROM BUS 66513 TO BUS 66523 CKT 1
END
COM '140  Defined as multi-circuit, tower'
COM 'A 66507-66514  FTTHOMP4-HURON  4  1   OPENS  B     tower'
COM 'B 66507-66514  FTTHOMP4-HURON  4  2   OPENS  A     tower'
COM '-------------------------------------------------------'
CONTINGENCY '140'
TRIP LINE FROM BUS 66507 TO BUS 66514 CKT 1
TRIP LINE FROM BUS 66507 TO BUS 66514 CKT 2
END
COM '150  Defined as multi-circuit, tower'
COM 'A 66507-66519  FTTHOMP4-OAHE   4  1   OPENS  B     tower'
COM 'B 66507-66519  FTTHOMP4-OAHE   4  2   OPENS  A     tower'
COM '-------------------------------------------------------'
CONTINGENCY '111'
TRIP LINE FROM BUS 66507 TO BUS 66519 CKT 1
TRIP LINE FROM BUS 66507 TO BUS 66519 CKT 2
END
COM '150  Defined as multi-circuit'
COM 'A 66507-66519  FTTHOMP4-OAHE   4  3   OPENS  B     tower'
COM 'B 66507-66519  FTTHOMP4-OAHE   4  4   OPENS  A     tower'
COM '-------------------------------------------------------'
CONTINGENCY '150'
TRIP LINE FROM BUS 66507 TO BUS 66519 CKT 3
TRIP LINE FROM BUS 66507 TO BUS 66519 CKT 4
END
COM '160  Defined as multi-circuit, tower'
COM 'A 66509-66565  FTRANDL4-SIOUXCY4   OPENS  BorCorD  tower'
COM 'B 66509-66526  FTRANDL4-UTICAJC4   OPENS  A        tower, MTL'
COM 'C 66526-66536  UTICAJC4-RASMUSN4   OPENS  A        tower, MTL'
COM 'D 66536-66565  RASMUSN4-SIOUXCY4   OPENS  A        tower'
COM '**    Defined as multi-terminal'
COM 'E 66509-66526  FTRANDL4-UTICAJC4   OPENS  F G'
COM 'F 66526-66523  UTICAJC4-SIOUXFL4   OPENS  E G'
COM 'G 66526-66536  UTICAJC4-RASMUSN4   OPENS  E F'
COM '-------------------------------------------------------'
```

```
CONTINGENCY '160 1'
TRIP LINE FROM BUS 66509 TO BUS 66565 CKT 1
TRIP LINE FROM BUS 66509 TO BUS 66526 CKT 1
COM 'Also trips the following because of B'
TRIP LINE FROM BUS 66526 TO BUS 66536 CKT 1
TRIP LINE FROM BUS 66523 TO BUS 66398 CKT 1
TRIP LINE FROM BUS 66398 TO BUS 66399 CKT 1
TRIP LINE FROM BUS 66398 TO BUS 66526 CKT 1
END
CONTINGENCY '160 2'
TRIP LINE FROM BUS 66509 TO BUS 66565 CKT 1
TRIP LINE FROM BUS 66536 TO BUS 66565 CKT 1
END
CONTINGENCY '160 3'
TRIP LINE FROM BUS 66509 TO BUS 66526 CKT 1
TRIP LINE FROM BUS 66523 TO BUS 66398 CKT 1
TRIP LINE FROM BUS 66398 TO BUS 66399 CKT 1
TRIP LINE FROM BUS 66398 TO BUS 66526 CKT 1
TRIP LINE FROM BUS 66526 TO BUS 66536 CKT 1
END
COM '170  Defined as multi-circuit, tower'
COM 'A 66514-66530  HURON  4-WATERTN4  1   OPENS  B   tower'
COM 'B 66514-66530  HURON  4-WATERTN4  2   OPENS  A   tower'
COM '-------------------------------------------------------'
CONTINGENCY '170 '
TRIP LINE FROM BUS 66514 TO BUS 66530 CKT 1
TRIP LINE FROM BUS 66514 TO BUS 66530 CKT 2
END
COM '180 GRE Defined as multi-terminal tower'
COM 'multi-terminal trips A B and C'
COM 'A 63041-63042 COAL CR4-COAL TP4 OPENS B, C'
COM 'B 63042-63049 COAL TP4-STANTON4 OPENS A, C'
COM 'C 63042-63044 COAL TP4-MCHENRY4 OPENS A, B'
COM '-------------------------------------------------------'
CONTINGENCY '180 1'
COM 'mtl outage portion'
TRIP LINE FROM BUS 63041 TO BUS 63042 CKT 1
TRIP LINE FROM BUS 63042 TO BUS 63049 CKT 1
TRIP LINE FROM BUS 63042 TO BUS 63044 CKT 1
END
COM '190 Defined as multi-terminal'
COM 'A 66436-66707  FARGO  7-CLDONIA7 CKT 1   OPENS B C D E F'
COM 'B 66707-66430  CALEDON7-EGF IND7 CKT 1   OPENS C C D E F'
COM 'C 66430-66443  EGF IND7-GRNDFKS7 CKT 1   OPENS A B D E F'
COM 'D 66772-66707  CALEDONT-CALEDON7 CKT 1   OPENS A B C E F'
COM 'E 66772-66777  CALEDONT-CALEDON9 CKT 1   OPENS A B C D F'
COM 'F 66772-67053  CALEDONT-CALEDON8 CKT 1   OPENS A B C D E'
COM '---------------------------------------------------------'
CONTINGENCY '190'
TRIP LINE FROM BUS 66436 TO BUS 66707 CKT 1
TRIP LINE FROM BUS 66707 TO BUS 66430 CKT 1
TRIP LINE FROM BUS 66430 TO BUS 66443 CKT 1
TRIP LINE FROM BUS 66772 TO BUS 66707 CKT 1
TRIP LINE FROM BUS 66772 TO BUS 66777 CKT 1
TRIP LINE FROM BUS 66772 TO BUS 67053 CKT 1
END
COM '200 Defined as multi-terminal'
COM 'A 66437-66759  GRNDFKS4-PICKERT4 CKT 1   OPENS B C D E'
COM 'B 66444-66759  JAMESTN4-PICKERT4 CKT 1   OPENS A C D E'
COM 'C 66759-63188  PICKERT4-PICKERTY CKT 1   OPENS A B D E'
COM 'D 63188-66923  PICKERTY-PICKERT8 CKT 1   OPENS A B C E'
COM 'E 63188-63167  PICKERTY-PICKERT9 CKT 1   OPENS A B C D'
COM '---------------------------------------------------------'
CONTINGENCY '200'
TRIP LINE FROM BUS 66437 TO BUS 66759 CKT 1
TRIP LINE FROM BUS 66444 TO BUS 66759 CKT 1
TRIP LINE FROM BUS 66759 TO BUS 63188 CKT 1
TRIP LINE FROM BUS 63188 TO BUS 66923 CKT 1
TRIP LINE FROM BUS 63188 TO BUS 63167 CKT 1
END
COM '210  Defined as multi-terminal'
```

```
COM 'A 66484-66488  NUNDRWD4-PHILTAP4  CKT 1   OPENS  B C'
COM 'B 66488-66519  PHILTAP4-OAHE   4  CKT 1   OPENS  A C'
COM 'C 66486-66488  PHILIP 4-PHILTAP4  CKT 1   OPENS  A B'
COM '-------------------------------------------------------'
CONTINGENCY '210'
TRIP LINE FROM BUS 66484 TO BUS 66488 CKT 1
TRIP LINE FROM BUS 66488 TO BUS 66519 CKT 1
TRIP LINE FROM BUS 66486 TO BUS 66488 CKT 1
END
COM '220  Defined as multi-terminal'
COM 'A 63358-63369 BUFFALO3-JAMESTN3   OPENS B C D E F G H I J K'
COM 'B 66792-63358 MAPLE R3-BUFFALO3   OPENS A C D E F G H I J K'
COM 'C 63358-63198 BUFFALO3-BUFFALOY   OPENS A B D E F G H I J K'
COM 'D 63198-63258 BUFFALOY-BUFFALO7   OPENS A B C E F G H I J K'
COM 'E 63198-63158 BUFFALOY-BUFFALO9   OPENS A B C D F G H I J K'
COM 'F 66792-63189 MAPLE R3-MAPLER1Y   OPENS A B C D E G H I J K'
COM 'G 63189-66754 MAPLER1Y-MAPLE R4   OPENS A B C D E F H I J K'
COM 'H 63189-63359 MAPLER1Y-MAPLER19   OPENS A B C D E F G I J K'
COM 'I 66792-63190 MAPLE R3-MAPLER2Y   OPENS A B C D E F G H J K'
COM 'J 63190-66754 MAPLER2Y-MAPLE R4   OPENS A B C D E F G H I K'
COM 'K 63190-63360 MAPLER2Y-MAPLER29   OPENS A B C D E F G H I J'
COM '-------------------------------------------------------'
CONTINGENCY '220'
TRIP LINE FROM BUS 63358 TO BUS 63369 CKT 1
TRIP LINE FROM BUS 66792 TO BUS 63358 CKT 1
TRIP LINE FROM BUS 63358 TO BUS 63198 CKT 1
TRIP LINE FROM BUS 63198 TO BUS 63258 CKT 1
TRIP LINE FROM BUS 63198 TO BUS 63158 CKT 1
TRIP LINE FROM BUS 66792 TO BUS 63189 CKT 1
TRIP LINE FROM BUS 63189 TO BUS 66754 CKT 1
TRIP LINE FROM BUS 63189 TO BUS 63359 CKT 1
TRIP LINE FROM BUS 63190 TO BUS 66754 CKT 1
TRIP LINE FROM BUS 66792 TO BUS 63190 CKT 1
TRIP LINE FROM BUS 63190 TO BUS 63360 CKT 1
END
COM '230  Defined as multi-terminal, OTP'
COM 'A 63363-63327  FORMAN 4-HANKSON4   OPENS  B C D'
COM 'B 63363-63362  FORMAN 4-OAKS   4   OPENS  A C D'
COM 'C 67326-63362  ELLENDL4-OAKS   4   OPENS  A B D'
COM 'D 63362-63162  OAKS   4-OAKS   9   OPENS  A B C'
COM 'A,B,C,D, MTL isolates the Forman 3 winding transformer'
COM 'on the high side (230kV) only.  The 115/41.6kV remains'
COM 'connected.'
COM 'E 63363-63193  FORMAN 4-FORMAN Y   OPENS  VLD SGL'
COM '-------------------------------------------------------'
CONTINGENCY '230'
COM 'Trip of the 230kV line sections and Forman'
COM 'transformer 230kV high side only.'
TRIP LINE FROM BUS 63363 TO BUS 63327 CKT 1
TRIP LINE FROM BUS 63363 TO BUS 63362 CKT 1
TRIP LINE FROM BUS 67326 TO BUS 63362 CKT 1
TRIP LINE FROM BUS 63362 TO BUS 63162 CKT 1
TRIP LINE FROM BUS 63363 TO BUS 63193 CKT 1
END
COM '240  Defined as multi-terminal, wapa/otp'
COM 'A 63263-63262  FORMN  7-GWINNER7 CKT 1   OPENS B C D E F G'
COM 'B 63262-63298  GWINNER7-HOVINGJ7 CKT 1   OPENS A C D E F G'
COM 'C 63298-63299  HOVINGJ7-HOVINGJ9 CKT 1   OPENS A B D E F G'
COM 'D 63298-63261  HOVINGJ7-LISBON 7 CKT 1   OPENS A B C E F G'
COM 'E 63261-63260  LISBON 7-ENDERLN7 CKT 1   OPENS A B C D F G'
COM 'F 63259-63260  ALICE  7-DNDERLN7 CKT 1   OPENS A B C D E G'
COM 'G 63258-63259  BUFFALO7-ALICE  7 CKT 1   OPENS A B C D E F'
COM '-------------------------------------------------------'
CONTINGENCY '240'
COM ' Line 63260 - 63259 is normally open in the summer'
COM ' which allows for the MTL below'
TRIP LINE FROM BUS 63258 TO BUS 63259 CKT 1
TRIP LINE FROM BUS 63259 TO BUS 63260 CKT 1
TRIP LINE FROM BUS 63260 TO BUS 63261 CKT 1
TRIP LINE FROM BUS 63261 TO BUS 63298 CKT 1
TRIP LINE FROM BUS 63298 TO BUS 63299 CKT 1
```

```
TRIP LINE FROM BUS 63298 TO BUS 63262 CKT 1
TRIP LINE FROM BUS 63262 TO BUS 63263 CKT 1
END
COM '250  GRE Defined as multi-terminal line, upa/otp'
COM 'A 66755-63047 PRAIRIE4-RAMSEY 4   VLD SGL'
COM 'B 63056-63047 BALTAJCT-RAMSEY 4   VLD SGL'
COM 'C 63266-63084 RAMSEY 7-RAMSEY Y   OPENS A B D E'
COM 'D 63047-63084 RAMSEY 4-RAMSEY Y   OPENS A B C E'
COM 'E 63084-63077 RAMSEY Y-RAMSEY T   OPENS A B C D'
COM '-------------------------------------------------------'
CONTINGENCY '250'
COM 'Transformer fault at Ramsey, mtl'
TRIP LINE FROM BUS 66755 TO BUS 63047 CKT 1
TRIP LINE FROM BUS 63056 TO BUS 63047 CKT 1
TRIP LINE FROM BUS 63266 TO BUS 63047 CKT 1
END
COM '260  GRE Defined as multi-terminal line'
COM 'A 63044-63056 MCHENRY4-BALTAJCT   OPENS B C'
COM 'B 63042-63044 COAL TP4-MCHENRY4   OPENS '
COM 'C 63044-63082 MCHENRY4-MCHENRYY   OPENS A B D E'
COM 'D 60140-63082 MCHENRY7-MCHENRYY   OPENS A B C E'
COM 'E 63082-63080 MCHENRYY-MCHENRYT   OPENS A B C D'
COM '-------------------------------------------------------'
CONTINGENCY '260'
TRIP LINE FROM BUS 63044 TO BUS 63056  CKT 1
TRIP LINE FROM BUS 63042 TO BUS 63044  CKT 1
TRIP LINE FROM BUS 63044 TO BUS 60140  CKT 1
END
COM ' '
COM ' '
COM ' '
COM '  END DAKOTA AREA CONTINGENCIES'
COM ' '
COM ' '
COM ' '
COM ' '
COM '  START NEBRASKA AREA CONTINGENCIES'
COM ' '
COM ' '
COM ' END NEBRASKA AREA CONTINGENCIES'
COM ' '
COM ' '
COM ' '
COM ' '
COM ' '
COM ' '
COM ' START MINNESOTA AREA CONTINGENCIES'
COM ' '
COM ' '
COM ' 501 Defined as multi-terminal, Drayton Transformer 1 TRIP'
COM 'A 66752-66787  DRAYTON4-DRAYTO1T CKT 1    OPENS B C'
COM 'B 66705-66787  DRAYTON7-DRAYTO1T CKT 1    OPENS A C'
COM 'C 66763-66787  DRAYTO19-DRAYTO1T CKT 1    0PENS A B'
COM '-------------------------------------------------------'
CONTINGENCY '501 1'
COM 'Trip Transformer 1'
TRIP LINE FROM BUS 66752 TO BUS 66787 CKT 1
TRIP LINE FROM BUS 66705 TO BUS 66787 CKT 1
TRIP LINE FROM BUS 66763 TO BUS 66787 CKT 1
END
COM ' The Drayton bus was updated with a ring bus.  The 2'
COM ' transformer trip/outage no longer open ends the 230kV line.'
COM ' 502 Defined as multi-terminal, Drayton Transformer 2 TRIP'
COM 'A 66752-66788  DRAYTON4-DARYTO2T CKT 1    OPENS B C'
COM 'B 66705-66788  DRAYTON7-DRAYTO2T CKT 1    OPENS A C'
COM 'C 66762-66788  DRAYTO29-DRAYTO2T CKT 1    OPENS A B'
COM '-------------------------------------------------------'
CONTINGENCY '502 2'
COM 'Trip Transformer 2'
TRIP LINE FROM BUS 66752 TO BUS 66788 CKT 1
TRIP LINE FROM BUS 66705 TO BUS 66788 CKT 1
```

```
TRIP LINE FROM BUS 66762 TO BUS 66788 CKT 1
END
COM '500      GRE Defined as multi-terminal line'
COM 'A 66550-63050 GRANITF4-WILLMAR4   OPENS B'
COM 'B 63050-62427 WILLMAR4-WILLMAR8 OPENS A'
COM '-------------------------------------------------------'
CONTINGENCY '500'
TRIP LINE FROM BUS 66550 TO BUS 63050 CKT 1
TRIP LINE FROM BUS 63050 TO BUS 62427 CKT 1
END
COM '505  Defined as multi-circuit, NSP'
COM 'A 66551-66508 GRANITF7-S3     7 CKT 1   OPENS B C'
COM 'B 66552-66508 MARS ER7-S3     7 CKT 1   OPENS A C'
COM 'B 60170-66508 MARSHAL7-S3     7 CKT 1   OPENS A B'
COM '-------------------------------------------------------'
CONTINGENCY '505'
TRIP LINE FROM BUS 66551 TO BUS 66508 CKT 1
TRIP LINE FROM BUS 66552 TO BUS 66508 CKT 1
TRIP LINE FROM BUS 60170 TO BUS 60371 CKT 1
TRIP LINE FROM BUS 60371 TO BUS 66508 CKT 1
END
COM '510  Defined as multi-terminal'
COM 'A 66550-66554  GRANITF4-MORRIS 4 CKT 1   OPENS  B C'
COM 'B 66554-66555  MORRIS 4-MORRIS 7 CKT 1   OPENS  A C'
COM 'C 66553-66554  MOORHED4-MORRIS 4 CKT 1   VLD SGL'
COM '-------------------------------------------------------'
CONTINGENCY '510'
TRIP LINE FROM BUS 66550 TO BUS 66554 CKT 1
TRIP LINE FROM BUS 66554 TO BUS 66555 CKT 1
TRIP LINE FROM BUS 66553 TO BUS 66554 CKT 1
END
COM '515   Defined as multi-terminal'
COM 'A 66717-63237  ULRICH 7-MAHNOMN7 CKT 1   OPENS  B C D E F'
COM 'B 63236-66717  ADUBON 7-ULRICH 7 CKT 1   OPENS  A C D E F'
COM 'C 63237-63238  MAHNOMN7-WINGER 7 CKT 1   OPENS  A B D E F'
COM 'D 66717-66781  ULRICH 7-ULRICH T CKT 1   OPENS  A B C E F'
COM 'E 66781-67039  ULRICH T-ULRICH 8 CKT 1   OPENS  A B C D F'
COM 'F 66781-66773  ULRICH T-ULRICH 9 CKT 1   OPENS  A B C D E'
COM '---------------------------------------------------------'
CONTINGENCY '515'
TRIP LINE FROM BUS 66717 TO BUS 63237 CKT 1
TRIP LINE FROM BUS 63236 TO BUS 66717 CKT 1
TRIP LINE FROM BUS 63237 TO BUS 63238 CKT 1
TRIP LINE FROM BUS 66717 TO BUS 66781 CKT 1
TRIP LINE FROM BUS 66781 TO BUS 67039 CKT 1
TRIP LINE FROM BUS 66781 TO BUS 66773 CKT 1
END
COM '520  Defined as multi-terminal'
COM 'A 66710-63246 NARY   7-BEMIDJI7 CKT 1   OPENS  B C D E F G I J'
COM 'B 66710-63247 NARY   7-CASS LK7 CKT 1   OPENS  A C D E F G I J'
COM 'C 63247-63248 CASS LK7-CASS N 7 CKT 1   OPENS  I J'
COM 'D 66710-66716 NARY   7-LAPORTE7 CKT 1   OPENS  A B C E F G I J'
COM 'E 66716-61640 LAPORTE7-BADOURA7 CKT 1   OPENS  A B C D F G I J'
COM 'F 63247-63197 CASS LK7-CASS LKY CKT 1   OPENS  G '
COM 'G 63197-63347 CASS LKY-CASS LK8 CKT 1   OPENS  F'
COM 'I 63247-63349 CASS LK7-CASSPIP9 CKT 1   OPENS  C J'
COM 'J 63248-63348 CASS N 7-NO PIPE9 CKT 1   OPENS  C I'
COM '-------------------------------------------------------'
CONTINGENCY '520 1'
COM ' Trip of A or B, or D or E, trips all, mtl'
TRIP LINE FROM BUS 66710 TO BUS 63246 CKT 1
TRIP LINE FROM BUS 66710 TO BUS 63247 CKT 1
TRIP LINE FROM BUS 63247 TO BUS 63248 CKT 1
TRIP LINE FROM BUS 66710 TO BUS 66716 CKT 1
TRIP LINE FROM BUS 66716 TO BUS 61638 CKT 1
TRIP LINE FROM BUS 61638 TO BUS 61640 CKT 1
TRIP LINE FROM BUS 63247 TO BUS 63197 CKT 1
TRIP LINE FROM BUS 63197 TO BUS 63347 CKT 1
TRIP LINE FROM BUS 63247 TO BUS 63349 CKT 1
TRIP LINE FROM BUS 63248 TO BUS 63348 CKT 1
END
```

```
CONTINGENCY '520 2'
COM ' Trip of C or I or J OPENS each other'
COM ' Transformers connected to bus via fault'
COM ' switch device'
TRIP LINE FROM BUS 63247 TO BUS 63248 CKT 1
TRIP LINE FROM BUS 63247 TO BUS 63349 CKT 1
TRIP LINE FROM BUS 63248 TO BUS 63348 CKT 1
END
CONTINGENCY '520 3'
COM ' Trip of F or G   OPENS each other'
COM ' Transformers connected to bus via fault'
COM ' switch device'
TRIP LINE FROM BUS 63247 TO BUS 63197 CKT 1
TRIP LINE FROM BUS 63197 TO BUS 63347 CKT 1
END
COM '525  Defined as multi-circuit, tower'
COM 'A 60117-60132  CHERRYC7-WSX FLS7 CKT 1   OPENS  B   tower'
COM 'B 60129-60132  SPLT RK7-WSX FLS7 CKT 1   OPENS  A   tower'
COM '-------------------------------------------------------'
CONTINGENCY '525 1'
TRIP LINE FROM BUS 60117 TO BUS 60132 CKT 1
TRIP LINE FROM BUS 60129 TO BUS 60132 CKT 1
END
COM '530  Defined as multi-circuit'
COM 'A 60119-60171  LKYNKTN7-MARSHTP7 CKT 1   OPENS B C D'
COM 'B 60148-60171  MINVALY4-MARSHTP7 CKT 1   OPENS A C D'
COM 'C 60170-60171  MARSHAL7-MARSHTP7 CKT 1   OPENS A B'
COM 'D 60119-60853 LKYNKTN7-LK YANK8 CKT 1   OPENS A B C'
COM '-------------------------------------------------------'
CONTINGENCY '530'
TRIP LINE FROM BUS 60119 TO BUS 60171 CKT 1
TRIP LINE FROM BUS 60148 TO BUS 60171 CKT 1
TRIP LINE FROM BUS 60170 TO BUS 60171 CKT 1
TRIP LINE FROM BUS 60119 TO BUS 60853 CKT 2
END
COM '535  Defined as multi-circuit tower and mtl'
COM 'A 60134-60135  SHEYNNE7-CASS CO7 CKT 1   OPENS  B,C tower only'
COM 'B 66761-60134  MODEROW7-SHEYNNE7 CKT 1   OPENS  A,C, also mtl'
COM 'C 66761-60135  MODEROW7-CASS CO7 CKT 1   OPENS  A,B, also mtl'
COM '**    Defined as multi-terminal'
COM 'E 60135-60137  CASS CO7-REDRIVR7 CKT 1   OPENS  D,F'
COM 'F 60135-66761  CASS CO7-MODEROW7 CKT 1   OPENS  D,E'
COM 'G 66761-60134  MODEROW7-SHEYNNE7 CKT 1   OPENS E,F,'
COM '-------------------------------------------------------'
CONTINGENCY '535 1'
COM 'Tower contingency of Sheyenne-Cass Co.,Moderow-Sheyenne'
COM 'and Moderow-Cass Co. 115kV lines. With combination mtl'
COM 'portion.'
TRIP LINE FROM BUS 60134 TO BUS 60135 CKT 2
TRIP LINE FROM BUS 66761 TO BUS 60134 CKT 1
TRIP LINE FROM BUS 66761 TO BUS 60135 CKT 1
COM 'Also trips the following MTL because of C'
TRIP LINE FROM BUS 60135 TO BUS 60137 CKT 1
END
CONTINGENCY '535 2'
COM ' Multi-terminal only'
TRIP LINE FROM BUS 60135 TO BUS 60137 CKT 1
TRIP LINE FROM BUS 60135 TO BUS 66761  CKT 1
TRIP LINE FROM BUS 66761 TO BUS 60134 CKT 1
END
COM '*******************************************************'
COM `CONTINGENCY 540 IS NO LONGER A MULTI-TERMINAL CONTINGENCY'
COM ` BREAKERS WERE' ADDED AT AUDUBON - REMOVE CONTINGENCY 540'
COM ' FROM THE LIST'
COM '540  Defined as multi-terminal'
COM 'A 60133-63336  SHEYNNE4-AUDUBON4 CKT 1   OPENS  B C D E F G H'
COM 'B 63336-63053  AUDUBON4-HUBBARD4 CKT 1   OPENS  A C D E F G H'
COM 'C 60133-60134  SHEYNNE4-SHEYNNE7 CKT 1   OPENS  A B D E F G H'
COM 'D 60133-60134  SHEYNNE4-SHEYNNE7 CKT 1   OPENS  A B C E F G H'
COM 'E 63336-63136 AUDUBON4-AUDUBON9 CKT 1   OPENS  A B C D F G H'
COM 'F 63336-63202 AUDUBON4-AUDUBONY CKT 1   OPENS  A B C D E G H'
```

```
COM 'G 63202-63236   AUDUBONY-AUDUBON7 CKT 1   OPENS  A B C D E F H'
COM 'H 63202-63136 AUDUBONY-AUDUBON9 CKT 1   OPENS  A B C D E F G'
COM '-------------------------------------------------------'
COM `CONTINGENCY '540'
COM `TRIP LINE FROM BUS 60133 TO BUS 63336 CKT 1'
COM `TRIP LINE FROM BUS 63336 TO BUS 63053 CKT 1'
COM `TRIP LINE FROM BUS 60133 TO BUS 60134 CKT 1'
COM `TRIP LINE FROM BUS 60133 TO BUS 60134 CKT 2'
COM `TRIP LINE FROM BUS 63336 TO BUS 63136 CKT 1'
COM `TRIP LINE FROM BUS 63336 TO BUS 63202 CKT 1'
COM `TRIP LINE FROM BUS 63202 TO BUS 63236 CKT 1'
COM `TRIP LINE FROM BUS 63202 TO BUS 63136 CKT 1'
COM `END'
COM '*******************************************************'
COM '545  Defined as multi-terminal'
COM 'A 63325-63327   BROWNSV4-HANKSON4 CKT 1   OPENS  B C'
COM 'B 63314-63325   BIGSTON4-BROWNSV4 CKT 1   OPENS  A C'
COM 'C 63325-63125 BROWNSV4-BROWNSV9 CKT 1   OPENS  A B'
COM '-------------------------------------------------------'
CONTINGENCY '545'
TRIP LINE FROM BUS 63325 TO BUS 63327 CKT 1
TRIP LINE FROM BUS 63314 TO BUS 63325 CKT 1
TRIP LINE FROM BUS 63325 TO BUS 63125 CKT 1
END
COM '550-A  Defined as multi-terminal'
COM 'A 66555-63219  MORRIS 7-GRANTCO7 CKT 1   OPENS  B'
COM 'B 63219-63223  GRANTCO7-HOOT LK7 CKT 1   OPENS  A'
COM '-------------------------------------------------------'
CONTINGENCY '550'
TRIP LINE FROM BUS 66555 TO BUS 63219 CKT 1
TRIP LINE FROM BUS 63219 TO BUS 63223 CKT 1
END
COM '550-B  Defined as multi-terminal, otp'
COM 'A 63219-63220    GRANTCO7-ELBOWLK7 CKT 1   OPENS  B C D'
COM 'B 63220-63221    ELBOWLK7-BRANDN 7 CKT 1   OPENS  A C D'
COM 'C 63221-67452  BRANDN 7-ALEXSS   CKT 1   OPENS  A B D'
COM 'D 63221-67455  BRANDN 7-BRANDN 9 CKT 1   OPENS  A B C'
COM '-------------------------------------------------------'
CONTINGENCY '550-B'
TRIP LINE FROM BUS 63219 TO BUS 63220 CKT 1
TRIP LINE FROM BUS 63220 TO BUS 63221 CKT 1
TRIP LINE FROM BUS 63221 TO BUS 67452 CKT 1
TRIP LINE FROM BUS 63221 TO BUS 67455 CKT 1
END
COM '551     Defined as multi-terminal, otp'
COM 'A 67452-63222  ALEXSS  -ALEXAND7 CKT 1   OPENS  B'
COM 'B 63222-60144 ALEXAND7-DGLASCO7 CKT 1   OPENS  A'
COM '-------------------------------------------------------'
CONTINGENCY '551'
TRIP LINE FROM BUS 67452 TO BUS 63222 CKT 1
TRIP LINE FROM BUS 63222 TO BUS 60144 CKT 1
END
COM '552     Defined as multi-terminal, otp'
COM 'A 67452-67453 ALEXSS  -ALEXSWM  CKT 1   OPENS  B'
COM 'B 67453-67454 ALEXSWM -ALEXPLDM CKT 1   OPENS  A'
COM '-------------------------------------------------------'
CONTINGENCY '552'
TRIP LINE FROM BUS 67452 TO BUS 67453 CKT 1
TRIP LINE FROM BUS 67453 TO BUS 67454 CKT 1
END
COM '553     Defined as multi-terminal, otp'
COM 'A 67454-62527 ALEXPLDM-ELMO   7 CKT 1   OPENS  B'
COM 'B 62527-62531 ELMO   7-INMAN  7 CKT 1   OPENS  A'
COM '-------------------------------------------------------'
CONTINGENCY '553'
TRIP LINE FROM BUS 67454 TO BUS 62752 CKT 1
TRIP LINE FROM BUS 62527 TO BUS 62531 CKT 1
END
COM '560  Defined as multi-terminal'
COM 'A 63239-63238   BAGLEY 7-WINGER 7 CKT 1   OPENS  B C D E F G H I J K L'
COM 'B 63239-63243   BAGLEY 7-SHEVLIN7 CKT 1   OPENS  A C D E F G H I J K L'
```

```
COM 'C 63239-63241   BAGLEY 7-CLEARBR7 CKT 1   OPENS  A B D E F G H I J K L'
COM 'D 63243-63245   SHEVLIN7-WILTON 7 CKT 1   OPENS  A B C E F G H I J K L'
COM 'E 63243-66727   SHEVLIN7-RICELKT7 CKT 1   OPENS  A B C D F G H I J K L'
COM 'F 63241-63240   CLEARBR7-MN PIPE7 CKT 1   OPENS  A B C D E G H I J K L'
COM 'G 63241-63242   CLEARBR7-CLBKPIP7 CKT 1   OPENS  A B C D E F H I J K L'
COM 'H 66727-66729   RICELKT7-RICELAK7 CKT 1   OPENS  A B C D E F G I J K L'
COM 'I 66727-63244   RICELKT7-ITASKA 7 CKT 1   OPENS  A B C D E F G H J K L'
COM 'J 63240-63340 MN PIPE7-MN PIPE9 CKT 1   OPENS  F'
COM 'K 63242-63342 CLBKPIP7-CLBK LK9 CKT 1   OPENS  G'
COM 'L 63244-63344 ITASKA 7-ITASKA 9 CKT 1   OPENS  I'
COM '-------------------------------------------------------------'
CONTINGENCY '560 1'
COM 'Trip of A or B or C or D or E or F or'
COM 'G or H or I trip each other and J,K,L'
TRIP LINE FROM BUS 63239 TO BUS 63238 CKT 1
TRIP LINE FROM BUS 63239 TO BUS 63243 CKT 1
TRIP LINE FROM BUS 63239 TO BUS 63241 CKT 1
TRIP LINE FROM BUS 63245 TO BUS 63281 CKT 1
TRIP LINE FROM BUS 63281 TO BUS 63285 CKT 1
TRIP LINE FROM BUS 63285 TO BUS 63243 CKT 1
TRIP LINE FROM BUS 63243 TO BUS 63282 CKT 1
TRIP LINE FROM BUS 63282 TO BUS 66727 CKT 1
TRIP LINE FROM BUS 63241 TO BUS 63240 CKT 1
TRIP LINE FROM BUS 63241 TO BUS 63242 CKT 1
TRIP LINE FROM BUS 66727 TO BUS 66729 CKT 1
TRIP LINE FROM BUS 66727 TO BUS 63244 CKT 1
TRIP LINE FROM BUS 63240 TO BUS 63340 CKT 1
TRIP LINE FROM BUS 63242 TO BUS 63342 CKT 1
TRIP LINE FROM BUS 63244 TO BUS 63344 CKT 1
END
CONTINGENCY '560 2'
COM 'J trips E only'
TRIP LINE FROM BUS 63240 TO BUS 63340 CKT 1
TRIP LINE FROM BUS 63241 TO BUS 63240 CKT 1
END
CONTINGENCY '560 3'
COM 'K trips F only'
TRIP LINE FROM BUS 63242 TO BUS 63342 CKT 1
TRIP LINE FROM BUS 63241 TO BUS 63242 CKT 1
END
CONTINGENCY '560 4'
COM 'L trips I only'
TRIP LINE FROM BUS 63244 TO BUS 63344 CKT 1
TRIP LINE FROM BUS 66727 TO BUS 63244 CKT 1
END
COM '565 Defined as multi-terminal, mpl'
COM 'A 63246-63245   BEMIDJI7-WILTON 7  CKT 1   OPENS B C D E'
COM 'B 63245-63243   WILTON 7-SHEVLIN7  CKT 1   OPENS B C D E'
COM 'C 63245-66776 WILTON 7-WILTON T  CKT 1   OPENS A C D E'
COM 'D 66776-66968 WILTON T-WILTON 8  CKT 1   OPENS A B D E'
COM 'E 66776-63145 WILTON T-WILTON 9  CKT 1   OPENS A B C D'
COM '-------------------------------------------------------'
CONTINGENCY '565'
COM 'Multi-terminal with fault on Wilton to'
COM 'Bemidji 115 kV line.
TRIP LINE FROM BUS 63246 TO BUS 63245 CKT 1
TRIP LINE FROM BUS 63245 TO BUS 63281 CKT 1
TRIP LINE FROM BUS 63281 TO BUS 63285 CKT 1
TRIP LINE FROM BUS 63285 TO BUS 63243 CKT 1
TRIP LINE FROM BUS 63245 TO BUS 66776 CKT 1
TRIP LINE FROM BUS 66776 TO BUS 66968 CKT 1
TRIP LINE FROM BUS 66776 TO BUS 63145 CKT 1
END
COM '570  Defined as a multi-terminal'
COM 'A 66705-63255   DRAYTON7-DONALDS7  CKT 1   OPENS B C D E F G H'
COM 'B 63255-63256   DONALDS7-DONDPIP7  CKT 1   OPENS A C D E F G H'
COM 'C 63255-66718   DONALDS7-HALMA  7  CKT 1   see mtl 153'
COM 'D 63255-66714   DONALDS7-WARSAW 7  CKT 1   see mtl 156'
COM 'E 63255-63155 DONALDS7-DONALDS9  CKT 1   OPENS F'
COM 'F 63255-63155 DONALDS7-DONALDS9  CKT 2   OPENS E'
COM 'G 63256-63356 DONDPIP7-DON PIP9  CKT 1   OPENS B H'
```

```
COM 'H 63256-63356 DONDPIP7-DON PIP9  CKT 2   OPENS B G'
COM 'A and B will not cause additional lines in 575 or 580 to open'
COM 'Simulating trip of G or H is redundant to simulating trip'
COM 'of A or B'
COM '-------------------------------------------------------'
CONTINGENCY '570 1'
COM 'Trip of A or B OPENS all sections'
COM 'Trip of C and D are shown in 153 and 156 below'
TRIP LINE FROM BUS 66705 TO BUS 63255 CKT 1
TRIP LINE FROM BUS 63255 TO BUS 63256 CKT 1
TRIP LINE FROM BUS 63255 TO BUS 66718 CKT 1
TRIP LINE FROM BUS 63255 TO BUS 66714 CKT 1
TRIP LINE FROM BUS 63255 TO BUS 63155 CKT 1
TRIP LINE FROM BUS 63255 TO BUS 63155 CKT 2
TRIP LINE FROM BUS 63256 TO BUS 63356 CKT 1
TRIP LINE FROM BUS 63256 TO BUS 63356 CKT 2
END
CONTINGENCY '570 2'
COM 'Trip of E OPENS F only, paralell bank'
TRIP LINE FROM BUS 63255 TO BUS 63155 CKT 1
TRIP LINE FROM BUS 63255 TO BUS 63155 CKT 2
END
COM '575  Defined as multi-terminal'
COM 'A 63255-66718   DONALDS7-HALMA  7 CKT 1    OPENS  B C D E F G H'
COM 'B 66718-66708   HALMA  7-KARLSTD7 CKT 1    OPENS  A C D E F G H'
COM 'C 66708-63254   KARLSTD7-VIKING 7 CKT 1    OPENS  A B D E F G H'
COM 'D 63254-66713   VIKING 7-TRFALLS7 CKT 1    OPENS  A B C E F G H'
COM 'E 66708-66785 KARLSTD7-KARLSTDY CKT 1    OPENS  F G'
COM 'F 66785-66838 KARLSTDY-KARLSTD8 CKT 1    OPENS  E G'
COM 'G 66785-63156 KARLSTDY-KARLSTD9 CKT 1    OPENS  E F'
COM 'H 63254-63354 VIKING 7-VIK PIP9 CKT 1    OPENS  A B C D E F G'
COM '-------------------------------------------------------'
CONTINGENCY '575'
COM 'Trip of A or B or C or D or H will open all other sections.'
TRIP LINE FROM BUS 63255 TO BUS 66718 CKT 1
TRIP LINE FROM BUS 66718 TO BUS 66708 CKT 1
TRIP LINE FROM BUS 66708 TO BUS 63254 CKT 1
TRIP LINE FROM BUS 63254 TO BUS 66713 CKT 1
TRIP LINE FROM BUS 66708 TO BUS 66785 CKT 1
TRIP LINE FROM BUS 66785 TO BUS 66838 CKT 1
TRIP LINE FROM BUS 66785 TO BUS 63156 CKT 1
TRIP LINE FROM BUS 63254 TO BUS 63354 CKT 1
END
COM '576  Defined as multi-terminal'
COM 'A 66713-63253  TRFALLS7-PLUMPIP7 CKT 1    OPENS  B C D E F'
COM 'B 63253-63251  PLUMPIP7-PLUMTAP7 CKT 1    OPENS  A C D E F'
COM 'C 63251-63252  PLUMTAP7-PLUMMER7 CKT 1    OPENS  A B D E F'
COM 'D 63251-63238  PLUMTAP7-WINGER 7 CKT 1    OPENS  A B C E F'
COM 'E 63253-63353  PLUMPIP7-PLUMPIP9 CKT 1    OPENS  F'
COM 'F 63253-63353  PLUMPIP7-PLUMPIP9 CKT 2    OPENS  E'
COM '-------------------------------------------------------'
CONTINGENCY '576'
COM 'Trip of A or B or C or D will open all other sections.'
TRIP LINE FROM BUS 66713 TO BUS 63253 CKT 1
TRIP LINE FROM BUS 63253 TO BUS 63251 CKT 1
TRIP LINE FROM BUS 63251 TO BUS 63252 CKT 1
TRIP LINE FROM BUS 63251 TO BUS 63238 CKT 1
TRIP LINE FROM BUS 63253 TO BUS 63353 CKT 1
TRIP LINE FROM BUS 63253 TO BUS 63353 CKT 2
END
COM '580  Defined as multi-terminal'
COM 'A 66706-66722  FALCONR7-OSLO   7 CKT 1   OPENS  B C D E F G'
COM 'B 66722-66714  OSLO   7-WARSAW 7 CKT 1   OPENS  A C D E F G'
COM 'C 66714-63255  WARSAW 7-DONALDS7 CKT 1   OPENS  A B D E F G'
COM 'D 66722-66713  OSLO   7-TRFALLS7 CKT 1   OPENS  A B C E F G'
COM 'E 66775-66714  WARSAW T-WARSAW 7 CKT 1   OPENS  F G'
COM 'F 66775-66834  WARSAW T-WARSAW 8 CKT 1   OPENS  E G'
COM 'G 66775-66774  WARSAW T-WARSAW 9 CKT 1   OPENS  E F'
COM ' See mtl FFF below'
COM '-------------------------------------------------------'
CONTINGENCY '585'
```

```
TRIP LINE FROM BUS 66443 TO BUS 66706 CKT 1
TRIP LINE FROM BUS 66706 TO BUS 66722 CKT 1
TRIP LINE FROM BUS 66706 TO BUS 63249 CKT 1
END
COM '590  Defined as multi-terminal'
COM 'A 63214-63213   BIGSTON7-MARIETT7 CKT 1   OPENS  B C D E'
COM 'B 63213-63212   MARIETT7-BURR   7 CKT 1   OPENS  A C D E'
COM 'C 63212-63211   BURR   7-CANBY  7 CKT 1   OPENS  A B D E'
COM 'D 63212-63210   BURR   7-TORONTO7 CKT 1   OPENS  A B C E'
COM 'E 63213-63113 MARIETT7-MARIETT9 CKT 1   OPENS  A B C D'
COM '-------------------------------------------------------'
CONTINGENCY '590'
TRIP LINE FROM BUS 63214 TO BUS 63213 CKT 1
TRIP LINE FROM BUS 63213 TO BUS 63212 CKT 1
TRIP LINE FROM BUS 63212 TO BUS 63211 CKT 1
TRIP LINE FROM BUS 63212 TO BUS 63210 CKT 1
TRIP LINE FROM BUS 63213 TO BUS 63113 CKT 1
END
COM '595  Defined as multi-terminal'
COM 'A 63215-63216  HIWY12 7-ORTONVL7 CKT 1   OPENS  B'
COM 'B 63214-63215  BIGSTON7-HIWY12 7 CKT 1   OPENS  A'
COM '-------------------------------------------------------'
CONTINGENCY '595'
TRIP LINE FROM BUS 63215 TO BUS 63216 CKT 1
TRIP LINE FROM BUS 63214 TO BUS 63215 CKT 1
END
COM '600  Defined as multi-terminal'
COM 'A 63249-63250   CRKSTON7-FERTILE7 CKT 1   OPENS  B C'
COM 'B 63250-63238   FERTILE7-WINGER 7 CKT 1   OPENS  A C'
COM 'C 63250-63150 FERTILE7-FERTILE9 CKT 1   OPENS  A B'
COM '-------------------------------------------------------'
CONTINGENCY '600'
TRIP LINE FROM BUS 63249 TO BUS 63250 CKT 1
TRIP LINE FROM BUS 63250 TO BUS 63238 CKT 1
TRIP LINE FROM BUS 63250 TO BUS 63150 CKT 1
END
COM '605  Defined as multi-terminal'
COM 'A 63223-63233   HOOT LK7-EDGETAP7 CKT 1   OPENS  B C D E F G H I'
COM 'B 63233-63234   EDGETAP7-PEL RPD7 CKT 1   OPENS  A C D E F G H I'
COM 'C 63233-63232   EDGETAP7-EDGETWN7 CKT 1   OPENS  A B D E F G H I'
COM 'D 63234-62528  PEL RPD7-TAMARAC7 CKT 1   OPENS  A B C E F G H I'
COM 'E 62528-62529  TAMARAC7-FRAZEE 7 CKT 1   OPENS  A B C D F G H I'
COM 'F 63236-62529  AUDUBON7-FRAZEE 7 CKT 1   OPENS  A B C D E G H I'
COM 'G 62528-62574 TAMARAC7-TAMARAC9 CKT 1   OPENS  A B C D E F H I'
COM 'H 62528-62574 TAMARAC7-TAMARAC9 CKT 2   OPENS  A B C D E F G I'
COM 'I 62529-62530  FRAZEET7-FRAZEE 7 CKT 1   OPENS  A B C D E f G H'
COM '-------------------------------------------------------'
CONTINGENCY '605'
TRIP LINE FROM BUS 63223 TO BUS 63233 CKT 1
TRIP LINE FROM BUS 63233 TO BUS 63234 CKT 1
TRIP LINE FROM BUS 63233 TO BUS 63232 CKT 1
TRIP LINE FROM BUS 63234 TO BUS 62528 CKT 1
TRIP LINE FROM BUS 62528 TO BUS 62533 CKT 1
TRIP LINE FROM BUS 62533 TO BUS 62529 CKT 1
TRIP LINE FROM BUS 63236 TO BUS 62529 CKT 1
TRIP LINE FROM BUS 62528 TO BUS 62574 CKT 1
TRIP LINE FROM BUS 62528 TO BUS 62574 CKT 2
TRIP LINE FROM BUS 62529 TO BUS 62530 CKT 1
END
COM 'CONTINGENCY 610 HAS NEW BREAKERS BEING ADDED AT WAHPETON'
COM '610  Defined as multi-terminal'
COM 'A 63331-63329 FERGSFL4-WAHPETN4 CKT 1   VLD SGL'
COM 'B 63327-63329 HANKSON4-WAHPETN4 CKT 1   VLD SGL'
COM 'C 66754-63329 MAPLE R4-WAHPETN4 CKT 1   VLD SGL'
COM 'D 63329-63191 WAHPETN4-WAHPET1Y CKT 1   OPENS  A B C E F G H I'
COM 'E 63191-63229 WAHPET1Y-WAHPETN7 CKT 1   OPENS  A B C D F G H I'
COM 'F 63191-63129 WAHPET1Y-WAHPETN9 CKT 1   OPENS  A B C D E G H I'
COM 'G 63329-63201 WAHPETN4-WHAPET2Y CKT 1   OPENS  A B C D E F H I'
COM 'H 63201-63229 WAHPET2Y-WAHPETN7 CKT 1   OPENS  A B C D E F G I'
COM 'I 63201-63129 WAHPET2Y-WAHPETN9 CKT 1   OPENS  A B C D E F G H'
COM '-------------------------------------------------------'
```

```
CONTINGENCY '610   1'
TRIP LINE FROM BUS 63331 TO BUS 63329 CKT 1
TRIP LINE FROM BUS 66754 TO BUS 63329 CKT 1
TRIP LINE FROM BUS 63329 TO BUS 63191 CKT 1
TRIP LINE FROM BUS 63191 TO BUS 63229 CKT 1
TRIP LINE FROM BUS 63191 TO BUS 63129 CKT 1
END
CONTINGENCY '610   2'
TRIP LINE FROM BUS 63327 TO BUS 63303 CKT 1
TRIP LINE FROM BUS 63327 TO BUS 63329 CKT 1
TRIP LINE FROM BUS 63329 TO BUS 63201 CKT 1
TRIP LINE FROM BUS 63201 TO BUS 63229 CKT 1
TRIP LINE FROM BUS 63201 TO BUS 63129 CKT 1
END
COM
COM '615  Defined as multi-terminal'
COM 'A 61610-63053  BADOURA4-HUBBARD4 CKT 1    OPENS  B C D E'
COM 'B 61610-61612  BADOURA4-RIVERTN2 CKT 1    OPENS  A C D E'
COM 'C 61610-61794  BADOURA4-BADOUJCT CKT 1    OPENS  A B D E'
COM 'D 61794-61640  BADOUJCT-BADOURA7 CKT 1    OPENS  A B C E'
COM 'E 61794-61795  BADOUJCT-BADOUTRT CKT 1    OPENS  A B C D'
COM '-------------------------------------------------------'
CONTINGENCY '615'
TRIP LINE FROM BUS 61610 TO BUS 63053 CKT 1
TRIP LINE FROM BUS 61610 TO BUS 61612 CKT 1
TRIP LINE FROM BUS 61610 TO BUS 61794 CKT 1
TRIP LINE FROM BUS 61794 TO BUS 61640 CKT 1
TRIP LINE FROM BUS 61794 TO BUS 61795 CKT 1
END
COM 'From GRE, New 115 kV multi-terminal lines for 2000 summer'
COM ' 616 Defined as multi-terminal line'
COM 'A 61673-62447 ARROWHD7-BERGNTP7 CKT 1   OPENS OTHER SEGMENTS'
COM 'B 61720-62447 COTTNTP7-BERGNTP7 CKT 1   OPENS OTHER SEGMENTS'
COM 'C 62446-62447 BERGNLK7-BERGNTP7 CKT 1   OPENS OTHER SEGMENTS'
COM 'D 61720-62452 COTTNTP7-COTTON 7 CKT 1   OPENS OTHER SEGMENTS'
COM 'E 61720-61718 COTTNTP7-16L TAP7 CKT 1   OPENS OTHER SEGMENTS'
COM 'F 61718-61721 16L TAP7-ETCO   7 CKT 1   OPENS OTHER SEGMENTS'
COM 'G 61718-62454 16L TAP7-PEARY  7 CKT 1   OPENS OTHER SEGMENTS'
COM 'H 61708-62454 VIRGNIA7-PEARY  7 CKT 1   OPENS OTHER SEGMENTS'
COM '-------------------------------------------------------'
CONTINGENCY '616'
TRIP LINE FROM BUS 61673 TO BUS 62447 CKT 1
TRIP LINE FROM BUS 61720 TO BUS 62447 CKT 1
TRIP LINE FROM BUS 62446 TO BUS 62447 CKT 1
TRIP LINE FROM BUS 61720 TO BUS 62452 CKT 1
TRIP LINE FROM BUS 61720 TO BUS 61718 CKT 1
TRIP LINE FROM BUS 61718 TO BUS 61721 CKT 1
TRIP LINE FROM BUS 61718 TO BUS 62454 CKT 1
TRIP LINE FROM BUS 61708 TO BUS 62454 CKT 1
END
COM 'From GRE, New 115 kV multi-terminal lines for 2000 summer'
COM ' 617  Defined as multi-terminal'
COM 'A 61642-62895  VERNDLE7-THMSTWN7   OPENS  B C D'
COM 'B 62895-61646  THMSTWN7-DOGLKTP7   OPENS  A C D'
COM 'C 61644-61646  DOGLAKE7-DOGLKTP7   OPENS  A B D'
COM 'D 61645-61646  BAXTER 7-DOGLKTP7   OPENS  A B C'
COM '-------------------------------------------------------'
CONTINGENCY '617'
TRIP LINE FROM BUS 61642 TO BUS 62896 CKT 1
TRIP LINE FROM BUS 62896 TO BUS 61639 CKT 1
TRIP LINE FROM BUS 61639 TO BUS 62895 CKT 1
TRIP LINE FROM BUS 62895 TO BUS 61646 CKT 1
TRIP LINE FROM BUS 61644 TO BUS 61646 CKT 1
TRIP LINE FROM BUS 61645 TO BUS 61646 CKT 1
END
COM ' 620 Defined as a multi-terminal'
COM 'A 61615-61614  ARROWHD4-98LTAP 4  CKT 1   OPENS B C D E F'
COM 'B 61625-61614  BLCKBRY4-98LTAP 4  CKT 1   OPENS A C D E F'
COM 'C 61616-61614  HILLTOP4-98LTAP 4  CKT 1   OPENS A B D E F'
COM 'D 61616-61576  HILLTOP4-HILLPJCT  CKT 1   OPENS A B C E F'
COM 'E 61576-61672  HILLPJCT-HILLTOP7  CKT 1   OPENS A B C D F'
```

```
COM 'F 61576-61577  HILLPJCT-HILLPTR9  CKT 1   OPENS A B C D E'
COM '-------------------------------------------------------'
CONTINGENCY '620'
TRIP LINE FROM BUS 61615 TO BUS 61614 CKT 1
TRIP LINE FROM BUS 61625 TO BUS 61614 CKT 1
TRIP LINE FROM BUS 61616 TO BUS 61614 CKT 1
TRIP LINE FROM BUS 61616 TO BUS 61576 CKT 1
TRIP LINE FROM BUS 61576 TO BUS 61672 CKT 1
TRIP LINE FROM BUS 61576 TO BUS 61577 CKT 1
END
COM '625  Defined as multi-terminal'
COM 'A 61623-61624  MINNTAC4-FORBES 4  CKT 1   OPENS  B C D'
COM 'B 61623-61558  MINNTAC4-MINT1JCT  CKT 1   OPENS  A C D'
COM 'C 61558-61710  MINT1JCT-MINNTAC7  CKT 1   OPENS  A B D'
COM 'D 61558-61559  MINT1JCT-MINT1TR9  CKT 1   OPENS  A B C'
COM '-------------------------------------------------------'
CONTINGENCY '625'
TRIP LINE FROM BUS 61623 TO BUS 61624 CKT 1
TRIP LINE FROM BUS 61623 TO BUS 61558 CKT 1
TRIP LINE FROM BUS 61558 TO BUS 61710 CKT 1
TRIP LINE FROM BUS 61558 TO BUS 61559 CKT 1
END
COM '630 Defined as multi-terminal line, GRE'
COM 'A 61655-61656 CROMWLL7-MAHTOWA7 CKT 1   OPENS B C'
COM 'B 61656-61664 MAHTOWA7-WRENSHL7 CKT 1   OPENS A C'
COM 'C 61664-61665 WRENSHL7-THOMSON7 CKT 1   OPENS A B'
COM ' See multi-terminal 685 below'
COM '-------------------------------------------------------'
CONTINGENCY '630'
TRIP LINE FROM BUS 61655 TO BUS 61656 CKT 1
TRIP LINE FROM BUS 61656 TO BUS 61664 CKT 1
TRIP LINE FROM BUS 61664 TO BUS 61665 CKT 1
END
COM '635 GRE Defined as multi-terminal line'
COM 'A 61655-62636 CROMWLL7-MCGREGR7 CKT 1   OPENS B C D E'
COM 'B 62636-62637 MCGREGR7-KIMBRLY7 CKT 1   OPENS A C D E'
COM 'C 62637-62638 KIMBRLY7-AITKIN 7 CKT 1   OPENS A B D E'
COM 'D 61654-62638 AITKNMN7-AITKIN 7 CKT 1   OPENS A B C E'
COM 'E 61653-61654 RIVERTN7-AITKNMN7 CKT 1   OPENS A B C D'
COM '-------------------------------------------------------'
CONTINGENCY '635'
TRIP LINE FROM BUS 61655 TO BUS 62636 CKT 1
TRIP LINE FROM BUS 62636 TO BUS 62637 CKT 1
TRIP LINE FROM BUS 62637 TO BUS 62638 CKT 1
TRIP LINE FROM BUS 61654 TO BUS 62638 CKT 1
TRIP LINE FROM BUS 61653 TO BUS 61654 CKT 1
END
COM '640  Defined as multi-terminal line, GRE'
COM 'A 62425-60156 WILLMAR7-PYNSVIL7 CKT 1   OPENS B'
COM 'B 62425-62427 WILLMAR7-WILLMAR8 CKT 1   OPENS A'
COM 'C 62425-62005 WILLMAR7-KERKHOT7 CKT 1   see cont 690, mtl'
COM '-------------------------------------------------------'
CONTINGENCY 640'
COM 'Fault at Wilmarth, between Wilmarth'
COM 'and Paynesville 115 kV'
TRIP LINE FROM BUS 62425 TO BUS 62427 CKT 1
TRIP LINE FROM BUS 62425 TO BUS 62005 CKT 1
END
COM '650  GRE Defined as multi-terminal line'
COM 'A 62090-60205 PARKWD 7-CRKEDLK7 CKT 1   OPENS B'
COM 'B 62090-62132 PARKWD 7-PARKWD 8 CKT 1   OPENS A'
COM '-------------------------------------------------------'
CONTINGENCY '650'
TRIP LINE FROM BUS 62090 TO BUS 60205 CKT 1
TRIP LINE FROM BUS 62090 TO BUS 62132 CKT 1
END
COM '655  GRE Defined as multi-terminal line'
COM 'A 62924-60206 MEDINA 7-CROWRVR7 CKT 1   OPENS B'
COM 'B 62924-62951 MEDINA 7-MEDINA 8 CKT 1   OPENS A'
COM '-------------------------------------------------------'
CONTINGENCY '655'
```

```
TRIP LINE FROM BUS 62924 TO BUS 60206 CKT 1
TRIP LINE FROM BUS 62924 TO BUS 62951 CKT 1
END
COM '660  GRE Defined as multi-terminal line'
COM 'A 63043-63046 ELK RIV4-BUNKER 4 CKT 1   OPENS B'
COM 'B 63043-62134 ELK RIV4-ELKR14S8 CKT 1   OPENS A'
COM '-------------------------------------------------------'
CONTINGENCY '660'
TRIP LINE FROM BUS 63043 TO BUS 63046 CKT 1
TRIP LINE FROM BUS 63043 TO BUS 62134 CKT 2
END
COM '665  GRE Defined as multi-terminal line'
COM 'A 63043-60152 ELK RIV4-MNTCELO4 CKT 1   OPENS B'
COM 'B 63043-62134 ELK RIV4-ELKRI4S8 CKT 1   OPENS A'
COM '-------------------------------------------------------'
CONTINGENCY '665'
TRIP LINE FROM BUS 63043 TO BUS 60152 CKT 1
TRIP LINE FROM BUS 63043 TO BUS 62134 CKT 1
END
COM 'CONTINGENCY 670 GRE Defined as multi-circuit, tower'
COM 'REVIEWED BY XCEL ENERGY 7/2002'
COM 'A 60160-60202  SHERCO 3-COON CK3 CKT 1   OPENS B, C,     tower'
COM 'B 63031-60160  BUNKER 3-SHERCO 3 CKT 1   OPENS A, C mtl, tower'
COM 'C 63031-60202  BUNKER 3-COON CK3 CKT 1   OPENS A, B mtl, tower'
COM '**GRE Defined as multi-terminal'
COM 'A 60160-60202  SHERCO 3-COON CK3 CKT 1   OPENS D E F'
COM 'D 61487-60655  CNCMID2Y-CNCTER29 CKT 1   OPENS A E F'
COM 'E 61487-60203  CNCMID2Y-COON CK7 CKT 1   OPENS A D F'
COM 'F 61487-60202  CNCMID2Y-COON CK3 CKT 1   OPENS A D E'
COM '**GRE Defined as multi-terminal '
COM 'B 63031-60160  BUNKER 3-SHERCO 3 CKT 1   OPENS C G H I'
COM 'C 63031-60202  BUNKER 3-COON CK3 CKT 1   OPENS B G H I'
COM 'G 63046-63083  BUNKER 4-BUNKER Y CKT 1   OPENS B C H I'
COM 'H 63031-63083  BUNKER 3-BUNKER Y CKT 1   OPENS B C G I'
COM 'I 63083-63076  BUNKER Y-BUNKER T CKT 1   OPENS B C G H'
COM '-------------------------------------------------------'
CONTINGENCY '670 1'
COM 'Tower outage with resulting multi-terminal'
TRIP LINE FROM BUS 60160 TO BUS 60202 CKT 1
TRIP LINE FROM BUS 63031 TO BUS 60160 CKT 1
TRIP LINE FROM BUS 63031 TO BUS 60202 CKT 1
TRIP LINE FROM BUS 60202 TO BUS 61487 CKT 10
TRIP LINE FROM BUS 61487 TO BUS 60203 CKT 10
TRIP LINE FROM BUS 61487 TO BUS 60655 CKT 10
TRIP LINE FROM BUS 63046 TO BUS 63031 CKT 1
END
CONTINGENCY '670 2'
COM 'Valid multi-terminal only'
TRIP LINE FROM BUS 63031 TO BUS 60160 CKT 1
TRIP LINE FROM BUS 63031 TO BUS 60202 CKT 1
TRIP LINE FROM BUS 63046 TO BUS 63031 CKT 1
END
CONTINGENCY '670 3'
COM 'Valid multi-terminal only'
TRIP LINE FROM BUS 60160 TO BUS 60202 CKT 1
TRIP LINE FROM BUS 60202 TO BUS 61487 CKT 10
TRIP LINE FROM BUS 61487 TO BUS 60203 CKT 10
TRIP LINE FROM BUS 61487 TO BUS 60655 CKT 10
END
COM ' 675 Defined as multi-terminal'
COM 'A 63045-63087 BENTON 4-BENTON Y CKT 1   OPENS B C D E F G'
COM 'B 63045-63088 BENTON 4-BENTON2Y CKT 2   OPENS A C D E F G'
COM 'C 60142-60160 BENTON 3-SHERCO 3 CKT 1   OPENS A B D E F G'
COM 'D 60142-63087 BENTON 3-BENTON Y CKT 1   OPENS A B C E F G'
COM 'E 60142-63088 BENTON 3-BENTON2Y CKT 2   OPENS A B C D F G'
COM 'F 63087-63075 BENTON Y-BENTON T CKT 1   OPENS A B C D E G'
COM 'G 63088-63079 BENTON2Y-BENTON2T CKT 2   OPENS A B C D E F'
COM '-------------------------------------------------------'
CONTINGENCY '675'
TRIP LINE FROM BUS 63045 TO BUS 60142 CKT 2
TRIP LINE FROM BUS 63045 TO BUS 60142 CKT 1
```

```
TRIP LINE FROM BUS 60142 TO BUS 60160 CKT 1
END
COM '680  GRE Defined as multi-terminal line'
COM 'A 63045-60143 BENTON 4-BENTON 7 CKT 1   OPENS B'
COM 'B 63045-62297 BENTON 4-BENTON 8 CKT 1   OPENS A'
COM '-------------------------------------------------------'
CONTINGENCY '680'
TRIP LINE FROM BUS 63045 TO BUS 60143 CKT P5
TRIP LINE FROM BUS 63045 TO BUS 62297 CKT 1
END
COM '685  Defined as multi-terminal line, GRE'
COM 'A 61655-62470 CROMWLL7-CROMWLL8 CKT 1   OPENS B C'
COM 'B 61655-61656 CROMWLL7-MAHTOWA7 CKT 1   OPENS A C'
COM 'C 61655-62636 CROMWLL7-MCGREGR7 CKT 1   OPENS A B'
COM '-------------------------------------------------------'
CONTINGENCY '685'
COM 'Simulates a fault on the transformer'
TRIP LINE FROM BUS 61655 TO BUS 62470 CKT 1
TRIP LINE FROM BUS 61655 TO BUS 61656 CKT 1
TRIP LINE FROM BUS 61655 TO BUS 62636 CKT 1
END
COM '  690 Defined as multi-terminal, GRE'
COM 'A 62425-62005 WILLMAR7-KERKHOT7   OPENS B C D'
COM 'B 60357-62005 MAYNARD7-KERKHOT7   OPENS A C D'
COM 'C 62005-62006 KERKHOT7-KERKHO 7   OPENS A B D'
COM 'D 62006-62001 KERKHO 7-BENSON 7   OPENS A B C'
COM '-------------------------------------------------------'
CONTINGENCY '690'
TRIP LINE FROM BUS 62425 TO BUS 62005 CKT 1
TRIP LINE FROM BUS 60357 TO BUS 62005 CKT 1
TRIP LINE FROM BUS 62005 TO BUS 62006 CKT 1
TRIP LINE FROM BUS 62006 TO BUS 62001 CKT 1
END
COM ' 695 Defined as multi-terminal'
COM 'A 62925-62926 DICKNSN7-DCKSNSS7   OPENS B C'
COM 'B 62926-60155 DCKSNSS7-PULASKI7   OPENS A C'
COM 'C 60153-60155 MNTCELO7-PULASKI7   OPENS A B'
COM '-------------------------------------------------------'
CONTINGENCY '695      '
TRIP LINE FROM BUS 62925 TO BUS 62926 CKT 1
TRIP LINE FROM BUS 62926 TO BUS 60155 CKT 1
TRIP LINE FROM BUS 62927 TO BUS 60153 CKT 1
TRIP LINE FROM BUS 62927 TO BUS 60155 CKT 1
END
COM 'CONTINGENCY 700  Defined as multi-circuit'
COM 'REVIEWED BY XCEL ENERGY 7/2002'
COM 'A 60105-60192  PR ISLD3-BLUE LK3   OPENS  B  tower'
COM 'B 60192-60217  BLUE LK3-INVRHLS3   OPENS  A  tower MTL C D'
COM 'C 60217-60236  INVRHLS3-REDROCK3   MTL B D'
COM 'D 60217 60218  INVRHLS3-INVRHLS7   VLD SLG'
COM '-------------------------------------------------------'
CONTINGENCY '700 1'
TRIP LINE FROM BUS 60105 TO BUS 60192 CKT 1
TRIP LINE FROM BUS 60192 TO BUS 60217 CKT 1
TRIP LINE FROM BUS 60217 TO BUS 60236 CKT 1
TRIP LINE FROM BUS 60217 TO BUS 60218 CKT 9
END
CONTINGENCY '700 2'
COM ' Multi-terminal portion only'
TRIP LINE FROM BUS 60192 TO BUS 60217 CKT 1
TRIP LINE FROM BUS 60217 TO BUS 60236 CKT 1
TRIP LINE FROM BUS 60217 TO BUS 60218 CKT 9
END
COM '705  Defined as multi-circuit, tower, mtl'
COM 'A 60192-60233  BLUE LK3-PARKERS3   OPENS  B or C tower'
COM 'B 60192-60262  BLUE LK3-EDEN PR3   OPENS  A      tower MTL'
COM 'C 60233-60262  PARKERS3-EDEN PR3   OPENS  A      tower MTL'
COM '**    Defined as multi-terminal'
COM 'B 60192-60262  BLUE LK3-EDEN PR3   OPENS  B'
COM 'D 60262-60263  EDEN PR3-EDEN PR7   OPENS  B'
COM '**    Defined as multi-terminal'
```

```
COM 'C 60233-60262  PARKERS3-EDEN PR3   OPENS  E'
COM 'E 60262-60263  EDEN PR3-EDEN PR7   OPENS  C'
COM '-------------------------------------------------------'
CONTINGENCY '705 1'
COM 'Tower with resulting multi-terminal'
TRIP LINE FROM BUS 60192 TO BUS 60233 CKT 1
TRIP LINE FROM BUS 60192 TO BUS 60262 CKT 1
COM 'Also trips the following because of B'
TRIP LINE FROM BUS 60262 TO BUS 60263 CKT 10
END
CONTINGENCY '705 2'
COM 'Tower with resulting multi-terminal'
TRIP LINE FROM BUS 60192 TO BUS 60233 CKT 1
TRIP LINE FROM BUS 60233 TO BUS 60262 CKT 1
COM 'Also trips the following because of C'
TRIP LINE FROM BUS 60262 TO BUS 60263 CKT 9
END
CONTINGENCY '705 3'
COM 'Valid Multi-terminal only'
TRIP LINE FROM BUS 60192 TO BUS 60262 CKT 1
TRIP LINE FROM BUS 60262 TO BUS 60263 CKT 10
END
CONTINGENCY '705 4'
COM 'Valid Multi-terminal only'
TRIP LINE FROM BUS 60233 TO BUS 60262 CKT 1
TRIP LINE FROM BUS 60262 TO BUS 60263 CKT 9
END
COM '710 Defined as multi-terminal, tower'
COM ' Multi-terminal trips A and B'
COM 'A 62925-62667  DICKNSN7-ST BONI7   OPENS B C'
COM 'B 62667-60277  ST BONI7-WWACNIA7   OPENS A C'
COM 'D 62667-63016 ST BONI7-ST BONI   OPENS A B'
COM ' A and B multi-curcuit tower with portions of C'
COM 'C 62925-60206  DICKNSN7-CROWRVR7'
COM '-------------------------------------------------------'
COM 'mtl outage portion'
CONTINGENCY '710 1'
TRIP LINE FROM BUS 62925 TO BUS 62667 CKT 1
TRIP LINE FROM BUS 62667 TO BUS 60277 CKT 1
END
COM 'mtl, tower outage portion'
CONTINGENCY '710 2'
TRIP LINE FROM BUS 62925 TO BUS 60206 CKT 1
TRIP LINE FROM BUS 62925 TO BUS 62667 CKT 1
TRIP LINE FROM BUS 62667 TO BUS 60277 CKT 1
END
COM 'CONTINGENCY 715'
COM 'Reviewed by Xcel Energy 7/2002'
COM '715 NSP Defined as multi-circuit, RW, tower'
COM 'A 60200-62666  BLK DOG7-GLNDALE7          OPENS  DorE RW MTL'
COM 'B 62666-60243  GLNDALE7-SCOTTAP7          OPENS  EorForG RW MTL'
COM 'C 60243-60244  SCOTTAP7-SCOTTCO7          OPENS  G RW MTL'
COM 'D 60190-60242  BLK DOG7-SAVAGE 7          OPENS  A RW MTL'
COM 'E 60242-62669  SAVAGE 7-EAGLECRK          OPENS  AorB RW MTL'
COM 'F 62669-60189  EAGLECRK-SHAKOPE7          OPENS  B RW MTL'
COM 'G 60189-60244  SHAKOPE7-SCOTTCO7          OPENS  BorC RW MTL'
COM '**    Defined as multi-terminal'
COM 'A 60200-62666  BLK DOG7-GLNDALE7          OPENS  H'
COM 'H 62666-62672  GLNDALE7-GLENDALE69 CKT 2   OPENS  A'
COM 'B 62666-60243  GLNDALE7-SCOTTAP7          OPENS  I C J K L'
COM 'I 62666-62672  GLNDALE7-GLENDALE69 CKT 1   OPENS  B C J K L'
COM 'C 60243-60244  SCOTTAP7-SCOTTCO7          OPENS  B I J K L'
COM 'J 60243-60194  SCOTTAP7-CARVRCO7          OPENS  B I C K L'
COM 'K  60194-60931  CARVRCO7-CARVRCO8               VLD SLG'
COM 'D 60190-60242  BLK DOG7-SAVAGE 7           VLD SLG'
COM 'E 60242-62669  SAVAGE 7-EAGLECRK          OPENS  F G'
COM 'F 62669-60189  EAGLECRK-SHAKOPE7         OPENS  E G'
COM 'G 60189-60244  SHAKOPE7-SCOTTCO7          OPENS  E F'
COM 'L 60194-60277  CARVRCO7- WWACNIA7'
COM '-------------------------------------------------------'
CONTINGENCY '715 1'
```

```
COM 'RW A&D with associated MTLs'
TRIP LINE FROM BUS 60200 TO BUS 62666 CKT 1
TRIP LINE FROM BUS 60190 TO BUS 60242 CKT 1
TRIP LINE FROM BUS 62666 TO BUS 62672 CKT 2
END
CONTINGENCY '715 2'
COM 'RW B&E with associated MTLs'
TRIP LINE FROM BUS 62666 TO BUS 60243 CKT 1
TRIP LINE FROM BUS 60242 TO BUS 62669 CKT 1
TRIP LINE FROM BUS 62666 TO BUS 62672 CKT 1
TRIP LINE FROM BUS 60243 TO BUS 60244 CKT 1
TRIP LINE FROM BUS 60243 TO BUS 60194 CKT 1
TRIP LINE FROM BUS 60194 TO BUS 60931 CKT 1
TRIP LINE FROM BUS 62669 TO BUS 60189 CKT 1
TRIP LINE FROM BUS 60189 TO BUS 60244 CKT 1
TRIP LINE FROM BUS 60194 TO BUS 60277 CKT 1
END
CONTINGENCY '715 3'
COM 'MTL with A'
TRIP LINE FROM BUS 60200 TO BUS 62666 CKT 1
TRIP LINE FROM BUS 62666 TO BUS 62672 CKT 2
END
CONTINGENCY '715 4'
COM 'MTL with B'
TRIP LINE FROM BUS 62666 TO BUS 60243 CKT 1
TRIP LINE FROM BUS 62666 TO BUS 62672 CKT 1
TRIP LINE FROM BUS 60243 TO BUS 60244 CKT 1
TRIP LINE FROM BUS 60243 TO BUS 60194 CKT 1
TRIP LINE FROM BUS 60194 TO BUS 60931 CKT 1
TRIP LINE FROM BUS 60194 TO BUS 60277 CKT 1
END
CONTINGENCY '715 5'
COM 'MTL A with D'
TRIP LINE FROM BUS 60200 TO BUS 62666 CKT 1
TRIP LINE FROM BUS 60242 TO BUS 62669 CKT 1
TRIP LINE FROM BUS 62669 TO BUS 60189 CKT 1
TRIP LINE FROM BUS 60189 TO BUS 60244 CKT 1
TRIP LINE FROM BUS 62666 TO BUS 62672 CKT 1
END
CONTINGENCY '715 5'
COM 'MTL with E'
TRIP LINE FROM BUS 60242 TO BUS 62669 CKT 1
TRIP LINE FROM BUS 62669 TO BUS 60189 CKT 1
TRIP LINE FROM BUS 60189 TO BUS 60244 CKT 1
END
COM 'CONTINGENCY 720'
COM 'REVIEWED BY XCEL ENERGY 7/2002'
COM '720  Defined as multi-circuit, tower'
COM 'A 60211-60234  GLESNLK7-PARKERS7  1   OPENS  B  tower'
COM 'B 60211-60234  GLENSLK7-PARKERS7  2   OPENS  A  tower'
COM '-------------------------------------------------------'
CONTINGENCY '720 1'
TRIP LINE FROM BUS 60211 TO BUS 60234 CKT 1
TRIP LINE FROM BUS 60211 TO BUS 60234 CKT 2
END
COM '725 GRE Defined as multi-terminal line'
COM 'A 63040-63048 BLAINE 4-RUSH CY4 CKT 1   OPENS B C'
COM 'B 63040-62293 BLAINE 4-BLAINE 8 CKT 1   OPENS A C'
COM 'C 63040-63046 BLAINE 4-BUNKER 4 CKT 1   OPEND A B'
COM '-------------------------------------------------------'
CONTINGENCY '725'
TRIP LINE FROM BUS 63040 TO BUS 63057 CKT 1
TRIP LINE FROM BUS 63057 TO BUS 63048 CKT 1
TRIP LINE FROM BUS 63048 TO BUS 62293 CKT 1
TRIP LINE FROM BUS 63040 TO BUS 63046 CKT 1
END
COM 'CONTINGENCY 735  Defined as multi-circuit'
COM 'REVIEWED BY XCEL ENERGY 7/2002'
COM 'A 60297-60298  OSPREY 7-PARKFLS7     OPENS   B'
COM 'B 60298-69120  PARKFLS7-CRANDPC      OPENS   A'
COM '**   Defined as multi-terminal'
```

```
COM 'B 60298-69120  PARKFLS7-CRANDPC      OPENS   C D E'
COM 'C 69120-60340  CRANDPC -PHILIPS7     OPENS   B D E'
COM 'D 60340-69108  PHILIPS7-PHILDPC      OPENS   B C E'
COM 'E 69108-60301  PHILDPC -PRENTCE7     OPENS   B C D'
COM '-------------------------------------------------------'
CONTINGENCY '735 1'
TRIP LINE FROM BUS 60298 TO BUS 60297 CKT 1
TRIP LINE FROM BUS 60298 TO BUS 69120 CKT 1
TRIP LINE FROM BUS 69120 TO BUS 60340 CKT 1
TRIP LINE FROM BUS 60340 TO BUS 69108 CKT 1
TRIP LINE FROM BUS 69108 TO BUS 60301 CKT 1
END
CONTINGENCY '735 2'
TRIP LINE FROM BUS 60298 TO BUS 60297 CKT 1
TRIP LINE FROM BUS 60298 TO BUS 69120 CKT 1
TRIP LINE FROM BUS 69120 TO BUS 60340 CKT 1
TRIP LINE FROM BUS 60340 TO BUS 69108 CKT 1
TRIP LINE FROM BUS 69108 TO BUS 60301 CKT 1
END
COM 'CONTINGENCY 740  Defined as multi-circuit, tower'
COM 'REVIEWED BY XCEL ENERGY 7/2002'
COM 'A 60103-63071  CANNFLS5-SPRNGCK5   OPENS  B  tower MTL'
COM 'B 60106-63071  PR ISLD5-SPRNGCK5   OPENS  A  tower'MTL
COM '**    Defined as multi-terminal'
COM 'A 60103-63071  CANNFLS5-SPRNGCK5   OPENS  C D'
COM 'C 60103-60104  CANNFLS5-CANNFLS7   VLD SGL'
COM 'D 63071-62387 CKT 1  SPRNGCRK5-SPRNGCK8 #1  VLD SGL'
COM '** Defined as multi-terminal'
COM 'B 60106-63071  PR ISLD5-SPRNGCK5   OPENS E'
COM 'E 63071-62387 CKT 2 SPRNGCRK5-SPRNGCK8 #2  VLD SGL'
COM '-------------------------------------------------------'
CONTINGENCY '740 1'
TRIP LINE FROM BUS 60103 TO BUS 63071 CKT 1
TRIP LINE FROM BUS 60106 TO BUS 62224 CKT 1
TRIP LINE FROM BUS 62224 TO BUS 63071 CKT 1
COM 'Also trips the following because of A'
TRIP LINE FROM BUS 60103 TO BUS 60104 CKT 5
TRIP LINE FROM BUS 63071 TO BUS 62387 CKT 1
TRIP LINE FROM BUS 63071 TO BUS 62387 CKT 2
END
CONTINGENCY '740 2'
TRIP LINE FROM BUS 60103 TO BUS 63071 CKT 1
TRIP LINE FROM BUS 60103 TO BUS 60104 CKT 5
TRIP LINE FROM BUS 63071 TO BUS 62387 CKT 1
END
CONTINGENCY '740 3'
TRIP LINE FROM BUS 60106 TO BUS 62224 CKT 1
TRIP LINE FROM BUS 62224 TO BUS 63071 CKT 1
TRIP LINE FROM BUS 63071 TO BUS 62387 CKT 2
END
COM 'CONTINGENCY 745  Defined as multi-terminal'
COM 'REVIEWED BY XCEL ENERGY 7/2002'
COM 'A 60156-60162  PYNSVIL7-WAKEFLD7   OPENS  B C'
COM 'B 60162-62616  WAKEFLD7-BIGSWAN7      VLD SGL'
COM 'C 60162-60706  WAKEFLD7-WAKEFLD9   OPENS A B'
COM '-------------------------------------------------------'
CONTINGENCY '745'
TRIP LINE FROM BUS 60156 TO BUS 60162 CKT 1
TRIP LINE FROM BUS 60162 TO BUS 62615 CKT 1
TRIP LINE FROM BUS 62615 TO BUS 62616 CKT 1
TRIP LINE FROM BUS 60162 TO BUS 60706 CKT 2
END
COM 'CONTINGENCY 750  Defined as multi-terminal'
COM 'REVIEWED BY XCEL ENERGY 7/2002'
COM 'A 61647-62817 LONG PR7-LITTLE S7 CKT 1 OPEN B C'
COM 'B 62817-60144 LITTLE S7-DGLASCO7 CKT 1 OPENS A C'
COM 'C 60144-60749 DGLASCO7-DGLAS C8 CKT 1 VLD SGL'
COM '-------------------------------------------------------'
CONTINGENCY '750'
TRIP LINE FROM BUS 61647 TO BUS 62817 CKT 1
TRIP LINE FROM BUS 62817 TO BUS 60144 CKT 1
```

```
TRIP LINE FROM BUS 60144 TO BUS 60749 CKT 1
END
COM 'CONTINGENCY 755 Defined as multi-terminal'
COM 'REVIEWED BY XCEL ENERGY 7/2002'
COM 'A 60166-60158  SALIDA 7-STCLTP 7 CKT 1   OPENS A C'
COM 'B 60157-60158  STCLOUD7-STCLTP 7 CKT 1   OPENS A B'
COM 'C 62815-60158  I94PARK7-STCLTP 7 CKT 1   OPENS A B'
COM '-------------------------------------------------------'
CONTINGENCY '755'
TRIP LINE FROM BUS 60166 TO BUS 60601 CKT 1
TRIP LINE FROM BUS 60601 TO BUS 60158 CKT 1
TRIP LINE FROM BUS 60157 TO BUS 60158 CKT 1
TRIP LINE FROM BUS 62815 TO BUS 60158 CKT 1
END
COM 'CONTINGENCY 756 IS NOT APPLICABLE TO MODEL - FUTURE FACILITIES'
COM 'REVIEWED BY XCEL ENERGY 7/2002'
COM '756 Defined as multi-terminal'
COM 'A 62815-62816  I94PARK7-STAUGST7 CKT 1   OPENS B C D'
COM 'B 60162-60159  WAKEFLD7-STCLTPW7 CKT 1   OPENS A C D'
COM 'C 60157-60159  STCLOUD7-STCLTPW7 CKT 1   OPENS A B D'
COM 'D 62816-60159  STAUGST7-STCLTPW7 CKT 1   OPENS A B C'
COM '-------------------------------------------------------'
COM 'CONTINGENCY '756'
COM 'TRIP LINE FROM BUS 62815 TO BUS 62816 CKT 1'
COM 'TRIP LINE FROM BUS 60162 TO BUS 60159 CKT 1'
COM 'TRIP LINE FROM BUS 60157 TO BUS 60159 CKT 1'
COM 'TRIP LINE FROM BUS 62816 TO BUS 60159 CKT 1'
COM 'END'
COM 'CONTINGENCY 760  Defined as multi-circuit, tower'
COM 'REVIEWED BY XCEL ENERGY 7/2002'
COM 'A 60105-60236  PR ISLD3-REDROCK3  1   OPENS  B'
COM 'B 60105-60236  PR ISLD3-REDROCK3  2   OPENS  A'
COM '-------------------------------------------------------'
CONTINGENCY '760'
TRIP LINE FROM BUS 60105 TO BUS 60236 CKT 1
TRIP LINE FROM BUS 60105 TO BUS 60236 CKT 2
END
COM 'CONTINGENCY 765  Defined as multi-terminal'
COM 'REVIEWED BY XCEL ENERGY 7/2002'
COM 'A 63048-60237  RUSH CY4-REDROCK4   OPENS  B C'
COM 'B 60236-60237  REDROCK3-REDROCK4   OPENS  A C'
COM 'C 60361-63048  ROCKCR 4-RUSH CY4   OPENS  A B'
COM '-------------------------------------------------------'
CONTINGENCY '765'
TRIP LINE FROM BUS  63048 TO BUS  60237 CKT 1
TRIP LINE FROM BUS  60236 TO BUS  60237 CKT 5
TRIP LINE FROM BUS  60361 TO BUS  63048 CKT 1
END
COM 'CONTINGENCY 770  Defined as multi-terminal'
COM 'REVIEWED BY XCEL ENERGY 7/2002'
COM 'A 60109-60110  WILMART5-WILMART7   OPENS  B C'
COM 'B 60109-60120  WILMART5-BLUEART5   OPENS  A C'
COM 'C 60120-34009  BLUEETA5-WINBAGO5   OPENS  A B'
COM '-------------------------------------------------------'
CONTINGENCY '770'
TRIP LINE FROM BUS 60109 TO BUS 60110 CKT 5
TRIP LINE FROM BUS 60109 TO BUS 60120 CKT 1
TRIP LINE FROM BUS 60120 TO BUS 34009 CKT 1
END
COM 'CONTINGENCY 775  Defined as multi-terminal'
COM 'REVIEWED BY XCEL ENERGY 7/2002'
COM 'A 61650-60163 LITTLEF7-WST CLD7      VLD SGL'
COM 'B 60154-60163 SAUK RV7-WST CLD7      A C D '
COM 'C 60165-60164 MEI INT7-XRDS   7      A B D '
COM 'D 60165-60163 MEI INT7-WST CLD7      A B C '
COM '-------------------------------------------------------'
CONTINGENCY '775'
TRIP LINE FROM BUS 61650 TO BUS 62268 CKT 1
TRIP LINE FROM BUS 62268 TO BUS 62819 CKT 1
TRIP LINE FROM BUS 60163 TO BUS 62819 CKT 1
TRIP LINE FROM BUS 60154 TO BUS 60163 CKT 1
```

```
TRIP LINE FROM BUS 60165 TO BUS 60164 CKT 1
TRIP LINE FROM BUS 60165 TO BUS 62814 CKT 1
TRIP LINE FROM BUS 62814 TO BUS 60163 CKT 1
END
COM 'CONTINGENCY 780  Defined as multi-circuit, tower'
COM 'REVIEWED BY XCEL ENERGY 7/2002'
COM 'A 60143-60146  BENTON 7-GRANCTY7   OPENS  B       tower'
COM 'B 60143-60348  BENTON 7-BENCTP7   OPENS  A       tower, MTL'
COM '** Defined as multi-terminal'
COM 'B 60143-60348  BENTON 7-BENCTP7   C D '
COM 'C 60348-60146 BENCTP7-GRANCTY7    B D  '
COM 'D 60348-60157 BENCTP7-STCLOUD7    C D  '
COM '-------------------------------------------------------'
CONTINGENCY '780 1'
TRIP LINE FROM BUS 60143 TO BUS 60146 CKT 1
TRIP LINE FROM BUS 60143 TO BUS 60348 CKT 1
TRIP LINE FROM BUS 60348 TO BUS 60146 CKT 1
TRIP LINE FROM BUS 60348 TO BUS 60157 CKT 1
END
CONTINGENCY '780 2'
TRIP LINE FROM BUS 60143 TO BUS 60348 CKT 1
TRIP LINE FROM BUS 60348 TO BUS 60146 CKT 1
TRIP LINE FROM BUS 60348 TO BUS 60157 CKT 1
END
COM 'CONTINGENCY 785  Defined as multi-terminal'
COM 'REVIEWED BY XCEL ENERGY 7/2002'
COM 'A 60129-60128  SPLIT R7-SPLIT R5   OPENS  B C D E F'
COM 'B 60128-34003  SPLIT R5-MAGNLIA5   OPENS  A C D E F'
COM 'C 34003-34004  MAGNLIA5-ELK    5   OPENS  A B D E F'
COM 'D 34004-34005  ELK     -HRN LK 5   OPEND  A B C E F'
COM 'E 34005-34225  HRN LK 5-HERONLK8 CKT 1'
COM '-------------------------------------------------------'
CONTINGENCY '785'
TRIP LINE FROM BUS 60129 TO BUS 60128 CKT 6
TRIP LINE FROM BUS 60128 TO BUS 34904 CKT 1
TRIP LINE FROM BUS 34904 TO BUS 34003 CKT 1
TRIP LINE FROM BUS 34003 TO BUS 34004 CKT 1
TRIP LINE FROM BUS 34004 TO BUS 62709 CKT 1
TRIP LINE FROM BUS 62709 TO BUS 34005 CKT 1
TRIP LINE FROM BUS 34005 TO BUS 34225 CKT 1
END
COM 'CONTINGENCY 790'
COM 'REVIEWED BY XCEL ENERGY 7/2002'
COM '790  Defined as multi-terminal'
COM 'A 66550-60147  GRANITF4-MINVALY4     OPENS  B'
COM 'B 60147-60148  MINVALY4-MINVALY7  1   OPENS  A'
COM '-------------------------------------------------------'
CONTINGENCY '790'
TRIP LINE FROM BUS 66550 TO BUS 60147 CKT 1
TRIP LINE FROM BUS 60147 TO BUS 60148 CKT 5
END
COM 'CONTINGENCY 795  Defined as multi-terminal'
COM 'REVIEWED BY XCEL ENERGY 7/2002'
COM 'A 66550-60150  GRANITF4-MNVLTAP4   OPENS  B C D E'
COM 'B 60148-60149  MINVALY7-MINVALT4   OPENS  A C D E'
COM 'C 60150-63054  MNVLTAP4-PANTHER4   OPENS  A B D E'
COM 'D 60149-60150  MINVALT4-MNVLTAP4   OPENS  A B C E'
COM 'E 63054-60742  PANTHER4-PANTHER8   OPENS  A B C D'
COM '-------------------------------------------------------'
CONTINGENCY '795'
TRIP LINE FROM BUS 66550 TO BUS 60150 CKT 1
TRIP LINE FROM BUS 60148 TO BUS 60149 CKT 6
TRIP LINE FROM BUS 60150 TO BUS 63054 CKT 1
TRIP LINE FROM BUS 60149 TO BUS 60150 CKT 1
TRIP LINE FROM BUS 63054 TO BUS 60742 CKT 1
END
COM '800  Defined as multi-terminal'
COM  Wilton 230/115 kV
COM 'A 63345-63186   WILTON 4-WILTON Y   OPENS B C D '
COM 'B 63186-63245   WILTON Y-WILTON 7   OPENS A C D'
COM 'C 63186-63343   WILTON Y-WILTON19   OPENS A B D
```

```
COM 'D 66758-63345   WINGER 4-WILTON 4   OPENS A B C
COM '-------------------------------------------------------'
CONTINGENCY '800 1'
TRIP LINE FROM BUS 63345 TO BUS 63186 CKT 1
TRIP LINE FROM BUS 63186 TO BUS 63245 CKT 1
TRIP LINE FROM BUS 63186 TO BUS 63343 CKT 1
TRIP LINE FROM BUS 66758 TO BUS 63345 CKT 1
END
COM 'CONTINGENCY 805  Defined as multi-terminal'
COM 'REVIEWED BY XCEL ENERGY 7/2002'
COM 'A 60187-60176  AS KING7-BAYTOWN7   OPENS  B C'
COM 'B 60224-60176  LONG LK7-BAYTOWN7   OPENS  A C'
COM 'C 60222-60224  KOLMNLK7-LONG LK7      VLD SGL'
COM '-------------------------------------------------------'
CONTINGENCY '805'
TRIP LINE FROM BUS 60187 TO BUS 60176 CKT 1
TRIP LINE FROM BUS 60222 TO BUS 60224 CKT 1
TRIP LINE FROM BUS 60224 TO BUS 60176 CKT 1
END
COM 'CONTINGENCY 810  Defined as multi-terminal'
COM 'REVIEWED BY XCEL ENERGY 7/2002'
COM 'A 60189-62980 BLK DOG4-MCLEOD 4   OPENS  B'
COM 'B 60189-60190 BLK DOG4-BLK DOG7   OPENS  A'
COM '-------------------------------------------------------'
COM CONTINGENCY '810'
COM TRIP LINE FROM BUS 60189 TO BUS 62980 CKT 1
COM TRIP LINE FROM BUS 60189 TO BUS 60190 CKT C1
COM END
COM 'CONTINGENCY 811  Defined as multi-terminal'
COM 'REVIEWED BY XCEL ENERGY 7/2002'
COM 'A 60107-62865 W FARIB7-AIRTECH7   OPENS  B C'
COM 'B 62865- 5998 AIRTECH7-RICEGEN7             '
COM 'A  5998-62234 RICEGEN7-W FARIB7   OPENS  B C'
COM 'C 60276-62234 AIRLAKE7-LKMARN 7   OPENS  A B'
COM '-------------------------------------------------------'
COM CONTINGENCY '811'
COM TRIP LINE FROM BUS 60107 TO BUS 62865 CKT 1
COM TRIP LINE FROM BUS 62865 TO BUS  5998 CKT 1
COM TRIP LINE FROM BUS  5998 TO BUS 62234 CKT 1
COM TRIP LINE FROM BUS 60276 TO BUS 62234 CKT 1
COM END
COM '815  Defined as multi-terminal'
COM 'A 62225-62226 BURNVIL7-FISCHER7   OPENS  B C D'
COM 'B 62226-60343 FISCHER7-WILLPIP7   OPENS  A C D'
COM 'C 60343-62228 WILLPIP7-APPVLTW7   OPENS  A B D'
COM 'D 62228-62227 APPVLTW7-JOHNCAK7   OPENS  A B C'
COM '-------------------------------------------------------'
CONTINGENCY '815'
TRIP LINE FROM BUS 62225 TO BUS 62226 CKT 1
TRIP LINE FROM BUS 62226 TO BUS 60343 CKT 1
TRIP LINE FROM BUS 60343 TO BUS 62228 CKT 1
TRIP LINE FROM BUS 62228 TO BUS 62227 CKT 1
END
COM 'CONTINGENCY 820  Defined as multi-terminal'
COM 'REVIEWED BY XCEL ENERGY 7/2002'
COM 'A 60218 TO  60271  INVRHLS7-RICHVLY7   OPENS  B C'
COM 'B 60271 TO  60247  RICHVLY7-LINDE  7   OPENS  A C'
COM 'C 60247 TO  60201  LINDE  7-CHEMOLT7   OPENS  A B'
COM '-------------------------------------------------------'
CONTINGENCY '820'
TRIP LINE FROM BUS 60218 TO BUS 60271 CKT 1
TRIP LINE FROM BUS 60271 TO BUS 60247 CKT 1
TRIP LINE FROM BUS 60247 TO BUS 60201 CKT 1
END
COM 'CONTINGENCY 825 DEFINED AS MULTI-TERMINAL'
COM 'SPLIT BUS SCENARIO AT THE ADAMS 345/161 SUBSTATION'
COM 'A 61950-63032  BYRON  3-PL VLLY3  OPENS B C D E
COM 'B 63032-60102  PL VLLY3-ADAMS  3  OPENS C D E
COM 'C 60102-34014  ADAMS  3-ADAMS  5  OPENS B D E
COM 'D 34014-34570  ADAMS  5-ADAMS N5  OPENS B C E
COM 'E 34014-34572  ADAMS  5-ADAMS S5  OPENS B C D
```

```
CONTINGENCY '825 1'
COM 'Trip PVS - BYRON THEN TRANSFER TRIP PVS - ADAMS AND SPLITS 161KV BUS'
TRIP LINE FROM BUS   61950 TO BUS 63032 CKT 1
TRIP LINE FROM BUS   63032 TO BUS 60102 CKT 1
TRIP LINE FROM BUS   60102 TO BUS 34014 CKT 1
END
COM
COM  SPLIT BUS SCENARIO AT THE ADAMS 345/161 SUBSTATION
CONTINGENCY '825 2'
COM 'Trip PVS - ADAMS THEN SPLIT 161KV BUS AND OPEN 345/161 TRANSFORMER'
TRIP LINE FROM BUS   63032 TO BUS 60102 CKT 1
TRIP LINE FROM BUS   60102 TO BUS 34014 CKT 1
END
COM 'CONTINGENCY 830  Defined as multi-terminal'
COM 'REVIEWED BY XCEL ENERGY 7/2002'
COM 'A 60238-68966 REDROCK7-GLENMONT CKT 1   OPENS  B C D'
COM 'B 60327-60330 T RIVFL7-CRYSTAL7 CKT 1   OPENS  A C D'
COM 'C 60327-60328 T RIVFL7-RIV FLS7 CKT 1   OPENS  A B D'
COM 'D 60327-68966 T RIVFL7-GLENMONT CKT 1   OPENS  A B C'
COM '-------------------------------------------------------'
CONTINGENCY '830'
TRIP LINE FROM BUS 60238 TO BUS 68966 CKT 1
TRIP LINE FROM BUS 60327 TO BUS 61244 CKT 1
TRIP LINE FROM BUS 61244 TO BUS 60330 CKT 1
TRIP LINE FROM BUS 60327 TO BUS 60328 CKT 1
TRIP LINE FROM BUS 60327 TO BUS 68966 CKT 1
END
COM 'CONTINGENCY 835  Defined as multi-terminal'
COM 'REVIEWED BY XCEL ENERGY 7/2002'
COM 'A 60282-60319 R CEDAR5-WHEATTP5 CKT 1   OPENS  B C D'
COM 'B 60319-60318 WHEATTP5-WHEATON5 CKT 1   OPENS  A C D'
COM 'C 60319-60320 WHEATTP5-HYDROLN5 CKT 1   OPENS  A B D'
COM 'D 60320-60321 HYDROLN5-HYDROLN7 CKT 1   OPENS  A B C'
COM '-------------------------------------------------------'
CONTINGENCY '835'
COM 'Fault between Wheaton Tap and Red Cedar/Hydro Lane'
TRIP LINE FROM BUS 60282 TO BUS 60319 CKT 1
TRIP LINE FROM BUS 60319 TO BUS 60318 CKT 1
TRIP LINE FROM BUS 60319 TO BUS 60320 CKT 1
TRIP LINE FROM BUS 60320 TO BUS 60321 CKT 1
END
COM 'CONTINGENCY 845  Defined as multi-terminal'
COM 'REVIEWED BY XCEL ENERGY 7/2002'
COM 'A 60306-60322  HOLCOMB7-CORNELL7   OPENS  B C'
COM 'B 69157-60322  ANDERSN7-CORNELL7   OPENS  A C'
COM 'C 60326-69157  JIMFLS 7-ANDERSN7   OPENS  A B'
COM '-------------------------------------------------------'
CONTINGENCY '845'
TRIP LINE FROM BUS 60306 TO BUS 60322 CKT 1
TRIP LINE FROM BUS 69157 TO BUS 60322 CKT 1
TRIP LINE FROM BUS 60326 TO BUS 69157 CKT 1
END
COM '850 Defined as multi-terminal'
COM 'A 60313-60312  PINE LK7-PINE LK5      OPENS B C D E'
COM 'B 60329-60314  CRYSTAL5-PINELKT5      OPENS A C D E'
COM 'C 69565-60314  APL RVR5-PINELKT5      OPENS A B D E'
COM 'D 60312-60314  PINE LK5-PINELKT5      OPENS A B C E'
COM 'E 69565-69007  APL RVR5-APLRVR 8      OPENS A B C D
COM '-------------------------------------------------------'
CONTINGENCY '850'
TRIP LINE FROM BUS 60313 TO BUS 60312 CKT 3
TRIP LINE FROM BUS 60329 TO BUS 60314 CKT 1
TRIP LINE FROM BUS 69565 TO BUS 60314 CKT 1
TRIP LINE FROM BUS 60312 TO BUS 60314 CKT 1
TRIP LINE FROM BUS 69565 TO BUS 69007 CKT 1
END
COM '855  Defined as multi-terminal'
COM 'A 63216-62003  ORTONVL7-GRACEVT7   OPENS  B C'
COM 'B 66555-62003  MORRIS 7-GRACEVT7   OPENS  A C'
COM 'C 62003-62004  GRACEVT7-GRACEV 7   OPENS  A B'
COM '-------------------------------------------------------'
```

```
COM CONTINGENCY '855'
COM 'Trip of A or B or C'
COM TRIP LINE FROM BUS 63216 TO BUS 62003 CKT 1
COM TRIP LINE FROM BUS 66555 TO BUS 62003 CKT 1
COM TRIP LINE FROM BUS 62003 TO BUS 62004 CKT 1
COM END                                                                << COMMENTED OUT
COM '860  Defined as multi-terminal'
COM 'A 66555-63218  MORRIS 7-MOROTP 7 CKT 1   OPENS B C D E'
COM 'B 63218-62002  MOROTP 7-WALDON 7 CKT 1   OPENS A C D E'
COM 'C 62002-62001  WALDON 7-BENSON 7 CKT 1   OPENS A B C D'
COM 'D 62001-62013  BENSON 7-BENSON 9 CKT 1   OPENS A B C E'
com 'E 62001-62006  BENSON 7-KERKHO 7 CKT 1   OPENS A B C D'
COM '-------------------------------------------------------'
CONTINGENCY '860'
TRIP LINE FROM BUS 66555 TO BUS 63218 CKT 1
TRIP LINE FROM BUS 63218 TO BUS 62002 CKT 1
TRIP LINE FROM BUS 62002 TO BUS 62027 CKT 1
TRIP LINE FROM BUS 62027 TO BUS 62001 CKT 1
TRIP LINE FROM BUS 62001 TO BUS 62013 CKT 1
TRIP LINE FROM BUS 62001 TO BUS 62006 CKT 1
END
COM '865   Defined as multi-terminal, otp'
COM 'A 63331-63051  FERGSFL4-HENNING4 CKT 1   OPENS  B C'
COM 'B 63051-63052  HENNING4-INMAN  4 CKT 1   OPENS  A C'
COM 'C 63051-62573  HENNING4-HENNING9 CKT 1   OPENS  A B'
COM '-------------------------------------------------------'
CONTINGENCY '865'
TRIP LINE FROM BUS 63331 TO BUS 63366 CKT 1
TRIP LINE FROM BUS 63366 TO BUS 63051 CKT 1
TRIP LINE FROM BUS 63051 TO BUS 63052 CKT 1
TRIP LINE FROM BUS 63051 TO BUS 62573 CKT 1
END
COM '866   Defined as multi-terminal, otp'
COM 'A 63052-61611  INMAN  4-WINGRIV4 CKT 1   OPENS  B'
COM 'B 63052-1956   INMAN  4-HENNING4 CKT 1   OPENS  A'
COM '-------------------------------------------------------'
COM CONTINGENCY '866'
COM TRIP LINE FROM BUS 63052 TO BUS 61611 CKT 1  'COMMENTED OUT AS  BUS 1956 NO LONGER EXIST'
COM TRIP LINE FROM BUS 63052 TO BUS 1956 CKT 1   'BOB ENDAHL 7-24-02'
COM END
COM ' '
COM ' '
COM ' '
COM ' '
COM '  END MINNESOTA AREA CONTINGENCIES'
COM ' '
COM ' '
COM ' '
COM '  START WISCONSIN AREA CONTINGENCIES'
COM ' '
COM ' '
COM 'CONTINGENCY 875  Defined as multi-circuit, RW'
COM 'REVIEWED BY XCEL ENERGY 7/2002'
COM 'A 60302-60308  COULEE 5-LACROSS5 CKT 1   OPENS  B       RW'
COM 'B 69523-69535  GENOA  5-LAC TAP5 CKT 1   OPENS  A       RW'
COM '**    Defined as multi-terminal'
COM 'C 60308-69535 LACROSS5-LAC TAP5 CKT 1   OPENS D E'
COM 'D 60309-69535 MRSHLND5-LAC TAP5 CKT 1   OPENS C E'
COM 'E 69523-69535 GENOA  5-LAC TAP5 CKT 1   OPENS C D'
COM '-------------------------------------------------------'
CONTINGENCY '875 1'
TRIP LINE FROM BUS 60302 TO BUS 60308 CKT 1
TRIP LINE FROM BUS 69523 TO BUS 69535 CKT 1
COM 'Also trips the following because of B'
TRIP LINE FROM BUS 60308 TO BUS 69535 CKT 1
TRIP LINE FROM BUS 60309 TO BUS 69535 CKT 1
END
CONTINGENCY '875 2'
COM 'Multi-terminal portion'
TRIP LINE FROM BUS 60308 TO BUS 69535 CKT 1
TRIP LINE FROM BUS 60309 TO BUS 69535 CKT 1
```

```
TRIP LINE FROM BUS 69523 TO BUS 69535 CKT 1
END
COM '880  Defined as  tower'
COM 'A 69523-69527 GENOA  5-HARMONY5 CKT 1   OPENS  B  tower'
COM 'B 69523-34021 GENOA  5-LANSING5 CKT 1   OPENS  A  tower'
COM '-------------------------------------------------------'
CONTINGENCY '880'
TRIP LINE FROM BUS 69523 TO BUS 69527 CKT 1
TRIP LINE FROM BUS 69523 TO BUS 34021 CKT 1
END
COM '885  Defined as multi-terminal'
COM 'A 69507-69511 SENECA 5-BELLCTR5 CKT 1   OPENS  B'
COM 'B 69507-69523 SENECA 5-GENOA  5 CKT 1   OPENS  A'
COM '-------------------------------------------------------'
CONTINGENCY '885'
TRIP LINE FROM BUS 69507 TO BUS 69511 CKT 1
TRIP LINE FROM BUS 69507 TO BUS 69523 CKT 1
END
COM 'CONTINGENCY 886  Defined as multi-terminal'
COM 'REVIEWED BY XCEL ENERGY 7/2002'
COM 'A 60316-60311  TREMVAL5-MAYFAIR5 CKT 1   OPENS  B'
COM 'B 60311-60308  MAYFAIR5-LACROSS5 CKT 1   OPENS  A'
COM '-------------------------------------------------------'
CONTINGENCY '886'
TRIP LINE FROM BUS 60316 TO BUS 60311 CKT 1
TRIP LINE FROM BUS 60311 TO BUS 60308 CKT 1
END
COM 'CONTINGENCY 887  Defined as multi-terminal'
COM 'REVIEWED BY XCEL ENERGY'
COM 'A 60305-60317  EAU CLR5-WHEATON5 CKT 1   OPENS  B C'
COM 'B 60317-69551  WHEATON5-ELK MND5 CKT 1   OPENS  B C'
COM '-------------------------------------------------------'
CONTINGENCY '887'
TRIP LINE FROM BUS 60317 TO BUS 61200 CKT 1
TRIP LINE FROM BUS 60305 TO BUS 61200 CKT 1
TRIP LINE FROM BUS 60317 TO BUS 69551 CKT 1
END
COM 'CONTINGENCY 888  Defined as common tower'
COM 'REVIEWED BY XCEL ENERGY 7/2002'
COM 'A 60285-60321  EAGLEPT7-HYDROLN7 CKT 1   OPENS  B'
COM 'B 60321-60326  HYDROLN7-JIMFLS 7 CKT 1   OPENS  A'
COM '-------------------------------------------------------'
CONTINGENCY '888'
TRIP LINE FROM BUS 60285 TO BUS 60321 CKT 1
TRIP LINE FROM BUS 60321 TO BUS 60326 CKT 1
END
COM 'CONTINGENCY 889  Defined as common tower'
COM 'REVIEWED BY XCEL ENERGY 7/2002'
COM 'A 60295-60350  BAYFRNT7-GINGLES7 CKT 1   OPENS  B'
COM 'B 60294-60293  GINGLES5-FRMSINN5 CKT 1   OPENS  A'
COM '-------------------------------------------------------'
CONTINGENCY '889'
TRIP LINE FROM BUS 60295 TO BUS 60350 CKT 1
TRIP LINE FROM BUS 60294 TO BUS 60293 CKT 1
END
COM 'CONTINGENCY 890  Defined as common tower'
COM 'REVIEWED BY XCEL ENERGY 7/2002'
COM 'A 60187-60325  AS KING7-WILOWRV7 CKT 1   OPENS  B'
COM 'B 60325-60313  WILOWRV7-PINE LK7 CKT 1   OPENS  A'
COM '-------------------------------------------------------'
CONTINGENCY '890'
TRIP LINE FROM BUS 60187 TO BUS 60325 CKT 1
TRIP LINE FROM BUS 60325 TO BUS 60313 CKT 1
END
COM 'CONTINGENCY 891  Defined as multi-terminal'
COM 'REVIEWED BY XCEL ENERGY 7/2002'
COM 'A 60321-60315  HYDROLN7-T-CRNRS7 CKT 1   OPENS  B'
COM 'B 60315-60666  T-CRNRS7-T CORNE8 CKT 1   OPENS  A'
COM '-------------------------------------------------------'
CONTINGENCY '891'
TRIP LINE FROM BUS 60321 TO BUS 60315 CKT 1
```

```
TRIP LINE FROM BUS 60315 TO BUS 60666 CKT 1
END
COM 'CONTINGENCY 892 Defined as multi-terminal'
COM 'REVIEWED BY XCEL ENERGY 7/2002'
COM 'A 60325-60313   WILOWRV7-PINE LK7 OPENS B'
COM 'B 60325-61023 2 PINE LK7-PINE LK8  VLD SGL'
CONTINGENCY '892'
TRIP LINE FROM BUS 60325 TO BUS 60313 CKT 1
TRIP LINE FROM BUS 60313 TO BUS 61023 CKT 1
END
COM ' '
COM '  END WISCONSIN AREA CONTINGENCIES'
COM
COM  ***************** Begin Minnesota Power *****************
 CONTINGENCY '11L'
    OPEN BRANCH FROM BUS 61740 TO BUS 62448 CKT 1  /  61740 GR RPDS7 115 62448 HILLCTY7 115 1
    OPEN BRANCH FROM BUS 61653 TO BUS 62448 CKT 1  /  61653 RIVERTN7 115 62448 HILLCTY7 115 1
 END
 CONTINGENCY '128L'
    OPEN BRANCH FROM BUS 61694 TO BUS 62171 CKT 1  /  61694 FINLAND7 115 62171 FINLAND7 115 1
    OPEN BRANCH FROM BUS 61692 TO BUS 61694 CKT 1  /  61692 SLVRBAY7 115 61694 FINLAND7 115 1
    OPEN BRANCH FROM BUS 61694 TO BUS 61697 CKT 1  /  61694 FINLAND7 115 61697 TAC HBR7 115 1
 END
 CONTINGENCY '132L'
    OPEN BRANCH FROM BUS 61678 TO BUS 61679 CKT 1  /  61678 NEMADJI7 115 61679 GARY   7 115 1
    OPEN BRANCH FROM BUS 61678 TO BUS 61683 CKT 1  /  61678 NEMADJI7 115 61683 STIN-MN7 115 1
 END
 CONTINGENCY '13L'
    OPEN BRANCH FROM BUS 61654 TO BUS 62638 CKT 1  /  61654 AITKNMN7 115 62638 AITKIN 7 115 1
    OPEN BRANCH FROM BUS 61653 TO BUS 61654 CKT 1  /  61653 RIVERTN7 115 61654 AITKNMN7 115 1
    OPEN BRANCH FROM BUS 61673 TO BUS 62445 CKT 1  /  61673 ARROWHD7 115 62445 4CORNRS7 115 1
    OPEN BRANCH FROM BUS 61655 TO BUS 62636 CKT 1  /  61655 CROMWLL7 115 62636 MCGREGR7 115 1
    OPEN BRANCH FROM BUS 62637 TO BUS 62638 CKT 1  /  62637 KIMBRLY7 115 62638 AITKIN 7 115 1
    OPEN BRANCH FROM BUS 62636 TO BUS 62637 CKT 1  /  62636 MCGREGR7 115 62637 KIMBRLY7 115 1
 END
 CONTINGENCY '14L'
    OPEN BRANCH FROM BUS 61724 TO BUS 61731 CKT 1  /  61724 HIBBING7 115 61731 14L TAP7 115 1
    OPEN BRANCH FROM BUS 61731 TO BUS 61733 CKT 1  /  61731 14L TAP7 115 61733 NATIONL7 115 1
    OPEN BRANCH FROM BUS 61731 TO BUS 61737 CKT 1  /  61731 14L TAP7 115 61737 NASHWAK7 115 1
 END
 CONTINGENCY '15L'
    OPEN BRANCH FROM BUS 61665 TO BUS 61666 CKT 1  /  61665 THOMSON7 115 61666 FONDULAC 115 1
    OPEN BRANCH FROM BUS 61666 TO BUS 61676 CKT 1  /  61666 FONDULAC 115 61676 HIBBARD7 115 1
 END
 CONTINGENCY '16L'
    OPEN BRANCH FROM BUS 61718 TO BUS 61720 CKT 1  /  61718 16L TAP7 115 61720 COTTNTP7 115 1
    OPEN BRANCH FROM BUS 61718 TO BUS 61721 CKT 1  /  61718 16L TAP7 115 61721 ETCO   7 115 1
    OPEN BRANCH FROM BUS 61718 TO BUS 62454 CKT 1  /  61718 16L TAP7 115 62454 PEARY  7 115 1
    OPEN BRANCH FROM BUS 61673 TO BUS 62447 CKT 1  /  61673 ARROWHD7 115 62447 BERGNTP7 115 1
    OPEN BRANCH FROM BUS 61720 TO BUS 62447 CKT 1  /  61720 COTTNTP7 115 62447 BERGNTP7 115 1
    OPEN BRANCH FROM BUS 61708 TO BUS 62454 CKT 1  /  61708 VIRGNIA7 115 62454 PEARY  7 115 1
    OPEN BRANCH FROM BUS 61720 TO BUS 62452 CKT 1  /  61720 COTTNTP7 115 62452 COTTON 7 115 1
 END
 CONTINGENCY '20L'
    OPEN BRANCH FROM BUS 61779 TO BUS 61781 CKT 1  /  61779 BLANDIN7 115 61781 20L TAP7 115 1
    OPEN BRANCH FROM BUS 61739 TO BUS 61781 CKT 1  /  61739 BLCKBRY7 115 61781 20L TAP7 115 1
    OPEN BRANCH FROM BUS 61740 TO BUS 61781 CKT 1  /  61740 GR RPDS7 115 61781 20L TAP7 115 1
 END
 CONTINGENCY '25L'
    OPEN BRANCH FROM BUS 61706 TO BUS 61724 CKT 1  /  61706 KEWTNTP7 115 61724 HIBBING7 115 1
    OPEN BRANCH FROM BUS 61706 TO BUS 61707 CKT 1  /  61706 KEWTNTP7 115 61707 MNTACT27 115 1
    OPEN BRANCH FROM BUS 61707 TO BUS 61708 CKT 1  /  61707 MNTACT27 115 61708 VIRGNIA7 115 1
 END
 CONTINGENCY '26L'
    OPEN BRANCH FROM BUS 61655 TO BUS 61656 CKT 1  /  61655 CROMWLL7 115 61656 MAHTOWA7 115 1
    OPEN BRANCH FROM BUS 61664 TO BUS 61665 CKT 1  /  61664 WRENSHL7 115 61665 THOMSON7 115 1
    OPEN BRANCH FROM BUS 61656 TO BUS 61664 CKT 1  /  61656 MAHTOWA7 115 61664 WRENSHL7 115 1
 END
 CONTINGENCY '27L'
    OPEN BRANCH FROM BUS 61778 TO BUS 61779 CKT 1  /  61778 BLNDTAP7 115 61779 BLANDIN7 115 1
    OPEN BRANCH FROM BUS 61748 TO BUS 61778 CKT 1  /  61748 BOSWELL7 115 61778 BLNDTAP7 115 1
```

```
END
CONTINGENCY '28L'
   OPEN BRANCH FROM BUS 61782 TO BUS 61790 CKT 1  /  61782 28L TAP7 115 61790 COHSSTTP 115 1
   OPEN BRANCH FROM BUS 61737 TO BUS 61782 CKT 1  /  61737 NASHWAK7 115 61782 28L TAP7 115 1
   OPEN BRANCH FROM BUS 61748 TO BUS 61782 CKT 1  /  61748 BOSWELL7 115 61782 28L TAP7 115 1
   OPEN BRANCH FROM BUS 61790 TO BUS 61791 CKT 1  /  61790 COHSSTTP 115 61791 LAKEHD 7 115 1
   OPEN BRANCH FROM BUS 61780 TO BUS 61791 CKT 1  /  61780 DEER RV7 115 61791 LAKEHD 7 115 1
END
CONTINGENCY '34L'
   DISCONNECT BUS 61704  / 34 L TAP7
END
CONTINGENCY '37L'
   OPEN BRANCH FROM BUS 61722 TO BUS 61734 CKT 1  /  61722 FORBES 7 115 61734 IRON TP7 115 1
   OPEN BRANCH FROM BUS 61734 TO BUS 62453 CKT 1  /  61734 IRON TP7 115 62453 IRON   7 115 1
   OPEN BRANCH FROM BUS 61734 TO BUS 61735 CKT 1  /  61734 IRON TP7 115 61735 TBIRD S7 115 1
   OPEN BRANCH FROM BUS 61708 TO BUS 61735 CKT 1  /  61708 VIRGNIA7 115 61735 TBIRD S7 115 1
END
CONTINGENCY '39L'
   OPEN BRANCH FROM BUS 61736 TO BUS 62451 CKT 1  /  61736 T-BIRD 7 115 62451 LAKELND7 115 1
   OPEN BRANCH FROM BUS 61702 TO BUS 62451 CKT 1  /  61702 LASKIN 7 115 62451 LAKELND7 115 1
   OPEN BRANCH FROM BUS 61708 TO BUS 61736 CKT 1  /  61708 VIRGNIA7 115 61736 T-BIRD 7 115 1
END
CONTINGENCY '42L'
   OPEN BRANCH FROM BUS 61688 TO BUS 61689 CKT 1  /  61688 COLBYVL7 115 61689 FRNCHRV7 115 1
   OPEN BRANCH FROM BUS 61689 TO BUS 62172 CKT 1
   OPEN BRANCH FROM BUS 62172 TO BUS 61690 CKT 1
   OPEN BRANCH FROM BUS 61691 TO BUS 61692 CKT 1  /  61691 SLVRBYH7 115 61692 SLVRBAY7 115 1
   OPEN BRANCH FROM BUS 61690 TO BUS 62170 CKT 1  /  61690 TWO HBR7 115 62170 WALDO  7 115 1
   OPEN BRANCH FROM BUS 61691 TO BUS 62170 CKT 1  /  61691 SLVRBYH7 115 62170 WALDO  7 115 1
END
CONTINGENCY '44L'
   OPEN BRANCH FROM BUS 61722 TO BUS 61725 CKT 1  /  61722 FORBES 7 115 61725 44L TAP7 115 1
   OPEN BRANCH FROM BUS 61724 TO BUS 61725 CKT 1  /  61724 HIBBING7 115 61725 44L TAP7 115 1
   OPEN BRANCH FROM BUS 61725 TO BUS 61728 CKT 1  /  61725 44L TAP7 115 61728 HIBBTAC7 115 1
END
CONTINGENCY '46L'
   OPEN BRANCH FROM BUS 61650 TO BUS 62175 CKT 1  /  61650 LITTLEF7 115 62175 DEWING 7 115 1
   OPEN BRANCH FROM BUS 61651 TO BUS 62175 CKT 1  /  61651 MUDLAKE7 115 62175 DEWING 7 115 1
END
CONTINGENCY '48L'
   OPEN BRANCH FROM BUS 61640 TO BUS 62410 CKT 1  /  61640 BADOURA7 115 62410 PALMRLK7 115 1
   OPEN BRANCH FROM BUS 61641 TO BUS 62410 CKT 1  /  61641 HUBBARD7 115 62410 PALMRLK7 115 1
END
CONTINGENCY '51L'
   OPEN BRANCH FROM BUS 61648 TO BUS 62176 CKT 1  /  61648 PEQUOT 7 115 62176 MERRFLD7 115 1
   OPEN BRANCH FROM BUS 61653 TO BUS 62176 CKT 1  /  61653 RIVERTN7 115 62176 MERRFLD7 115 1
END
CONTINGENCY '71L'
   OPEN BRANCH FROM BUS 61673 TO BUS 61687 CKT 1  /  61673 ARROWHD7 115 61687 MIDWAY 7 115 1
   OPEN BRANCH FROM BUS 61686 TO BUS 61687 CKT 1  /  61686 15TH AV7 115 61687 MIDWAY 7 115 1
END
CONTINGENCY '726L'
   OPEN BRANCH FROM BUS 61784 TO BUS 82365 CKT 1  /  61784 INTPHAS7 118 82365 FT FRANC 118 1
   OPEN BRANCH FROM BUS 61752 TO BUS 61784 CKT 1  /  61752 I.FALLS7 118 61784 INTPHAS7 118 1
END
CONTINGENCY '761L'
   OPEN BRANCH FROM BUS 60292 TO BUS 61632 CKT 1  /  60292 IRONRIV7 115 61632 DAHLBRG7 115 1
   OPEN BRANCH FROM BUS 61632 TO BUS 61684 CKT 1  /  61632 DAHLBRG7 115 61684 STIN-WI7 115 1
END
CONTINGENCY '762L'
   OPEN BRANCH FROM BUS 60290 TO BUS 61631 CKT 1  /  60290 ST LAKE5 161 61631 MINONG 5 161 1
   OPEN BRANCH FROM BUS 61630 TO BUS 61631 CKT 1  /  61630 STINSON5 161 61631 MINONG 5 161 1
END
CONTINGENCY '78L'
   OPEN BRANCH FROM BUS 61722 TO BUS 61730 CKT 1  /  61722 FORBES 7 115 61730 78L TAP7 115 1
   OPEN BRANCH FROM BUS 61728 TO BUS 61730 CKT 1  /  61728 HIBBTAC7 115 61730 78L TAP7 115 1
   OPEN BRANCH FROM BUS 61730 TO BUS 61733 CKT 1  /  61730 78L TAP7 115 61733 NATIONL7 115 1
END
CONTINGENCY '8L'
   OPEN BRANCH FROM BUS 61803 TO BUS 62404 CKT 1  /  61803 THOM46 946.0 62404 FOND DU946.0 1
   OPEN BRANCH FROM BUS 61665 TO BUS 61803 CKT 1  /  61665 THOMSON7 115 61803 THOM46 946.0 1
```

```
END
CONTINGENCY '91L-99L-64L'
   OPEN BRANCH FROM BUS 61610 TO BUS 61794 CKT 1  /  61610 BADOURA4 230 61794 BADOUJCT 115 1
   OPEN BRANCH FROM BUS 61610 TO BUS 63053 CKT 1  /  61610 BADOURA4 230 63053 HUBBARD4 230 1
   OPEN BRANCH FROM BUS 61610 TO BUS 61612 CKT 1  /  61610 BADOURA4 230 61612 RIVERTN4 230 1
END
CONTINGENCY '97L'
   OPEN BRANCH FROM BUS 61611 TO BUS 61798 CKT 1  /  61611 WINGRIV4 230 61798 WINGRJCT 115 1
   OPEN BRANCH FROM BUS 61613 TO BUS 61798 CKT 1  /  61613 WINGRIV7 115 61798 WINGRJCT 115 1
   OPEN BRANCH FROM BUS 61798 TO BUS 61799 CKT 1  /  61798 WINGRJCT 115 61799 WINGRTR913.8 1
   OPEN BRANCH FROM BUS 61611 TO BUS 61612 CKT 1  /  61611 WINGRIV4 230 61612 RIVERTN4 230 1
END
CONTINGENCY '98L'
   OPEN BRANCH FROM BUS 61614 TO BUS 61615 CKT 1  /  61614 98L TAP4 230 61615 ARROWHD4 230 1
   OPEN BRANCH FROM BUS 61614 TO BUS 61625 CKT 1  /  61614 98L TAP4 230 61625 BLCKBRY4 230 1
   OPEN BRANCH FROM BUS 61614 TO BUS 61616 CKT 1  /  61614 98L TAP4 230 61616 HILLTOP4 230 1
END
CONTINGENCY '9L'
   OPEN BRANCH FROM BUS 61670 TO BUS 61671 CKT 1  /  61670 MDWLNDS7 115 61671 BURNETT7 115 1
   OPEN BRANCH FROM BUS 61668 TO BUS 61671 CKT 1  /  61668 CLOQUET7 115 61671 BURNETT7 115 1
   OPEN BRANCH FROM BUS 61663 TO BUS 61739 CKT 1  /  61663 FLDWDTP7 115 61739 BLCKBRY7 115 1
   OPEN BRANCH FROM BUS 61663 TO BUS 61669 CKT 1  /  61663 FLDWDTP7 115 61669 FLDWOOD7 115 1
   OPEN BRANCH FROM BUS 61663 TO BUS 61670 CKT 1  /  61663 FLDWDTP7 115 61670 MDWLNDS7 115 1
END
CONTINGENCY 'ARROWHD 6T'
   OPEN BRANCH FROM BUS 61554 TO BUS 61615 CKT 1  /  61554 AWHD1JCT 115 61615 ARROWHD4 230 1
   OPEN BRANCH FROM BUS 61554 TO BUS 61673 CKT 1  /  61554 AWHD1JCT 115 61673 ARROWHD7 115 1
   OPEN BRANCH FROM BUS 61554 TO BUS 61555 CKT 1  /  61554 AWHD1JCT 115 61555 AWHD1TR913.8 1
END
CONTINGENCY 'ARROWHD 7T'
   OPEN BRANCH FROM BUS 61556 TO BUS 61615 CKT 2  /  61556 AWHD2JCT 115 61615 ARROWHD4 230 2
   OPEN BRANCH FROM BUS 61556 TO BUS 61673 CKT 2  /  61556 AWHD2JCT 115 61673 ARROWHD7 115 2
   OPEN BRANCH FROM BUS 61556 TO BUS 61557 CKT 2  /  61556 AWHD2JCT 115 61557 AWHD2TR913.8 2
END
CONTINGENCY 'BADOURA 1T'
   OPEN BRANCH FROM BUS 61610 TO BUS 61794 CKT 1  /  61610 BADOURA4 230 61794 BADOUJCT 115 1
   OPEN BRANCH FROM BUS 61610 TO BUS 63053 CKT 1  /  61610 BADOURA4 230 63053 HUBBARD4 230 1
   OPEN BRANCH FROM BUS 61610 TO BUS 61612 CKT 1  /  61610 BADOURA4 230 61612 RIVERTN4 230 1
END
CONTINGENCY 'BLAKBERY 1T'
   OPEN BRANCH FROM BUS 61566 TO BUS 61567 CKT 1  /  61566 BLBY1JCT 115 61567 BLBY1TR913.8 1
   OPEN BRANCH FROM BUS 61566 TO BUS 61625 CKT 1  /  61566 BLBY1JCT 115 61625 BLCKBRY4 230 1
   OPEN BRANCH FROM BUS 61566 TO BUS 61739 CKT 1  /  61566 BLBY1JCT 115 61739 BLCKBRY7 115 1
END
CONTINGENCY 'BLAKBERY 2T'
   OPEN BRANCH FROM BUS 61568 TO BUS 61569 CKT 2  /  61568 BLBY2JCT 115 61569 BLBY2TR913.8 2
   OPEN BRANCH FROM BUS 61568 TO BUS 61625 CKT 2  /  61568 BLBY2JCT 115 61625 BLCKBRY4 230 2
   OPEN BRANCH FROM BUS 61568 TO BUS 61739 CKT 2  /  61568 BLBY2JCT 115 61739 BLCKBRY7 115 2
END
CONTINGENCY 'FORBES 1T'
   OPEN BRANCH FROM BUS 61550 TO BUS 61551 CKT 1  /  61550 FORB1JCT 230 61551 FORB1TR934.5 1
   OPEN BRANCH FROM BUS 60101 TO BUS 61550 CKT 1  /  60101 FORBES 2 500 61550 FORB1JCT 230 1
   OPEN BRANCH FROM BUS 61550 TO BUS 61624 CKT 1  /  61550 FORB1JCT 230 61624 FORBES 4 230 1
END
CONTINGENCY 'FORBES 2T'
   OPEN BRANCH FROM BUS 61550 TO BUS 61551 CKT 1  /  61550 FORB1JCT 230 61551 FORB1TR934.5 1
   OPEN BRANCH FROM BUS 60101 TO BUS 61550 CKT 1  /  60101 FORBES 2 500 61550 FORB1JCT 230 1
   OPEN BRANCH FROM BUS 61550 TO BUS 61624 CKT 1  /  61550 FORB1JCT 230 61624 FORBES 4 230 1
   OPEN BRANCH FROM BUS 61564 TO BUS 61565 CKT 2  /  61564 FORB4JCT 115 61565 FORB4TR913.8 2
   OPEN BRANCH FROM BUS 61564 TO BUS 61624 CKT 2  /  61564 FORB4JCT 115 61624 FORBES 4 230 2
   OPEN BRANCH FROM BUS 61564 TO BUS 61722 CKT 2  /  61564 FORB4JCT 115 61722 FORBES 7 115 2
END
CONTINGENCY 'FORBES 3T'
   OPEN BRANCH FROM BUS 61552 TO BUS 61553 CKT 1  /  61552 FORB2JCT 230 61553 FORB2TR934.5 1
   OPEN BRANCH FROM BUS 60101 TO BUS 61552 CKT 1  /  60101 FORBES 2 500 61552 FORB2JCT 230 1
   OPEN BRANCH FROM BUS 61552 TO BUS 61624 CKT 1  /  61552 FORB2JCT 230 61624 FORBES 4 230 1
   OPEN BRANCH FROM BUS 61564 TO BUS 61565 CKT 2  /  61564 FORB4JCT 115 61565 FORB4TR913.8 2
   OPEN BRANCH FROM BUS 61564 TO BUS 61624 CKT 2  /  61564 FORB4JCT 115 61624 FORBES 4 230 2
   OPEN BRANCH FROM BUS 61564 TO BUS 61722 CKT 2  /  61564 FORB4JCT 115 61722 FORBES 7 115 2
END
CONTINGENCY 'FORBES 7T-8'
```

```
   OPEN BRANCH FROM BUS 61550 TO BUS 61551 CKT 1  /  61550 FORB1JCT 230 61551 FORB1TR934.5 1
   OPEN BRANCH FROM BUS 60101 TO BUS 61550 CKT 1  /  60101 FORBES 2 500 61550 FORB1JCT 230 1
   OPEN BRANCH FROM BUS 61550 TO BUS 61624 CKT 1  /  61550 FORB1JCT 230 61624 FORBES 4 230 1
   OPEN BRANCH FROM BUS 61552 TO BUS 61553 CKT 1  /  61552 FORB2JCT 230 61553 FORB2TR934.5 1
   OPEN BRANCH FROM BUS 60101 TO BUS 61552 CKT 1  /  60101 FORBES 2 500 61552 FORB2JCT 230 1
   OPEN BRANCH FROM BUS 61552 TO BUS 61624 CKT 1  /  61552 FORB2JCT 230 61624 FORBES 4 230 1
END
CONTINGENCY 'HILLTOP 1T'
   OPEN BRANCH FROM BUS 61614 TO BUS 61625 CKT 1  /  61614 98L TAP4 230 61625 BLCKBRY4 230 1
   OPEN BRANCH FROM BUS 61614 TO BUS 61616 CKT 1  /  61614 98L TAP4 230 61616 HILLTOP4 230 1
   OPEN BRANCH FROM BUS 61576 TO BUS 61616 CKT 1  /  61576 HILTPJCT 115 61616 HILLTOP4 230 1
   OPEN BRANCH FROM BUS 61576 TO BUS 61672 CKT 1  /  61576 HILTPJCT 115 61672 HILLTOP7 115 1
   OPEN BRANCH FROM BUS 61576 TO BUS 61577 CKT 1  /  61576 HILTPJCT 115 61577 HILTPTR913.8 1
END
CONTINGENCY 'LASKIN 1T'
   OPEN BRANCH FROM BUS 61574 TO BUS 61701 CKT 1  /  61574 LASKNJCT 115 61701 LASKIN 6 138 1
   OPEN BRANCH FROM BUS 61574 TO BUS 61702 CKT 1  /  61574 LASKNJCT 115 61702 LASKIN 7 115 1
   OPEN BRANCH FROM BUS 61574 TO BUS 61575 CKT 1  /  61574 LASKNJCT 115 61575 LASKNTR913.8 1
END
CONTINGENCY 'LIL FORK 1T'
   OPEN BRANCH FROM BUS 61751 TO BUS 66753 CKT 1  /  61751 LITLFRK7 118 66753 RUNNING4 230 1
   OPEN BRANCH FROM BUS 60167 TO BUS 66753 CKT 1  /  60167 RUNSWCP4 230 66753 RUNNING4 230 1
END
CONTINGENCY 'MINNTAC 1T'
   OPEN BRANCH FROM BUS 61623 TO BUS 61627 CKT 1  /  61623 MINNTAC4 230 61627 SHANNON4 230 1
   OPEN BRANCH FROM BUS 61558 TO BUS 61623 CKT 1  /  61558 MINT1JCT 115 61623 MINNTAC4 230 1
   OPEN BRANCH FROM BUS 61558 TO BUS 61710 CKT 1  /  61558 MINT1JCT 115 61710 MINNTAC7 115 1
   OPEN BRANCH FROM BUS 61558 TO BUS 61559 CKT 1  /  61558 MINT1JCT 115 61559 MINT1TR913.8 1
END
CONTINGENCY 'MINNTAC 2T'
   OPEN BRANCH FROM BUS 61623 TO BUS 61624 CKT 1  /  61623 MINNTAC4 230 61624 FORBES 4 230 1
   OPEN BRANCH FROM BUS 61560 TO BUS 61623 CKT 2  /  61560 MINT2JCT 115 61623 MINNTAC4 230 2
   OPEN BRANCH FROM BUS 61560 TO BUS 61710 CKT 2  /  61560 MINT2JCT 115 61710 MINNTAC7 115 2
   OPEN BRANCH FROM BUS 61560 TO BUS 61561 CKT 2  /  61560 MINT2JCT 115 61561 MINT2TR913.8 2
END
CONTINGENCY 'MUDLAKE 1T'
   OPEN BRANCH FROM BUS 61578 TO BUS 61617 CKT 1  /  61578 MUDLKJCT 115 61617 MUDLAKE4 230 1
   OPEN BRANCH FROM BUS 61578 TO BUS 61651 CKT 1  /  61578 MUDLKJCT 115 61651 MUDLAKE7 115 1
   OPEN BRANCH FROM BUS 61578 TO BUS 61579 CKT 1  /  61578 MUDLKJCT 115 61579 MUDLKTR913.8 1
END
CONTINGENCY 'RIVERTON 6T'
   OPEN BRANCH FROM BUS 61612 TO BUS 61796 CKT 1  /  61612 RIVERTN4 230 61796 RIVERJCT 115 1
   OPEN BRANCH FROM BUS 61653 TO BUS 61796 CKT 1  /  61653 RIVERTN7 115 61796 RIVERJCT 115 1
   OPEN BRANCH FROM BUS 61796 TO BUS 61797 CKT 1  /  61796 RIVERJCT 115 61797 RIVERTR913.8 1
END
CONTINGENCY 'SHANNON 2T'
   OPEN BRANCH FROM BUS 61750 TO BUS 61785 CKT 1  /  61750 SHAN2TR913.8 61785 SHAN2JCT 115 1
   OPEN BRANCH FROM BUS 61627 TO BUS 61785 CKT 1  /  61627 SHANNON4 230 61785 SHAN2JCT 115 1
   OPEN BRANCH FROM BUS 61749 TO BUS 61785 CKT 1  /  61749 SHANNON7 115 61785 SHAN2JCT 115 1
END
CONTINGENCY 'STINSON 1T'
   OPEN BRANCH FROM BUS 60290 TO BUS 61631 CKT 1  /  60290 ST LAKE5 161 61631 MINONG 5 161 1
   OPEN BRANCH FROM BUS 61630 TO BUS 61631 CKT 1  /  61630 STINSON5 161 61631 MINONG 5 161 1
END
CONTINGENCY 'TACHRBR 1T'
   OPEN BRANCH FROM BUS 61572 TO BUS 61696 CKT 1  /  61572 TACHBJCT 115 61696 TAC HBR6 138 1
   OPEN BRANCH FROM BUS 61572 TO BUS 61697 CKT 1  /  61572 TACHBJCT 115 61697 TAC HBR7 115 1
   OPEN BRANCH FROM BUS 61572 TO BUS 61573 CKT 1  /  61572 TACHBJCT 115 61573 TACHBTR913.8 1
END
CONTINGENCY 'WINGRVR 1T'
   OPEN BRANCH FROM BUS 61611 TO BUS 63052 CKT 1  /  61611 WINGRIV4 230 63052 INMAN  4 230 1
   OPEN BRANCH FROM BUS 61611 TO BUS 61612 CKT 1  /  61611 WINGRIV4 230 61612 RIVERTN4 230 1
   OPEN BRANCH FROM BUS 61611 TO BUS 61798 CKT 1  /  61611 WINGRIV4 230 61798 WINGRJCT 115 1
END

COM  **************** End Minnesota Power *****************

COM ******************************************************
COM ADDED THREE WINDING TRANSFORMERS IN WAPA (AREA 652), OTP (AREA 626)
COM GRE (AREA 618) - 12/17/2006 - ABB
CONTINGENCY 'CENTER 1T'
```

```
DISCONNECT BUS 66797
END
CONTINGENCY 'COYOTE 1T'
TRIP LINE FROM BUS 67316 TO BUS 67318 CKT 1
END
CONTINGENCY 'MAPLE RT'
DISCONNECT BUS 66783
END
CONTINGENCY 'MCHENRY T1'
DISCONNECT BUS 63082
END
CONTINGENCY 'RAMSEY T1'
DISCONNECT BUS 63084
END
CONTINGENCY 'WAHPETON T1'
DISCONNECT BUS 63191
END
CONTINGENCY 'WAHPETON T2'
DISCONNECT BUS 63201
END
CONTINGENCY 'AUDUBON T1'
DISCONNECT BUS 63202
END
CONTINGENCY 'WILTON T1'
DISCONNECT BUS 63145
END
CONTINGENCY 'BEMIDJIT'
DISCONNECT BUS 66789
END
CONTINGENCY 'KARLSTAT'
DISCONNECT BUS 66785
END
CONTINGENCY 'HENSEL2Y'
DISCONNECT BUS 63184
END
CONTINGENCY 'HENSEL Y'
DISCONNECT BUS 63192
END
CONTINGENCY 'BUFFALOY'
DISCONNECT BUS 63198
END
CONTINGENCY 'FORMAN Y'
DISCONNECT BUS 63193
END
CONTINGENCY 'LANGDONT'
DISCONNECT BUS 66784
END
CONTINGENCY 'JAMSTN1Y'
DISCONNECT BUS 63199
END
CONTINGENCY 'JAMSTN2Y'
DISCONNECT BUS 63200
END
CONTINGENCY 'RUGBY  Y'
DISCONNECT BUS 63185
END
CONTINGENCY 'WILTON Y'
DISCONNECT BUS 63186
END
CONTINGENCY 'WINGER Y'
DISCONNECT BUS 63187
END
CONTINGENCY 'PICKERTY'
DISCONNECT BUS 63188
END
CONTINGENCY 'MAPLER1Y'
DISCONNECT BUS 63189
END
CONTINGENCY 'MAPLER2Y'
DISCONNECT BUS 63190
END
```

```
CONTINGENCY 'FERGSFLY'
DISCONNECT BUS 63194
END
CONTINGENCY 'BIGSTONY'
DISCONNECT BUS 63195
END
CONTINGENCY 'BEMIDJIY'
DISCONNECT BUS 63196
END
CONTINGENCY 'CASS LKY'
DISCONNECT BUS 63197
END
CONTINGENCY 'WINGER T'
DISCONNECT BUS 66786
END
CONTINGENCY 'WILTON T'
DISCONNECT BUS 66776
END
CONTINGENCY 'WILTON2T'
DISCONNECT BUS 66798
END
CONTINGENCY 'BEMIDJIT'
DISCONNECT BUS 66789
END
CONTINGENCY 'HARVEY Y'
DISCONNECT BUS 63307
END
CONTINGENCY 'ESMOND Y'
DISCONNECT BUS 63306
END
CONTINGENCY 'ROLETTEY'
DISCONNECT BUS 63308
END
CONTINGENCY 'JAMEST2T'
DISCONNECT BUS 66199
END
CONTINGENCY 'GRNDFKST'
DISCONNECT BUS 66200
END
CONTINGENCY 'JAMEST1T'
DISCONNECT BUS 66207
END
CONTINGENCY 'DAWSONCT'
DISCONNECT BUS 66210
END
CONTINGENCY 'FALLON T'
DISCONNECT BUS 66212
END
CONTINGENCY 'MICTYE1T'
DISCONNECT BUS 66216
END
CONTINGENCY 'BELFELDT'
DISCONNECT BUS 66220
END
CONTINGENCY 'FLANDRUT'
DISCONNECT BUS 66226
END
CONTINGENCY 'SIOUXF1T'
DISCONNECT BUS 66231
END
CONTINGENCY 'SIOUXF2T'
DISCONNECT BUS 66234
END
CONTINGENCY 'WATERT1T'
DISCONNECT BUS 66236
END
CONTINGENCY 'WATERT2T'
DISCONNECT BUS 66238
END
CONTINGENCY 'WATERT3T'
DISCONNECT BUS 66241
```

```
END
CONTINGENCY 'MAURIN1T'
DISCONNECT BUS 66246
END
CONTINGENCY 'BERSFRDT'
DISCONNECT BUS 66253
END
CONTINGENCY 'NUNDRWDT'
DISCONNECT BUS 66266
END
CONTINGENCY 'FTTHMP1T'
DISCONNECT BUS 66272
END
CONTINGENCY 'FTTHMP2T'
DISCONNECT BUS 66275
END
CONTINGENCY 'HURON41T'
DISCONNECT BUS 66280
END
CONTINGENCY 'HURON42T'
DISCONNECT BUS 66283
END
CONTINGENCY 'WHITE  T'
DISCONNECT BUS 66292
END
CONTINGENCY 'GRANITFT'
DISCONNECT BUS 66296
END
CONTINGENCY 'SIOUXC1T'
DISCONNECT BUS 66303
END
CONTINGENCY 'SIOUXC2T'
DISCONNECT BUS 66306
END
CONTINGENCY 'SIOUXC3T'
DISCONNECT BUS 66307
END
CONTINGENCY 'SIOUXC4T'
DISCONNECT BUS 66309
END
CONTINGENCY 'FARGOM14'
DISCONNECT BUS 66440
END
CONTINGENCY 'FARGOM24'
DISCONNECT BUS 66446
END
CONTINGENCY 'GROTONTY'
DISCONNECT BUS 67203
END
CONTINGENCY 'DRAYTO1T'
DISCONNECT BUS 66787
END
CONTINGENCY 'DRAYTO2T'
DISCONNECT BUS 66788
END
CONTINGENCY 'CALEDONT'
DISCONNECT BUS 66772
END
CONTINGENCY 'RUNNINNT'
DISCONNECT BUS 66778
END
CONTINGENCY 'RUNNINST'
DISCONNECT BUS 66779
END
CONTINGENCY 'ULRICH T'
DISCONNECT BUS 66781
END
CONTINGENCY 'TRFALLST'
DISCONNECT BUS 66782
END
CONTINGENCY 'DRAYTO1T'
```

```
DISCONNECT BUS 66787
END
CONTINGENCY 'DRAYTO2T'
DISCONNECT BUS 66788
END
CONTINGENCY 'MORANV1T'
DISCONNECT BUS 66790
END
CONTINGENCY 'MORANV2T'
DISCONNECT BUS 66793
END
CONTINGENCY 'MORANV3T'
DISCONNECT BUS 66794
END
CONTINGENCY 'MORANV4T'
DISCONNECT BUS 66795
END
CONTINGENCY 'BASIN TY'
DISCONNECT BUS 67200
END
CONTINGENCY 'LELND1TY'
DISCONNECT BUS 67201
END
CONTINGENCY 'LELND2TY'
DISCONNECT BUS 67202
END
CONTINGENCY 'GROTONTY'
DISCONNECT BUS 67203
END
CONTINGENCY 'BRDLNDTY'
DISCONNECT BUS 67204
END
CONTINGENCY 'STEGALTY'
DISCONNECT BUS 67207
END
CONTINGENCY 'LOGAN TY'
DISCONNECT BUS 67208
END
CONTINGENCY 'SIDNEYTY'
DISCONNECT BUS 67209
END
CONTINGENCY 'CHARCKTY'
DISCONNECT BUS 67211
END
CONTINGENCY 'DGCX3  T'
DISCONNECT BUS 67230
END
CONTINGENCY 'DGCX3  4'
DISCONNECT BUS 67231
END
CONTINGENCY 'DGCX4  T'
DISCONNECT BUS 67233
END
CONTINGENCY 'WARDT   '
DISCONNECT BUS 67299
END
COM CONTINGENCY 'WAYSD T1'
COM DISCONNECT BUS 65011
COM DISCONNECT BUS 65010
COM END
COM *** END THREE WDG TRANSFORMERS ***

END /* END OF CON FILE
```

Appendix D – Power Flow & Stability Data for GI-0503 Unit

Appendix D.1: GI-0503 Power Flow Data

```
0,   100.00          / PSS/E-29.4    WED, DEC 12 2007  13:34
E01-SP09AA.SAV;SUMMER;PK LD;SYSTEM INTACT           :
ND=1345,MH=1382,MW=892,OHMH=0,OHMP=150,EWTW=-120,BD=167
  503,'GI0503 9',  34.5000,1,     0.000,     0.000, 652, 659,1.02245,  15.3727, 659
60503,'GI0503 7', 115.0000,1,     0.000,     0.000, 652,  90,1.03000,  11.9765, 652
90503,'GEN05039',   0.5750,2,     0.000,     0.000, 652, 659,1.02547,  18.0952, 659
0 / END OF BUS DATA, BEGIN LOAD DATA
0 / END OF LOAD DATA, BEGIN GENERATOR DATA
90503,'1 ',   100.500,    -4.689,    32.830,   -48.910,1.03000,60503,   111.689,   0.00000,
0.80000,   0.00000,   0.00000,1.00000,1,  100.0,   100.500,     0.000, 659,1.0000
0 / END OF GENERATOR DATA, BEGIN BRANCH DATA
60139,-60503,'1 ',   0.02123,   0.13043,   0.01811,  120.00,  199.00,  132.00,  0.00000,  0.00000,
0.00000,  0.00000,1,   0.00, 652,1.0000
60503,-66449,'1 ',   0.00867,   0.05327,   0.00739,  120.00,  199.00,  132.00,  0.00000,  0.00000,
0.00000,  0.00000,1,   0.00, 652,1.0000
0 / END OF BRANCH DATA, BEGIN TRANSFORMER DATA
60503,  503,    0,'1 ',1,1,1,   0.00000,   0.00000,2,'        ',1, 659,1.0000
   0.00000,   0.06250,   72.00
1.00000,   0.000,   0.000,  120.00,  120.00,  120.00, 0,     0, 1.50000, 0.51000, 1.50000, 0.51000,
5, 0, 0.00000, 0.00000
1.00000,   0.000
  503,90503,    0,'1 ',1,1,1,   0.00000,   0.00000,2,'        ',1, 659,1.0000
   0.00657,   0.04938,  117.25
1.00000,   0.000,   0.000,  117.25,    0.00,    0.00, 0,     0, 1.10000, 0.90000, 1.10000, 0.90000,
33, 0, 0.00000, 0.00000
1.00000,   0.000
0 / END OF TRANSFORMER DATA, BEGIN AREA DATA
 652,66559,  1194.000,    10.000,'WAPA    '
0 / END OF AREA DATA, BEGIN TWO-TERMINAL DC DATA
0 / END OF TWO-TERMINAL DC DATA, BEGIN VSC DC LINE DATA
0 / END OF VSC DC LINE DATA, BEGIN SWITCHED SHUNT DATA
0 / END OF SWITCHED SHUNT DATA, BEGIN IMPEDANCE CORRECTION DATA
0 / END OF IMPEDANCE CORRECTION DATA, BEGIN MULTI-TERMINAL DC DATA
0 / END OF MULTI-TERMINAL DC DATA, BEGIN MULTI-SECTION LINE DATA
0 / END OF MULTI-SECTION LINE DATA, BEGIN ZONE DATA
 659,'BEPC_659'
0 / END OF ZONE DATA, BEGIN INTER-AREA TRANSFER DATA
0 / END OF INTER-AREA TRANSFER DATA, BEGIN OWNER DATA
 652,'WAPA_652'
 659,'BEPC_659'
0 / END OF OWNER DATA, BEGIN FACTS DEVICE DATA
0 / END OF FACTS DEVICE DATA
```

Appendix D.2: GI-0503 Stability Data

```
     PTI INTERACTIVE POWER SYSTEM SIMULATOR--PSS/E      WED, DEC 12 2007  13:38
 B01-SO09AA.SAV;SUMMER;OP LD;SYSTEM INTACT           :
 ND=2080,MH=2175,MW=1213,OHMH=-197,OHMP=150,EWTW=97,BD=165

 PLANT MODELS

 REPORT FOR ALL MODELS                        BUS 90503 [GEN050390.5750] MODELS


 ** GEDFA **  BUS X-- NAME --X BASEKV MC    C O N S     S T A T E S        VAR         ICON
             90503     GEN05039 0.5750 1  139884-139896  52074-52078   13243-13264    6929

     XEQ        LA        LM        R1        L1        H         DAMP
   0.8000    0.1714    2.9040    0.0050    0.1563    0.5580    0.0000

      -SLIP        TIpcmd      TEqcmd
       0.2000      0.0200      0.0200

      Kpll        PLLMX      PLLMN
      30.0000      0.1000     -0.1000



 ** GECNA for GEDFA **  BUS X-- NAME --X BASEKV MC    C O N S     S T A T E S        VAR
ICON
                        90503     GEN05039 0.5750 1  139897-139922  52079-52088   13265-13274
6930-6933

     TFV      KPV      KIV       RC        XC        TFP         KPP
   0.1500   18.0000    5.0000    0.0000    0.0000    0.0500    2.7000

     KIP       PMX     PMN        QMX        QMN      IPMAX     TRV
   0.5400    1.0100    0.0900    0.2960   -0.4360    1.1100    0.0500

     RPMX      RPMN    T_POWER
   0.4000   -0.4000    5.0000

     KQi     VMINCL    VMAXCL    KVi    XIQmin    XIQmax
   0.0000    0.9000    1.1000   40.0000 -0.5000    0.4000

     Tv       Tp          Fn
   0.0500    0.0500    1.0000


                Remote controlled Bus #     60503
                VARFLG =  0 PFAFLG =  0

     PTI INTERACTIVE POWER SYSTEM SIMULATOR--PSS/E      WED, DEC 12 2007  13:38
 B01-SO09AA.SAV;SUMMER;OP LD;SYSTEM INTACT           :
 ND=2080,MH=2175,MW=1213,OHMH=-197,OHMP=150,EWTW=97,BD=165

 CONEC MODELS

 REPORT FOR ALL MODELS                        BUS 90503 [GEN050390.5750] MODELS


                *** CALL WGUSTA(  6934,139923,     0, 13275) ***


  ** WGUSTA ** BUS X-- NAME --X BASEKV MC    C O N S       V A R S        ICONS
             90503 GEN05039     0.5750 1  139923-139929  13275-13277    6934-6935

     VWB     T1G      TG    MAXG     T1R     T2R    MAXR
  12.0009999.000   5.000  30.0009999.0009999.000  30.000

               Wind generator Bus #  90503
               Wind Generator ID        1
```

```
 ** W2MSFA for a machine **  BUS X-- NAME --X BASEKV MC    C O N S         STATE         VAR
ICON
                        90503     GEN05039 0.5750 1  139930-139934   52089-52090   13278-13280
6936-6938

           D12       K12         Ta1            p         Rq
       1.3500       1.0000       7.7840       3.0000      72.0000


               Wind Generator Bus #  90503
               Wind Generator ID        1


 ** GEAERA for GEDFA **      BUS X-- NAME --X BASEKV MC    C O N S        STATE         VAR
ICON
                        90503     GEN05039 0.5750 1  139935-139946   52091-52091   13281-13284
6939-6941

     VWinit      Lambda_Max      Lambda_Min   PITCH_MAX    PITCH_MIN      Ta
      11.9999      20.0000       0.0000      27.0000      -4.0000       0.0000

       RHO       Radius          GB_RATIO     SYNCHR       Power_Rate      MBASE1
       1.2250      35.2500      72.0000       1200.0       1500.0       1.6670


               Wind Generator Bus #  90503
               Wind Generator ID        1


 ** GEPCHA for GEDFA **  BUS X-- NAME --X BASEKV MC    C O N S         STATE         VAR
ICON
                        90503     GEN05039 0.5750 1  139947-139956   52092-52094   13285-13287
6942-6944

        Tp             Kpp        Kip            Kpc           Kic
       0.3000     150.0000      25.0000       3.0000      30.0000
         TetaMin   TetaMax   RTetaMin   RTetaMax    PMX
         -4.0000   27.0000  -10.0000   10.0000    0.9100


               Wind Generator Bus #  90503
               Wind Generator ID        1

      PTI INTERACTIVE POWER SYSTEM SIMULATOR--PSS/E      WED, DEC 12 2007  13:38
 B01-SO09AA.SAV;SUMMER;OP LD;SYSTEM INTACT           :
 ND=2080,MH=2175,MW=1213,OHMH=-197,OHMP=150,EWTW=97,BD=165

 CONET MODELS

 REPORT FOR ALL MODELS                        BUS 90503 [GEN050390.5750] MODELS


               *** CALL VTGTPA(  6945,139957,     0, 13288) ***

                BUS   NAME  BSKV        GENR BUS   NAME  BSKV   ID
              90503 GEN05039.575           90503 GEN05039.575    1

                  I C O N S      C O N S       V A R
                  6945-6950   139957-139960   13288

                    VLO       VUP      PICKUP     TB
                    0.300     5.000     0.020     0.080


               *** CALL VTGTPA(  6951,139961,     0, 13289) ***

                BUS   NAME  BSKV        GENR BUS   NAME  BSKV   ID
              90503 GEN05039.575           90503 GEN05039.575    1
```

```
     I C O N S      C O N S       V A R
     6951-6956   139961-139964   13289

       VLO       VUP      PICKUP     TB
       0.700     5.000     0.100     0.080


 *** CALL VTGTPA(  6957,139965,     0, 13290) ***

  BUS   NAME  BSKV        GENR BUS   NAME  BSKV   ID
90503 GEN05039.575           90503 GEN05039.575    1

     I C O N S      C O N S       V A R
     6957-6962   139965-139968   13290

       VLO       VUP      PICKUP     TB
       0.750     5.000     1.000     0.080


 *** CALL VTGTPA(  6963,139969,     0, 13291) ***

  BUS   NAME  BSKV        GENR BUS   NAME  BSKV   ID
90503 GEN05039.575           90503 GEN05039.575    1

     I C O N S      C O N S       V A R
     6963-6968   139969-139972   13291

       VLO       VUP      PICKUP     TB
       0.850     5.000    10.000     0.080


 *** CALL VTGTPA(  6969,139973,     0, 13292) ***

  BUS   NAME  BSKV        GENR BUS   NAME  BSKV   ID
90503 GEN05039.575           90503 GEN05039.575    1

     I C O N S      C O N S       V A R
     6969-6974   139973-139976   13292

       VLO       VUP      PICKUP     TB
       0.000     1.100     1.000     0.080


 *** CALL VTGTPA(  6975,139977,     0, 13293) ***

  BUS   NAME  BSKV        GENR BUS   NAME  BSKV   ID
90503 GEN05039.575           90503 GEN05039.575    1

     I C O N S      C O N S       V A R
     6975-6980   139977-139980   13293

       VLO       VUP      PICKUP     TB
       0.000     1.150     0.100     0.080


 *** CALL VTGTPA(  6981,139981,     0, 13294) ***

  BUS   NAME  BSKV        GENR BUS   NAME  BSKV   ID
90503 GEN05039.575           90503 GEN05039.575    1

     I C O N S      C O N S       V A R
     6981-6986   139981-139984   13294

       VLO       VUP      PICKUP     TB
       0.000     1.300     0.020     0.080
```

Appendix E – Constrained Interface Analysis
Case e00 (Without GI-0503) vs. e01 (With GI-0503)

```
***** BASE CASE:
E00-SP09AA.SAV;SUMMER;PK LD;SYSTEM INTACT           :
ND=1259,MH=1380,MW=871,OHMH=0,OHMP=150,EWTW=-121,BD=167

***** ERROR: GETTING LINE FLOW  66550 TO  63365 CKT P1 IERR= 1
***** ERROR: GETTING LINE FLOW  5634 TO  5601 CKT 1 IERR= 1
***** ERROR: GETTING LINE FLOW  66506 TO  67346 CKT 1 IERR= 1
***** ERROR: GETTING LINE FLOW  61626 TO  63345 CKT 1 IERR= 2
***** ERROR: GETTING LINE FLOW  60366 TO  67010 CKT 1 IERR= 1

***** CHNG CASE:
E01-SP09AA.SAV;SUMMER;PK LD;SYSTEM INTACT           :
ND=1345,MH=1382,MW=892,OHMH=0,OHMP=150,EWTW=-120,BD=167


***** BASE TRANSACTION AMOUNT FOR DF CALCULATION:   100.000


## PTDF INTERFACES ##

64786 COOPER 3  - 59393 ST JOE 3   BASE:   301.2 CHNG:   311.0 DIFF:     3.3%
64786 COOPER 3  - 96039 7FAIRPT    BASE:   250.8 CHNG:   257.7 DIFF:     2.7%

SUBTOTALS FOR: COOPER_S            BASE:   552.1 CHNG:   568.7 DIFF:     3.0%
                                                 DIFF:    16.6   DF:    16.6%
*******************************************************************************

60304 EAU CL 3  - 39244 ARP 345    BASE:   520.2 CHNG:   530.0 DIFF:     1.9%

SUBTOTALS FOR: EAUARP__XCEL        BASE:   520.2 CHNG:   530.0 DIFF:     1.9%
                                                 DIFF:     9.8   DF:     9.8%
*******************************************************************************

60101 FORBES 2  - 60198 CHIS-N 2   BASE:   800.2 CHNG:   814.9 DIFF:     1.8%

SUBTOTALS FOR: FORCHS_PTDF         BASE:   800.2 CHNG:   814.9 DIFF:     1.8%
                                                 DIFF:    14.7   DF:    14.7%
*******************************************************************************

65351 S3451  3  - 65354 S3454  3   BASE:   141.1 CHNG:   144.9 DIFF:     2.7%
65351 S3451  3  - 65359 S3459  3   BASE:   180.2 CHNG:   185.9 DIFF:     3.1%
65451 S1251  5  - 65497 S1297  5   BASE:    79.0 CHNG:    80.1 DIFF:     1.4%

SUBTOTALS FOR: FTCAL_S             BASE:   400.3 CHNG:   410.8 DIFF:     2.6%
                                                 DIFF:    10.5   DF:    10.5%
*******************************************************************************

64832 GENTLMN4  - 64909 N.PLATT4   BASE:   160.7 CHNG:   160.6 DIFF:     0.0%
64832 GENTLMN4  - 64909 N.PLATT4   BASE:   161.2 CHNG:   161.1 DIFF:     0.0%
64832 GENTLMN4  - 64909 N.PLATT4   BASE:   164.7 CHNG:   164.6 DIFF:     0.0%
64831 GENTLMN3  - 64984 SWEET W3   BASE:   245.6 CHNG:   245.5 DIFF:    -0.1%
64831 GENTLMN3  - 64984 SWEET W3   BASE:   296.2 CHNG:   296.1 DIFF:     0.0%
64831 GENTLMN3  - 64943 REDWILO3   BASE:   353.4 CHNG:   357.8 DIFF:     1.2%

SUBTOTALS FOR: GGS                 BASE:  1381.8 CHNG:  1385.8 DIFF:     0.3%
                                                 DIFF:     4.0   DF:     4.0%
*******************************************************************************

64933 PAULINE3  - 64902 MOORE  3   BASE:    14.4 CHNG:    17.3 DIFF:    20.5%
64839 GR ISLD4  - 64780 COLMB.W4   BASE:    84.6 CHNG:    83.3 DIFF:    -1.5%
66571 GR ISLD3  - 64896 MCCOOL 3   BASE:   131.3 CHNG:   138.3 DIFF:     5.3%

SUBTOTALS FOR: GRIS_LNC            BASE:   230.3 CHNG:   238.9 DIFF:     3.7%
                                                 DIFF:     8.6   DF:     8.6%
*******************************************************************************
```

```
37632 LEECO;BP  - 36362 NELSO; B   BASE:   262.9 CHNG:   259.4 DIFF:    -1.4%

SUBTOTALS FOR: LEECONELS           BASE:   262.9 CHNG:   259.4 DIFF:    -1.4%
                                                 DIFF:    -3.6   DF:    -3.6%
*******************************************************************************

60175 ROSEAU 4  - 67576 RICHER 4   BASE:   -96.2 CHNG:   -97.6 DIFF:     1.5%
60173 ROSEAUN2  - 67564 DORSEY 2   BASE: -1124.2 CHNG: -1140.2 DIFF:     1.4%
66752 DRAYTON4  - 67557 LETELER4   BASE:  -226.5 CHNG:  -221.5 DIFF:    -2.2%
63379 RUGBY  4  - 67523 GLENBOR4   BASE:    89.6 CHNG:   100.9 DIFF:    12.5%

SUBTOTALS FOR: MHEX_N+             BASE: -1357.3 CHNG: -1358.5 DIFF:     0.1%
                                                 DIFF:    -1.3   DF:    -1.3%
*******************************************************************************

67576 RICHER 4  - 60175 ROSEAU 4   BASE:    97.3 CHNG:    98.8 DIFF:     1.5%
67564 DORSEY 2  - 60173 ROSEAUN2   BASE:  1140.8 CHNG:  1157.2 DIFF:     1.4%
67557 LETELER4  - 66752 DRAYTON4   BASE:   230.6 CHNG:   225.4 DIFF:    -2.2%
67523 GLENBOR4  - 63379 RUGBY  4   BASE:   -87.9 CHNG:   -98.7 DIFF:    12.2%

SUBTOTALS FOR: MHEX_S+             BASE:  1380.8 CHNG:  1382.8 DIFF:     0.1%
                                                 DIFF:     2.1   DF:     2.1%
*******************************************************************************

68613 AUBURNT4  - 67525 RESTON 4   BASE:   -26.6 CHNG:   -26.6 DIFF:     0.2%
68615 YORKTON4  - 67514 ROBLIN 4   BASE:  -119.5 CHNG:  -119.2 DIFF:    -0.3%
68630 EBCAMPB4  - 67515 RALL   4   BASE:   -81.0 CHNG:   -80.6 DIFF:    -0.4%

SUBTOTALS FOR: MH_SPC_E+           BASE:  -227.1 CHNG:  -226.4 DIFF:    -0.3%
                                                 DIFF:     0.6   DF:     0.6%
*******************************************************************************

67525 RESTON 4  - 68613 AUBURNT4   BASE:    26.6 CHNG:    26.7 DIFF:     0.2%
67514 ROBLIN 4  - 68615 YORKTON4   BASE:   120.9 CHNG:   120.6 DIFF:    -0.3%
67515 RALL   4  - 68630 EBCAMPB4   BASE:    82.6 CHNG:    82.2 DIFF:    -0.4%

SUBTOTALS FOR: MH_SPC_W+           BASE:   230.2 CHNG:   229.5 DIFF:    -0.3%
                                                 DIFF:    -0.6   DF:    -0.6%
*******************************************************************************

64095 MNTZUMA3  - 64064 BONDRNT3   BASE:  -137.7 CHNG:  -147.5 DIFF:     7.2%

SUBTOTALS FOR: MNTZUMA_W           BASE:  -137.7 CHNG:  -147.5 DIFF:     7.2%
                                                 DIFF:    -9.8   DF:    -9.8%
*******************************************************************************

60105 PR ISLD3  - 61950 BYRON  3   BASE:   351.0 CHNG:   362.3 DIFF:     3.2%
60304 EAU CL 3  - 39244 ARP 345    BASE:   520.2 CHNG:   530.0 DIFF:     1.9%

SUBTOTALS FOR: MWSI                BASE:   871.1 CHNG:   892.3 DIFF:     2.4%
                                                 DIFF:    21.2   DF:    21.2%
*******************************************************************************

66756 SQBUTTE4  - 63049 STANTON4   BASE:   -49.6 CHNG:   -55.4 DIFF:    11.8%
66756 SQBUTTE4  - 66751 CENTER 4   BASE:   -31.2 CHNG:   -27.0 DIFF:   -13.3%
66756 SQBUTTE4  - 66791 CENTER 3   BASE:    79.1 CHNG:    80.8 DIFF:     2.2%
63041 COAL CR4  - 63042 COAL TP4   BASE:    -8.9 CHNG:   -11.0 DIFF:    23.7%
63041 COAL CR4  - 63049 STANTON4   BASE:  -105.8 CHNG:  -103.5 DIFF:    -2.2%
63041 COAL CR4  - 63381 UNDERWD4   BASE:   112.5 CHNG:   112.3 DIFF:    -0.2%

SUBTOTALS FOR: NDDC                BASE:    -3.8 CHNG:    -3.8 DIFF:     0.1%
                                                 DIFF:     0.0   DF:     0.0%
*******************************************************************************

67105 LELANDO3  - 66506 FTTHOMP3   BASE:   257.3 CHNG:   270.1 DIFF:     5.0%
67105 LELANDO3  - 67160 GROTON 3   BASE:   261.1 CHNG:   272.6 DIFF:     4.4%
67101 ANTELOP3  - 67120 BRDLAND3   BASE:   260.2 CHNG:   270.6 DIFF:     4.0%
63314 BIGSTON4  - 66503 BLAIR  4   BASE:   194.5 CHNG:   197.6 DIFF:     1.6%
66554 MORRIS 4  - 66550 GRANITF4   BASE:     2.5 CHNG:     6.3 DIFF:   152.2%
63336 AUDUBON4  - 63053 HUBBARD4   BASE:   118.1 CHNG:   123.0 DIFF:     4.1%
66521 SULLYBT4  - 66519 OAHE   4   BASE:    32.8 CHNG:    40.4 DIFF:    23.3%
```

```
63052 INMAN  4  - 61611 WINGRIV4   BASE:   118.5 CHNG:   122.7 DIFF:     3.6%
66470 BISON  4  - 66497 MAURINE4   BASE:    10.2 CHNG:    14.5 DIFF:    42.9%
66716 LAPORTE7  - 61638 AKELEY7    BASE:     6.5 CHNG:     8.4 DIFF:    28.3%
63222 ALEXAND7  - 60144 DGLASCO7   BASE:    35.0 CHNG:    36.1 DIFF:     3.2%
67327 ELLENDL7  - 67401 ABDNJCT7   BASE:    57.8 CHNG:    59.2 DIFF:     2.4%
66432 EDGELEY7  - 66534 ORDWAY 7   BASE:     3.9 CHNG:     5.2 DIFF:    30.9%
66438 FORMAN 7  - 66522 SUMMIT-7   BASE:     5.8 CHNG:     6.9 DIFF:    18.2%
63211 CANBY  7  - 66551 GRANITF7   BASE:    32.6 CHNG:    33.3 DIFF:     2.1%
62006 KERKHO 7  - 62005 KERKHOT7   BASE:     5.3 CHNG:     5.9 DIFF:    12.2%
66752 DRAYTON4  - 67557 LETELER4   BASE:  -230.6 CHNG:  -225.4 DIFF:    -2.2%
63379 RUGBY  4  - 67523 GLENBOR4   BASE:    87.9 CHNG:    98.7 DIFF:    12.2%
63365 ********  - 66550 GRANITF4   BASE:     0.0 CHNG:     0.0 DIFF:   999.0%
5601  ********  - 5634  ********   BASE:     0.0 CHNG:     0.0 DIFF:   999.0%
67346 ********  - 66506 FTTHOMP3   BASE:     0.0 CHNG:     0.0 DIFF:   999.0%
63345 WILTON 4  - 61626 BOSWELL4   BASE:     0.0 CHNG:     0.0 DIFF:   999.0%
67010 ********  - 60366 ********   BASE:     0.0 CHNG:     0.0 DIFF:   999.0%

SUBTOTALS FOR: NDEX                BASE:  1259.5 CHNG:  1345.9 DIFF:     6.9%
                                          DIFF:    86.4   DF:    86.4%
*******************************************************************************

60105 PR ISLD3  - 61950 BYRON  3   BASE:   351.0 CHNG:   362.3 DIFF:     3.2%

SUBTOTALS FOR: PR_ISL_BYRON        BASE:   351.0 CHNG:   362.3 DIFF:     3.2%
                                          DIFF:    11.4   DF:    11.4%
*******************************************************************************

36382 QUAD ;    - 64405 SUB 91 3   BASE:   379.0 CHNG:   372.4 DIFF:    -1.7%
64400 MECCORD3  - 64403 E MOLIN3   BASE:   268.6 CHNG:   264.4 DIFF:    -1.6%

SUBTOTALS FOR: QUADCITY_W          BASE:   647.7 CHNG:   636.8 DIFF:    -1.7%
                                          DIFF:   -10.9   DF:   -10.9%
*******************************************************************************

64831 GENTLMN3  - 64943 REDWILO3   BASE:   353.4 CHNG:   357.8 DIFF:     1.2%

SUBTOTALS FOR: WNE_WKS             BASE:   353.4 CHNG:   357.8 DIFF:     1.2%
                                          DIFF:     4.4   DF:     4.4%
*******************************************************************************

66756 SQBUTTE4  - 63049 STANTON4   BASE:   -49.6 CHNG:   -55.4 DIFF:    11.8%
66756 SQBUTTE4  - 66751 CENTER 4   BASE:   -31.2 CHNG:   -27.0 DIFF:   -13.3%
66756 SQBUTTE4  - 66791 CENTER 3   BASE:    79.1 CHNG:    80.8 DIFF:     2.2%

SUBTOTALS FOR: Y2DC                BASE:    -1.7 CHNG:    -1.7 DIFF:     0.3%
                                          DIFF:     0.0   DF:     0.0%
*******************************************************************************

61615 ARROWHD4  - 39448 AWHD PST   BASE:   388.5 CHNG:   395.9 DIFF:     1.9%

SUBTOTALS FOR: AHD_GPK             BASE:   388.5 CHNG:   395.9 DIFF:     1.9%
                                          DIFF:     7.5   DF:     7.5%
*******************************************************************************


## OTDF INTERFACES ##

36382 QUAD ;    - 36368 H471 ;     *CONTINGENCY* BASE:     0.0 CHNG:     0.0
-------------------------------------------------------------------------------
34045 ALBANY 6  - 36773 GARDE;     BASE:    81.2 CHNG:    82.8 DIFF:     1.9%

SUBTOTALS FOR: ALBGARQUAST         BASE:    81.2 CHNG:    82.8 DIFF:     1.9%
                                          DIFF:     1.6   DF:     1.6%
*******************************************************************************

34093 ARNOLD 3  - 34018 HAZLTON3   *CONTINGENCY* BASE:     0.0 CHNG:     0.0
-------------------------------------------------------------------------------
34091 ARNOLD 5  - 34089 VINTON 5   BASE:    74.9 CHNG:    71.3 DIFF:    -4.9%

SUBTOTALS FOR: ARNVINARNHAZ        BASE:    74.9 CHNG:    71.3 DIFF:    -4.9%
```

```
                                                DIFF:    -3.6   DF:    -3.6%
*******************************************************************************

36280 BYRON; B  - 36288 CHERR; B   *CONTINGENCY* BASE:     0.0 CHNG:     0.0
-------------------------------------------------------------------------------
36281 BYRON; R  - 36289 CHERR; R   BASE:  1439.7 CHNG:  1443.2 DIFF:     0.2%

SUBTOTALS FOR: BYCHEBYCHE          BASE:  1439.7 CHNG:  1443.2 DIFF:     0.2%
                                                DIFF:     3.6   DF:     3.6%
*******************************************************************************

36382 QUAD ;    - 34036 ROCK CK3   *CONTINGENCY* BASE:     0.0 CHNG:     0.0
-------------------------------------------------------------------------------
64425 DAVNPRT5  - 34122 E CALMS5   BASE:     0.0 CHNG:     0.0 DIFF:   999.0%

SUBTOTALS FOR: DAVCALQUARCK        BASE:     0.0 CHNG:     0.0 DIFF:   999.0%
                                                DIFF:     0.0   DF:     0.0%
*******************************************************************************

64352 TIFFIN 3  - 34093 ARNOLD 3   *CONTINGENCY* BASE:     0.0 CHNG:     0.0
-------------------------------------------------------------------------------
64350 HILLS  3  - 34110 HILLSIE5   BASE:    71.2 CHNG:    68.8 DIFF:    -3.4%

SUBTOTALS FOR: HLSXFMTIFARN        BASE:    71.2 CHNG:    68.8 DIFF:    -3.4%
                                                DIFF:    -2.4   DF:    -2.4%
*******************************************************************************

57981 LACYGNE7  - 57968 STILWEL7   *CONTINGENCY* BASE:     0.0 CHNG:     0.0
-------------------------------------------------------------------------------
57981 LACYGNE7  - 57965 W.GRDNR7   BASE:   966.7 CHNG:   962.0 DIFF:    -0.5%

SUBTOTALS FOR: LACWGRLACSTI        BASE:   966.7 CHNG:   962.0 DIFF:    -0.5%
                                                DIFF:    -4.7   DF:    -4.7%
*******************************************************************************

36310 ELECT; B  - 36362 NELSO; B   *CONTINGENCY* BASE:     0.0 CHNG:     0.0
-------------------------------------------------------------------------------
37632 LEECO;BP  - 36280 BYRON; B   BASE:   769.0 CHNG:   776.3 DIFF:     0.9%

SUBTOTALS FOR: LEEBYREJNEL         BASE:   769.0 CHNG:   776.3 DIFF:     0.9%
                                                DIFF:     7.3   DF:     7.3%
*******************************************************************************

***** ERROR: OTDF #  8 CHNG CASE LAST SOLUTION DID NOT REACH TOLERANCE, FIX AND RERUN
PROGRAM

60331 LKFLDXL3  - 60108 WILMART3   *CONTINGENCY* BASE:     0.0 CHNG:     0.0
-------------------------------------------------------------------------------
34007 LAKEFLD5  - 34008 FOX LK 5   BASE:    45.0 CHNG:    45.4 DIFF:     0.9%

SUBTOTALS FOR: LKFFOXLKGWLM        BASE:    45.0 CHNG:    45.4 DIFF:     0.9%
                                                DIFF:     0.4   DF:     0.4%
*******************************************************************************

36407 WEMPL; R  - 39058 PAD 345    *CONTINGENCY* BASE:     0.0 CHNG:     0.0
-------------------------------------------------------------------------------
34028 LORE   5  - 34033 TRK RIV5   BASE:    97.3 CHNG:    96.5 DIFF:    -0.8%

SUBTOTALS FOR: LORTRKWEMPAD        BASE:    97.3 CHNG:    96.5 DIFF:    -0.8%
                                                DIFF:    -0.8   DF:    -0.8%
*******************************************************************************

39058 PAD 345   - 36407 WEMPL; R   *CONTINGENCY* BASE:     0.0 CHNG:     0.0
36407 WEMPL; R  - 36406 WEMPL; B   *CONTINGENCY* BASE:     0.0 CHNG:     0.0
36406 WEMPL; B  - 39119 ROE 345    *CONTINGENCY* BASE:     0.0 CHNG:     0.0
-------------------------------------------------------------------------------
39058 PAD 345   - 39059 PAD 138    BASE:     0.0 CHNG:     0.0 DIFF:  -392.1%

SUBTOTALS FOR: PADXFMPADROE        BASE:     0.0 CHNG:     0.0 DIFF:  -392.1%
                                                DIFF:     0.0   DF:     0.0%
*******************************************************************************
```

```
64095 MNTZUMA3  - 64064 BONDRNT3   *CONTINGENCY* BASE:     0.0 CHNG:     0.0
-------------------------------------------------------------------------------
34185 POWESHK5  - 34191 REASNOR5   BASE:   -28.1 CHNG:   -31.9 DIFF:    13.5%

SUBTOTALS FOR: POWREAMTZBON        BASE:   -28.1 CHNG:   -31.9 DIFF:    13.5%
                                                 DIFF:    -3.8   DF:    -3.8%
*******************************************************************************

65351 S3451  3  - 63875 RAUN   3   *CONTINGENCY* BASE:     0.0 CHNG:     0.0
-------------------------------------------------------------------------------
65426 S1226  5  - 64987 TEKAMAH5   BASE:    -4.2 CHNG:    -8.2 DIFF:    97.0%

SUBTOTALS FOR: S1226TEKAMAH        BASE:    -4.2 CHNG:    -8.2 DIFF:    97.0%
                                                 DIFF:    -4.0   DF:    -4.0%
*******************************************************************************

36382 QUAD ;    - 64405 SUB 91 3   *CONTINGENCY* BASE:     0.0 CHNG:     0.0
-------------------------------------------------------------------------------
34029 SALEM  3  - 34030 SALEM N5   BASE:   258.7 CHNG:   256.2 DIFF:    -1.0%

SUBTOTALS FOR: SALXFMQUADAV        BASE:   258.7 CHNG:   256.2 DIFF:    -1.0%
                                                 DIFF:    -2.6   DF:    -2.6%
*******************************************************************************

36407 WEMPL; R  - 39058 PAD 345    *CONTINGENCY* BASE:     0.0 CHNG:     0.0
-------------------------------------------------------------------------------
34029 SALEM  3  - 34030 SALEM N5   BASE:   241.7 CHNG:   239.5 DIFF:    -0.9%

SUBTOTALS FOR: SALXFMWEMPAD        BASE:   241.7 CHNG:   239.5 DIFF:    -0.9%
                                                 DIFF:    -2.1   DF:    -2.1%
*******************************************************************************

63875 RAUN   3  - 34006 LAKEFLD3   *CONTINGENCY* BASE:     0.0 CHNG:     0.0
-------------------------------------------------------------------------------
66563 SPENCER5  - 34137 TRIBOJI5   BASE:   -98.9 CHNG:  -101.1 DIFF:     2.2%

SUBTOTALS FOR: SPETRILAKRAU        BASE:   -98.9 CHNG:  -101.1 DIFF:     2.2%
                                                 DIFF:    -2.2   DF:    -2.2%
*******************************************************************************

56873 SUMMIT 6  - 56872 EMCPHER6   *CONTINGENCY* BASE:     0.0 CHNG:     0.0
-------------------------------------------------------------------------------
57374 SPHILPJ3  - 57438 WMCPHER3   BASE:    -6.4 CHNG:    -6.7 DIFF:     3.8%
57374 SPHILPJ3  - 57438 WMCPHER3   BASE:    -7.1 CHNG:    -7.4 DIFF:     4.1%

SUBTOTALS FOR: SPHWMCSUMEMC        BASE:   -13.6 CHNG:   -14.1 DIFF:     4.0%
                                                 DIFF:    -0.5   DF:    -0.5%
*******************************************************************************
```

APPENDIX F – NEAR-TERM STEADY-STATE ANALYSIS RESULTS WITH B10T AT 165 MW NORTH

Appendix F.1: Summary for Case n00-sp09aa.sav (Without GI-0503)

```
N00-SP09AA.SAV;SUMMER;PK LD;SYSTEM INTACT           :
ND=937,MH=1379,MW=795,OHMH=0,OHMP=150,EWTW=-119,BD=-164


                    P O W E R   F L O W   S U M M A R Y
-----------------------------------------------------------------------------
               NDEX:       937 MW         ECL-ARP:  483 MW
               MHEX:      1379 MW         PRI-BYN:  311 MW
               MWSI:       795 MW         AHD-GPK:  364 MW
                                          NI-WUMS:  265 MW
               COOPER S:   488 MW         WNE-WKS:  336 MW
               FTCAL S:    361 MW         GGS:     1365 MW
               GRIS-LNC:   195 MW         QC WEST:  687 MW

           LOAD LEVELS AS PERCENT OF 2009 SUMMER PEAK:
           NORTH DAKOTA (ZONE 90,990) 3178.6 MW, 108.7% OF  2925.0 MW
           NSP             (AREA 600)  9647.7 MW, 100.2% OF  9632.0 MW
           MAN HYDRO       (AREA 667) 2964.0 MW, 100.0% OF  2964.0 MW

Load/Losses   MW  / MW       Generation        MW       Export            MW
----------- ------ -----     --------------- ------     --------------- ------
Manitoba      2963/ 269      MH total gross    4780     SPARE                0
Ont. total   23241/ 566         Wpg River       534     SPARE                0
     NW          0/   0         7 Sisters       165     SPARE                0
Sask.         3084/ 104      OH total gross   23417     East Bias          203
MP            2200/ 106         northwest         0     SPC>WAPA (B10T)   -164
NSP           9647/ 280      SPC total gross   2856     MH>SPC  (3-230)    231
N. Dakota     3178/ 302      MP total gross    2080     MH>SPC  (FALLS)    -63
Manitoba       688 MVARS     ND Cfd AC gross   3277     OH>MH  @Kenora       0
Ont. total   13541 MVARS              net      3107     OH>MP  @Ft Fran    150
     NW          0 MVARS     NSP East gross    2377     OH E>W @Wawa      -119
Sask.          725 MVARS              net      2284     OH>East USA          0
MP             594 MVARS         West gross    2638     F601C  @Forbes     755
NSP           1624 MVARS              net      2495     D602F  @Dorsey    1091
N. Dakota      686 MVARS         Total net     9306     L20D   @Letell     248
                              WAPA SD Hydro        0     R50M   @Richer      92
                              Pleasant Valley    422     G82R   @Glenboro   -52
                              LGS/Trimont        246
                              SW MN Wind         825
                              Swing Bus         3346


Tfmrs          MVA/ Load     Ph Shifters  Deg/  MW      DC Lines          MW
------------- ---- -----     ------------ --- -----     --------------- ------
Wshell #1 7-7   43/  29%     Stinson       -1/  110     CU (1,2)         1104
Wshell #2 7-7   43/  29%     Boundary Dam -25/ -164     SQ BU (3,4)       455
Drayton#1 4-7   57/  40%     Whiteshell   -13/    0     MH Bipole 1      1406
Drayton#2 4-7   73/  39%     Int Falls    -12/  150     MH Bipole 2      1592
Dorsey #1 2-4  511/  42%     St. Lawrence  16/    0     MH (BP1+BP2)     2998
Dorsey #2 2-4  600/  50%                                Miles City E>W    200
Forbes    2-4  163/  24%                                RCDC (15)         199
                                                        Stegall (10)        0

Dorsey SC's       I/S  MVAR  Qmax/ Qmin    SVC's              MVAR  Qmax/ Qmin
----------------- --- -----  ---- -----    ----------------- -----  ---- -----
MIL 7-9G     17.0  2    348   600/ -330    Forbes        500    -7   400/ -450
SCE 1-3G     18.2  3    284   480/ -240    Fargo        13.2   -20    20/ -135
SCA 4-6G     18.2  3    284   480/ -240    Watertown    20.0    10   125/  -86
                        -----  ---- -----
       Total            917  1560/ -810    Series Caps       Num In Serv
       Margin           643                ----------------- -----------
                                           Roseau        500   2 of 2
                                           Chisago       500   1 of 1


Caps/Reactors       MVAR   Caps/Reactors       MVAR   Caps/Reactors       MVAR
------------------ -----   ----------------- -----   ----------------- -----
Balta     (FS) 230     0   Arrowhead      230   120   Chisago T  9  34.5    25
Drayton        115    40   Blackberry     230    47   Chisago T 10  34.5    25
Drayton       13.8     0   Minntac        115    45   Forbes         230     0
Eau Claire(FS) 161   267   Riverton       230    47   Forbes         500   300
Kohlman Lake   115   240   Roseau Co.(FS) 230    30                           0
```

Appendix F.1: Summary for Case n00-sp09aa.sav (Without GI-0503)

Parkers Lk(FS)	115	0	Running (FS)	230	30	Fargo	115	54
Prairie (FS)	115	80	Running react	230	-20	Watertown	20	20
Ramsey (FS)	230	0	Shannon	230	0	Watertown	230	0
Red Rock	115	240			0			0
Rugby	13.8	-25	Glenboro	230	0			0
Split Rock(FS)	115	0	Laverendrye	110	98			0
Sheyenne (FS)	115	120	Richer react	230	0			0
Wilton/Bemidji	115	43	St Vital	110	98			0

Bus Voltages		V,pu	Bus Voltages		V,pu	Bus Voltages		V,kV
Adams	345	1.029	Arrowhead	230	1.019	Whiteshell	110	119.1
Alexandria	115	1.053	Badoura	115	1.006	Kenora	220	249.1
Audubon	115	1.024	Blackberry	230	1.033	Dryden	220	252.5
Bemidji	115	1.012	Boise Cascade	13.8	1.028	Fort Frances	220	252.3
Byron	345	1.037	Boise Cascade	115	1.017	Mackenzie	220	253.6
Chisago Co.	345	1.038	ETCO	115	1.015	Lakehead	220	239.7
Chisago Co.	500	1.040	Forbes	230	1.035	Marathon	220	240.8
Drayton	230	1.023	Forbes	500	1.041	Wawa	220	238.2
Eau Claire	345	1.018	Hubbard	115	0.990	Mississagi	220	242.9
WEST FARIBAULT	115	1.040	Intl Falls	115	1.019	Fort Frances	118	120.3
LaPorte	115	1.002	Minntac	115	1.020	Lakehead	118	124.2
Maple River	230	1.027	Moranville	230	1.029	Birch	118	120.4
Marshall Tap	115	1.012	Riverton	230	1.017	Marathon	118	125.6
Owatonna	161	1.014	Running	230	1.025			0.0
Prairie	115	1.033	Shannon	230	1.026			0.0
Prairie	230	1.023			0.000			0.0
Ramsey	230	1.001	Groton	345	1.021			0.0
Roseau County	230	1.031	Watertown	230	1.030			0.0
Roseau County	500	1.066	Watertown	345	1.031			0.0
Sheyenne	230	1.032			0.000			0.0
Thief R Falls	115	1.008	Dorsey	230	1.045			0.0
Tioga	230	1.018	Dorsey	500	1.035			0.0
Wahpeton	230	1.006			0.000			0.0
Winger	115	1.029			0.000			0.0

Steady State Relay Margins (measured from inner blinder)

Relay Location	Manuf/Type	PSS Model	South	North	Em North
1) B10T-Tioga (South)	GE OST	SLLP	N/A		
2) -Tioga (North)	GE OST	SLLP	N/A	620%	
3) -Tioga (Em North)	GE OST	SLLP	N/A		569%
4) D602F-Dorsey	ATP ???	SLINOS	881%	N/A	N/A
5) -Forbes (Normal)	ATP ???	SLINOS	564%	N/A	N/A
6) -Forbes (Em Nrth)	APT S-PRO	SLINOS		N/A	N/A
8) F3M-Intl Falls	APT S-PRO	SLINOS	330%	N/A	N/A
9) G82R-Rugby	APT	SLINOS	N/A	972%	
10) L20D-Drayton (Normal)	APT, ASEA	SLINOS	815%	N/A	N/A
11) -Drayton (Em Nrth)	ASEA RXZF2	SLINOS		N/A	N/A
12) R50M-Moranville (Norm)	APT, West	SLINOS	1509%	N/A	N/A
13) -Moranville (Em N)	ASEA RXZF2	SLINOS		N/A	N/A

Appendix F.2: Summary for Case n02-sp09aa.sav (With GI-0503 at 125 MW)

```
N02-SP09AA.SAV;SUMMER;PK LD;SYSTEM INTACT           :
ND=1050,MH=1379,MW=822,OHMH=0,OHMP=150,EWTW=-119,BD=-164


                    P O W E R   F L O W   S U M M A R Y
-----------------------------------------------------------------------------
               NDEX:      1050 MW         ECL-ARP:  496 MW
               MHEX:      1379 MW         PRI-BYN:  326 MW
               MWSI:       822 MW         AHD-GPK:  373 MW
                                          NI-WUMS:  264 MW
               COOPER S:   510 MW         WNE-WKS:  342 MW
               FTCAL S:    375 MW         GGS:     1370 MW
               GRIS-LNC:   207 MW         QC WEST:  672 MW

           LOAD LEVELS AS PERCENT OF 2009 SUMMER PEAK:
           NORTH DAKOTA (ZONE 90,990) 3178.6 MW, 108.7% OF  2925.0 MW
           NSP             (AREA 600)  9647.7 MW, 100.2% OF  9632.0 MW
           MAN HYDRO       (AREA 667) 2964.0 MW, 100.0% OF  2964.0 MW

Load/Losses   MW  / MW       Generation        MW       Export            MW
----------- ------ -----     --------------- ------     --------------- ------
Manitoba      2963/ 268      MH total gross    4780     SPARE                0
Ont. total   23241/ 566         Wpg River       534     SPARE                0
     NW          0/   0         7 Sisters       165     SPARE                0
Sask.         3084/ 104      OH total gross   23417     East Bias          215
MP            2200/ 106         northwest         0     SPC>WAPA (B10T)   -164
NSP           9647/ 285      SPC total gross   2857     MH>SPC  (3-230)    231
N. Dakota     3178/ 313      MP total gross    2080     MH>SPC  (FALLS)    -63
Manitoba       688 MVARS     ND Cfd AC gross   3277     OH>MH  @Kenora       0
Ont. total   13541 MVARS              net      3107     OH>MP  @Ft Fran    150
     NW          0 MVARS     NSP East gross    2377     OH E>W @Wawa      -119
Sask.          725 MVARS              net      2284     OH>East USA          0
MP             594 MVARS         West gross    2638     F601C  @Forbes     771
NSP           1624 MVARS              net      2495     D602F  @Dorsey    1109
N. Dakota      686 MVARS         Total net     9306     L20D   @Letell     242
                              WAPA SD Hydro        0     R50M   @Richer      94
                              Pleasant Valley    422     G82R   @Glenboro   -66
                              LGS/Trimont        246
                              SW MN Wind         825
                              Swing Bus         3379


Tfmrs          MVA/ Load     Ph Shifters  Deg/  MW      DC Lines          MW
------------- ---- -----     ------------ --- -----     --------------- ------
Wshell #1 7-7   43/  29%     Stinson       -1/  109     CU (1,2)         1104
Wshell #2 7-7   42/  29%     Boundary Dam -22/ -163     SQ BU (3,4)       455
Drayton#1 4-7   56/  40%     Whiteshell   -10/    0     MH Bipole 1      1406
Drayton#2 4-7   72/  38%     Int Falls    -10/  150     MH Bipole 2      1592
Dorsey #1 2-4  519/  43%     St. Lawrence  16/    0     MH (BP1+BP2)     2998
Dorsey #2 2-4  606/  50%                                Miles City E>W    200
Forbes    2-4  162/  24%                                RCDC (15)         199
                                                        Stegall (10)        0

Dorsey SC's       I/S  MVAR  Qmax/ Qmin    SVC's              MVAR  Qmax/ Qmin
----------------- --- -----  ---- -----    ----------------- -----  ---- -----
MIL 7-9G     17.0  2    358   600/ -330    Forbes        500   -47   400/ -450
SCE 1-3G     18.2  3    292   480/ -240    Fargo        13.2   -10    20/ -135
SCA 4-6G     18.2  3    292   480/ -240    Watertown    20.0    -1   125/  -86
                        -----  ---- -----
       Total            942  1560/ -810    Series Caps       Num In Serv
       Margin           618                 ----------------- -----------
                                            Roseau        500   2 of 2
                                            Chisago       500   1 of 1


Caps/Reactors       MVAR   Caps/Reactors       MVAR   Caps/Reactors       MVAR
------------------ -----   ------------------ -----   ------------------ -----
Balta     (FS) 230     0   Arrowhead      230   120   Chisago T  9  34.5    25
Drayton        115    40   Blackberry     230    47   Chisago T 10  34.5    25
Drayton       13.8     0   Minntac        115    45   Forbes         230     0
Eau Claire(FS) 161   267   Riverton       230    47   Forbes         500   300
Kohlman Lake   115   240   Roseau Co.(FS) 230    30                          0
```

Appendix F.2: Summary for Case n02-sp09aa.sav (With GI-0503 at 125 MW)

Parkers Lk(FS)	115	0	Running (FS)	230	30	Fargo	115	54
Prairie (FS)	115	80	Running react	230	-20	Watertown	20	20
Ramsey (FS)	230	0	Shannon	230	0	Watertown	230	0
Red Rock	115	240			0			0
Rugby	13.8	-25	Glenboro	230	0			0
Split Rock(FS)	115	0	Laverendrye	110	98			0
Sheyenne (FS)	115	120	Richer react	230	0			0
Wilton/Bemidji	115	43	St Vital	110	98			0

Bus Voltages		V,pu	Bus Voltages		V,pu	Bus Voltages		V,kV
Adams	345	1.029	Arrowhead	230	1.016	Whiteshell	110	119.1
Alexandria	115	1.052	Badoura	115	1.005	Kenora	220	249.0
Audubon	115	1.022	Blackberry	230	1.031	Dryden	220	252.5
Bemidji	115	1.011	Boise Cascade	13.8	1.027	Fort Frances	220	252.2
Byron	345	1.037	Boise Cascade	115	1.017	Mackenzie	220	253.6
Chisago Co.	345	1.036	ETCO	115	1.012	Lakehead	220	239.7
Chisago Co.	500	1.036	Forbes	230	1.031	Marathon	220	241.0
Drayton	230	1.022	Forbes	500	1.035	Wawa	220	238.5
Eau Claire	345	1.016	Hubbard	115	0.988	Mississagi	220	243.5
WEST FARIBAULT	115	1.039	Intl Falls	115	1.018	Fort Frances	118	120.3
LaPorte	115	1.000	Minntac	115	1.017	Lakehead	118	124.2
Maple River	230	1.024	Moranville	230	1.028	Birch	118	120.4
Marshall Tap	115	1.012	Riverton	230	1.016	Marathon	118	125.7
Owatonna	161	1.013	Running	230	1.023			0.0
Prairie	115	1.029	Shannon	230	1.023			0.0
Prairie	230	1.020			0.000			0.0
Ramsey	230	0.996	Groton	345	1.033			0.0
Roseau County	230	1.030	Watertown	230	1.030			0.0
Roseau County	500	1.064	Watertown	345	1.033			0.0
Sheyenne	230	1.030			0.000			0.0
Thief R Falls	115	1.006	Dorsey	230	1.045			0.0
Tioga	230	1.019	Dorsey	500	1.034			0.0
Wahpeton	230	1.004			0.000			0.0
Winger	115	1.027			0.000			0.0

Steady State Relay Margins (measured from inner blinder)

Relay Location	Manuf/Type	PSS Model	South	North	Em North
1) B10T-Tioga (South)	GE OST	SLLP	N/A		
2) -Tioga (North)	GE OST	SLLP	N/A	623%	
3) -Tioga (Em North)	GE OST	SLLP	N/A		573%
4) D602F-Dorsey	ATP ???	SLINOS	857%	N/A	N/A
5) -Forbes (Normal)	ATP ???	SLINOS	546%	N/A	N/A
6) -Forbes (Em Nrth)	APT S-PRO	SLINOS		N/A	N/A
8) F3M-Intl Falls	APT S-PRO	SLINOS	329%	N/A	N/A
9) G82R-Rugby	APT	SLINOS	N/A	819%	
10) L20D-Drayton (Normal)	APT, ASEA	SLINOS	839%	N/A	N/A
11) -Drayton (Em Nrth)	ASEA RXZF2	SLINOS		N/A	N/A
12) R50M-Moranville (Norm)	APT, West	SLINOS	1463%	N/A	N/A
13) -Moranville (Em N)	ASEA RXZF2	SLINOS		N/A	N/A

Appendix F.3: Thermal Results with B10T @ 165 MW S>N (Contd.)

CIRCUIT FROM: CIRCUIT TO: CKT	CONTINGENCY		RATEA	WITHOUT GI-0503		WITH GI-0503	
# NAME # NAME	FROM TO CKT	SWITCH	MVA	%	MVA	%	MVA
60139 MALLARD7 115 66449 MAX 7 115 1	SYSTEM INTACT		120.0	60.1	72.2		
	67106 LELANDO4 230 67108 LOGAN 4 230 1			112.6	135.1		
	LELANDO-LOGAN 230 W/ B10T LIMITED TO 75 N			94.4	113.3		
60139 MALLARD7 115 60503 GI0503 7 115 1	SYSTEM INTACT		120.0			112.3	134.7
	67106 LELANDO4 230 67108 LOGAN 4 230 1					158.7	190.5
	LELANDO-LOGAN 230 W/ B10T LIMITED TO 75 N					140.6	168.7
	66441 GARRISN4 230 67106 LELANDO4 230 1	SW107				132.4	158.9
	66791 CENTER 3 345 67316 COYOTE 3 345 1					130.1	156.1
	66442 GARRISN7 115 67113 VOLTAIR7 115 1					125.8	150.9
	66441 GARRISN4 230 66442 GARRISN7 115 1					122.9	147.5
	66442 GARRISN7 115 67308 BEULAH 7 115 1					120.4	144.5
	66441 GARRISN4 230 66444 JAMESTN4 230 1					118.8	142.6
	66426 BISMARK4 230 67283 WILTTAP4 230 1					118.1	141.7
	66441 GARRISN4 230 67283 WILTTAP4 230 1					118.1	141.7
	63369 JAMESTN3 345 66791 CENTER 3 345 1					117.2	140.6
	66426 BISMARK4 230 66456 WASHBRN4 230 1	SW106				117.0	140.4
	66456 WASHBRN4 230 67106 LELANDO4 230 1	SW106				117.0	140.4
	63358 BUFFALO3 345 63369 JAMESTN3 345 1					116.9	140.3
	63044 MCHENRY4 230 63056 BALTA 4 230 1	SW117				116.8	140.2
	63358 BUFFALO3 345 66792 MAPLE R3 345 1					116.8	140.2
60503 GI0503 7 115 66449 MAX 7 115 1	SYSTEM INTACT		120.0			14.2	17.0
	60139 MALLARD7 115 60503 GI0503 7 115 1					102.2	122.7
60139 MALLARD7 115 67155 LOGAN 7 115 1	SYSTEM INTACT		159.0	9.2	14.7	30.0	47.7
	67106 LELANDO4 230 67108 LOGAN 4 230 1			121.2	192.8	126.9	201.8
	LELANDO-LOGAN 230 W/ B10T LIMITED TO 75 N			74.5	118.5	82.3	130.8
60140 MCHENRY7 115 63082 MCHENRYY1.00 1	SYSTEM INTACT		84.0	80.9	68.0	71.0	59.6
	60138 SOURIS 7 115 60139 MALLARD7 115 1			106.2	89.2	101.9	85.6
	63044 MCHENRY4 230 63056 BALTA 4 230 1			96.8	81.3		
	63047 RAMSEY 4 230 63056 BALTA 4 230 1			98.4	82.7		
	63047 RAMSEY 4 230 63056 BALTA 4 230 1	SW116		96.9	81.4		
	63047 RAMSEY 4 230 66755 PRAIRIE4 230 1	SW116		96.9	81.4		
	63185 RUGBY Y 230 63279 RUGBOTP7 115 1			99.8	83.8		
	63185 RUGBY Y 230 63379 RUGBY 4 230 1			103.5	87.0		
	63279 RUGBOTP7 115 67264 RUGBCPC7 115 1			96.2	80.8		
	66442 GARRISN7 115 66449 MAX 7 115 1			91.2	76.6		
	66442 GARRISN7 115 67113 VOLTAIR7 115 1			108.2	90.9	96.0	80.6
	66452 RUGBY 7 115 67264 RUGBCPC7 115 1			92.3	77.6		
	66751 CENTER 4 230 67342 HESKETT4 230 1			90.8	76.2		
	67106 LELANDO4 230 67108 LOGAN 4 230 1			137.5	115.5	112.1	94.1
61601 CENTRDC4 230 66756 SQBUTTE4 230 1	SYSTEM INTACT		478.0	92.2	440.9	92.3	441.3
	63162 OAKES 941.6 63362 OAKES 4 230 1	SW115		92.6	442.8	92.7	443.1
	63193 FORMAN Y 230 63263 FORMN 7 115 1	SW115		92.6	442.8	92.7	443.1
	63193 FORMAN Y 230 63363 FORMAN 4 230 1	SW115		92.6	442.8	92.7	443.1
	63327 HANKSON4 230 63363 FORMAN 4 230 1	SW115		92.6	442.8	92.7	443.1
	63362 OAKES 4 230 63363 FORMAN 4 230 1			92.6	442.5	92.7	443.1
	63362 OAKES 4 230 63363 FORMAN 4 230 1	SW115		92.6	442.8	92.7	443.1
	63362 OAKES 4 230 67326 ELLENDL4 230 1			92.6	442.7	92.7	443.2
	63362 OAKES 4 230 67326 ELLENDL4 230 1	SW115		92.6	442.8	92.7	443.1
	63369 JAMESTN3 345 66791 CENTER 3 345 1			92.5	442.1		
	66426 BISMARK4 230 66456 WASHBRN4 230 1	SW106				92.6	442.6
	66751 CENTER 4 230 66756 SQBUTTE4 230 1			92.7	443.1	92.8	443.5
	66756 SQBUTTE4 230 66791 CENTER 3 345 1			92.8	443.7	92.9	444.1
	66791 CENTER 3 345 67316 COYOTE 3 345 1			93.5	446.7	93.7	447.7
	66791 CENTER 3 345 67316 COYOTE 3 345 1	SW227		92.8	443.6	92.9	444.3
	67101 ANTELOP3 345 67183 CHAR.CK3 345 1			92.5	442.2	92.6	442.8
	67326 ELLENDL4 230 67390 G132 230 1			93.0	444.5	93.1	444.9
62003 JOHNJCT7 115 63216 ORTONVL7 115 1	SYSTEM INTACT		96.6	75.0	72.5	75.0	72.4
	63129 WAHPETN941.6 63191 WAHPET1Y 230 1	SW132		100.1	96.7	100.3	96.9
	63129 WAHPETN941.6 63201 WAHPET2Y 230 1	SW133		109.3	105.6	109.1	105.4
	63191 WAHPET1Y 230 63229 WAHPETN7 115 1	SW132		100.1	96.7	100.3	96.9
	63191 WAHPET1Y 230 63329 WAHPETN4 230 1	SW132		100.1	96.7	100.3	96.9
	63201 WAHPET2Y 230 63229 WAHPETN7 115 1	SW133		109.3	105.6	109.1	105.4
	63201 WAHPET2Y 230 63329 WAHPETN4 230 1	SW133		109.3	105.6	109.1	105.4
	63314 BIGSTON4 230 63325 BROWNSV4 230 1			93.4	90.3	92.5	89.4
	63314 BIGSTON4 230 63325 BROWNSV4 230 1	SW120		93.6	90.4	92.7	89.5
	63325 BROWNSV4 230 63327 HANKSON4 230 1			94.0	90.8	93.1	90.0
	63325 BROWNSV4 230 63327 HANKSON4 230 1	SW120		93.6	90.4	92.7	89.5
	63327 HANKSON4 230 63329 WAHPETN4 230 1			108.1	104.5	108.0	104.3
	63327 HANKSON4 230 63329 WAHPETN4 230 1	SW133		109.3	105.6	109.1	105.4
	63329 WAHPETN4 230 63331 FERGSFL4 230 1	SW132		100.1	96.7	100.3	96.9
62003 JOHNJCT7 115 66555 MORRIS 7 115 1	SYSTEM INTACT		94.0	63.3	59.5	63.3	59.5

Appendix F.3: Thermal Results with B10T @ 165 MW S>N (Contd.)

CIRCUIT FROM: # NAME	CIRCUIT TO: # NAME	CKT	CONTINGENCY FROM TO CKT	SWITCH	RATEA MVA	WITHOUT GI-0503 %	WITHOUT GI-0503 MVA	WITH GI-0503 %	WITH GI-0503 MVA
			63129 WAHPETN941.6 63201 WAHPET2Y 230 1	SW133		98.5	92.6	98.3	92.4
			63201 WAHPET2Y 230 63229 WAHPETN7 115 1	SW133		98.5	92.6	98.3	92.4
			63201 WAHPET2Y 230 63329 WAHPETN4 230 1	SW133		98.5	92.6	98.3	92.4
			63327 HANKSON4 230 63329 WAHPETN4 230 1			97.4	91.5	97.2	91.4
			63327 HANKSON4 230 63329 WAHPETN4 230 1	SW133		98.5	92.6	98.3	92.4
63044 MCHENRY4 230	63082 MCHENRYY1.00	1	SYSTEM INTACT		84.0	91.6	77.0	83.9	70.4
			60138 SOURIS 7 115 60139 MALLARD7 115 1			115.6	97.1	112.2	94.2
			60139 MALLARD7 115 60503 GI0503 7 115 1					96.6	81.2
			60139 MALLARD7 115 66449 MAX 7 115 1			99.8	83.9		
			63044 MCHENRY4 230 63056 BALTA 4 230 1			103.9	87.2	93.9	78.9
			63047 RAMSEY 4 230 63056 BALTA 4 230 1			107.2	90.1	96.8	81.3
			63047 RAMSEY 4 230 63056 BALTA 4 230 1	SW116		105.9	88.9	95.7	80.4
			63047 RAMSEY 4 230 66755 PRAIRIE4 230 1			97.9	82.2		
			63047 RAMSEY 4 230 66755 PRAIRIE4 230 1	SW116		105.9	88.9	95.7	80.4
			63185 RUGBY Y 230 63279 RUGBOTP7 115 1			107.4	90.2	93.2	78.3
			63185 RUGBY Y 230 63379 RUGBY 4 230 1			111.8	93.9	97.5	81.9
			63279 RUGBOTP7 115 67264 RUGBCPC7 115 1			104.6	87.9		
			66442 GARRISN7 115 66449 MAX 7 115 1			101.0	84.9		
			66442 GARRISN7 115 67113 VOLTAIR7 115 1			115.4	97.0	104.8	88.1
			66452 RUGBY 7 115 67264 RUGBCPC7 115 1			101.1	85.0		
			66751 CENTER 4 230 67342 HESKETT4 230 1			99.7	83.8		
			67106 LELANDO4 230 67108 LOGAN 4 230 1			144.7	121.6	120.6	101.3
63179 RUGBY T13.8	63185 RUGBY Y 230	1	SYSTEM INTACT		25.3	98.5	24.9	98.2	24.8
			60141 NORDIC 7 115 66712 PRAIRIE7 115 1	SW101		98.8	25.0	98.4	24.9
			60141 NORDIC 7 115 66712 PRAIRIE7 115 2	SW101		98.8	25.0	98.4	24.9
			63042 COAL TP4 230 63044 MCHENRY4 230 1			98.8	25.0	98.4	24.9
			63042 COAL TP4 230 63044 MCHENRY4 230 1	SW110		98.8	25.0	98.4	24.9
			63042 COAL TP4 230 63049 STANTON4 230 1	SW110		98.8	25.0	98.4	24.9
			63047 RAMSEY 4 230 66755 PRAIRIE4 230 1			98.9	25.0	98.6	24.9
			63056 BALTA 4 230 63290 HARVEY 4 230 1					98.8	25.0
			63056 BALTA 4 230 63379 RUGBY 4 230 1	SW607		99.3	25.1	98.9	25.0
			63186 WILTON Y 230 63245 WILTON 7 115 1	SW948		98.8	25.0	98.4	24.9
			63245 WILTON 7 115 63246 BEMIDJI7 115 1			98.7	25.0		
			63257 HENSEL 7 115 66705 DRAYTON7 115 1			98.7	25.0		
			63265 DEVILSE7 115 63267 DEVIL J7 115 1			98.7	25.0		
			63290 HARVEY 4 230 63381 UNDERWD4 230 1					98.8	25.0
			66317 LEEDS 869.0 66447 LEEDS 7 115 1			98.7	25.0		
			66437 GRNDFKS4 230 66759 PICKERT4 230 1					98.6	24.9
			66437 GRNDFKS4 230 66759 PICKERT4 230 1	SW113				98.6	24.9
			66442 GARRISN7 115 67113 VOLTAIR7 115 1			98.7	25.0		
			66444 JAMESTN4 230 66759 PICKERT4 230 1					98.5	24.9
			66444 JAMESTN4 230 66759 PICKERT4 230 1	SW113				98.6	24.9
			66755 PRAIRIE4 230 66758 WINGER 4 230 1			98.7	25.0		
			66791 CENTER 3 345 67316 COYOTE 3 345 1	SW227		98.8	25.0	98.5	24.9
63184 HENSEL2Y 115	66796 HENSELU869.0	P2	SYSTEM INTACT		40.0	45.7	18.3	45.8	18.3
			63192 HENSEL Y 115 63257 HENSEL 7 115 1			98.6	39.5	98.8	39.5
			63192 HENSEL Y 115 66796 HENSELU869.0 1			92.0	36.8	92.1	36.9
63185 RUGBY Y 230	63279 RUGBOTP7 115	1	SYSTEM INTACT		125.0	58.9	73.6		
			63047 RAMSEY 4 230 63056 BALTA 4 230 1			94.0	117.5		
63185 RUGBY Y 230	63379 RUGBY 4 230	1	SYSTEM INTACT		125.0	53.2	66.5		
			63047 RAMSEY 4 230 63056 BALTA 4 230 1			90.4	113.0		
63187 WINGER Y 230	63238 WINGER 7 115	1	SYSTEM INTACT		140.0			55.1	77.1
			63186 WILTON Y 230 63245 WILTON 7 115 1	SW809				90.4	126.6
			63345 WILTON 4 230 66758 WINGER 4 230 1					90.4	126.6
63187 WINGER Y 230	66758 WINGER 4 230	1	SYSTEM INTACT		140.0			55.1	77.1
			63186 WILTON Y 230 63245 WILTON 7 115 1	SW809				90.4	126.6
			63345 WILTON 4 230 66758 WINGER 4 230 1					90.4	126.6
63189 MAPLER1Y 345	66754 MAPLE R4 230	1	SYSTEM INTACT		336.0	55.5	186.4	57.2	192.2
			63190 MAPLER2Y 345 66754 MAPLE R4 230 1			106.6	358.2	109.9	369.4
			63190 MAPLER2Y 345 66792 MAPLE R3 345 1			106.6	358.3	110.0	369.5
63189 MAPLER1Y 345	66792 MAPLE R3 345	1	SYSTEM INTACT		336.0	57.0	191.5	58.8	197.5
			63190 MAPLER2Y 345 66754 MAPLE R4 230 1			109.5	367.9	112.9	379.4
			63190 MAPLER2Y 345 66792 MAPLE R3 345 1			109.5	368.0	112.9	379.5
63190 MAPLER2Y 345	66754 MAPLE R4 230	1	SYSTEM INTACT		336.0	55.5	186.4	57.2	192.2
			63189 MAPLER1Y 345 66754 MAPLE R4 230 1			106.6	358.2	109.9	369.4
			63189 MAPLER1Y 345 66792 MAPLE R3 345 1			106.6	358.3	110.0	369.5
63190 MAPLER2Y 345	66792 MAPLE R3 345	1	SYSTEM INTACT		336.0	57.0	191.5	58.8	197.5
			63189 MAPLER1Y 345 66754 MAPLE R4 230 1			109.5	367.9	112.9	379.4
			63189 MAPLER1Y 345 66792 MAPLE R3 345 1			109.5	368.0	112.9	379.5
63192 HENSEL Y 115	66796 HENSELU869.0	1	SYSTEM INTACT		40.0	45.7	18.3	45.8	18.3
			63184 HENSEL2Y 115 63257 HENSEL 7 115 P2			98.6	39.5	98.8	39.5

Appendix F.3: Thermal Results with B10T @ 165 MW S>N (Contd.)

CIRCUIT FROM: CIRCUIT TO: CKT	CONTINGENCY		RATEA	WITHOUT GI-0503		WITH GI-0503	
# NAME # NAME	FROM TO CKT	SWITCH	MVA	%	MVA	%	MVA
	63184 HENSEL2Y 115 66796 HENSELU869.0 P2			92.0	36.8	92.1	36.9
63193 FORMAN Y 230 63263 FORMN 7 115 1	SYSTEM INTACT		112.0	41.2	46.2	40.7	45.6
	63129 WAHPETN941.6 63201 WAHPET2Y 230 1	SW133		94.8	106.2	94.5	105.9
	63201 WAHPET2Y 230 63229 WAHPETN7 115 1	SW133		94.8	106.2	94.5	105.9
	63201 WAHPET2Y 230 63329 WAHPETN4 230 1	SW133		94.8	106.2	94.5	105.9
	63327 HANKSON4 230 63329 WAHPETN4 230 1			92.3	103.4	92.0	103.1
	63327 HANKSON4 230 63329 WAHPETN4 230 1	SW133		94.8	106.2	94.5	105.9
	63327 HANKSON4 230 63363 FORMAN 4 230 1			114.9	128.7	116.7	130.7
63193 FORMAN Y 230 63363 FORMAN 4 230 1	SYSTEM INTACT		140.0	35.9	50.2	35.6	49.8
	63327 HANKSON4 230 63363 FORMAN 4 230 1			94.7	132.6	96.2	134.7
63195 BIGSTONY 230 63214 BIGSTON7 115 1	SYSTEM INTACT		233.0	75.4	175.6	75.8	176.6
	63129 WAHPETN941.6 63191 WAHPET1Y 230 1	SW132		90.2	210.1	90.7	211.4
	63129 WAHPETN941.6 63201 WAHPET2Y 230 1	SW133		96.4	224.5	96.8	225.5
	63191 WAHPET1Y 230 63229 WAHPETN7 115 1	SW132		90.2	210.1	90.7	211.4
	63191 WAHPET1Y 230 63329 WAHPETN4 230 1	SW132		90.2	210.1	90.7	211.4
	63201 WAHPET2Y 230 63229 WAHPETN7 115 1	SW133		96.4	224.5	96.8	225.5
	63201 WAHPET2Y 230 63329 WAHPETN4 230 1	SW133		96.4	224.5	96.8	225.5
	63327 HANKSON4 230 63329 WAHPETN4 230 1			95.5	222.6	95.9	223.5
	63327 HANKSON4 230 63329 WAHPETN4 230 1	SW133		96.4	224.5	96.8	225.5
	63329 WAHPETN4 230 63331 FERGSFL4 230 1	SW132		90.2	210.1	90.7	211.4
63195 BIGSTONY 230 63314 BIGSTON4 230 1	SYSTEM INTACT		233.0	75.4	175.6	75.8	176.6
	63129 WAHPETN941.6 63191 WAHPET1Y 230 1	SW132		90.2	210.1	90.7	211.4
	63129 WAHPETN941.6 63201 WAHPET2Y 230 1	SW133		96.4	224.5	96.8	225.4
	63191 WAHPET1Y 230 63229 WAHPETN7 115 1	SW132		90.2	210.1	90.7	211.4
	63191 WAHPET1Y 230 63329 WAHPETN4 230 1	SW132		90.2	210.1	90.7	211.4
	63201 WAHPET2Y 230 63229 WAHPETN7 115 1	SW133		96.4	224.5	96.8	225.4
	63201 WAHPET2Y 230 63329 WAHPETN4 230 1	SW133		96.4	224.5	96.8	225.4
	63327 HANKSON4 230 63329 WAHPETN4 230 1			95.5	222.6	95.9	223.5
	63327 HANKSON4 230 63329 WAHPETN4 230 1	SW133		96.4	224.5	96.8	225.4
	63329 WAHPETN4 230 63331 FERGSFL4 230 1	SW132		90.2	210.1	90.7	211.4
63219 GRANTCO7 115 66555 MORRIS 7 115 1	SYSTEM INTACT		96.0			48.3	46.4
	63129 WAHPETN941.6 63191 WAHPET1Y 230 1	SW132				90.6	87.0
	63191 WAHPET1Y 230 63229 WAHPETN7 115 1	SW132				90.6	87.0
	63191 WAHPET1Y 230 63329 WAHPETN4 230 1	SW132				90.6	87.0
	63329 WAHPETN4 230 63331 FERGSFL4 230 1	SW132				90.6	87.0
63245 WILTON 7 115 63246 BEMIDJI7 115 1	SYSTEM INTACT		120.0			75.8	91.0
	60133 SHEYNNE4 230 60134 SHEYNNE7 115 5	SW887				93.0	111.7
	60133 SHEYNNE4 230 63336 AUDUBON4 230 1					92.4	110.9
63281 WILT TAP 115 63285 SOLWAY 7 115 1	SYSTEM INTACT		96.6			38.4	37.1
	63186 WILTON Y 230 63245 WILTON 7 115 1	SW809				90.7	87.6
	63345 WILTON 4 230 66758 WINGER 4 230 1					90.7	87.6
63327 HANKSON4 230 63329 WAHPETN4 230 1	SYSTEM INTACT		320.0	88.7	283.7	88.7	283.8
	63189 MAPLER1Y 345 66754 MAPLE R4 230 1	SW114		110.3	352.9	110.8	354.5
	63189 MAPLER1Y 345 66792 MAPLE R3 345 1	SW114		110.3	352.9	110.8	354.5
	63190 MAPLER2Y 345 66754 MAPLE R4 230 1	SW114		110.3	352.9	110.8	354.5
	63190 MAPLER2Y 345 66792 MAPLE R3 345 1	SW114		110.3	352.9	110.8	354.5
	63195 BIGSTONY 230 63214 BIGSTON7 115 1			101.9	326.0	102.0	326.5
	63195 BIGSTONY 230 63314 BIGSTON4 230 1			101.9	326.0	102.0	326.5
	63198 BUFFALOY 345 63258 BUFFALO7 115 1	SW114		110.3	352.9	110.8	354.5
	63198 BUFFALOY 345 63358 BUFFALO3 345 1	SW114		110.3	352.9	110.8	354.5
	63214 BIGSTON7 115 63215 HIWY12 7 115 1	SW129		96.7	309.3	96.7	309.5
	63215 HIWY12 7 115 63216 ORTONVL7 115 1	SW129		96.7	309.3	96.7	309.5
	63358 BUFFALO3 345 63369 JAMESTN3 345 1			110.8	354.6	111.7	357.5
	63358 BUFFALO3 345 63369 JAMESTN3 345 1	SW114		110.3	352.9	110.8	354.5
	63358 BUFFALO3 345 66792 MAPLE R3 345 1			110.2	352.6	111.1	355.5
	63358 BUFFALO3 345 66792 MAPLE R3 345 1	SW114		110.3	352.9	110.8	354.5
	63369 JAMESTN3 345 66791 CENTER 3 345 1			111.1	355.6	111.9	358.2
63362 OAKES 4 230 63363 FORMAN 4 230 1	SYSTEM INTACT		320.0			77.5	248.0
	63189 MAPLER1Y 345 66754 MAPLE R4 230 1	SW114				91.5	292.8
	63189 MAPLER1Y 345 66792 MAPLE R3 345 1	SW114				91.5	292.8
	63190 MAPLER2Y 345 66754 MAPLE R4 230 1	SW114				91.5	292.8
	63190 MAPLER2Y 345 66792 MAPLE R3 345 1	SW114				91.5	292.8
	63198 BUFFALOY 345 63258 BUFFALO7 115 1	SW114				91.5	292.8
	63198 BUFFALOY 345 63358 BUFFALO3 345 1	SW114				91.5	292.8
	63358 BUFFALO3 345 63369 JAMESTN3 345 1					92.0	294.3
	63358 BUFFALO3 345 63369 JAMESTN3 345 1	SW114				91.5	292.8
	63358 BUFFALO3 345 66792 MAPLE R3 345 1					91.6	293.1
	63358 BUFFALO3 345 66792 MAPLE R3 345 1	SW114				91.5	292.8
	63369 JAMESTN3 345 66791 CENTER 3 345 1					90.6	289.9
63362 OAKES 4 230 67326 ELLENDL4 230 1	SYSTEM INTACT		240.0	102.1	244.9	104.1	249.9
	63189 MAPLER1Y 345 66754 MAPLE R4 230 1	SW114		118.3	283.8	120.6	289.5

Appendix F.3: Thermal Results with B10T @ 165 MW S>N (Contd.)

CIRCUIT FROM: # NAME	CIRCUIT TO: # NAME	CKT	CONTINGENCY FROM TO CKT	SWITCH	RATEA MVA	WITHOUT GI-0503 %	WITHOUT GI-0503 MVA	WITH GI-0503 %	WITH GI-0503 MVA
			63189 MAPLER1Y 345 66792 MAPLE R3 345 1	SW114		118.3	283.8	120.6	289.5
			63190 MAPLER2Y 345 66754 MAPLE R4 230 1	SW114		118.3	283.8	120.6	289.5
			63190 MAPLER2Y 345 66792 MAPLE R3 345 1	SW114		118.3	283.8	120.6	289.5
			63198 BUFFALOY 345 63258 BUFFALO7 115 1	SW114		118.3	283.8	120.6	289.5
			63198 BUFFALOY 345 63358 BUFFALO3 345 1	SW114		118.3	283.8	120.6	289.5
			63314 BIGSTON4 230 63325 BROWNSV4 230 1	SW120		111.5	267.6	113.2	271.7
			63325 BROWNSV4 230 63327 HANKSON4 230 1			111.5	267.6	113.2	271.7
			63325 BROWNSV4 230 63327 HANKSON4 230 1	SW120		111.5	267.6	113.2	271.7
			63358 BUFFALO3 345 63369 JAMESTN3 345 1			118.4	284.1	121.2	290.9
			63358 BUFFALO3 345 63369 JAMESTN3 345 1	SW114		118.3	283.8	120.6	289.5
			63358 BUFFALO3 345 66792 MAPLE R3 345 1			117.9	283.1	120.8	290.0
			63358 BUFFALO3 345 66792 MAPLE R3 345 1	SW114		118.3	283.8	120.6	289.5
			63369 JAMESTN3 345 66791 CENTER 3 345 1			120.9	290.1	123.7	296.9
			67326 ELLENDL4 230 67327 ELLENDL7 115 1			112.4	269.7	114.9	275.7
66203 FARGO 869.0	66436 FARGO 7	115 1	SYSTEM INTACT		42.0	25.5	10.7	25.5	10.7
			66203 FARGO 869.0 66436 FARGO 7 115 2			108.5	45.6	109.0	45.8
66203 FARGO 869.0	66436 FARGO 7	115 2	SYSTEM INTACT		100.0	53.1	53.1	53.3	53.3
			60136 MAPLE R7 115 66783 MAPLE RT 115 1			97.9	97.9	97.9	97.9
			66783 MAPLE RT 115 67000 MAPLE R869.0 1			97.9	97.9	97.9	97.9
66404 DAWSONC7	67356 LEWIS 7	115 1	SYSTEM INTACT		80.0	28.9	23.1	30.9	24.7
			66403 DAWSONC4 230 66413 MEDORA 4 230 1			98.1	78.5	100.6	80.5
			66413 MEDORA 4 230 66425 BELFELD4 230 1			106.4	85.1	109.1	87.3
66405 FTPECK 4	66406 FTPECK 7	115 1	SYSTEM INTACT		67.0	17.1	11.5	15.8	10.6
			66403 DAWSONC4 230 66405 FTPECK 4 230 1			138.1	92.5	138.1	92.5
66408 WATFORD7	67182 CHAR.CK7	115 1	SYSTEM INTACT		120.0	61.8	74.2	60.4	72.5
			67104 TIOGA4 4 230 67108 LOGAN 4 230 1			102.5	123.0	102.7	123.3
66417 DICKNSN4	66418 DKSN-ND7	115 1	SYSTEM INTACT		100.0	70.5	70.6	71.0	71.0
			66403 DAWSONC4 230 66413 MEDORA 4 230 1			107.8	107.8	108.5	108.5
			66413 MEDORA 4 230 66425 BELFELD4 230 1			111.9	111.9	112.6	112.6
			66418 DKSN-ND7 115 67320 DICKSWH7 115 1			111.5	111.6	113.8	113.8
			67265 LTLMISS4 230 67304 BAKER 4 230 1					90.8	90.8
			67318 COYOTE 7 115 67320 DICKSWH7 115 1			117.6	117.6	119.7	119.7
66418 DKSN-ND7	67320 DICKSWH7	115 1	SYSTEM INTACT		101.4	50.0	50.7	52.5	53.3
			66417 DICKNSN4 230 66418 DKSN-ND7 115 1			93.7	95.0	96.6	97.9
			66417 DICKNSN4 230 66418 DKSN-ND7 115 1	SW302		93.7	95.0	96.6	97.9
			66791 CENTER 3 345 67316 COYOTE 3 345 1			125.4	127.2	130.1	131.9
66418 DKSN-ND7	67370 N ENGLN7	115 1	SYSTEM INTACT		112.5	61.7	69.4	63.8	71.7
			66403 DAWSONC4 230 66413 MEDORA 4 230 1			90.4	101.6	92.7	104.3
			66413 MEDORA 4 230 66425 BELFELD4 230 1			93.7	105.4	96.0	108.0
66421 WILISTN7	67386 TIOGA7 7	115 1	SYSTEM INTACT		79.7	18.1	14.4	12.0	9.6
			67104 TIOGA4 4 230 67108 LOGAN 4 230 1			156.4	124.6	157.4	125.4
			67106 LELANDO4 230 67108 LOGAN 4 230 1			90.5	72.1		
66426 BISMARK4	67296 WARD 4	230 1	SYSTEM INTACT		320.0	40.0	127.9	40.1	128.2
			66426 BISMARK4 230 66456 WASHBRN4 230 1	SW106		90.1	288.3	92.9	297.3
			66456 WASHBRN4 230 67106 LELANDO4 230 1	SW106		90.1	288.3	92.9	297.3
66432 EDGELEY7	66433 EDGELEY869.0	1	SYSTEM INTACT		20.0			44.4	8.9
			63362 OAKES 4 230 63363 FORMAN 4 230 1					91.1	18.2
			63362 OAKES 4 230 67326 ELLENDL4 230 1					91.0	18.2
66441 GARRISN4	66442 GARRISN7	115 1	SYSTEM INTACT		133.0			38.7	51.5
			60139 MALLARD7 115 60503 GI0503 7 115 1					90.1	119.9
			66791 CENTER 3 345 67316 COYOTE 3 345 1					103.2	137.3
66442 GARRISN7	66449 MAX 7	115 1	SYSTEM INTACT		120.0	65.2	78.2	19.4	23.3
			60139 MALLARD7 115 60503 GI0503 7 115 1					97.8	117.3
			67106 LELANDO4 230 67108 LOGAN 4 230 1			118.1	141.7		
66442 GARRISN7	67308 BEULAH 7	115 1	SYSTEM INTACT		120.0			51.3	61.6
			66441 GARRISN4 230 67106 LELANDO4 230 1	SW107				91.7	110.0
66756 SQBUTTE4	66791 CENTER 3	345 1	SYSTEM INTACT		336.0	24.9	83.7	24.8	83.3
			66791 CENTER 3 345 67316 COYOTE 3 345 1			98.1	329.5	100.8	338.8
			66791 CENTER 3 345 67316 COYOTE 3 345 1	SW227				92.3	310.1
67104 TIOGA4 4	67108 LOGAN 4	230 1	SYSTEM INTACT		240.0	77.2	185.4	78.1	187.5
			67101 ANTELOP3 345 67183 CHAR.CK3 345 1			92.5	221.9	93.3	224.0
			67155 LOGAN 7 115 67261 BTHOLD 7 115 1			91.8	220.3	93.6	224.6
			67261 BTHOLD 7 115 67352 KENMARE7 115 1			91.0	218.3	93.2	223.6
67104 TIOGA4 4	67385 TIOGA4 7	115 1	SYSTEM INTACT		100.0	12.2	12.2	14.7	14.7
			67104 TIOGA4 4 230 67108 LOGAN 4 230 1			181.0	181.0	185.8	185.8
67105 LELANDO3	67201 LELND1TY	345 1	SYSTEM INTACT		250.0	37.2	92.9		
			67105 LELANDO3 345 67202 LELND2TY 345 1	SW28		94.0	235.1		
			67106 LELANDO4 230 67202 LELND2TY 345 1	SW28		94.0	235.1		
67106 LELANDO4	67201 LELND1TY	345 1	SYSTEM INTACT		250.0	36.2	90.6		
			67105 LELANDO3 345 67202 LELND2TY 345 1	SW28		91.7	229.2		
			67106 LELANDO4 230 67202 LELND2TY 345 1	SW28		91.7	229.2		

Appendix F.3: Thermal Results with B10T @ 165 MW S>N (Contd.)

CIRCUIT FROM: CIRCUIT TO: CKT	CONTINGENCY		RATEA	WITHOUT GI-0503		WITH GI-0503	
# NAME # NAME	FROM TO CKT	SWITCH	MVA	%	MVA	%	MVA
67155 LOGAN 7 115 67261 BTHOLD 7 115 1	SYSTEM INTACT		80.0	58.0	46.4	61.7	49.4
	67104 TIOGA4 4 230 67108 LOGAN 4 230 1			175.5	140.4	182.9	146.3
67261 BTHOLD 7 115 67352 KENMARE7 115 1	SYSTEM INTACT		80.0	56.2	45.0	60.0	48.0
	67104 TIOGA4 4 230 67108 LOGAN 4 230 1			174.1	139.3	181.5	145.2
67296 WARD 4 230 67342 HESKETT4 230 1	SYSTEM INTACT		320.0	42.5	136.0	42.6	136.3
	66426 BISMARK4 230 66456 WASHBRN4 230 1	SW106		92.6	296.3	95.4	305.4
	66456 WASHBRN4 230 67106 LELANDO4 230 1	SW106		92.6	296.3	95.4	305.4
67306 BISM DT7 115 67309 BISEXP 7 115 1	SYSTEM INTACT		67.8	42.4	28.7	42.1	28.5
	67306 BISM DT7 115 67365 MANDANS7 115 1			98.1	66.5	98.4	66.7
	67343 HESKETT7 115 67367 MANDANW7 115 1			124.4	84.3	124.7	84.5
	67365 MANDANS7 115 67367 MANDANW7 115 1			124.5	84.4	124.8	84.6
67307 BISM NW7 115 67343 HESKETT7 115 1	SYSTEM INTACT		119.5	52.2	62.3	53.0	63.4
	66427 BISMARK7 115 67329 ESTBMRK7 115 1			90.2	107.8	90.5	108.1
67308 BEULAH 7 115 67318 COYOTE 7 115 1	SYSTEM INTACT		101.4	10.8	11.0	4.6	4.7
	66791 CENTER 3 345 67316 COYOTE 3 345 1			285.7	289.8	282.4	286.4
67308 BEULAH 7 115 67343 HESKETT7 115 1	SYSTEM INTACT		88.0	24.7	21.8	28.2	24.9
	66791 CENTER 3 345 67316 COYOTE 3 345 1			113.7	100.0	119.8	105.5
67309 BISEXP 7 115 67329 ESTBMRK7 115 1	SYSTEM INTACT		67.8	61.5	41.7	61.2	41.5
	67306 BISM DT7 115 67365 MANDANS7 115 1			118.4	80.3	118.7	80.5
	67343 HESKETT7 115 67367 MANDANW7 115 1			144.7	98.1	145.1	98.4
	67365 MANDANS7 115 67367 MANDANW7 115 1			144.9	98.2	145.2	98.5
67316 COYOTE 3 345 67318 COYOTE 7 115 1	SYSTEM INTACT		168.0	41.7	70.1	36.5	61.3
	63189 MAPLER1Y 345 66754 MAPLE R4 230 1	SW114		96.3	161.8	92.4	155.3
	63189 MAPLER1Y 345 66792 MAPLE R3 345 1	SW114		96.3	161.8	92.4	155.3
	63190 MAPLER2Y 345 66754 MAPLE R4 230 1	SW114		96.3	161.8	92.4	155.3
	63190 MAPLER2Y 345 66792 MAPLE R3 345 1	SW114		96.3	161.8	92.4	155.3
	63198 BUFFALOY 345 63258 BUFFALO7 115 1	SW114		96.3	161.8	92.4	155.3
	63198 BUFFALOY 345 63358 BUFFALO3 345 1	SW114		96.3	161.8	92.4	155.3
	63358 BUFFALO3 345 63369 JAMESTN3 345 1			96.2	161.7	92.5	155.3
	63358 BUFFALO3 345 63369 JAMESTN3 345 1	SW114		96.3	161.8	92.4	155.3
	63358 BUFFALO3 345 66792 MAPLE R3 345 1			94.6	158.9	90.8	152.6
	63358 BUFFALO3 345 66792 MAPLE R3 345 1	SW114		96.3	161.8	92.4	155.3
	63369 JAMESTN3 345 66791 CENTER 3 345 1			100.7	169.2	96.9	162.9
	66791 CENTER 3 345 67316 COYOTE 3 345 1			257.2	432.2	257.8	433.1
67318 COYOTE 7 115 67320 DICKSWH7 115 1	SYSTEM INTACT		101.4	56.7	57.5	59.2	60.0
	66417 DICKNSN4 230 66418 DKSN-ND7 115 1			100.6	102.1	103.6	105.1
	66417 DICKNSN4 230 66418 DKSN-ND7 115 1	SW302		100.6	102.1	103.6	105.1
	66791 CENTER 3 345 67316 COYOTE 3 345 1			131.9	133.8	136.5	138.5
	67101 ANTELOP3 345 67183 CHAR.CK3 345 1					91.0	92.3
67326 ELLENDL4 230 67327 ELLENDL7 115 1	SYSTEM INTACT		100.0	64.0	64.0	64.3	64.3
	63162 OAKES 941.6 63362 OAKES 4 230 1	SW115		136.4	136.4	139.7	139.7
	63193 FORMAN Y 230 63263 FORMN 7 115 1	SW115		136.4	136.4	139.7	139.7
	63193 FORMAN Y 230 63363 FORMAN 4 230 1	SW115		136.4	136.4	139.7	139.7
	63327 HANKSON4 230 63363 FORMAN 4 230 1			93.1	93.1	95.5	95.5
	63327 HANKSON4 230 63363 FORMAN 4 230 1	SW115		136.4	136.4	139.7	139.7
	63362 OAKES 4 230 63363 FORMAN 4 230 1			134.3	134.3	137.8	137.8
	63362 OAKES 4 230 63363 FORMAN 4 230 1	SW115		136.4	136.4	139.7	139.7
	63362 OAKES 4 230 67326 ELLENDL4 230 1			136.5	136.5	136.5	136.5
	63362 OAKES 4 230 67326 ELLENDL4 230 1	SW115		136.4	136.4	139.7	139.7
67326 ELLENDL4 230 67390 G132 230 1	SYSTEM INTACT		239.0	122.4	292.5	125.1	299.1
	63189 MAPLER1Y 345 66754 MAPLE R4 230 1	SW114		138.4	330.8	141.4	337.9
	63189 MAPLER1Y 345 66792 MAPLE R3 345 1	SW114		138.4	330.8	141.4	337.9
	63190 MAPLER2Y 345 66754 MAPLE R4 230 1	SW114		138.4	330.8	141.4	337.9
	63190 MAPLER2Y 345 66792 MAPLE R3 345 1	SW114		138.4	330.8	141.4	337.9
	63198 BUFFALOY 345 63258 BUFFALO7 115 1	SW114		138.4	330.8	141.4	337.9
	63198 BUFFALOY 345 63358 BUFFALO3 345 1	SW114		138.4	330.8	141.4	337.9
	63314 BIGSTON4 230 63325 BROWNSV4 230 1	SW120		128.6	307.3	131.2	313.7
	63325 BROWNSV4 230 63327 HANKSON4 230 1	SW120		128.6	307.3	131.2	313.7
	63358 BUFFALO3 345 63369 JAMESTN3 345 1			138.3	330.5	141.9	339.1
	63358 BUFFALO3 345 63369 JAMESTN3 345 1	SW114		138.4	330.8	141.4	337.9
	63358 BUFFALO3 345 66792 MAPLE R3 345 1			138.0	329.7	141.6	338.4
	63358 BUFFALO3 345 66792 MAPLE R3 345 1	SW114		138.4	330.8	141.4	337.9
	63369 JAMESTN3 345 66791 CENTER 3 345 1			140.0	334.7	143.6	343.3
	67342 HESKETT4 230 67394 WISHEK 4 230 1			131.7	314.9	131.7	314.9
	67390 G132 230 67394 WISHEK 4 230 1			134.2	320.7	134.2	320.8
67327 ELLENDL7 115 90247 G248 SUB34.5 1	SYSTEM INTACT		22.0	95.8	21.1	95.8	21.1
	62531 INMAN 7 115 63052 INMAN 4 230 1	SW141		96.3	21.2	96.2	21.2
	63051 HENNING4 230 63052 INMAN 4 230 1			96.3	21.2	96.2	21.2
	63051 HENNING4 230 63052 INMAN 4 230 1	SW140		96.3	21.2	96.2	21.2
	63051 HENNING4 230 63366 SILVRLK4 230 1			96.3	21.2	96.2	21.2
	63129 WAHPETN941.6 63201 WAHPET2Y 230 1	SW133		97.4	21.4	97.4	21.4

Appendix F.3: Thermal Results with B10T @ 165 MW S>N (Contd.)

CIRCUIT FROM: # NAME	CIRCUIT TO: # NAME	CKT	CONTINGENCY FROM TO CKT	SWITCH	RATEA MVA	WITHOUT GI-0503 %	WITHOUT GI-0503 MVA	WITH GI-0503 %	WITH GI-0503 MVA
			63201 WAHPET2Y 230 63229 WAHPETN7 115 1	SW133		97.4	21.4	97.4	21.4
			63201 WAHPET2Y 230 63329 WAHPETN4 230 1	SW133		97.4	21.4	97.4	21.4
			63262 GWINNER7 115 63263 FORMN 7 115 1			96.3	21.2	96.2	21.2
			63327 HANKSON4 230 63329 WAHPETN4 230 1			97.4	21.4	97.4	21.4
			63327 HANKSON4 230 63329 WAHPETN4 230 1	SW133		97.4	21.4	97.4	21.4
			63329 WAHPETN4 230 63331 FERGSFL4 230 1					96.1	21.1
			63331 FERGSFL4 230 63366 SILVRLK4 230 1			96.3	21.2	96.2	21.2
			63362 OAKES 4 230 67326 ELLENDL4 230 1					96.5	21.2
			63369 JAMESTN3 345 66791 CENTER 3 345 1			96.3	21.2		
			66426 BISMARK4 230 66456 WASHBRN4 230 1	SW106		96.2	21.2		
			66456 WASHBRN4 230 67106 LELANDO4 230 1	SW106		96.2	21.2		
			66751 CENTER 4 230 67342 HESKETT4 230 1					96.1	21.1
			66791 CENTER 3 345 67316 COYOTE 3 345 1	SW227		96.4	21.2	96.2	21.2
67342 HESKETT4 230	67343 HESKETT7 115	1	SYSTEM INTACT		100.0	28.2	28.2	27.4	27.4
			66427 BISMARK7 115 67329 ESTBMRK7 115 1			93.7	93.7	92.6	92.6
67342 HESKETT4 230	67394 WISHEK 4 230	1	SYSTEM INTACT		239.0	12.0	28.6	10.6	25.4
			67326 ELLENDL4 230 67390 G132 230 1			129.6	309.8	129.7	310.0
67347 HETINGR4 230	67348 HETINGR7 115	1	SYSTEM INTACT		100.0	62.8	62.8	65.1	65.1
			66403 DAWSONC4 230 66413 MEDORA 4 230 1			94.2	94.2	96.3	96.3
			66413 MEDORA 4 230 66425 BELFELD4 230 1			97.5	97.5	99.8	99.8
67348 HETINGR7 115	67370 N ENGLN7 115	1	SYSTEM INTACT		112.5			59.5	66.9
			66413 MEDORA 4 230 66425 BELFELD4 230 1					91.3	102.7
67352 KENMARE7 115	67380 STANLEY7 115	1	SYSTEM INTACT		61.6	47.8	29.4	52.7	32.4
			67104 TIOGA4 4 230 67108 LOGAN 4 230 1			194.9	120.1	203.7	125.5
67380 STANLEY7 115	67385 TIOGA4 7 115	1	SYSTEM INTACT		61.6	30.0	18.5	34.8	21.4
			67104 TIOGA4 4 230 67108 LOGAN 4 230 1			169.9	104.7	178.5	110.0
67390 G132 230	67394 WISHEK 4 230	1	SYSTEM INTACT		239.0	12.0	28.7	9.5	22.6
			67326 ELLENDL4 230 67390 G132 230 1			131.7	314.8	131.7	314.9