GENERATION INTERCONNECTION STUDY
Project # GI-0108 – Queue 37110-01

Final Report

SUBMITTED TO:
Western Area Power Administration

March 18, 2004

ESC Report No. 2004-10740-2.R06

940 Main Campus Drive, Suite 300
Raleigh, N C 27606
Telephone: (919) 856-2463
Fax: (919) 807-5060

ABB Inc. **Technical Report**

WESTERN AREA POWER ADMN. (WAPA)	ESC Report No. 2004-10740-2.R06		
Title: Generation Interconnection Study-Project # GI-0108	Dept	Date	Pages
	ESC	March 18, 2004	44

Author(s):
Albert Leirbukt
Seshadri Subramanian
Srinivas Pillutla

Reviewed by:
F.S Prabhakara
Rodolfo Koessler

Approved by:

Executive Summary

The main objective of this study is to assess the impact of interconnecting 200 MW of wind-based generation (GI-0108) at the White 345 kV substation. This System Impact Study (SIS) included system performance evaluation based on steady state analysis, transfer capability analysis, stability analysis and short-circuit analysis.

The following is a summary of study findings:

Steady-State Analysis:
The interconnection of this wind farm and modeled delivery from the wind farm to the Twin Cities, MN area resulted in a number of thermal overloads in the electrical system. These overloads were grouped into three categories. The first category consisted of all new overloads. The second category consisted of all pre-existing overloads that increased loading by ten percent or more and the third category consisted of all pre-existing overloads that increased loading by less than ten percent. Further distinction was drawn between overloads related to the generation interconnection and the delivery of power from this generator. This study has focused on the overloads caused by the generation interconnection only. These overloads are generally localized in the vicinity of the point of interconnection. The study shows that there would be no new thermal overloads associated with the interconnection of this wind farm. Table 3.8 lists other thermal overloads that could potentially become system limiters for the delivery of power from this generator.

N-2 contingency analysis was performed determine whether there are any new transmission system thermal overloads following simultaneous outages of any two transmission system branches in the vicinity of the proposed project. Results of the N-2 contingency analysis indicate that there are several new overloads attributable to the proposed project. Based on information provided by Western, operating restrictions for the new generating unit will be needed during prior outage conditions to maintain acceptable area facility loadings and voltages. These operating restrictions will be identified during the operating studies, if the transmission customer proceeds with the interconnection request.

Transfer Capability Analysis:
The impact of this project on First Contingency Incremental Transfer Capabilities (FCITCs) for transfers between specific sources and sinks was evaluated. The study found that the proposed project may incrementally impact the transfer capability of the NDEX interface based upon the delivery of power from the project to the Twin Cities area. The study also evaluated the impact of the proposed project on constrained interfaces in the MAPP system and found that the Power

Transfer Distribution Factor (PTDF) exceeds the maximum allowable threshold of 5% for the FTCAL_S interface. These distribution factors are provided for information only to identify potential third party flowgate issues for the requested delivery component of the transmission. As new interfaces are regularly added to the MAPP process, this listing may not include any recently added flowgates.

Stability Analysis:
The impact of this wind farm on local area transient stability was evaluated. The study found that the wind farm would be stable for transmission system faults at and near the wind farm. Also, the study found that the transient stability of other generators in the vicinity would not be adversely affected by the addition of this wind farm.

The Minnesota area is known to be stability constrained due to heavy import of power from coal mines in North Dakota and hydro generation in Manitoba. Various stability constraints such as North Dakota Export (NDEX) and Manitoba Hydro Export (MHEX) have been identified and are monitored on a regular basis. This study has evaluated the impact of this wind farm on the regional stability of the system. The study found that a fault at Chisago County (faults njz and nmz) led to voltage depression in Panther, McLeod and Willmar area. These voltage depressions were found to be within acceptable reliability criteria. Therefore the study concluded that the regional stability of the system is not adversely affected by the addition of this wind farm.

Short-Circuit Analysis:
Short-circuit analysis was performed to evaluate the impact of the proposed project on transmission system substation fault current levels. The purpose of this analysis was to determine whether the existing breakers at these substations would have adequate fault current interruption capability with the proposed project in service. Based on information provided by Western, a total of 7 breakers would likely need replacement prior to the interconnection of this project. A list of breakers that would likely need replacement is given in Table 5.2. The need for breaker replacement will be further reviewed and confirmed by the Transmission Owners during the Facilities Study.

As part of this interconnection study, Western performed a limited evaluation of the impact of the interconnections of the proposed White-Yankee-Buffalo Ridge 115kV and the Split Rock-Nobles 345kV lines on fault current levels at Sioux Falls and White (without GI-0108). Results indicate that the majority of the increase in the Pre-GI-0108 fault current levels at Western's Sioux Falls substation is due to the proposed XCEL transmission additions.

Need for 825 MW Transmission Upgrade by XCEL:
This study assumes that XCEL has built all the transmission facility upgrades related to 825 MW of wind transmission delivery capability from the Buffalo Ridge area to the Twin Cities. A list of transmission upgrades including the XCEL 825 MW wind transmission has been provided in Appendix A "Base Case Development". The XCEL 825 MW upgrades are scheduled to be completed by 2007. If this project intends to go into service before the XCEL transmission upgrades have been built, a sensitivity analysis must be performed to determine which of the XCEL transmission upgrades are needed for a reliable interconnection and operation of this new generator. For the GI-0108 request, some sensitivity analysis has already been completed in the "Sensitivity Analysis for White-Buffalo Ridge 115kV line, Western/MISO Coordinated Buffalo Ridge Group Study, IS Interconnection Request TI-0301" that identifies the incremental impact of the White-Buffalo Ridge 115kV line addition to this project. However, the base case

models for the evaluation of the GI-0108 request did assume that the other proposed XCEL transmission facilities would be in-service.

Facility Study Requirements:
Based upon the need to add a new interconnection into the White 345kV substation, and the need to review the replacement of the breakers identified in the study, a Facilities Study will be needed to continue the review of the generation interconnection request. Also, as outlined in Section 4.4, once the final substation configurations are determined in the Facilities Study, some limited stability analysis for local breaker failure scenarios will need to be completed, if necessary.

Power Factor Requirements at Point of Interconnection:
Based upon the proposed type of generating unit, power factor correction will be required as outlined in Western's "General Requirements for Interconnection". The requirements for power factor correction will be determined by Western during the Facilities Study.

LEGAL NOTICE

This document, prepared by ABB Inc., is an account of work sponsored by **Western Area Power Administration (WAPA)**. Neither ABB Inc., nor any person or persons acting on behalf of either party: (i) makes any warranty or representation, expressed or implied, with respect to the use of any information contained in this report, or that the use of any information, apparatus, method, or process disclosed in this report may not infringe privately owned rights, or (ii) assumes any liabilities with respect to the use of or for damages resulting form the use of any information, apparatus, method, or process disclosed in this document.

TABLE OF CONTENTS

1. INTRODUCTION 1

2. STUDY METHODOLOGY 2

2.1 STEADY STATE ANALYSIS 2
2.2 TRANSFER CAPABILITY ANALYSIS 4
2.3 TRANSIENT STABILITY PERFORMANCE 4
2.4 SHORT-CIRCUIT ANALYSIS 4

3. STEADY STATE ANALYSIS 5

3.1 BASE CASE DEVELOPMENT 5
3.2 SYSTEM INTACT ANALYSIS 6
3.3 N-1 CONTINGENCY ANALYSIS 12
3.4 IDENTIFICATION OF INTERCONNECTION RELATED FACILITY OVERLOADS 25
3.5 IDENTIFICATION OF TRANSMISSION SERVICE RELATED FACILITY OVERLOADS 25
3.6 N-2 CONTINGENCY ANALYSIS 27
3.7 TRANSFER CAPABILITY ANALYSIS 29

4. TRANSIENT STABILITY ANALYSIS 34

4.1 MODEL DEVELOPMENT 34
4.2 IMPACT ON LOCAL STABILITY 34
4.3 IMPACT ON REGIONAL STABILITY 37
4.4 SUMMARY OF STABILITY ASSESSMENT 40

5. SHORT-CIRCUIT ANALYSIS 41

5.1 BASE CASE DEVELOPMENT 41
5.2 SHORT-CIRCUIT CALCULATIONS 41

6. CONCLUSIONS 43

I. APPENDIX A BASE CASE DEVELOPMENT

II. APPENDIX B POWER FLOW RESULTS (SYSTEM INTACT CONDITIONS)

III. APPENDIX C DATA FILES USED FOR CONTINGENCY ANALYSIS

IV. APPENDIX D RESULTS FROM CONTINGENCY ANALYSIS

V. APPENDIX E MUST OUTPUT FOR N-1 ANALYSIS

VI. APPENDIX F MUST OUTPUT FOR TRANSFER CAPABILITY ASSESSMENT

VII. APPENDIX G CONSTRAINED INTERFACE ANALYSIS – DFCALC OUTPUT

VIII. APPENDIX H MODELING OF GI-0108 WIND FARM

IX. APPENDIX I GROUP 1 STABILITY SIMULATIONS

X. APPENDIX J SELECTED GI-0108 SIMULATION RESULTS

1. INTRODUCTION

Western Area Power Administration (WAPA) commissioned ABB Inc., to perform a Generation Interconnection Study for the interconnection of Project # GI-0108, a 200 MW wind generation to be connected at the White 345 kV substation. Figure 1.1 shows the schematic diagram for the interconnection of this project.

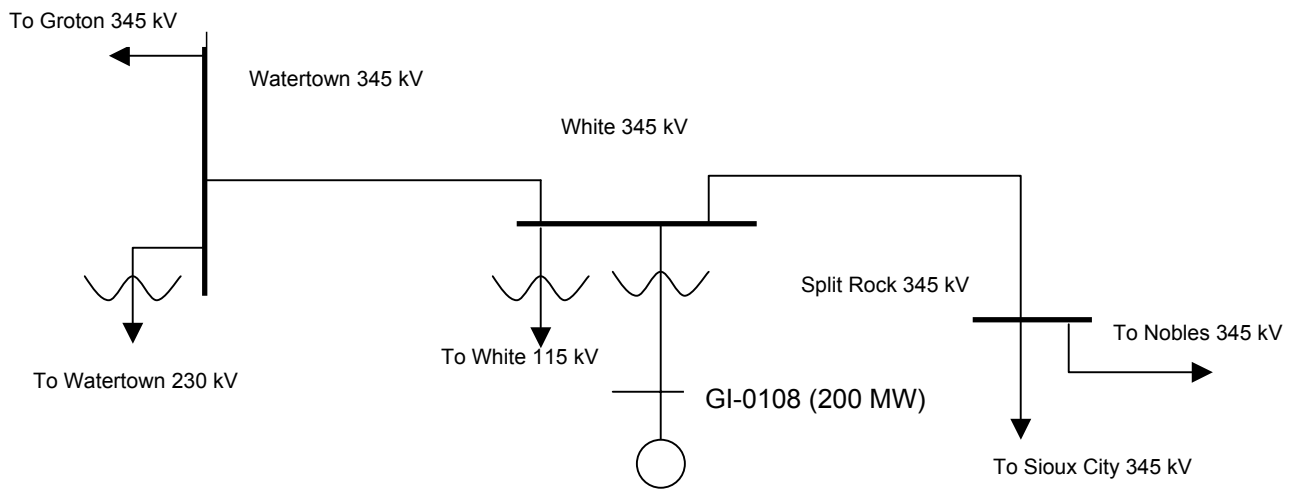

Fig 1.1: Interconnection Diagram for GI-0108

The interconnection study for GI-0108 included an evaluation of steady state performance, transient and dynamic stability.

Prior to performing this study, a group study[1] for the interconnection of 916.5 MW of wind-based generation (collectively known as Group 1 projects), in the vicinity of Buffalo Ridge area of Minnesota was performed. Project # GI-0108 is the first in a queue of seven generators comprising Group #1. Even though this report has been prepared to be self-contained and complete by itself, in order to avoid repetition of simulations and analyses, results from the Group 1 studies are utilized to the extent possible.

In this report, Section 2 elucidates the Study Methodology and the criteria used for the analyses. Section 3 gives the Steady State evaluation, starting with a summary of power flow base-case development, followed by System Intact and Contingency Analysis and the impact of GI-0108 on the interconnected system. Details of power flow model development for these studies are included as a separate Appendix. The Transfer Capability Analysis, which gives incremental impact of GI-0108 on the First Contingency Incremental Transfer Capabilities (FCITCs) for transfers between specific sources and sinks in the system, is also part of the steady state analysis. The impact of the new generator on the MAPP constrained interfaces is also included in this section. Section 4 provides the impact of the GI-0108 on the system transient and dynamic performance. Section 5 presents short-circuit analysis results.

[1] Coordinated Group Study – Study of Group #1 Generation Projects

2. STUDY METHODOLOGY

2.1 Steady State Analysis

The purpose of steady-state analysis is to analyze the impact of the proposed project on transmission system facilities under steady-state conditions. It involves two distinct analyses: thermal analysis and voltage analysis.

2.1.1 Thermal Analysis

System Intact Analysis:
The incremental impact of the GI-0108 project on thermal loading of transmission facilities under system intact conditions was evaluated by comparing transmission system power flows for 2007 summer peak and summer off-peak conditions with and without the GI-0108 project. For this purpose, full ac power flow solutions were used. The criteria used to flag thermal overloads is 100% of continuous facility rating (Rate A in PSS/E).

N-1 Contingency Analysis:
N-1 contingency analyses include single branch and selected multi-element contingencies for 2007 summer peak and off-peak conditions both with and without the GI-0108 project. Single branch as well as multiple circuit outages in the WAPA area and single branch contingencies in ALTW, GRE, OTP and XCEL Energy were considered. All facilities rated 69 kV and above were monitored in WAPA, ALTW, GRE, OTP and XCEL (except XCEL Wisconsin) and all facilities 100 kV and above were monitored in the MEC and MP areas.

Contingency analysis was performed using activity ACCC of PSS/E. The contingencies were solved with phase shifters and tap changers enabled. Thermal violations were flagged based on Rate A data for facilities (from PSS/E). Post-contingency power flows in excess of 90% of the Rate A were flagged. Non-convergent cases from these analyses were resolved manually and their violations were appended to the ACCC results. The SCREENACCC IPLAN program (from MAPP study package) was used to compare the contingency analysis results with and without the GI-0108 project.

Loading increases in transmission facilities result mainly from a MW flow increase and to some extent from low voltage situations leading to excessive MVAR flows. Making a distinction between the overloads caused by increase in MW flows from other causes is important. Voltage related problems are local in nature and can be resolved by providing local voltage support. Once a distinction based on the cause is made, the key limiting transmission facilities can be listed and prioritized based on the impact for deciding on possible reinforcement options. However, there is no direct way of identifying the cause of overload from the results of ac contingency analysis. But, power flow results based on DC techniques can be used in conjunction with AC power flow results for such purposes. In this study, a DC-power flow based analysis was performed using the MUST program (functionally equivalent to the TLTG Activity in the PSS/E Program) to verify that the facility overloads flagged in the ACCC results are indeed due to increase in MW flow and are directly attributable to the power transferred from GI-0108. MUST was instructed to study the power transfer from GI-0108 to the respective sink against which it was dispatched, using appropriate participation factors. The MUST output provides a list of all post-contingency thermal violations as a function of the study transfer (based on the computed Transfer Distribution Factor – TDF). The TDFs give the sensitivity of the limiting transmission facility, to the power injection being studied. The thermal violations flagged by

the MUST results were identified in the SCREENACCC results. A linearized loading (as a percentage the corresponding RATE A) was computed and compared with the percentage loading increase given by SCREENACCC results. These comparisons showed fairly good agreement in the majority of the cases, except in a few cases where the violations were not flagged by MUST. Upon further investigations, the violations that were not flagged by MUST were found to be unrelated to the GI-0108 project and are likely the result of:

- An overload listed in one ACCC output but absent in the other because of the latter failing to meet ACCC run criteria of at least 1MW change in flow on the overloaded facility between base case and contingency.

- The effect of discrete controls such as switched shunts and transformer taps in the ACCC solutions.

Conversely, all of the thermal violations in the MUST results were captured by ACCC/SCREENACCC analyses.

N-2 Contingency Analysis:
The purpose of N-2 contingency analysis is to determine transmission system thermal overloads following simultaneous outages of any two transmission system branches in the vicinity of the proposed project. The analysis was performed on the summer peak and off-peak cases both with and without the proposed project.

For the purposes of this analysis, a subsystem was defined consisting of buses (100 kV and above) in the vicinity of the interconnection points of the Group 1 units. Buses up to four levels away from each of the interconnection points of the Group 1 units were included in this subsystem. Engineering judgment was used to determine whether any other buses need to be included in or removed from this subsystem. Table C.1 in Appendix C contains a list of buses comprising the subsystem. The MUST program was then used to generate all combinations of N-2 contingencies (i.e., two simultaneous single contingencies) for all branches within the subsystem and tie-lines out of the subsystem. All facilities rated 69 kV and above were monitored in WAPA, ALTW, GRE, OTP and XCEL (except XCEL Wisconsin) and all facilities 100 kV and above were monitored in the MEC and MP areas. DC contingency analysis was performed using the MUST program and post-contingency power flows in excess of 90% of the Rate A ratings were recorded. Post-contingency loadings with and without the GI-0108 project were tabulated and compared.

As indicated above, facility loadings for all the above thermal analyses are computed based on the Rate A information. This rating could be the continuous rating under normal conditions, or in some cases, the de-rated capacity to account for any terminal equipment constraints or constraints imposed by transmission line clearances. Also, certain overhead transmission elements may have a higher conductor rating applicable during windy conditions, when the wind farms in the vicinity would be operating at near full output. The transmission owners would therefore need to determine if the reported transmission overloads are acceptable, considering all the above aspects.

2.1.2 Voltage Analysis

For system intact analysis, bus voltages that fall outside the band of 0.95pu – 1.05 pu are flagged as violations. For N-1 contingency analysis, bus voltages outside the range of 0.92-1.10 pu are flagged as criteria violations.

2.2 Transfer Capability Analysis

2.2.1 Impact of Proposed Project on FCITC

The incremental impact due to the addition of the GI-0108 project on the FCITCs for transfers between specific sources and sinks is evaluated. The basic methodology is to calculate the First Contingency Incremental Transfer Capabilities (FCITCs) associated with each transfer for two cases: a base case without the GI-0108 project and another case with the GI-0108 project added. Then the calculated FCITCs are compared to determine whether the GI-0108 project adversely impacts the transfer capability. The most limiting transmission facility and the contingencies that significantly contribute to the increased loading on the limiting facility (high sensitivity) are identified.

2.2.2 Constrained Interface Analysis

The purpose of the constrained interface analysis is to calculate the impact of the proposed project and associated transmission on specified constrained interfaces in the MAPP transmission system and the transmission systems of the host Transmission Owners (TOs). The MAPP DFCALC constrained interface analysis program is used for this purpose.

2.3 Transient Stability Performance

The purpose of these analyses was to determine whether the MAPP system would meet stability criteria following commissioning of the proposed GI-0108 project. To that end, local and regional contingencies were simulated under summer off-peak conditions with maximum simultaneous NDEX (≈1950 MW), MHEX (≈2175 MW), and MWSI (≈1480 MW) transfer levels. The studies were conducted utilizing the 9/19/03 MS Windows Version of the 2003 NMORWG Stability Package.

First, a stability-ready power flow case was developed to represent system conditions before the addition of the GI-0108 wind plant (i.e., the Pre-GI-0108 case). For the purposes of establishing base-line stability performance, a comprehensive stability analysis of the Pre-GI-0108 case was performed. This analysis established whether there are any stability concerns prior to the addition of GI-0108. If any stability issues were observed they would be properly identified before adding the GI-0108 project. Next, the GI-0108 wind plant was added to the Pre-GI-0108 power flow case to create the GI-0108 power flow case. The dispatch of existing generation and load was adjusted accordingly, utilizing the same guidelines as in the steady-state analyses. Then, the stability analysis was performed on the GI-0108 case to determine the stability of the new and existing units when the system was subjected to faults in the area, as well as critical faults in the region.

2.4 Short-Circuit Analysis

The purpose of short circuit analysis is to identify breakers in the transmission system that will not be able to handle the increased fault current due to the addition of the GI-0108 project. The proposed project was added to the baseline short-circuit model that was developed as part of the Group 1 Studies and the impact of this project on the increase in fault currents was determined.

3. STEADY STATE ANALYSIS

3.1 Base Case Development

The following power flow cases (2002 MAPP Series) were available for this study:

1. **F07suophx.sav** –2002 MAPP series, Summer off-peak case for the year 2007
2. **F07supk.sav**- 2002 MAPP series, Summer peak case for the year 2007

From these two cases, two base power flow cases (without the proposed GI-0108 project) were developed, representing i) Summer peak load conditions and ii) Summer off-peak load conditions (with maximum exports from North Dakota), by:

- Adding prior queue generating units (pre-group 1 units)

- Making topology changes (add new transmission lines, change transmission configurations, if any)

- Incorporating the reconductored /rebuilt (existing) transmission facilities

- Changing generation dispatch (for existing and newly added units)

The step-by-step process and the details of the base case development are provided in a separate Appendix (Appendix A). After establishing base-line power flow cases (i.e., the Pre-Group 1 powerflow cases), the GI-0108 generation project was added and dispatched against Twin Cities generation. This resulted in two additional power flow cases, one representing the summer peak load conditions and the other representing summer off-peak load conditions, but with the GI-0108 unit.

Table 3.1: GI-0108 Project Details

Project	MW	Location	Point of Interconnection	Sink Information
GI-0108	200	White, SD	White 345 KV substation	XCEL

Table 3.2 gives the export levels for the off-peak power flow conditions, to reflect a heavily stressed system scenario.

Table 3.2: Export Levels for Summer off-peak Power Flow Case

System Condition	Export Level (MW)		
	NDEX	MHEX_S	MWSI
Summer off-peak	1,951	2,172	1,475

3.2 System Intact Analysis

The power flows and voltages were checked in XCEL and WAPA areas (and also in the facilities of adjoining areas like OTP, GRE, ALTW, MEC, MP) to assess the impact of adding the GI-0108 generating unit. The criteria used for flagging thermal overloads is the Rate A information (from the PSS/E data). Bus voltages that fall outside the band of 0.95pu – 1.05 pu were flagged as violations. The IPLAN program, SOLVE (from the MAPP study package) was used to perform the power flow solution.

Figures 3.1a – 3.1d show the power flow diagram in the Buffalo Ridge region for summer peak and off peak conditions, for both with and without the GI-0108 unit. The power flow results, with incremental impact due to the addition of GI-0108 project (based on Rate A) on WAPA, XCEL and other adjoining systems are shown in Tables 3.3a and 3.3b, for summer peak and off-peak load conditions. The limiting elements listed in this table are segregated based on transmission ownership information as available from PSS/E power flow model and information provided by various transmission owners. The output listing from PSS/E is provided in Appendix B.

3.2.1 Summer Peak Conditions

As shown in Table 3.3a, the addition of GI-0108 results in base case overloads on the following transmission lines in the GRE system:

- Wwacnia – St Boni 115 kV (from 98.6% to 103.1% based on 71.4 MVA rating)
- Hutchpk8 – Hutchmn8 69 kV (from 98.3% to 101.0% based on 52.1 MVA rating)

According to GRE, the constraint in Dickinson – St. Boni 115 kV line is clearance related and has been earmarked for upgrades in the near future that will increase the line rating to 194 MVA. Such an upgrade is expected to resolve the overloads in Dickinson – St. Boni and Wwacnia – St. Boni 115 kV lines.

All other overloads listed in Table 3.3a are pre-existing.

No voltage violations were observed in the Buffalo Ridge region. However, voltage criteria violations were observed at several buses outside Buffalo Ridge region. These are pre-existing and the incremental impact due to the GI-0108 project is only marginal.

3.2.2 Summer Off-Peak Conditions

All the overloads listed in Table 3.3b are pre-existing. The following ALTW lines showed increased loadings after the addition of GI-0108.

- Hazl – Dundee 161 kV (from 100.3% to 114.8% based on 167 MVA rating)
- Elk – Heron Lk 161 kV (from 116.8% to 121.1% based on 112 MVA rating)
- Kellert – Grriver 69 kV (from 101.0% to 103.6% based on a 12 MVA rating)
- Poweria – Emeryn161 kV (from 108.3% to 109.6% based on 300 MVA rating)

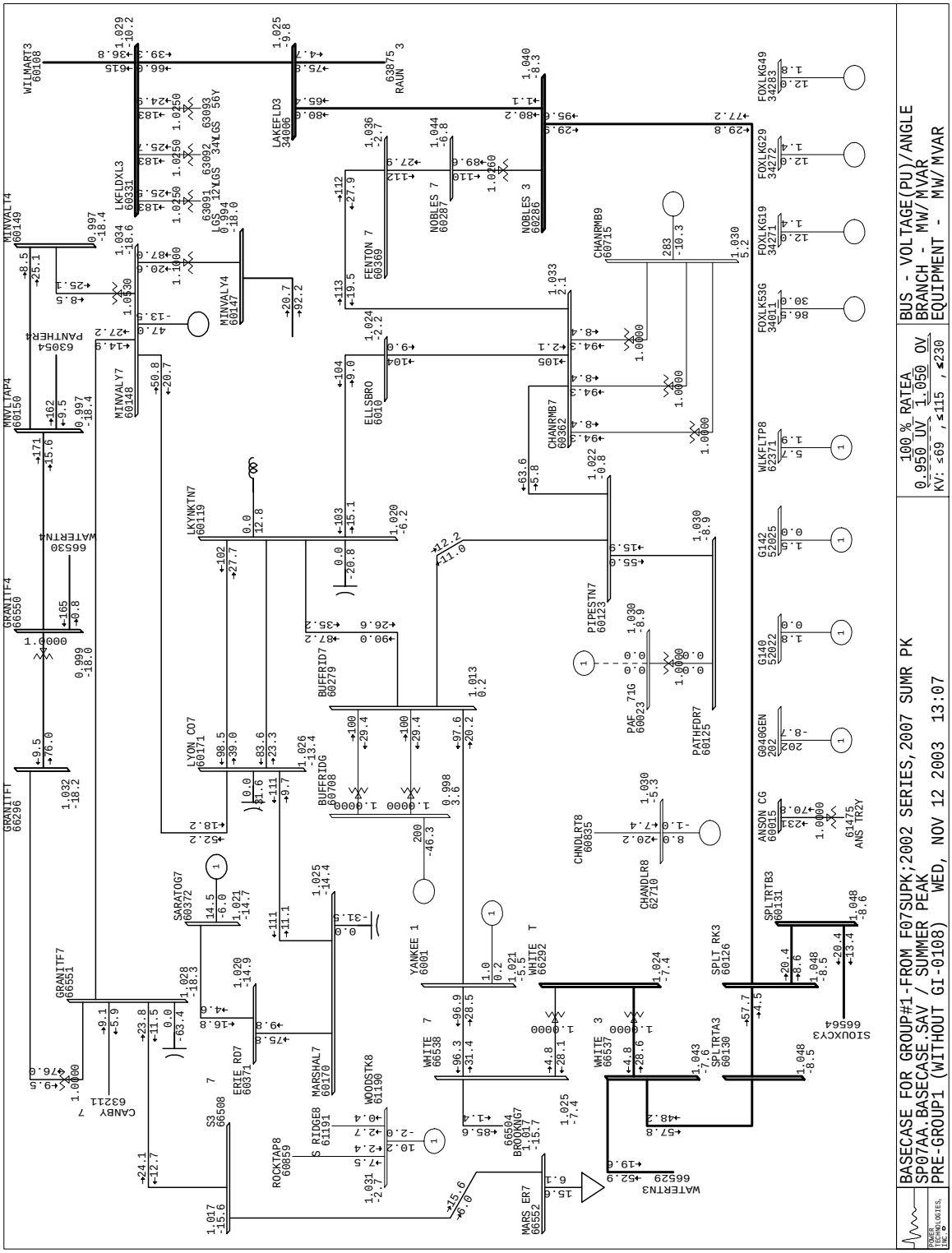

Figure 3.1a: Power Flow in Buffalo Ridge Area For Summer Peak Load Conditions – Without GI-0108

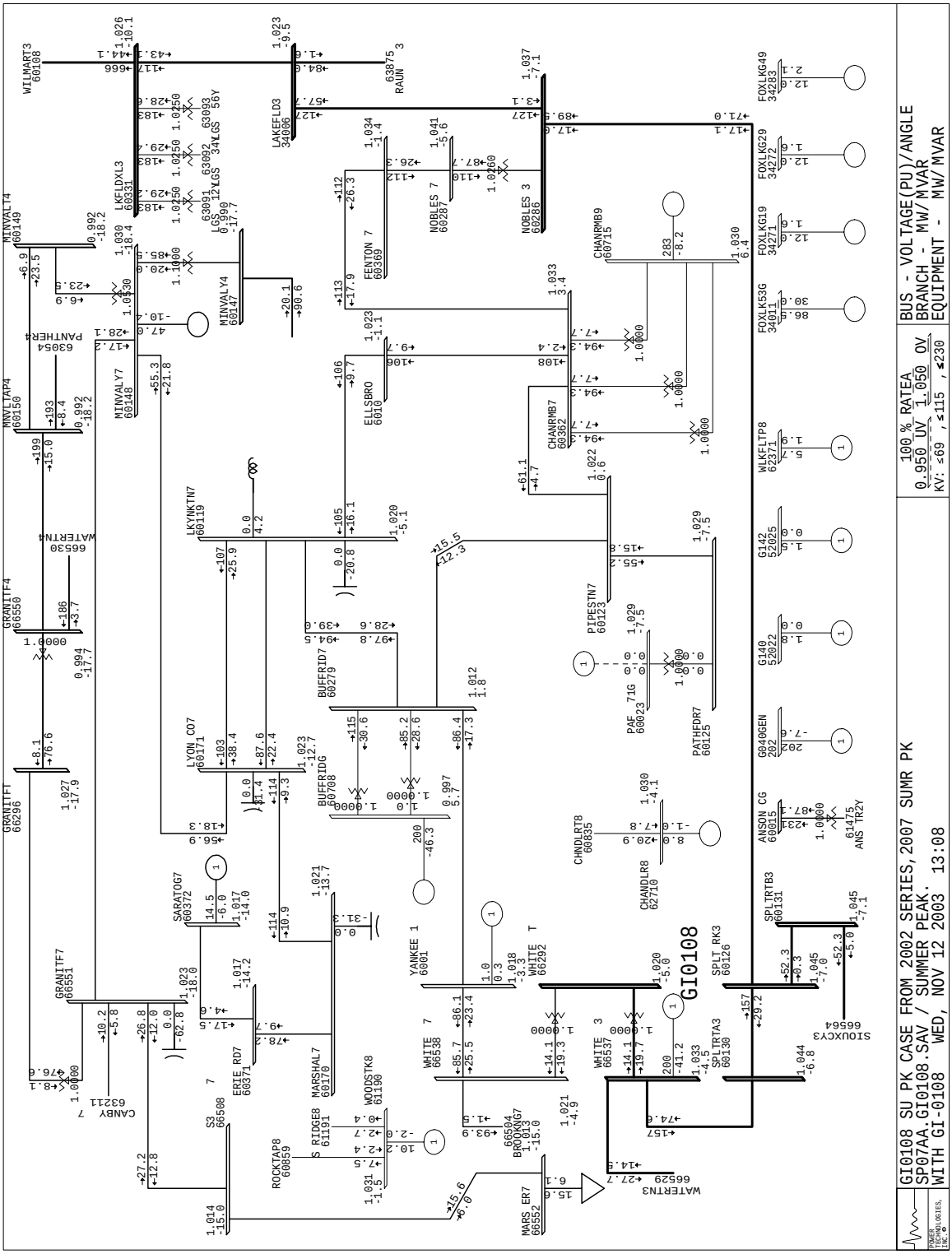

Figure 3.1b: Power Flow in Buffalo Ridge Area For Summer Peak Load Conditions – With GI-0108

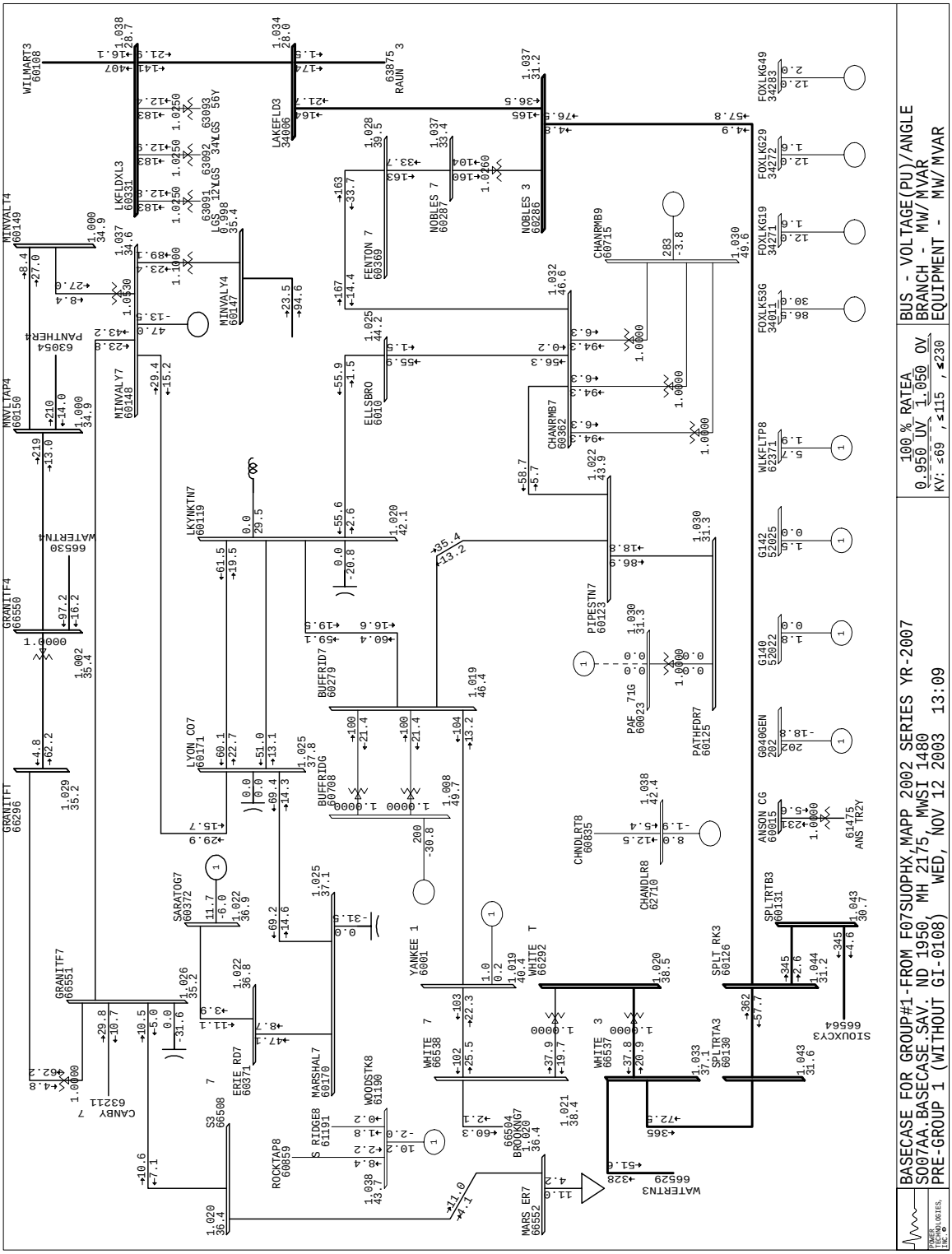

Figure 3.1c: Power Flow in Buffalo Ridge Area For Summer Off-Peak Load Conditions – Without GI-0108

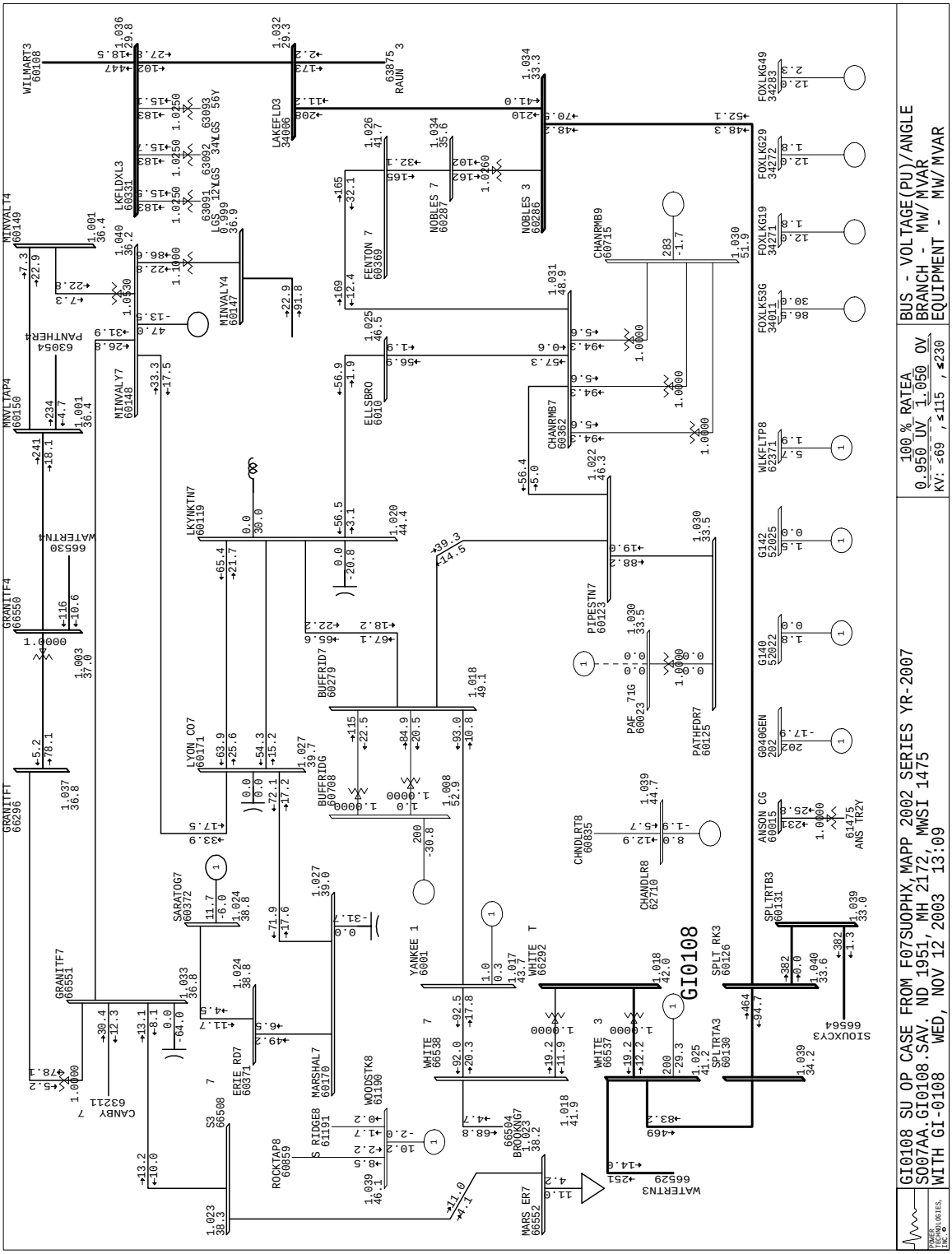

Figure 3.1d: Power Flow in Buffalo Ridge Area For Summer Off-Peak Load Conditions – With GI-0108

No voltage violation was observed in the Buffalo Ridge region. However, voltage criteria violations were observed at several buses outside Buffalo Ridge region. These are pre-existing and the incremental impact due to the GI-0108 project is only marginal, similar to those for the summer peak conditions.

Table 3.3a: Transmission Facility Loading Changes Under System Intact Conditions (Summer Peak)

LIMITING ELEMENT							LOADING (%)			
#	NAME	kV	#	NAME	kV	RATING [MVA]	WITH GI-0108	WITHOUT GI-0108	CHANGE	PTDF
ALTW										
34004	ELK	161	34005	HRN LK	161	112	104.5	100	4.5	0.0240
34001	POWERIA	161	34016	EMERYN	161	300	107.8	106.3	1.5	0.0230
62368	RNDLKTP	69	62371	WLKFLTP	69	19	109.2	108.9	0.3	0.0000
GRE										
60277	WWACNIA	115	62667	ST BONI	115	71.4	103.1	98.6	4.5	0.0160
62925	DICKNSN	115	62667	ST BONI	115	71.4	166.9	162.6	4.3	0.0155
62985	HUTCHPK8	69	62986	HUTCHMN8	69	52.1	101	98.3	2.7	0.0070
60710	FARM TP	69	62839	BGFSHTP	69	19.3	138.3	136.4	1.9	0.0020
62293	RUSH CY	69	63048	RUSH CY	230	84	106.4	106.3	0.1	0.0005
62934	HOWARDL	69	62943	VICTOR	69	17.3	109.2	109.7	-0.5	-0.0010

Table 3.3b: Transmission facility loading changes under system intact conditions (Summer off-peak)

LIMITING ELEMENT							LOADING (%)			
#	NAME	kV	#	NAME	kV	RATING [MVA]	WITH GI-0108	WITHOUT GI-0108	CHANGE	PTDF
ALTW										
34020	HAZL	161	34135	DUNDEE	161	167	114.8	100.3	14.5	0.0890
34004	ELK	161	34005	HRN LK	161	112	121.1	116.8	4.3	0.0235
34641	KELLERT	69	34643	GRRIVER	69	12	103.6	101	2.6	0.0015
34001	POWERIA	161	34016	EMERYN	161	300	109.6	108.3	1.3	0.0215

Note: The Power Transfer Distribution Factors (PTDFs) listed in the above tables are the AC PTDFs.

3.3 N-1 Contingency Analysis

After establishing the base cases, the steady-state performance was compared by performing power flow contingency analyses, on the summer peak and off-peak cases. The analyses were conducted using the Activity ACCC of PSS/E. The thermal violations were flagged based on Rate A data for facilities (from PSS/E). This rating could be the continuous rating under normal conditions, or in some cases, the de-rated capacity to account for any terminal equipment constraints or constraints imposed by transmission line clearances. Also, certain overhead transmission elements may have a higher conductor rating applicable during windy conditions, when the wind farms in the vicinity would be operating at near full output. The transmission owners would therefore need to determine if the reported transmission overloads are acceptable, considering all the above aspects. Bus voltages outside the range of 0.92-1.10 pu were flagged as criteria violations.

Single branch as well as multiple circuit outages, were studied in XCEL area. In addition, single branch contingencies in WAPA, ALTW, GRE and OTP were studied. All facilities 69 kV and above were monitored in XCEL, WAPA, ALTW, GRE, OTP and all facilities 100 kV and above were monitored in MEC and MP area. Appendix C summarizes the corresponding .MON, .CON, and .SYS files utilized in the studies, as well as copy of a typical IDEV file employed to perform the contingency analysis. Non-convergent cases from these analyses were resolved manually and their violations were appended to the ACCC results. Contingency results were then post-processed using the SCREENACCC IPLAN program. This IPLAN program compares the contingency analysis results with and without the GI-0108 unit and reports the incremental impacts.

Appendix D gives the comparison of contingency analysis results (pre-GI-0108 Vs GI-0108 conditions). Appendix E provides the limiting element/contingency pairs identified by MUST, along with the respective TDFs.

3.3.1 Summer Peak Conditions

Table 3.5 gives a list of limiting elements and the associated contingencies that cause the overload, along with a comparison of the facility loading in percentage with and without the GI-0108 unit. This table lists only the most limiting contingency (one which causes highest overload) and the corresponding loading for each limiting element that was identified in the contingency analysis. Facilities that have a change in loading of less than 1% are not listed.

3.3.1.1 Impact of GI-0108 on Facility Loading

The following sub-sections discuss the impact of GI-0108 units in each of the affected areas that are listed in Table 3.5:

Impact on ALTW facilities

In ALTW area, several facilities were loaded over and above the respective rating (continuous) upon the loss of Wilmarth – LGS 345 kV line section, before the addition of GI-0108. The addition of GI-0108 incrementally increases these pre-existing overloads as indicated in Table 3.4. As per the MAPP Operating Guide[2], the LGS units are set to trip for this contingency, in order to resolve the overloading in the underlying 161 kV and 69 kV systems. This special protection scheme is implemented to maintain appropriate operation of the Lakefield Generating Station and Buffalo Ridge Wind Farm, while maintaining a secure transmission system during normal and emergency conditions. The implementation of this generation tripping scheme, does not necessarily resolve all the overloads caused by the loss of Wilmarth – LGS 345 kV line. However some of the overloads are reduced, as shown below (The values in parenthesis show the loading prior to the tripping of LGS plant):

									% Loading	
BUS	**NAME**	**BSKV**	**AREA**	**BUS**	**NAME**	**BSKV**	**AREA**	**CKT**	**RATING**	**W/GI-0108**	**W/O GI-0108**
34251	MADLIAJ869.0	331		34267*	HANSKAT869.0	331		1	27.0	127.2(159.4)	115 (145.8)
34251*	MADLIAJ869.0	331		60701	MADELVL869.0	600		1	36.0	81 (106.6)	73 (96.5)

The Lime Ck – Emeryn 161 kV line was marginally overloaded after the addition of GI-0108 (102%) for the loss of Emeryn – Floyd 161 kV. Prior to the addition of GI-0108, the loading was 98.5% for the same outage. All other overloads are pre-existing and are incrementally increased upon the addition of GI-0108 project. Based on the information provided by ALTW, capacities of the following facilities (Table 3.4) are constrained by terminal equipment and replacement of the constrained terminal equipment is expected to resolve any loading limitations on those lines.

[2] Lakefield Generating Station and Buffalo Ridge Wind Farm Summer Operating Guide, issued on 5/4/2001

Table 3.4 Facilities with Terminal Equipment Constraints in ALTW Area

FROM BUS #	FROM BUS NAME	kV	TO BUS #	TO BUS NAME	kV	COMPONENT CAUSING THE LIMITATION
34300	MONTGMY	69	34301	NEWPRAG	69	CT's/Jumpers
34004	ELK	161	34005	HRN LK	161	Wavetrap/CT's/Switches
61934	RUTLAND	69	61942	10TH STR	69	CT's
34005	HRN LK	161	34007	LAKEFLD	161	Wavetrap
34280	TRUMAN	69	61934	RUTLAND	69	CT's
34010	HAYWARD	161	34013	WNBAGOS	161	Switch/CT's/Relay
34138	DUNDEE	69	34521	GRELYTP	69	CT's/Metering
34463	LORE W	69	34469	GARDLAN	69	CT's

Impact on GRE facilities

In the GRE area, the biggest impact along the transfer path from Buffalo Ridge to Twin Cities is a 7.3% loading increase in Panther 230/69 kV transformer (increase from 103.1% to 110.4%) for the loss of Panther-McLeod 230 kV line. Another impact of adding the GI-0108 units is an increase of pre-existing overload (about 7.0%) in Willmar – Pnncktp (from 117% to 124%) and Granite Falls – Pnncktp (125% to 132%) 69 kV lines, for the loss of Willmar – Granite Falls 230 kV line. All other facility overloads are pre-existing, which are increased only marginally after the addition of GI-0108.

Impact on OTP facilities

The biggest impact in OTP area is the increase of loading on John Jct - Ortonville 115 kV line (for the loss of Wahpeton - Hankson 230 kV line). Here, the facility loading increased from 103% (pre-GI-0108 condition) to 104.8% upon the addition of GI-0108, a 4.8% increase.

Impact on XCEL facilities

The loss of Marshal – Lyon Co 115 kV line causes an overload of 105.6% in Minnesota Valley – Lyon Co 115 kV line, based on its rating of 120 MVA. Prior to the addition of GI-0108 generation, this line was loaded to 99.6% for the same contingency. However, based on XCEL information, the loading constraint in Minnesota Valley – Lyon Co line is due to a limitation imposed by terminal equipment (limited to 600 amps or 120 MVA). If this terminal equipment is replaced with one that has a rating comparable to the conductor rating of 225 MVA, the loading will be well within the conductor rating. Based on information provided by XCEL, the Minnesota Valley – Lyon County 115 kV line rating will not be equipment limited after planned upgrades at Minnesota Valley are completed. Therefore, it is expected this overload will not be an issue after 825 MW upgrades are implemented.

Therefore, no new overloads are observed in the Buffalo Ridge area after the addition of GI-0108 project.

Buffalo Ridge – Twin City Transfer Path/ Twin City Region: Traverse Pnlpn Tp 69 kV line becomes overloaded with the addition of GI-0108, for the X0982-089P1 contingency (117.2%). Without this unit, the loading was at 107.4% of its 139 MVA rating.

The addition of GI-0108 indicated a new overload, albeit marginal (103.8%), on 345/115 kV transformer at Eden Prairie, for the loss of parallel transformer. Also observed, was a new overload on Eden Prairie – Edina 115 kV, for the multiple outage,'EDP-WSG/WSG7' (107.8% based on Rate A value of 318 MVA). The closing of bus-tie breakers at Aldrich 115 kV station, did not mitigate the increased loading on Edina – Eden Prairie Line.

All other overloads are pre-existing which were marginally increased after the addition of GI-0108.

Impact on WAPA facilities

All overloads are pre-existing and the impact of the GI-0108 units is only marginal.

Table 3.5: Transmission Facility Loading Increases Under N-1 Conditions (Summer Peak)

LIMITING ELEMENT							Rating (MVA)			CONTINGENCY		LOADING BASED ON RATE A(%)		LOADING CHANGE (%)
F BUS#	NAME	KV	T BUS#	NAME	KV	CKT	A	B	C		TDF	WITHOUT GI-0108	WITH GI-0108	
ALTW														
34251	MADLIAJ8	69	34267	HANSKAT8	69	1	27	27	27	60108 WILMART3 345 - 60331 LKFLDXL3 345 ckt 1	0.01885	145.8	159.4 (127.2)	13.6
34251	MADLIAJ8	69	60701	MADELVL8	69	1	36	39.6	36	60108 WILMART3 345 - 60331 LKFLDXL3 345 ckt 1	0.01885	96.5	106.6	10.1 (NEW)
61934	RUTLAND	69	61942	10TH STR	69	1	36	36	36	34008 FOX LK 5 161 - 61932 RUTLAND5 161 ckt 1	0.01313	106.4	113.5	7.1
34280	TRUMANT8	69	61934	RUTLAND	69	1	36	36	36	60108 WILMART3 345 - 60331 LKFLDXL3 345 ckt 1	0.00889	117.7	123.1 (111.3)	5.4
34004	ELK 5	161	34005	HRN LK 5	161	1	112	112	112	34136 TRIBOJI8 69 - 35003 CLIPPER3 69 ckt 1	0.02943	116.3	121.0	4.7
34016	EMERYN	161	34082	EMERYS 5	161	1	202	202	202	34001 POWERIA 161 - 34016 EMERYN 161 ckt 1	0.03756	162.7	166.4	3.7
34015	LIME CK5	161	34016	EMERYN	161	1	193	193	193	34016 EMERYN 161 - 64252 FLOYD 5 161 ckt 1	0.03523	98.5	102.0	3.5
34014	ADAMS 5	161	61984	AUSTIN 5	161	1	223	223	223	63032 PL VLLY3 345 - 63070 PL VLLY5 161 ckt 1	0.01629	113.1	114.6	1.5
34530	WELSBRGY	115	63734	WELSBRG8	69	1	40	40	40	34068 M-TOWN 5 161 - 34079 TRAER 5 161 ckt 1	0.00251	99.9	101.2	1.3
34001	POWERIA	161	34016	EMERYN	161	1	300	300	300	34082 EMERYS 5 161 - 63730 HAMPTON5 161 ckt 1	0.01634	120.6	121.7	1.1
GRE														
63054	PANTHER4	230	60742	PANTHER8	69	1	70	70	87.5	62980 MCLEOD 4 230 - 63054 PANTHER4 230 ckt 1	0.02861	103.1	110.4	7.3
62429	PNNCKTP8	69	66298	GRANITF8	69	1	24.3	24.3	26.7	63050 WILLMAR4 230 - 66550 GRANITF4 230 ckt 1	0.00873	124.9	131.8	6.9
62427	WILLMAR8	69	62429	PNNCKTP8	69	1	24.3	24.3	26.7	63050 WILLMAR4 230 - 66550 GRANITF4 230 ckt 1	0.00873	117.0	123.9	6.9
62925	DICKNSN7	115	62667	ST BONI7	115	1	71.4	71.4	78.6	PKL-DKN/ECK3	0.02138	223.2	228.9	5.7
61653	RIVERTN7	115	62180	RIVTON 8	69	1	56	56	70	62479 BALLCLB8 69 - 62487 DEER RV8 69 ckt 1	0.00396	108.3	109.5	1.2
60710	FARM TP8	69	62839	BGFSHTP8	69	1	19.3	19.3	21.3	60760 PAYNES 8 69 - 62824 ZION TP8 69 ckt 1	0.00097	192.0	193.2	1.2
XCEL														
60208	EDINA 7	115	60263	EDEN PR7	115	1	318	318	349	EDP-WSG/WSG7	0.19074	97.2	107.8	10.6 (NEW)
60826	TRAVRSE8	69	62323	PNLPNTP8	69	1	47	47	51.7	X0982-0898P1	0.02512	107.4	117.2	9.8
60650	WILMART8	69	62336	JHNSNTP8	69	1	66	66	72.6	X0982-0898P1	0.02512	109.9	117.0	7.1
60262	EDEN PR3	345	60263	EDEN PR7	115	1	448	448	582	60262 EDEN PR3 345 - 60263 EDEN PR7 115 ckt 2	0.15408	97.7	103.8	6.1 (NEW)
60148	MINVALY7	115	60171	LYON CO7	115	1	120	120	120	60170 MARSHAL7 115 - 60171 LYON CO7 115 ckt 1	0.03681	99.6	105.6	6.0 (NEW)
60194	CARVRCO7	115	60277	WWACNIA7	115	1	71.4	71.4	78.6	PKL-DKN/ECK3	0.01895	110.6	115.8	5.2
60277	WWACNIA7	115	62667	ST BONI7	115	1	71.4	71.4	78.6	009 5	0.01895	140.6	145.6	5.0

LIMITING ELEMENT							Rating (MVA)			CONTINGENCY		LOADING BASED ON RATE A(%)		LOADING CHANGE (%)
F BUS#	NAME	KV	T BUS#	NAME	KV	CKT	A	B	C		TDF	WITHOUT GI-0108	WITH GI-0108	
60145	FRANKLN7	115	60728	FRANKLN8	69	1	47	47	61	60145 FRANKLN7 115 - 60728 FRANKLN8 69 ckt 2	0.01175	101.5	105.7	4.2
60145	FRANKLN7	115	60728	FRANKLN8	69	2	47	47	61	60145 FRANKLN7 115 - 60728 FRANKLN8 69 ckt 1	0.01175	101.5	105.7	4.2
60105	PR ISLD3	345	60236	REDROCK3	345	2	568	568	625	PRI-BLL/RRK3	0.11054	132.0	135.9	3.9
60103	CANNFLS5	161	63071	SPRNGCK5	161	1	90	90	99	PRI-RRK/RRK3	0.01455	110.5	113.4	2.9
60156	PYNSVIL7	115	60760	PAYNES 8	69	P1	47	47	54	60156 PYNSVIL7 115 - 60760 PAYNES 8 69 ckt P2	0.00640	119.7	122.0	2.3
60156	PYNSVIL7	115	60760	PAYNES 8	69	P2	47	47	54	60156 PYNSVIL7 115 - 60760 PAYNES 8 69 ckt P1	0.00640	119.7	122.0	2.3
60788	VALLYTP8	69	60789	CIRCLTP8	69	1	48	48	52.8	60787 NOFIELD8 69 - 60801 CNFLSTR8 69 ckt 1	0.00882	101.6	103.3	1.7
60789	CIRCLTP8	69	60790	FAIRPRK8	69	1	48	48	52.8	60787 NOFIELD8 69 - 60801 CNFLSTR8 69 ckt 1	0.00882	113.9	115.5	1.6
60790	FAIRPRK8	69	60791	FARIBLT8	69	1	48	48	52.8	60790 FAIRPRK8 69 - 60792 WFARBLT8 69 ckt 1	0.00766	112.0	113.6	1.6
60110	WILMART7	115	60650	WILMART8	69	1	70	70	91	60110 WILMART7 115 - 60650 WILMART8 69 ckt 2	0.00657	109.0	110.4	1.4
60110	WILMART7	115	60650	WILMART8	69	3	70	70	91	60110 WILMART7 115 - 60650 WILMART8 69 ckt 2	0.00657	109.0	110.4	1.4
60110	WILMART7	115	60650	WILMART8	69	2	70	70	91	60110 WILMART7 115 - 60650 WILMART8 69 ckt 3	0.00659	109.4	110.8	1.4
60153	MNTCELO7	115	60269	HASSAN 7	115	1	140	140	154	009 2	0.00942	106.4	107.6	1.2
OTP														
62003	JOHNJCT7	115	63216	ORTONVL7	115	1	96.6	96.6	106.2	63327 HANKSON4 230 - 63329 WAHPETN4 230 ckt 1	0.02410	103.0	107.8	4.8
WAPA														
67201	LELND1TY	345	67106	LELANDO4	230	1	250	250	300	67105 LELANDO3 345 - 67202 LELND2TY 345 ckt 1	0.06125	107.5	112.6	5.1
66551	GRANITF7	115	66298	GRANITF8	69	1	42	42	52	63050 WILLMAR4 230 - 66550 GRANITF4 230 ckt 1	0.00873	107.5	111.6	4.1
66203	FARGO 8	69	67000	MAPLE R8	69	1	41	41	45	60133 SHEYNNE4 230 - 66435 FARGO 4 230 ckt 1	0.00636	155.4	158.8	3.4
66561	DENISON5	161	66582	DENISN 8	69	1	50	50	63	66561 DENISON5 161 - 66582 DENISN 8 69 ckt 2	0.00400	142.7	143.9	1.2
66561	DENISON5	161	66582	DENISN 8	69	2	50	50	63	66561 DENISON5 161 - 66582 DENISN 8 69 ckt 1	0.00403	143.8	145.0	1.2
66562	EAGLE 4	230	66579	EAGLE 8	69	1	60	60	75	66562 EAGLE 4 230 - 66579 EAGLE 8 69 ckt 2	0.00667	141.5	142.7	1.2

3.3.1.2 Impact of GI-0108 units on Bus Voltages

No new voltage related issues were identified after the addition of GI-0108 project. All the monitored buses had their bus voltages affected only marginally (<0.01 pu) after the addition of GI-0108 unit.

3.3.2 Summer Off-Peak Conditions

3.3.2.1 Impact of GI-0108 units on Facility Loading

The following sub-sections discuss the impact of GI-0108 in each of the affected areas that are listed in Table 3.6. Facilities that have a change in loading of less than 1% are not listed.

Impact on ALTW facilities

The overloads in Hayward-Winnebago and Rutland-10th St are pre-existing, imposed by terminal equipment and are expected to be resolved after replacing the concerned terminal equipment.

Impact on GRE facilities

In the GRE area, the biggest impact of adding GI-0108 is the observed 7% loading increase in Willmar – Pnncktp and Granite Falls – Pnncktp 69 kV lines, for the loss of Willmar-Granite Falls 230 kV line. The loading increase on these lines were observed in the summer peak case as well and are pre-existing conditions. Also, the loading impact along the transfer path from Buffalo Ridge to Twin Cities includes a 6.3% loading increase in Panther 230/69 kV transformer (increase from 117.4% to 123.7% with GI-0108 units) for the loss of Panther-McLeod 230 kV line.

Impact on MEC facilities

In MEC service area, the addition of GI-0108 produced a new overload, albeit marginal (102%), on Union Tap – Butler 161 kV line for the loss of Emeryn-Floyd 161 kV line.

Impact on OTP facilities

All overloads are pre-existing and the addition of GI-0108 only causes a marginal increase in those overloads.

Impact on XCEL facilities

Buffalo Ridge and Vicinity: No new overloads were observed in the Buffalo Ridge region.

Buffalo Ridge – Twin City Transfer Path/Twin City Region: Impacts on XCEL facilities are only marginal and are listed in Table 3.6.

Impact on WAPA facilities

All overloads in WAPA area are pre-existing, i.e. prior to the addition of GI-0108 and are only marginally impacted by GI-0108, as shown in Table 3.6.

3.3.2.2 Impact of GI-0108 units on Bus Voltages

Most of the monitored buses had their bus voltages affected only marginally (<0.01 pu) after the addition of GI-0108 units. However, these buses had voltage violations in the pre -GI-0108 conditions.

Table 3.6: Transmission Facility Loading Increases Under N-1 Conditions (Summer Off-Peak)

LIMITING ELEMENT							RATING (MVA)			CONTINGENCY	TDF	LOADING BASED ON RATE A (%)		LOADING CHANGE (%)
F BUS#	NAME	KV	T BUS#	NAME	KV	CKT	A	B	C			WITHOUT GI-0108	WITH GI-0108	
ALTW														
34020	HAZL S 5	161	34135	DUNDEE 5	161	1	167	167	167	34018 HAZLTON 3 345 - 34093 ARNOLD3 345 ckt 1	0.00168	100.9	115.6	14.7
61934	RUTLAND	69	61942	10TH STR	69	1	36	36	36	34008 FOX LK 5 161 - 61932 RUTLAND5 161 ckt 1	0.01322	135.6	141.5	5.9
34004	ELK 5	161	34005	HRN LK 5	161	1	112	112	112	34136 TRIBOJI8 69 - 35003 CLIPPER3 69 ckt 1	0.02966	135.7	140.3	4.6
34641	KELLERT8	69	34643	GRRIVER8	69	1	12	12	12	34587 MURRAY 8 69 - 34658 OSCEOLA8 69 ckt 1	0.00196	145.9	149.6	3.7
34016	EMERYN	161	34082	EMERYS 5	161	1	202	202	202	34001 POWERIA 161 - 34016 EMERYN 161 ckt 1	0.03832	167.5	170.8	3.3
34643	GRRIVER8	69	34644	ELLSTNR8	69	1	12	12	12	34585 LORIMRR8 69 - 34588 SLAKEN 8 69 ckt 1	0.00178	138.6	141.6	3.0
34010	HAYWARD5	161	34013	WNBAGOS5	161	1	167	167	167	PRI-BYN/RRK3	0.00469	115.4	118.4	3.0
34137	TRIBOJI5	161	66563	SPENCER5	161	1	195	195	195	60108 WILMART3 345 - 60331 LKFLDXL3 345 ckt 1	0.01926	105.4	108.4 (76.8)	3.0
34136	TRIBOJI8	69	35003	CLIPPER3	69	1	58	58	58	34004 ELK 5 161 - 34005 HRN LK 5 161 ckt 1	0.00661	110.6	112.8	2.2
34590	GRDRVRE8	69	34643	GRRIVER8	69	1	12	12	12	34650 ARISTAP8 69 - 34653 CRESTN8 69 ckt 1	0.00102	128.6	130.5	1.9
34061	BNE JCT5	161	34076	BNE JCT7	115	3	45	45	45	34061 BNE JCT5 161 - 34076 BNE JCT7 115 ckt 2	0.00230	146.9	148.0	1.1
34001	POWERIA	161	34016	EMERYN	161	1	300	300	300	34082 EMERYS 5 161 - 63730 HAMPTON5 161 ckt 1	0.01674	124.9	126.0	1.1
GRE														
62429	PNNCKTP8	69	66298	GRANITF8	69	1	24.3	24.3	26.7	63050 WILLMAR4 230 - 66550 GRANITF4 230 ckt 1	0.00940	107.7	114.8	7.1
62427	WILLMAR8	69	62429	PNNCKTP8	69	1	24.3	24.3	26.7	63050 WILLMAR4 230 - 66550 GRANITF4 230 ckt 1	0.00940	101.7	108.8	7.1
63054	PANTHER4	230	60742	PANTHER8	69	1	70	70	87.5	62980 MCLEOD 4 230 - 63054 PANTHER4 230 ckt 1	0.02692	117.4	123.7	6.3
60710	FARM TP8	69	62839	BGFSHTP8	69	1	19.3	19.3	21.3	60752 BLCKOAK8 69 - 60754 MELRSMU8 69 ckt 1	0.00474	123.7	126.9	3.2
62933	HIGHLND8	69	62934	HOWARDL8	69	1	13.7	13.7	15	60717 WAKEFLD8 69 - 62846 FRHV TP8 69 ckt 1	0.00380	104.6	107.2	2.6
62934	HOWARDL8	69	62943	VICTOR 8	69	1	17.3	17.3	19	60717 WAKEFLD8 69 - 62846 FRHV TP8 69 ckt 1	0.00380	103.0	105.0	2.0
MEC														
64256	UNIONTP5	161	64285	BUTLER 5	161	1	181	181	181	34016 EMERYN 161 - 64252 FLOYD 5 161 ckt 1	0.01482	98.5	102.0	3.5 (NEW)
64239	FRANKLN5	161	64285	BUTLER 5	161	1	181	181	181	34016 EMERYN 161 - 64252 FLOYD 5 161 ckt 1	0.01482	101.6	105.0	3.4
XCEL														
60718	BIRDISL8	69	60742	PANTHER8	69	1	68	68	68	60148 MINVALY7 115 - 61954 REDFLST7 115 ckt P1	0.00880	103.4	106.4	3.0
60153	MNTCELO7	115	60269	HASSAN 7	115	1	140	140	154	009 2	0.01732	104.8	106.2	1.4
OTP														
63223	HOOT LK7	115	63231	FERGSFL7	115	1	96	96	105	63051 HENNING4 230 - 63331 FERGSFL4 230 ckt 1	0.01983	101.7	105.2	3.5
WAPA														
66574	SIOUXCY8	69	63890	PLYMOTH8	69	1	45	64	50	66566 SIOUXCY5 161 - 63889 PLYMOTH5 161 ckt 1	0.01146	108.4	113.9	5.5

LIMITING ELEMENT							RATING (MVA)			CONTINGENCY	TDF	LOADING BASED ON RATE A (%)		LOADING CHANGE (%)
F BUS#	NAME	KV	T BUS#	NAME	KV	CKT	A	B	C			WITHOUT GI-0108	WITH GI-0108	
66203	FARGO 8	69	67000	MAPLE R8	69	1	41	41	45	60133 SHEYNNE4 230 - 66435 FARGO 4 230 ckt 1	0.00716	98.5	101.5	3.0 (NEW)
66566	SIOUXCY5	161	66574	SIOUXCY8	69	1	75	75	94	66566 SIOUXCY5 161 - 63889 PLYMOTH5 161 ckt 1	0.00899	103.2	105.8	2.6
66582	DENISN 8	69	66583	DENISON8	69	1	100	100	125	34047 ANTA TP5 161 - 66561 DENISON5 161 ckt 1	0.00976	103.8	106.1	2.3
66562	EAGLE 4	230	66579	EAGLE 8	69	1	60	60	75	66562 EAGLE 4 230 - 66579 EAGLE 8 69 ckt 2	0.00679	116.4	118.4	2.0
66561	DENISON5	161	66582	DENISN 8	69	2	50	50	63	66561 DENISON5 161 - 66582 DENISN 8 69 ckt 1	0.00412	122.9	124.3	1.4
66561	DENISON5	161	66582	DENISN 8	69	1	50	50	63	66561 DENISON5 161 - 66582 DENISN 8 69 ckt 2	0.00409	122.0	123.3	1.3

3.3.3 Impact of GI-0108 Project on Facility Loadings – Summary

The addition of GI-0108 produced new overloads in the following facilities, under N-1 conditions:

- Madliaj – Madevil 69 kV, for the outage of Wilmarth – LGS 345 kV (106.6%). However, this overload can be resolved with the tripping of LGS plant upon the occurrence of the above contingency

- Lime Ck – Emeryn 161 kV, for the outage of Emeryn-Floyd 161 kV line (102%)

- Union Tap – Butler 161 kV, for the loss of Emeryn-Floyd 161 kV (102%)

- 345/115 kV transformer at Eden Prairie station, for the outage of the parallel transformer (103.8%). However, if the emergency rating for this transformer (582 MVA) is considered, the loading under this contingency condition translates to less than 100% loading.

- Eden Prairie – Edina 115 kV, for the multiple outage,'EDP-WSG/WSG7' (107.8% based on Rate A value of 318 MVA). However, if the emergency rating for this line is considered (349 MVA), the loading under this contingency condition translates to less than 100% loading.

Several other facilities had pre-existing overloads under various contingency conditions, which were only marginally increased after the addition of GI-0108 project, as shown in Table 3.7.

Table 3.7: Facility Overloads Summary (Buffalo Ridge Region) After the Addition of GI-0108

LIMITING ELEMENT							RATING (MVA)			CONTINGENCY	LOADING BASED ON RATEA (%)		SYSTEM CONDITION
LFNUM	LFNAM	LFKV	LTNUM	LTNAM	LTKV	CKT	RATEA	RATEB	RATEC		WITHOUT GI-0108	WITH GI-0108	
ALTW													
34020	HAZL S 5	161	34135	DUNDEE 5	161	1	167.0	167.0	167.0	34018 HAZLTON 3 345 - 34093 ARNOLD3 345 ckt 1	100.9	115.6	OFF PEAK
34251	MADLIAJ8	69	34267	HANSKAT8	69	1	27.0	27.0	27.0	60108 WILMART3 345 - 60331 LKFLDXL3 345 ckt 1	145.8	159.4 (127.2)	PEAK
34251	MADLIAJ8	69	60701	MADELVL8	69	1	36.0	39.6	36.0	60108 WILMART3 345 - 60331 LKFLDXL3 345 ckt 1	96.5	106.6	PEAK
34641	KELLERT8	69	34643	GRRIVER8	69	1	12.0	12.0	12.0	34587 MURRAY 8 69 - 34658 OSCEOLA8 69 ckt 1	145.9	149.6	OFF PEAK
34015	LIME CK5	161	34016	EMERYN	161	1	193.0	193.0	193.0	34016 EMERYN 161 - 64252 FLOYD 5 161 ckt 1	98.5	102.0	PEAK
34016	EMERYN	161	34082	EMERYS 5	161	1	202.0	202.0	202.0	34001 POWERIA 161 - 34016 EMERYN 161 ckt 1	167.5	170.8	OFF PEAK
34643	GRRIVER8	69	34644	ELLSTNR8	69	1	12.0	12.0	12.0	34585 LORIMRR8 69 - 34588 SLAKEN 8 69 ckt 1	138.6	141.6	OFF PEAK
34010	HAYWARD5	161	34013	WNBAGOS5	161	1	167.0	167.0	167.0	PRI-BYN/RRK3	115.4	118.4	OFF PEAK
34137	TRIBOJI5	161	66563	SPENCER5	161	1	195.0	195.0	195.0	60108 WILMART3 345 - 60331 LKFLDXL3 345 ckt 1	105.4	108.4 (76.8)	OFF PEAK
34136	TRIBOJI8	69	35003	CLIPPER3	69	1	58.0	58.0	58.0	34004 ELK 5 161 - 34005 HRN LK 5 161 ckt 1	110.6	112.8	OFF PEAK
34590	GRDRVRE8	69	34643	GRRIVER8	69	1	12.0	12.0	12.0	34650 ARISTAP8 69 - 34653 CRESTN8 69 ckt 1	128.6	130.5	OFF PEAK
34014	ADAMS 5	161	61984	AUSTIN 5	161	1	223.0	223.0	223.0	63032 PL VLLY3 345 - 63070 PL VLLY5 161 ckt 1	113.1	114.6	PEAK
34530	WELSBRGY	115	63734	WELSBRG8	69	1	40.0	40.0	40.0	34068 M-TOWN 5 161 - 34079 TRAER 5 161 ckt 1	99.9	101.2	PEAK
34001	POWERIA	161	34016	EMERYN	161	1	300.0	300.0	300.0	34082 EMERYS 5 161 - 63730 HAMPTON5 161 ckt 1	124.9	126.0	OFF PEAK
GRE													
62429	PNNCKTP8	69	66298	GRANITF8	69	1	24.3	24.3	26.7	63050 WILLMAR4 230 - 66550 GRANITF4 230 ckt 1	124.9	131.8	PEAK
62427	WILLMAR8	69	62429	PNNCKTP8	69	1	24.3	24.3	26.7	63050 WILLMAR4 230 - 66550 GRANITF4 230 ckt 1	117.0	123.9	PEAK
63054	PANTHER4	230	60742	PANTHER8	69	1	70.0	70.0	87.5	62980 MCLEOD 4 230 - 63054 PANTHER4 230 ckt 1	117.4	123.7	OFF PEAK
60710	FARM TP8	69	62839	BGFSHTP8	69	1	19.3	19.3	21.3	60760 PAYNES 8 69 - 62824 ZION TP8 69 ckt 1	192.0	193.2	PEAK
MEC													
64256	UNIONTP5	161	64285	BUTLER 5	161	1	181.0	181.0	181.0	34016 EMERYN 161 - 64252 FLOYD 5 161 ckt 1	98.5	102.0	OFF PEAK
64239	FRANKLN5	161	64285	BUTLER 5	161	1	181.0	181.0	181.0	34016 EMERYN 161 - 64252 FLOYD 5 161 ckt 1	101.6	105.0	OFF PEAK
MP													
61653	RIVERTN7	115	62180	RIVTON 8	69	1	56.0	56.0	70.0	62479 BALLCLB8 69 - 62487 DEER RV8 69 ckt 1	108.3	109.5	PEAK
XCEL													
60208	EDINA 7	115	60263	EDEN PR7	115	1	318.0	318.0	349.0	EDP-WSG/WSG7	97.2	107.8	PEAK
60826	TRAVRSE8	69	62323	PNLPNTP8	69	1	47.0	47.0	51.7	X0982-0898P1	107.4	117.2	PEAK
60650	WILMART8	69	62336	JHNSNTP8	69	1	66.0	66.0	72.6	X0982-0898P1	109.9	117.0	PEAK

LIMITING ELEMENT							RATING (MVA)			CONTINGENCY	LOADING BASED ON RATEA (%)		SYSTEM CONDITION
LFNUM	LFNAM	LFKV	LTNUM	LTNAM	LTKV	CKT	RATEA	RATEB	RATEC		WITHOUT GI-0108	WITH GI-0108	
60262	EDEN PR3	345	60263	EDEN PR7	115	1	448.0	448.0	582.0	60262 EDEN PR3 345 - 60263 EDEN PR7 115 ckt 2	97.7	103.8	PEAK
60145	FRANKLN7	115	60728	FRANKLN8	69	1	47.0	47.0	61.0	60145 FRANKLN7 115 - 60728 FRANKLN8 69 ckt 2	101.5	105.7	PEAK
60145	FRANKLN7	115	60728	FRANKLN8	69	2	47.0	47.0	61.0	60145 FRANKLN7 115 - 60728 FRANKLN8 69 ckt 1	101.5	105.7	PEAK
60105	PR ISLD3	345	60236	REDROCK3	345	2	568.0	568.0	625.0	PRI-BLL/RRK3	132.0	135.9	PEAK
60718	BIRDISL8	69	60742	PANTHER8	69	1	68.0	68.0	68.0	60148 MINVALY7 115 - 61954 REDFLST7 115 ckt P1	103.4	106.4	OFF PEAK
60103	CANNFLS5	161	63071	SPRNGCK5	161	1	90.0	90.0	99.0	PRI-RRK/RRK3	110.5	113.4	PEAK
60156	PYNSVIL7	115	60760	PAYNES 8	69	P1	47.0	47.0	54.0	60156 PYNSVIL7 115 - 60760 PAYNES 8 69 ckt P2	119.7	122.0	PEAK
60156	PYNSVIL7	115	60760	PAYNES 8	69	P2	47.0	47.0	54.0	60156 PYNSVIL7 115 - 60760 PAYNES 8 69 ckt P1	119.7	122.0	PEAK
60788	VALLYTP8	69	60789	CIRCLTP8	69	1	48.0	48.0	52.8	60787 NOFIELD8 69 - 60801 CNFLSTR8 69 ckt 1	101.6	103.3	PEAK
60789	CIRCLTP8	69	60790	FAIRPRK8	69	1	48.0	48.0	52.8	60787 NOFIELD8 69 - 60801 CNFLSTR8 69 ckt 1	113.9	115.5	PEAK
60790	FAIRPRK8	69	60791	FARIBLT8	69	1	48.0	48.0	52.8	60790 FAIRPRK8 69 - 60792 WFARBLT8 69 ckt 1	112.0	113.6	PEAK
60110	WILMART7	115	60650	WILMART8	69	1	70.0	70.0	91.0	60110 WILMART7 115 - 60650 WILMART8 69 ckt 2	109.0	110.4	PEAK
60110	WILMART7	115	60650	WILMART8	69	3	70.0	70.0	91.0	60110 WILMART7 115 - 60650 WILMART8 69 ckt 2	109.0	110.4	PEAK
60110	WILMART7	115	60650	WILMART8	69	2	70.0	70.0	91.0	60110 WILMART7 115 - 60650 WILMART8 69 ckt 3	109.4	110.8	PEAK
60153	MNTCELO7	115	60269	HASSAN 7	115	1	140.0	140.0	154.0	009 2	106.4	107.6	PEAK
OTP													
63223	HOOT LK7	115	63231	FERGSFL7	115	1	96.0	96.0	105.0	63051 HENNING4 230 - 63331 FERGSFL4 230 ckt 1	101.7	105.2	OFF PEAK
WAPA													
66574	SIOUXCY8	69	63890	PLYMOTH8	69	1	45.0	64.0	50.0	66566 SIOUXCY5 161 - 63889 PLYMOTH5 161 ckt 1	108.4	113.9	OFF PEAK
67105	LELANDO3	345	67201	LELND1TY	345	1	250.0	250.0	300.0	67105 LELANDO3 345 - 67202 LELND2TY 345 ckt 1	107.5	112.6	PEAK
67201	LELND1TY	345	67106	LELANDO4	230	1	250.0	250.0	300.0	67105 LELANDO3 345 - 67202 LELND2TY 345 ckt 1	107.5	112.6	PEAK
66551	GRANITF7	115	66298	GRANITF8	69	1	42.0	42.0	52.0	63050 WILLMAR4 230 - 66550 GRANITF4 230 ckt 1	107.5	111.6	PEAK
66203	FARGO 8	69	67000	MAPLE R8	69	1	41.0	41.0	45.0	60133 SHEYNNE4 230 - 66435 FARGO 4 230 ckt 1	155.4	158.8	PEAK
66566	SIOUXCY5	161	66574	SIOUXCY8	69	1	75.0	75.0	94.0	66566 SIOUXCY5 161 - 63889 PLYMOTH5 161 ckt 1	103.2	105.8	OFF PEAK
66582	DENISN 8	69	66583	DENISON8	69	1	100.0	100.0	125.0	34047 ANTA TP5 161 - 66561 DENISON5 161 ckt 1	103.8	106.1	OFF PEAK
66561	DENISON5	161	66582	DENISN 8	69	1	50.0	50.0	63.0	66561 DENISON5 161 - 66582 DENISN 8 69 ckt 2	142.7	143.9	PEAK
66561	DENISON5	161	66582	DENISN 8	69	2	50.0	50.0	63.0	66561 DENISON5 161 - 66582 DENISN 8 69 ckt 1	143.8	145.0	PEAK
66562	EAGLE 4	230	66579	EAGLE 8	69	1	60.0	60.0	75.0	66562 EAGLE 4 230 - 66579 EAGLE 8 69 ckt 2	141.5	142.7	PEAK

3.4 Identification of Interconnection Related Facility Overloads

Thermal overload tables developed in Sections 3.2 and 3.3 were screened to identify any facility overloads associated with the interconnection of the proposed project. Only those facilities that are in the vicinity of the proposed project have been considered. New and pre-existing overloads on these facilities, if any, may limit the ability of the project to inject power to the grid. The overload criterion is 100% of Rate A.

The results of the screening indicate that there are no interconnection related facility overloads associated with the interconnection of the proposed project.

3.5 Identification of Transmission Service Related Facility Overloads

Thermal overload tables developed in Sections 3.2 and 3.3 were screened to identify facility overloads that are associated with transmission service (i.e., delivery of power) out of the proposed project. It must be noted that these overloads are not associated with the interconnection of the proposed project. The screening was performed to give additional information to the transmission owners and the generation developer.

The following criteria were used to identify facility overloads associated with the delivery of power from this generator:

1. All facility overloads that meet the following OTDF and PTDF criteria:

    a. For MISO member transmission owners (namely ALTW, MP, OTP, and XCEL), the TDF cutoff for OTDF and PTDF was 3% and 5% respectively.

    b. For non-MISO member transmission owners (GRE, MEC, and WAPA), the TDF cutoff for both OTDF and PTDF was 2%.

2. For system intact conditions as well as first contingency conditions, all facilities that overload above 100% of Rate A due to the addition of the proposed project are listed. These facilities were not overloaded without this project. Pre-existing overloads are treated as known problems and have also been listed in the table.

The results of the screening are presented in Table 3.8.

Table 3.8: List of Overloaded Facilities Associated with the Delivery of Power from the Proposed Project

LIMITING ELEMENT								CONTINGENCY	TDF	LOADING (%)		LOADING CHANGE (%)	SYSTEM CONDITION
LFNUM	LFNAM	LFKV	LTNUM	LTNAM	LTKV	CKT	RATEA			BASE	GI-0108		
ALTW													
34020	HAZL	161	34135	DUNDEE	161	1	167.0	BASECASE	0.08900	100.3	114.8	14.5	OFF-PEAK
34004	ELK 5	161	34005	HRN LK 5	161	1	112.0	34006 LAKEFLD3 345 - 60286 NOBLES 3 345 ckt C1	0.05343	131.9	140.6	8.7	OFF-PEAK
34015	LIME CK5	161	34016	EMERYN	161	1	193.0	34016 EMERYN 161 - 64252 FLOYD 5 161 ckt 1	0.03523	98.5	102.0	3.5	PEAK
34016	EMERYN	161	34082	EMERYS 5	161	1	202.0	34001 POWERIA 161 - 34016 EMERYN 161 ckt 1	0.03832	167.5	170.8	3.3	OFF-PEAK
34001	POWERIA	161	34016	EMERYN	161	1	300.0	60108 WILMART3 345 - 60331 LKFLDXL3 345 ckt 1	0.03427	115.5	118.0	2.5	PEAK
GRE													
63054	PANTHER4	230	60742	PANTHER8	69	1	70.0	62980 MCLEOD 4 230 - 63054 PANTHER4 230 ckt 1	0.02692	117.4	123.7	6.3	OFF-PEAK
62925	DICKNSN7	115	62667	ST BONI7	115	1	71.4	PKL-DKN/ECK3	0.02138	223.2	228.9	5.7	PEAK
XCEL													
60208	EDINA 7	115	60263	EDEN PR7	115	1	318.0	EDP-WSG/WSG7	0.19074	97.2	107.8	10.6	PEAK
60262	EDEN PR3	345	60263	EDEN PR7	115	1	448.0	60262 EDEN PR3 345 - 60263 EDEN PR7 115 ckt 2	0.15408	97.7	103.8	6.1	PEAK
60148	MINVALY7	115	60171	LYON CO7	115	1	120.0	60170 MARSHAL7 115 - 60171 LYON CO7 115 ckt 1	0.03681	99.6	105.6	6.0	PEAK
60105	PR ISLD3	345	60236	REDROCK3	345	2	568.0	PRI-BLL/RRK3	0.11054	132.0	135.9	3.9	PEAK
60199	CHIS CO3	345	60196	CHI 7	115	1	448.0	CHI-KOL/ASK3	0.05210	148.5	149.9	1.4	OFF-PEAK
WAPA													
67201	LELND1TY	345	67106	LELANDO4	230	1	250.0	67105 LELANDO3 345 - 67202 LELND2TY 345 ckt 1	0.06125	107.5	112.6	5.1	PEAK

Notes:

1. The facility overloads in this table are sensitive to generation dispatch, other system transactions, and outage of network facilities. These results in the table are based on the assumptions in this study. If the assumptions are changed or modified, the results may be different. Depending upon the system conditions and assumptions, new facilities may appear as thermal limiters in addition to the facilities listed in this table.

2. The Transmission Reserve Margin (TRM) and Capacity Benefit Margin (CBM) were not factored into this analysis.

3. Any facilities where the change in flow between base case and contingency conditions is less than 1 MW were excluded.

4. Facilities with pre-existing overloads that have a loading change of less than 1% are not listed.

3.6 N-2 Contingency Analysis

N-2 contingency analysis was performed on the powerflow cases described in Section 3.1.

For the purposes of this analysis, a subsystem was defined consisting of buses (100 kV and above) in the vicinity of the interconnection points of the Group 1 units. Buses up to four levels away from each of the interconnection points of the Group 1 units were included in this subsystem. Engineering judgment was used to determine whether any other buses need to be included in or removed from this subsystem. Table C.1 in Appendix C contains a list of buses comprising the subsystem. The MUST program was then used to generate all combinations of N-2 contingencies (i.e., two simultaneous single contingencies) for all branches within the subsystem and tie-lines out of the subsystem. All facilities rated 69 kV and above were monitored in WAPA, ALTW, GRE, OTP and XCEL (except XCEL Wisconsin) and all facilities 100 kV and above were monitored in the MEC and MP areas.

DC contingency analysis was performed using the MUST program and post-contingency power flows in excess of 90% of the Rate A data were recorded. As in the N-1 analysis, the criteria used to flag thermal overloads is 100% of the Rate A data. Post-contingency overloads with and without the GI-0108 project were tabulated and compared.

Tables 3.9 and 3.10 list newly overloaded facilities and associated N-2 contingencies causing the overloads, along with a comparison of the facility loadings in percentage with and without the GI-0108 unit. These tables list only the most limiting contingency (one which causes highest overload with the proposed project) and the corresponding loading with and without the proposed project. Facilities that have pre-existing overloads are not listed. Also facilities that have a loading change of less than 1% are not listed in these tables.

As shown in Tables 3.9 and 3.10, the proposed project significantly impacts the flow on the White – Brooking 115 kV line following simultaneous outages of the two 345 kV lines connected to White (i.e., White – Split Rock and White – Watertown). The change in loading with and without the proposed project is approximately 72%. Based on information provided by Western, operating restrictions for the new generating unit will be needed during prior outage conditions to maintain acceptable area facility loadings and voltages. These operating restrictions will be identified during the operating studies, if the transmission customer proceeds with the interconnection request.

Table 3.9: N-2 Contingency Analysis Results (Summer Peak)

LIMITING ELEMENT	RATE A (MVA)	CONTINGENCY	LOADING (%)		LOADING CHANGE (%)
			WITHOUT GI-0108	WITH GI-0108	
66504 BROOKNG7 115 66538 WHITE 7 115 1	160.0	SPLTRTA3-WHITE 3 + WATERTN3-WHITE 3	50.9	123.6	72.7
60145 FRANKLN7 115 60728 FRANKLN869.0 1	47.0	MINVALY7-MINVALT4 + MNVLTAP4-GRANITF4	91.5	100.0	8.5
60145 FRANKLN7 115 60728 FRANKLN869.0 2	47.0	MINVALY7-MINVALT4 + MNVLTAP4-GRANITF4	91.5	100.0	8.5
34300 MONTGMY869.0 34301 NEWPRAG869.0 1	36.0	LAKEFLD3-LKFLDXL3 + WILMART3-BLUE LK3	96.2	102.8	6.6
34248 TRUMANM869.0 34249 TRUMAN 869.0 1	47.0	WILMART3-LKFLDXL3 + WILMART5-WILMART7	99.1	104.4	5.3
34248 TRUMANM869.0 34280 TRUMANT869.0 1	47.0	WILMART3-LKFLDXL3 + WILMART5-WILMART7	99.1	104.4	5.3
60171 LYON CO7 115 60903 LYON CO869.0 1	70.0	MINVALY7-LYON CO7 + MARSHAL7-LYON CO7	96.1	100.4	4.3
60170 MARSHAL7 115 60171 LYON CO7 115 1	162.0	MINVALY7-LYON CO7 + CHANRMB7-FENTON 7	98.4	101.9	3.5
60788 VALLYTP869.0 60789 CIRCLTP869.0 1	48.0	LAKEFLD3-LKFLDXL3 + WILMART3-BLUE LK3	99.6	102.5	2.9
66515 HURON 7 115 67403 REDFLD 7 115 1	60.0	GROTON 7-REDFELD7 + GROTON 7-GROTONTY	98.2	100.4	2.2

Table 3.10: N-2 Contingency Analysis Results (Summer Off-Peak)

LIMITING ELEMENT	RATE A (MVA)	CONTINGENCY	LOADING (%)		LOADING CHANGE (%)
			WITHOUT GI-0108	WITH GI-0108	
66504 BROOKNG7 115 66538 WHITE 7 115 1	160.0	SPLTRTA3-WHITE 3 + WATERTN3-WHITE 3	39.0	109.3	70.3
60148 MINVALY7 115 60149 MINVALT4 230 C1	187.0	MINVALY7-REDFLST7 + MNVLTAP4-GRANITF4	95.2	104.9	9.7
34007 LAKEFLD5 161 34008 FOX LK 5 161 1	160.0	LAKEFLD5-FOX LK 5 + WILMART3-LKFLDXL3	98.7	108.0	9.3
62425 WILLMAR7 115 62427 WILLMAR869.0 1	84.0	MINVALY7-REDFLST7 + WILLMAR4-GRANITF4	96.8	100.7	3.9
66528 WOONSKT7 115 67123 STORLA 7 115 1	80.0	FTTHOMP4-FTRANDL4 + FTTHOMP4-STORLA 4	98.9	100.5	1.6
63908 SAC 5 161 64244 SAC GEN 161 1	136.0	TRIBOJI5-SPENCER5 + WILMART3-LKFLDXL3	99.6	101.1	1.5

3.7 Transfer Capability Analysis

The objective of this analysis is to determine whether the addition of the proposed GI-0108 project would adversely impact transfer capabilities in MAPP and neighboring transmission systems.

3.7.1 Impact of GI-0108 Project on FCITC for Specific Transfers

Of the several interfaces and transfer paths in the MAPP region, two transfer paths could be impacted by the power injection at Buffalo Ridge. The first of these is the transfer path from North Dakota Coal fields to MAIN, which includes a key interface, namely the NDEX. The second is the path from Buffalo Ridge to Twin Cities. The Buffalo Ridge – Twin Cities transfer path has been studied in detail under the contingency analysis section of steady state analysis. Therefore analysis in this section will be limited to the impact assessment of GI-0108 generation on the North Dakota Coal fields – MAIN transfer path. The MAIN area was selected as the sink to reflect potential transfers that stress the northern MAPP exports. The NDEX transfer capability is currently limited to 1950 MW by stability criteria. Any constraint on this interface may impose limitations on the transfer of less expensive power from North Dakota to the demand centers in MAIN and Twin Cities. This study is directed towards the determination of any limitations to NDEX transfers that would be more limiting than such stability constraints or the pre-existing thermal limitations, if any, after the addition of GI-0108 generation. The definition of NDEX interface is provided in Table 3.11.

Table 3.11: Definition of NDEX Interface

Facilities Composing NDEX	kV Level
Leland Olds – Ft. Thompson	345
Leland Olds – Groton	345
Antelope Valley – Huron	345
Bigstone – Blair	230
Morris – Granite Falls	230
Audubon – Hubbard	230
Sully Butte – Oahe	230
Inman – Wing River	230
Bison – Maurine	230
Laporte – Badoura	115
Alexander – Douglas Co	115
Ellendale – Aberdeen Jct.	115
Edgeley – Ordway	115
Forman - Summit	115
Canby – Granite Falls	115
Kerkhovan – Kerkovan Tap	115
Drayton – Leteler	230
Rugby – Glenboro	230

Using the MUST software, the NDEX interface power transfer was monitored for transfers from the North Dakota Coalfields generation to the power flow swing bus in the MAIN area. The analysis was performed on the 2007 Summer Off-Peak High-Transfer power flow models with and without the GI-0108 project. The NDEX transfer level was set at a value corresponding to the stability limit (1950 MW). This investigation focused on transmission facilities that are sensitive to NDEX transfer levels and experienced an increase in power flow due to the new generation.

Both pre and post-contingency conditions were compared against the normal rating (Rate A). In order to eliminate the limiting facilities, which are relatively insensitive to the study transfer, a cutoff TDF threshold of 2% was applied, and only the five most limiting contingencies for a given limiting element were listed. Appendix F provides the FCITC tables for the cases without and with the proposed GI-0108 generation, respectively. A comparison of the results is given in Table 3.12. The post contingency power flow magnitudes and the TDF values of limiting elements were compared in the cases with and without the GI-0108 in order to determine any impacts on the NDEX transfer capability. The last column of this table shows the percentage power flow change in the limiting facility. The results in Table 3.12 show both the pre-existing limiters (facilities), which are incrementally affected by the addition of GI-0108, as well as new limitations imposed by the addition of GI-0108. Most of these facilities have been already identified as limiting facilities under contingency analysis. However, some not identified during contingency analysis may also show up as limiting elements for this transfer path.

The specified contingency '885' involving the outage of two 161 kV lines from Seneca (in DPC) causes an increase of about 17% MW flow in Hazl – Dundee 161 kV. This may show as a limitation for all NDEX values. This is a pre-existing condition, that is made worse by the addition of GI-0108 (due to increased flow towards Twin Cities).

The loss of Wilmarth – LGS 345 kV line causes overload in Triboji – Spencer 161 kV line. This is a pre-existing condition, i.e the constraint in Triboji – Spencer line exists even before the addition of GI-0108, as shown by the NDEX level and MW flows in this line.

However, the above overload can be mitigated upon tripping the LGS units for the outage of Wilmarth – LGS line (refer MAPP guide for the operation of LGS). The subsequent occurrences of overloads in Triboji – Spencer line was indicated for the outage of overlying 345 kV circuit, namely Lakefield – Raun and Split Rock-White line.

Overloads were also observed on Roseau – Dorsey 500 kV line for system intact as well as contingency conditions. The increased transfer from the Buffalo Ridge area to the Twin Cities takes the path of least impedance, namely the Split Rock-Lakefield-Blue Lake 345 kV line, the Minnesota Valley – Black Dog 230 kV line and the underlying low voltage systems. However, a fraction of the increased power transfer also flows North of Buffalo Ridge into Manitoba Hydro area and flows back (loop flow) into the Twin Cities through the 500 kV line from Dorsey to Forbes. It should be recalled that MHEX interface flow is being held at a constant value of about 2175 MW in both the cases, with and without GI-0108 project. But, the distribution of flow in the tie lines constituting the MHEX interface (Roseau – Dorsey is one of the tie lines in the MH interface) is altered due to the loop flow, resulting in an increase in loading on Dorsey – Roseau 500 kV lines. The Dorsey-Roseau 500 kV line is limited by equipment at Dorsey and the series capacitors at Roseau.

The remaining limitations listed in Table 3.12 are pre-existing and GI-0108 has only marginal impacts, as shown by the small increases in the respective facility overloads. The complete MUST output for the Transfer Capability Analysis is provided in Appendix F.

Table 3.12: Comparison of NDEX Levels as encountered under Summer Off-Peak Conditions

LIMITING FACILITY						RATING (MVA)				WITH GI-0108			WITHOUT GI-0108			% FLOW CHG
LFNUM	LFNAM	LFKV	LTNUM	LTNAM	LTKV	A	B	C	CONTINGENCY	TDF	NDEX (MW)	FLOW (MW)	TDF	NDEX (MW)	FLOW (MW)	BASED ON RATEA
34020	HAZL S 5	161	34135	DUNDEE 5	161	167	167	167	C:885	0.028	-247.9	228.6	0.031	871	200.6	16.8
34020	HAZL S 5	161	34135	DUNDEE 5	161	167	167	167	BASECASE	0.023	750.4	194.6	0.026	1791.5	171.2	14
34137	TRIBOJI5	161	66563	SPENCER5	161	195	195	195	60108 WILMART3 345 - 60331 LKFLDXL3 345 ckt 1	0.0231	1346.7	209	0.023	1570.3	203.8	2.67
60173	ROSEAUN2	500	67564	DORSEY 2	500	1732	2094	1732	60002 SHERC33G 26 - 60160 SHERCO 3 345 ckt 1	-0.132	1597.9	-1778.5	-0.132	1696	-1765.5	0.75
34016	EMERYN	161	64252	FLOYD 5	161	217	217	217	34018 HAZLTON3 345 - 60102 ADAMS 3 345 ckt 1	0.0273	1612	226.2	0.027	1710.1	223.6	1.2
60173	ROSEAUN2	500	67564	DORSEY 2	500	1732	2094	1732	60108 WILMART3 345 - 60331 LKFLDXL3 345 ckt 1	-0.132	1612.3	-1776.6	-0.132	1728.5	-1761.2	0.89
60173	ROSEAUN2	500	67564	DORSEY 2	500	1732	2094	1732	66506 FTTHOMP3 345 - 67105 LELANDO3 345 ckt 1	-0.146	1621.1	-1779.9	-0.146	1709.3	-1767.1	0.74
60173	ROSEAUN2	500	67564	DORSEY 2	500	1732	2094	1732	60006 KING 31G 20 - 60186 AS KING3 345 ckt 1	-0.132	1630.7	-1774.2	-0.132	1728.6	-1761.2	0.75
63223	HOOT LK7	115	63231	FERGSFL7	115	96	96	105	63051 HENNING4 230 - 63331 FERGSFL4 230 ckt 1	-0.021	1718.8	-101	-0.022	1898.8	-97.1	4.06
64239	FRANKLN5	161	64285	BUTLER 5	161	181	181	181	34018 HAZLTON3 345 - 60102 ADAMS 3 345 ckt 1	0.024	1772.6	185.3	0.024			NEW
64239	FRANKLN5	161	64285	BUTLER 5	161	181	181	181	C:825	0.0239	1802.1	184.5	0.024			NEW
63190	MAPLER2Y	345	66754	MAPLE R4	230	336	336	420	63189 MAPLER1Y 345 - 66792 MAPLE R3 345 ckt 1	0.1207	1821.6	351.5	0.121	1847	348.4	0.92
63189	MAPLER1Y	345	66754	MAPLE R4	230	336	336	420	63190 MAPLER2Y 345 - 66754 MAPLE R4 230 ckt 1	0.1207	1822.6	351.4	0.121	1848.1	348.2	0.95
60173	ROSEAUN2	500	67564	DORSEY 2	500	1732	2094	1732	BASECASE	-0.132	1823.3	-1748.7	-0.132	1920.6	-1735.8	0.74
63223	HOOT LK7	115	63231	FERGSFL7	115	96	96	105	63051 HENNING4 230 - 63052 INMAN 4 230 ckt 1	-0.021	1846.6	-98.2	-0.022			NEW
34016	EMERYN	161	64252	FLOYD 5	161	217	217	217	C:825	0.026	1856.2	219.4	0.026			NEW
34137	TRIBOJI5	161	66563	SPENCER5	161	195	195	195	60131 SPLTRTB3 345 - 66564 SIOUXCY3 345 ckt 1	0.0313	1880.6	197.2				NEW
34129	LIBERTY5	161	34135	DUNDEE 5	161	167	167	167	C:885	-0.024	1882.9	-168.6				NEW
34137	TRIBOJI5	161	66563	SPENCER5	161	195	195	195	34006 LAKEFLD3 345 - 63875 RAUN 3 345 ckt 1	0.0311	1903	196.5	0.031	1952.6	194.9	0.82
34137	TRIBOJI5	161	66563	SPENCER5	161	195	195	195	C:PRI-BYN/RRK3	0.027	1904.7	196.2	0.027	1963.9	194.6	0.82
64256	UNIONTP5	161	64285	BUTLER 5	161	181	181	181	34016 EMERYN 161 - 64252 FLOYD 5 161 ckt 1	-0.017	1906.4	-181.8	-0.018	2228.5	-176	3.2

Table 3.12 includes the following information:

- Limiting facility, including normal (Rate A), emergency (Rate C) and conductor ratings (Rate B).
- Corresponding contingency
- Transmission distribution factor with respect to NDEX transfer levels (columns labeled “TDF”)
- North Dakota Export levels beyond which the limiting facility becomes violated (columns labeled “NDEX”)
- Contingency power flow at the NDEX level of 1950MW (columns labeled “FLOW”)
- Increase in the contingency power flow due to GI-0108 (column labeled “% FLOW CHANGE”)

3.7.2 Constrained Interface Analysis

The purpose of this task was to determine if the GI-0108 unit would have an impact upon the regional constrained interfaces (PDTF and OTDF interfaces) of the MAPP system. The analysis was done using the NMORWG DFCALC IPLAN program on the 2007 Summer Peak power flow models with and without GI-0108.

Table 3.13 shows the interface flows in the cases without and with the GI-0108 unit. As can be seen from this table, GI-0108 had no significant impact[3] on the flows across the MAPP constrained interfaces (based on the computed impact as a percentage of 200 MW of injection from GI-0108) with the exception of the FTCAL_S interface (5.8% transfer increase). The DFCALC output is included in Appendix G.

[3] As per MAPP Design Review Subcommittee criteria (see MAPP DRS document entitled "*Steady-State Facility & Constrained Path Impact Determination Requirements & Screening Guidelines for Study Submissions"* approved July 18, 2003), the minimum PTDF threshold for MAPP PTDF Interfaces is 5% and the minimum MW impact threshold is 1 MW or 1% of the impacted Path TTC (whichever is smaller). PTDF Interfaces that have PTDFs >= 5% -and- have a MW impact >= minimum MW impact threshold are considered significantly impacted.

For OTDF Interfaces, the minimum OTDF threshold is 3% and the minimum impact threshold is 1 MW or 1% of the impacted Path TTC (whichever is smaller). OTDF Interfaces that have OTDFs >= 3% -and- have a MW impact >= minimum MW impact threshold are considered significantly impacted.

Table 3.13: Impact of GI-0108 Generation on the MAPP Constrained Interfaces

Interface	Without GI-0108 [MW]	With GI-0108 [MW]	%Change due to GI-0108 [MW]
PTDF INTERFACES			
COOPER_S	170.8	179.8	4.5
ECL-ARP	176.1	163.6	-6.3
FTCAL_S	332.7	344.4	5.8
GGS	1390.1	1391.7	0.8
GRIS_LNC	350.2	355.4	2.6
LACSTILACWGR	710.0	709.3	-0.4
LKM-WFB	-75.6	-81.3	-2.9
LORE_TRKYRVR	29.1	31.7	1.3
MHEX_N+	-1550.8	-1551.3	-0.3
MHEX_S+	1575.9	1576.5	0.3
MH_SPC_E+	-72.8	-73.0	-0.1
MH_SPC_W+	74.4	74.5	0.1
MNTZUMA_W	-116.5	-129.5	-6.5
MP_EXPORT	959.5	963.2	1.9
MWSI	212.7	171.9	-20.4
NDDC	-3.5	-3.5	0.0
NDEX	500.2	497.0	-1.6
NI_WUMS	417.8	423.5	2.9
PRI-BYN	36.6	8.3	-14.2
QUADCITY_W	530.0	525.1	-2.4
WNE_WKS	318.0	320.6	1.3
Y2DC	0.3	0.3	0
OTDF INTERFACES			
ARNOLD_VINTN	64	66.2	1.1
DAVNPRT_ECAL	146.9	148.3	0.7

4. TRANSIENT STABILITY ANALYSIS

The objectives of the transient stability studies were to evaluate the impact of the proposed 200MW wind farm at the White 345kV substation on the local area stability and on the regional stability constrained areas, such as North Dakota Export Interface (NDEX) and Minnesota - Wisconsin Stability Interface (MWSI).

Study results from the Coordinated Group #1 study were used to the extent possible in order to incorporate the details as well as utilize the readily available results. In that study, the combined impact of all the Group #1 projects on the regional stability performance was considered, as well as the stability of individual units with all Group #1 projects on-line.

4.1 Model Development

The studies were performed using the NMORWG Stability Package for PC, version 9/19/03. Power flow models and snapshots developed for the Group #1 studies were used as a basis for developing the cases for this study.

The GI-0108 wind farm was modeled as a conventional induction generator using the CIMTR3 stability model. The power flow and stability model parameters are provided in Appendix H and I, respectively.

4.2 Impact on Local Stability

The analysis of the impact of the proposed wind farm on local stability focused on the following two issues:

- To determine the stability of the proposed wind farm for disturbances near the point of interconnection.
- To determine if the proposed wind farm would adversely impact the stability of nearby generation facilities.

The fault scenarios considered for the local stability assessment are listed in Table 4.1.

Table 4.1: Definition of Local Disturbances for Simulation

FAULT	DESCRIPTION
ua3	4 cycle, 3-phase fault at White 345kV. Cleared by tripping the Split Rock - White 345kV line
ub3	4 cycle, 3-phase fault at White 345kV. Cleared by tripping the White 345/115kV transformer
uc3	4 cycle, 3-phase fault at White 345kV. Cleared by tripping the Watertown - White 345kV line

Figure 4.1 shows the following responses for disturbance ua3:

- Top left quadrant (with GI-0108): Terminal voltage responses at the GI-0108, Yankee and Buffalo Ridge wind farms.

- Top right quadrant (with GI-0108): Voltages at White 345kV, Yankee 115kV, Pipestone 115kV, Buffalo Ridge 115kV and Chanarambie 115kV.

- Bottom left quadrant (GI-0108 disconnected): Terminal voltage responses at the GI-0108, Yankee and Buffalo Ridge wind farms.

- Bottom right quadrant (GI-0108 disconnected): Voltages at White 345kV, Yankee 115kV, Pipestone 115kV, Buffalo Ridge 115kV and Chanarambie 115kV.

As can be seen from this figure, the GI-0108 wind farm was stable, and the impact on the stability of nearby generation facilities was negligible.

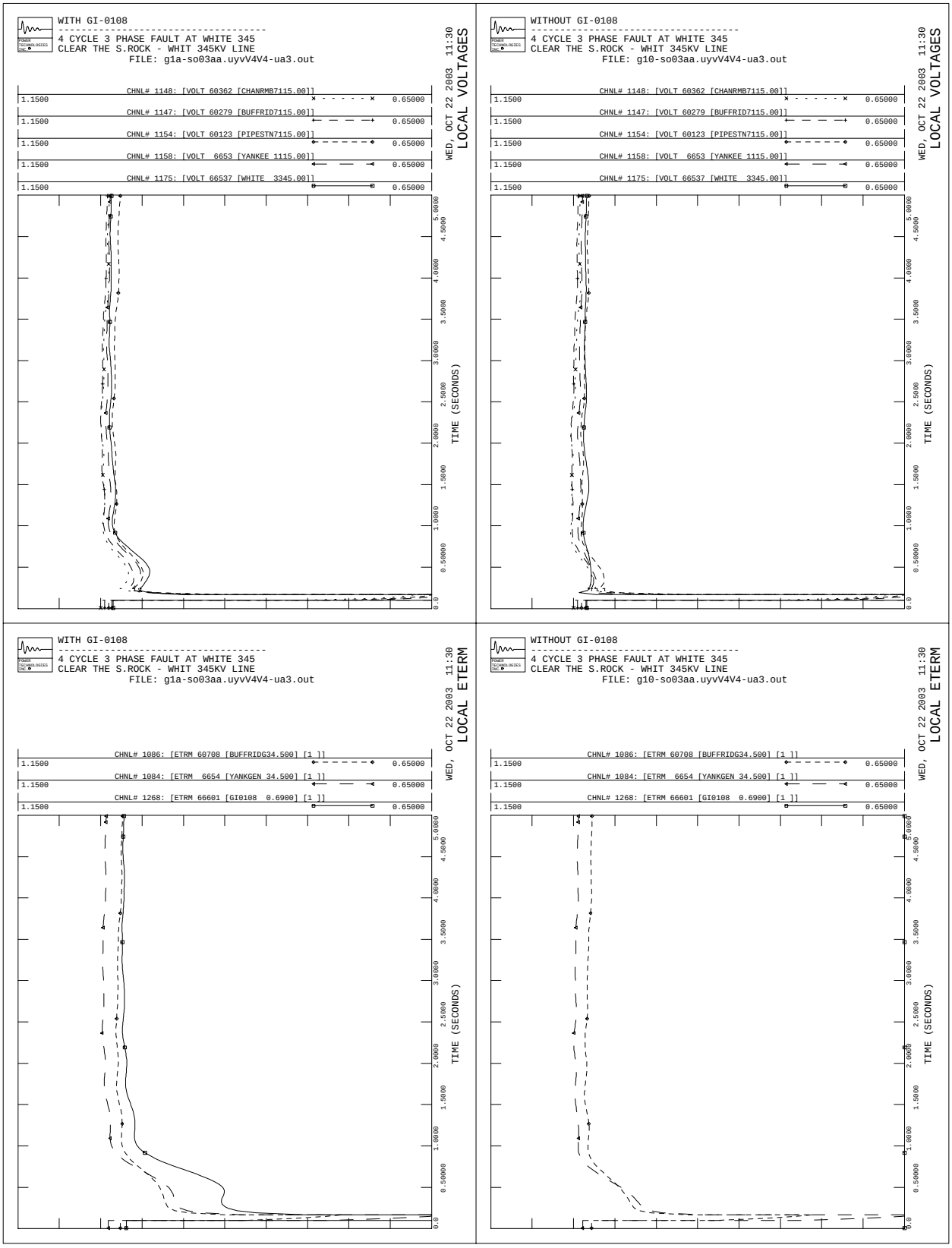

Figure 4.1: Disturbance UA3 with and without GI-0108

Figure 4.2 and Figure 4.3 show the responses to the ub3 and the uc3 disturbances, respectively. For both of these disturbances, the GI-0108 wind farm was stable and there was no significant impact on the stability of local facilities.

4.3 Impact on Regional Stability

The objective of the regional stability assessment was to determine if the proposed wind farm at the White 345kV substation would adversely impact the regional stability performance. Disturbances critical to the regional stability are listed in Table 4.2

Table 4.2: Disturbances Critical to Regional Stability

FAULT	DESCRIPTION
ag1	4 cycle slgf @ Leland Olds 345 on Ft. Thompson line, Leland Olds breaker 2692 stuck. Clear @ 11 cycles by tripping faulted line.
ei2	4 cycle 3 phase fault at Leland Olds 345. Clear the Leland Olds-Ft. Thompson 345 kV line.
mqs	Single line to ground fault with breaker failure at Sherco on unit #3. Trip Unit #3, Sherco - Benton 345kV line, and Benton 345/230kV transformer
mss	Single line to ground fault with breaker failure at Sherco on Coon Creek #1 line. Trip Sherco - Coon Creek 345 and Coon Creek 345/115kV.
mts	Single line to ground fault at Monticello with 8N6 stuck. Trip Monticello - Elm Creek 345 kV line
njz	Three-phase fault at Chisago County. Trip F601C. Cross trip D602F, use new 100% reduction init from Chisago.
nmz	Three-phase fault at Chisago County. Trip F601C. Cross trip D602F, use new 100% reduction init from Chisago. Leave SVS on MP system.
pcs	Single line to ground fault at King - Eau Claire line with breaker failure at King. Trip King - Eau Claire, Eau Claire - Arpin, and Ask - Chi line.
pct	Trip of Ask - Ecl - Arp without a fault. Trip King - Ecl, Ecl - Arp, and Ask - Chi line.
pys	Single line to ground fault with breaker fail at Prairie Island with XXX stuck.
pyt	Trip of Prairie Island - Byron 345kV line without a fault.

These disturbances were investigated for the cases with and without the Group #1 units in the stability assessment completed for the Group #1 study. The only regional stability concern that was noted in the Group #1 stability assessment was a deterioration of the voltage response at Panther, McLeod and Willmar for disturbances 'njz' and 'nmz' after the addition of all the Group #1 projects. Therefore, the regional stability assessment for the interconnection of the GI-0108 wind farm was limited to investigating these two disturbances. For the interconnection of the GI-0108 wind farm, results indicate that these two disturbances do not result in stability criteria violations. It is concluded that the proposed wind farm does not degrade the regional stability performance of the bulk power system.

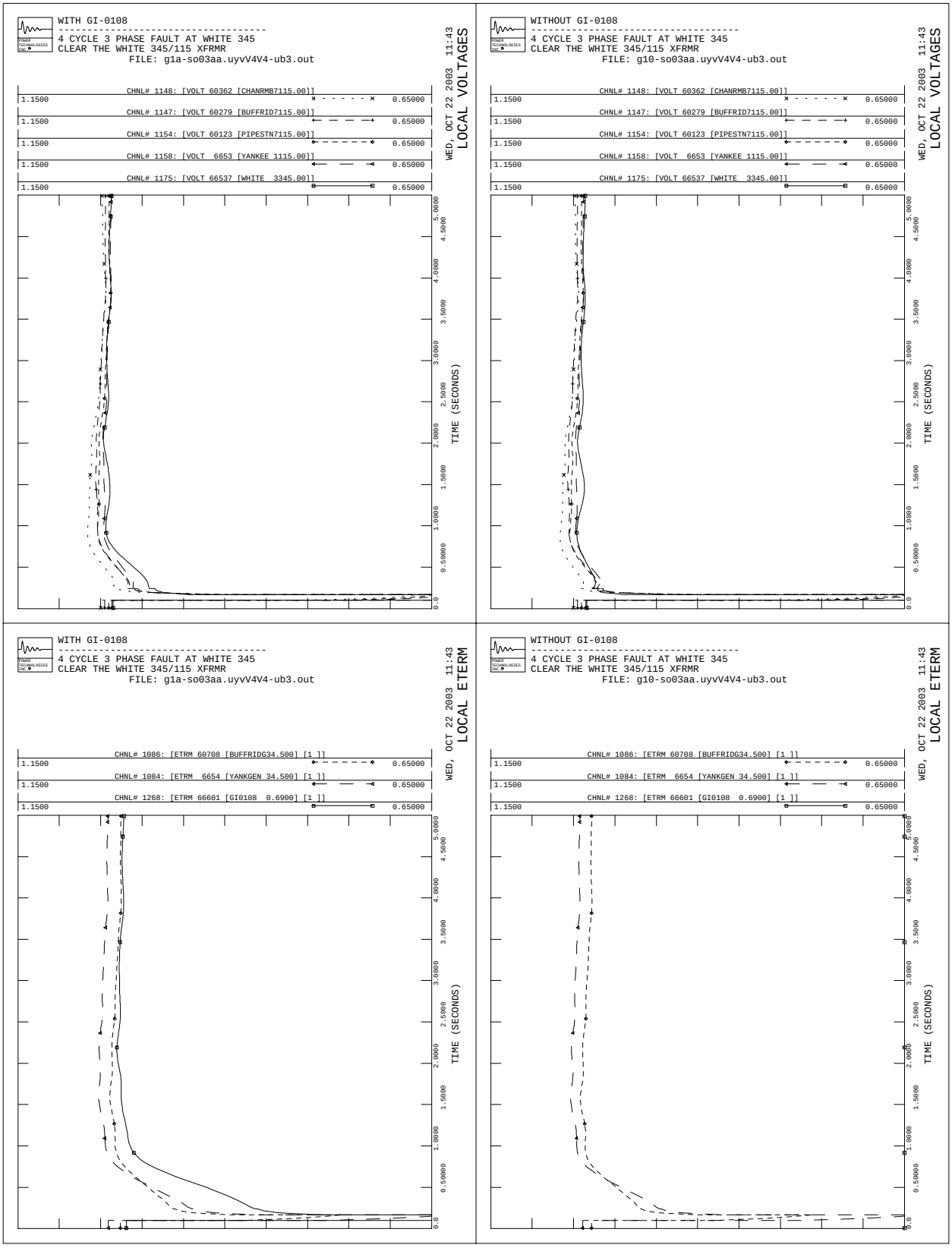

Figure 4.2: Disturbance UB3 with and without GI-0108

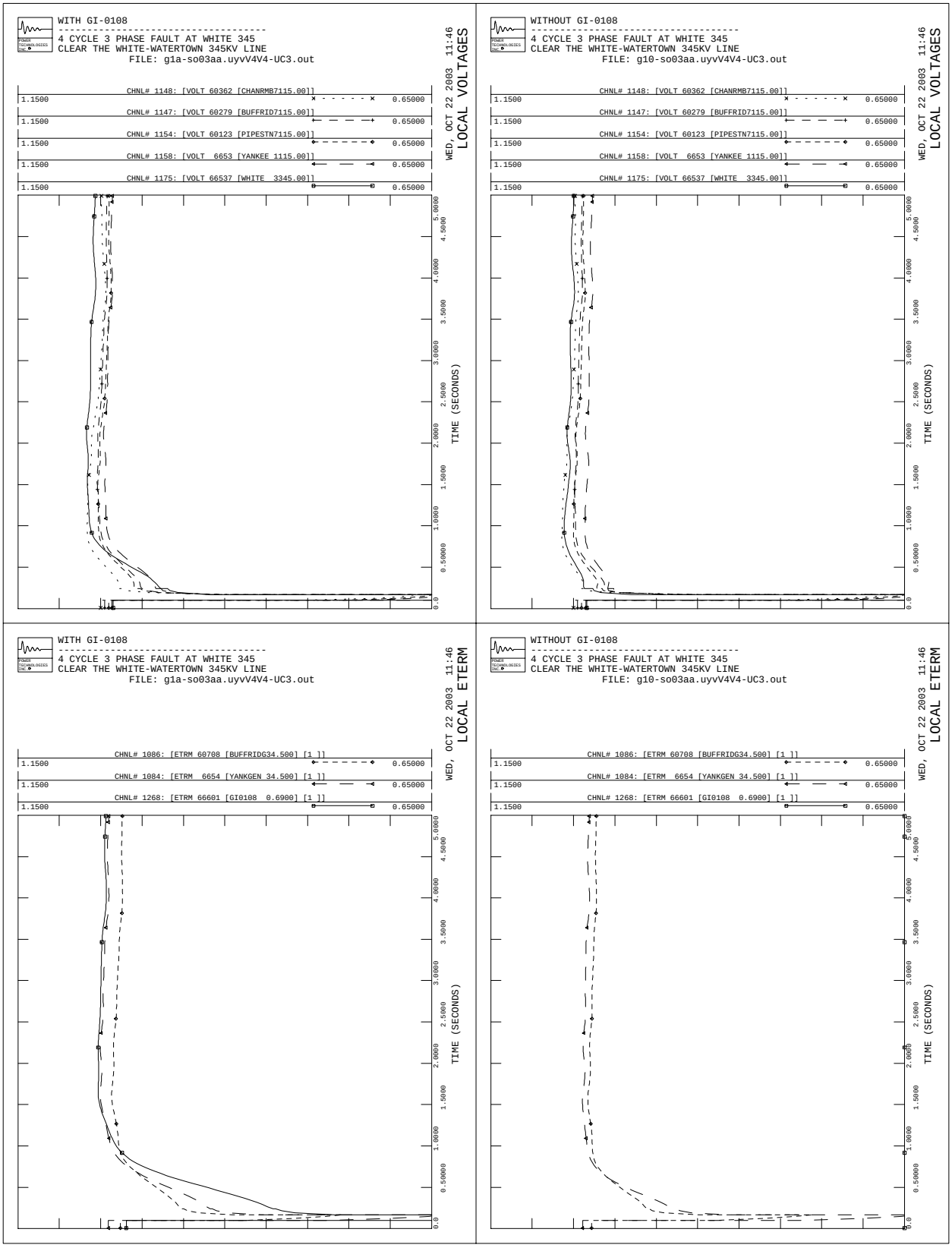

Figure 4.3: Disturbance UC3 with and without GI-0108

4.4 Summary of Stability Assessment

The proposed project has been shown to be stable for normally cleared faults near the point of interconnection. It has also been concluded that the proposed wind farm would not degrade the regional stability of the bulk power system.

It is to be noted that this study did not consider breaker failure scenarios for local area faults. It is recommended that breaker failure scenarios be studied during the facility study phase of this project.

5. SHORT-CIRCUIT ANALYSIS

5.1 Base Case Development

The baseline short-circuit model (Pre-GI-0108) required for this studies was developed as part of the Coordinated Group 1 Studies by updating the 2003 MAPP Short-Circuit Model to correspond with the network configuration in the year 2007 without GI-0108 modeled. Model development and validation of three-phase fault currents are described in the Group 1 Study Report. Due to study time and budget restrictions, validation of SLG fault currents was not performed.

After creating the Pre-GI-0108 short-circuit case, the proposed project was added to create another short-circuit case with GI-0108 modeled. Suitable assumptions were made for short-circuit data not provided in the project datasheets.

5.2 Short-Circuit Calculations

Short-circuit studies were performed to calculate the impact of the proposed project on substation fault current levels. Three-phase and single-line-to-ground (SLG) symmetrical fault current levels were calculated at all study area buses[4] both with and without the proposed project. In order to calculate fault current levels, classical fault assumptions were used with a pre-fault voltage of 1.0 pu. Table 5.1 lists fault current levels at those buses where the increase in fault current levels are 100 A or more with the addition of the proposed project.

Based on information provided by Western, a total of 7 breakers would likely need replacement prior to the interconnection of this project. A list of breakers that would likely need replacement is given in Table 5.2. The need for breaker replacement will be further reviewed and confirmed by the Transmission Owners during the Facilities Study.

As part of this interconnection study, Western performed a limited evaluation of the impact of the interconnections of the proposed White-Yankee-Buffalo Ridge 115kV and the Split Rock-Nobles 345kV lines on fault current levels at Sioux Falls and White (without GI-0108). Results indicate that the majority of the increase in the Pre-GI-0108 fault current levels at Western's Sioux Falls substation is due to the proposed XCEL transmission additions. In Table 5.1, the fault current levels shown in parentheses represent fault currents with the White – Yankee 115 kV line open at White and the Split Rock – Nobles 345 kV line open at Split Rock.

The fault current levels presented in Table 5.1 do not include the effects of fault current decay. It is to be noted that wind turbine generators comprising doubly-fed induction generator (DFIG) technology incorporate fast controls that rapidly restore the generator's terminal current to near its pre-fault level following a fault. As a result, the fault current contributions of DFIGs decay rapidly (the rate of decay is a function of the controller design) thereby affecting fault current levels at nearby substations. If the effects of DFIG current control are considered, the fault currents are expected to be smaller than those shown in Table 5.1.

[4] The study area is defined as all buses with nominal voltages of 34.5 kV and above in the following zones: 601, 603, 604, 605, 616, 618, 619, 622, 624, 625 through 629 and 652 through 656. Areas 331 (ALTW) and 635 (MEC) were also included in the study area.

Table 5.1: Fault Current Levels With and Without the GI-0108 Project

BUS #	BUS NAME	WITH GI-0108		WITHOUT GI-0108		DELTA	
		3-PH AMPS	SLG AMPS	3-PH AMPS	SLG AMPS	3-PH FLT	SLG FLT
		/I+/	/IA/	/I+/	/IA/	/I+/	/IA/
66537	[WHITE 3 345]	7994.6	6498.4	6762.2 (5953.3)	6107.5 (5605.3)	1232.4 (808.9)	390.9 (502.2)
60129	[SPLT RK7 115]	30916.0	49500.4	30274.7	48774.4	641.3	726.0
60015	[ANSON CG 115]	28499.2	38699.2	27979.6	38278.5	519.6	420.7
66529	[WATERTN3 345]	7454.7	7367.2	6961.6	7149.1	493.1	218.1
60130	[SPLTRTA3 345]	10501.3	9869.1	10021.3	9678.9	480.0	190.2
60126	[SPLT RK3 345]	11509.4	12295.1	11051.9	12061.7	457.5	233.4
66530	[WATERTN4 230]	11704.6	11426.6	11253.6	11232.4	451.0	194.2
60125	[PATHFDR7 115]	24597.4	28653.2	24190.9	28415.9	406.5	237.3
60122	[LAWRENC7 115]	25148.6	28366.3	24743.9	28140.2	404.7	226.1
66538	[WHITE 7 115]	10022.5	11339.2	9650.7	11122.8	371.8	216.4
60131	[SPLTRTB3 345]	10596.0	9419.7	10236.1	9293.0	359.9	126.7
66524	[SIOUXFL7 115]	22530.4	24850.4	22220.6 (20554.9)	24685.2 (23261.7)	309.8 (1665.7)	165.2 (1423.5)
66531	[WATERTN7 115]	11841.7	13607.3	11615.4	13474.1	226.3	133.2
60286	[NOBLES 3 345]	9109.1	7225.4	8903.5	7169.3	205.6	56.1
6001	[YANKEE 1 115]	7836.5	6560.5	7665.5	6507.2	171.0	53.3
66504	[BROOKNG7 115]	7143.7	5181.4	7009.7	5150.2	134.0	31.2
60287	[NOBLES 7 115]	13027.7	11503.4	12894.0	11457.7	133.7	45.7
66512	[GROTON 7 115]	10480.0	8104.0	10355.7	8071.1	124.3	32.9
60708	[BUFFRIDG34.5]	28960.8	37965.5	28838.9	37874.7	121.9	90.8
66523	[SIOUXFL4 230]	11533.5	12316.4	11418.9 (10822.3)	12258.0 (11783.6)	114.6 (596.6)	58.4 (474.4)
60127	[SPLT RK4 230]	11258.3	12172.4	11146.5	12113.8	111.8	58.6

Note:
The fault current levels shown in parentheses represent fault currents with the White – Yankee 115 kV line open at White and the Split Rock – Nobles 345 kV line open at Split Rock. Delta values in parentheses are fault current increases due to XCEL facility connections (White – Yankee 115 kV line and Split Rock – Nobles 345 kV line) compared to the Pre-GI-0108 case.

Table 5.2: List of Substations Where Breaker Replacements are Likely Needed

Substation	No. of Breakers to be Replaced
WAPA	
Sioux Falls 115 kV	4
Sioux Falls 230 kV	3

6. CONCLUSIONS

The impact of adding 200 MW of wind generation at White 345 kV station was evaluated. The evaluation involved assessment of system performance under steady state, transient and dynamic conditions.

Based on the technical evaluation, the following conclusions can be drawn:

Steady-State Analysis:
The interconnection of this wind farm resulted in a number of thermal overloads in the electrical system. These overloads were grouped into three categories. The first category consisted of all new overloads. The second category consisted of all pre-existing overloads that increased loading by ten percent or more and the third category consisted of all pre-existing overloads that increased loading by less than ten percent. Further distinction was drawn between the overloads related to the generation interconnection and the delivery of power from this generator. This study has focused on the overloads caused by the generation interconnection only. These overloads are generally localized in the vicinity of the point of interconnection. The study shows that there would be no new thermal overloads associated with the interconnection of this wind farm. Table 3.8 lists other thermal overloads that could potentially become system limiters for the delivery of power from this generator.

N-2 contingency analysis was performed determine whether there are any new transmission system thermal overloads following simultaneous outages of any two transmission system branches in the vicinity of the proposed project. Results of the N-2 contingency analysis indicate that there are several new overloads attributable to the proposed project. Based on information provided by Western, operating restrictions for the new generating unit will be needed during prior outage conditions to maintain acceptable area facility loadings and voltages. These operating restrictions will be identified during the operating studies, if the transmission customer proceeds with the interconnection request.

Transfer Capability Analysis:
The impact of this project on First Contingency Incremental Transfer Capabilities (FCITCs) for transfers between specific sources and sinks was evaluated. The study found that the proposed project may incrementally impact the transfer capability of the NDEX interface based upon the delivery of power from the project to the Twin Cities area. The study also evaluated the impact of the proposed project on constrained interfaces in the MAPP system and found that the Power Transfer Distribution Factor (PTDF) exceeds the maximum allowable threshold of 5% for the FTCAL_S interface. These distribution factors are provided for information only to identify potential third party flowgate issues for the requested delivery component of the transmission. As new interfaces are regularly added to the MAPP process, this listing may not include any recently added flowgates.

Stability Analysis:
The impact of this wind farm on local area transient stability was evaluated. The study found that the wind farm would be stable for transmission system faults at and near the wind farm. Also, the study found that the transient stability of other generators in the vicinity would not be adversely affected by the addition of this wind farm.

The Minnesota area is known to be stability constrained due to heavy import of power from coal mines in North Dakota and hydro generation in Manitoba. Various stability constraints such as North Dakota Export (NDEX) and Manitoba Hydro Export (MHEX) have been

identified and are monitored on a regular basis. This study has evaluated the impact of this wind farm on the regional stability of the system. The study found that a fault at Chisago County (faults njz and nmz) led to voltage depression in Panther, McLeod and Willmar area. These voltage depressions were found to be within acceptable reliability criteria. Therefore the study concluded that the regional stability of the system is not adversely affected by the addition of this wind farm.

Short-Circuit Analysis:
Short-circuit analysis was performed to evaluate the impact of the proposed project on transmission system substation fault current levels. The purpose of this analysis was to determine whether the existing breakers at these substations would have adequate fault current interruption capability with the proposed project in service. Based on information provided by Western, a total of 7 breakers would likely need replacement prior to the interconnection of this project. A list of breakers that would likely need replacement is given in Table 5.2. The need for breaker replacement will be further reviewed and confirmed by the Transmission Owners during the Facilities Study.

As part of this interconnection study, Western performed a limited evaluation of the impact of the interconnections of the proposed White-Yankee-Buffalo Ridge 115kV and the Split Rock-Nobles 345kV lines on fault current levels at Sioux Falls and White (without GI-0108). Results indicate that the majority of the increase in the Pre-GI-0108 fault current levels at Western's Sioux Falls substation is due to the proposed XCEL transmission additions.

Need for 825 MW Transmission Upgrade by XCEL:
This study assumes that XCEL has built all the transmission facility upgrades related to 825 MW of wind transmission delivery capability from the Buffalo Ridge area to the Twin Cities. A list of transmission upgrades including the XCEL 825 MW wind transmission has been provided in Appendix A "Base Case Development". The XCEL 825 MW upgrades are scheduled to be completed by 2007. If this project intends to go into service before the XCEL transmission upgrades have been built, a sensitivity analysis must be performed to determine which of the XCEL transmission upgrades are needed for a reliable interconnection and operation of this new generator. For the GI-0108 request, some sensitivity analysis has already been completed in the "Sensitivity Analysis for White-Buffalo Ridge 115kV line, Western/MISO Coordinated Buffalo Ridge Group Study, IS Interconnection Request TI-0301" that identifies the incremental impact of the White-Buffalo Ridge 115kV line addition to this project. However, the base case models for the evaluation of the GI-0108 request did assume that the other proposed XCEL transmission facilities would be in-service.

APPENDICES